STL33N65M2

N-channel 650 V, 0.124 Ω typ., 20 A MDmesh™ M2 Power MOSFET in a PowerFLAT™ 8x8 HV package

Datasheet - production data

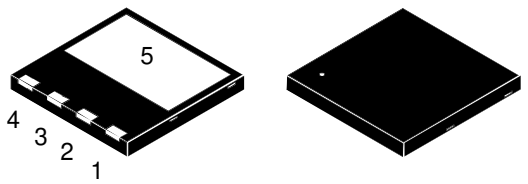

PowerFLAT™ 8x8 HV

Figure 1: Internal schematic diagram

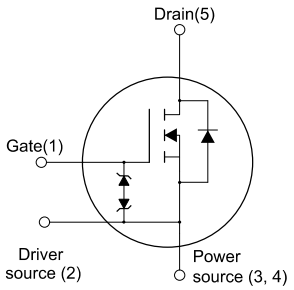

Features

Order code	V_{DS}	$R_{DS(on)}$max	I_D
STL33N65M2	650 V	0.154 Ω	20 A

- Extremely low gate charge
- Excellent output capacitance (C_{OSS}) profile
- 100% avalanche tested
- Zener-protected

Applications

- Switching applications

Description

This device is an N-channel Power MOSFET developed using MDmesh™ M2 technology. Thanks to its strip layout and an improved vertical structure, the device exhibits low on-resistance and optimized switching characteristics, rendering it suitable for the most demanding high efficiency converters.

Table 1: Device summary

Order code	Marking	Package	Packing
STL33N65M2	33N65M2	PowerFLAT™ 8x8 HV	Tape and reel

This is information on a product in full production. www.st.com

Contents

1 Electrical ratings 3

2 Electrical characteristics 4

2.1 Electrical characteristics (curves) 6

3 Test circuits 8

4 Package information 9

4.1 PowerFLAT™ 8x8 HV package information 10

4.2 PowerFLAT™ 8x8 HV packing information 12

5 Revision history 14

1 Electrical ratings

Table 2: Absolute maximum ratings

Symbol	Parameter	Value	Unit
V_{GS}	Gate-source voltage	± 25	V
I_D	Drain current (continuous) at T_C = 25 °C	20	A
I_D	Drain current (continuous) at T_C = 100 °C	12.6	A
I_{DM} (1)	Drain current (pulsed)	80	A
P_{TOT}	Total dissipation at T_C = 25 °C	150	W
dv/dt (2)	Peak diode recovery voltage slope	15	V/ns
dv/dt (3)	MOSFET dv/dt ruggedness	50	V/ns
T_{stg}	Storage temperature range	- 55 to 150	°C
T_j	Operating junction temperature range		°C

Notes:

(1)Pulse width limited by safe operating area.

(2)I_{SD} ≤ 20 A, di/dt ≤ 400 A/µs, $V_{DS(peak)} < V_{(BR)DSS}$, V_{DD} = 400 V.

(3)V_{DS} ≤ 520 V.

Table 3: Thermal data

Symbol	Parameter	Value	Unit
$R_{thj-case}$	Thermal resistance junction-case max	0.83	°C/W
$R_{thj-pcb}$ (1)	Thermal resistance junction-pcb max	45	°C/W

Notes:

(1)When mounted on FR-4 board of inch², 2oz Cu.

Table 4: Avalanche characteristics

Symbol	Parameter	Value	Unit
I_{AR}	Avalanche current, repetitive or notrepetitive (pulse width limited by T_{jmax})	2.2	A
E_{AS}	Single pulse avalanche energy (starting T_j = 25 °C, I_D = I_{AR}, V_{DD} = 50 V)	600	mJ

2 Electrical characteristics

(T_C = 25 °C unless otherwise specified)

Table 5: On /off states

Symbol	Parameter	Test conditions	Min.	Typ.	Max.	Unit
$V_{(BR)DSS}$	Drain-source breakdown voltage	V_{GS} = 0 V, I_D = 1 mA	650			V
I_{DSS}	Zero gate voltage drain current	V_{GS} = 0 V, V_{DS} = 650 V			1	µA
		V_{GS} = 0 V, V_{DS} = 650 V, T_C=125 °C (1)			100	µA
I_{GSS}	Gate-body leakage current	V_{DS} = 0 V, V_{GS} = ± 25 V			±10	µA
$V_{GS(th)}$	Gate threshold voltage	V_{DS} = V_{GS}, I_D = 250 µA	2	3	4	V
$R_{DS(on)}$	Static drain-source on- resistance	V_{GS} = 10 V, I_D = 10 A		0.124	0.154	Ω

Notes:

(1)Defined by design, not subject to production test.

Table 6: Dynamic

Symbol	Parameter	Test conditions	Min.	Typ.	Max.	Unit
C_{iss}	Input capacitance	V_{DS} = 100 V, f = 1 MHz, V_{GS} = 0	-	1790	-	pF
C_{oss}	Output capacitance		-	75	-	pF
C_{rss}	Reverse transfer capacitance		-	2	-	pF
$C_{oss\ eq.}$ (1)	Equivalent output capacitance	V_{DS} = 0 to 520 V, V_{GS} = 0	-	380	-	pF
Q_g	Total gate charge	V_{DD} = 520 V, I_D = 24 A V_{GS} = 10 V (see *Figure 15: "Gate charge test circuit"*)	-	41.5	-	nC
Q_{gs}	Gate-source charge		-	6.8	-	nC
Q_{gd}	Gate-drain charge		-	18	-	nC

Notes:

(1)Coss eq. is defined as a constant equivalent capacitance giving the same charging time as Coss when VDS increases from 0 to 80% V_{DSS}.

Table 7: Switching times

Symbol	Parameter	Test conditions	Min.	Typ.	Max.	Unit
$t_{d(on)}$	Turn-on delay time	V_{DD} = 325 V, I_D = 12 A R_G = 4.7 Ω, V_{GS} = 10 V (see *Figure 14: "Switching times test circuit for resistive load"* and *Figure 19: "Switching time waveform"*)	-	13.5	-	ns
t_r	Voltage rise time		-	11.5	-	ns
$t_{d(off)}$	Turn-off delay time		-	72.5	-	ns
t_f	Current fall time		-	11.5	-	ns

Table 8: Source drain diode

Symbol	Parameter	Test conditions	Min.	Typ.	Max.	Unit
I_{SD}	Source-drain current		-		20	A
I_{SDM} (1)	Source-drain current (pulsed)		-		80	A
V_{SD} (2)	Forward on voltage	I_{SD} = 24 A, V_{GS} = 0 V	-		1.6	V
t_{rr}	Reverse recovery time	I_{SD} = 24 A, di/dt = 100 A/µs V_{DD} = 60 V (see *Figure 16: " Test circuit for inductive load switching and diode recovery times"*)	-	426		ns
Q_{rr}	Reverse recovery charge		-	7		µC
I_{RRM}	Reverse recovery current		-	33.5		A
t_{rr}	Reverse recovery time	I_{SD} = 24 A, di/dt = 100 A/µs V_{DD} = 60 V, T_j = 150 °C (see *Figure 16: " Test circuit for inductive load switching and diode recovery times"*)	-	544		ns
Q_{rr}	Reverse recovery charge		-	10		µC
I_{RRM}	Reverse recovery current		-	36.5		A

Notes:

(1)Pulse width limited by safe operating area.

(2)Pulsed: pulse duration = 300 µs, duty cycle 1.5%.

2.1 Electrical characteristics (curves)

Figure 2: Safe operating area

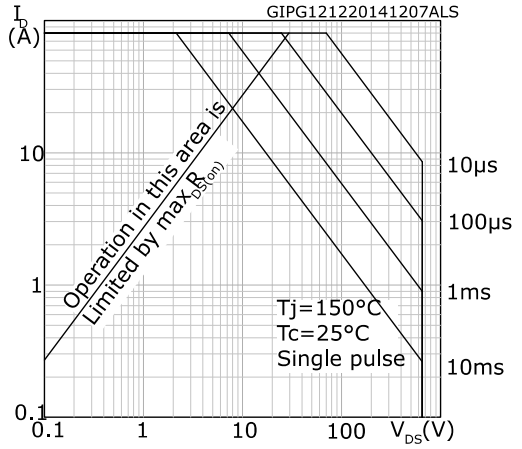

Figure 3: Thermal impedance

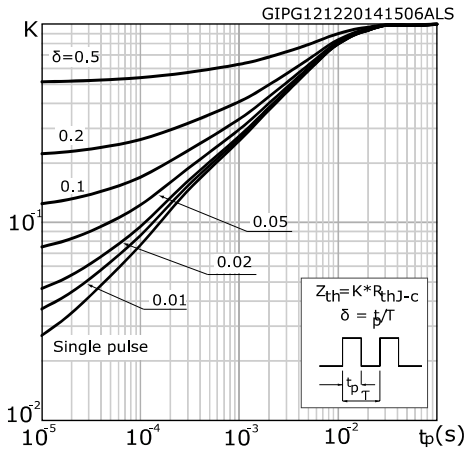

Figure 4: Output characteristics

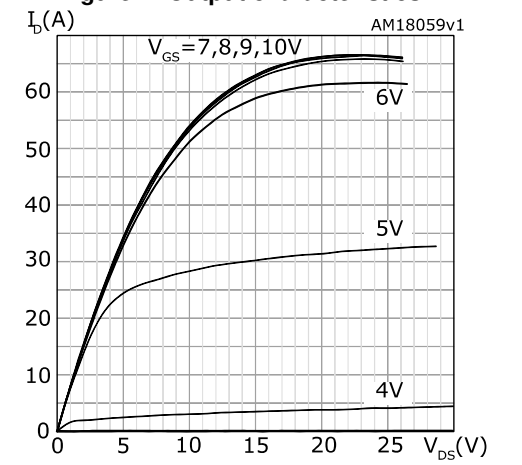

Figure 5: Transfer characteristics

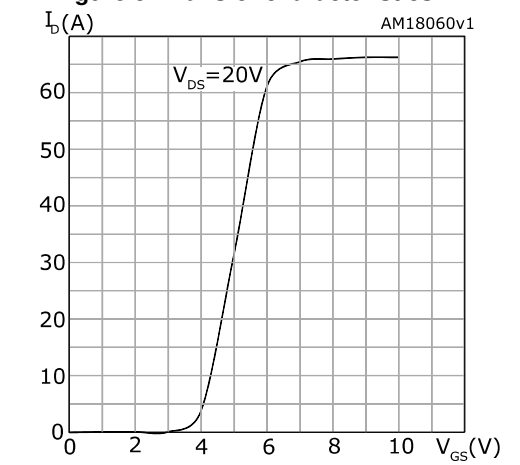

Figure 6: Gate charge vs gate-source voltage

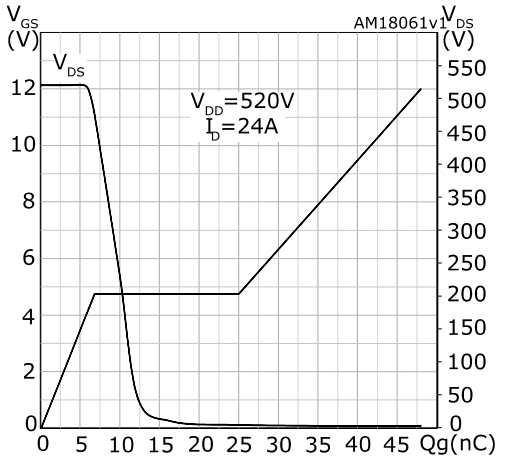

Figure 7: Static drain-source on-resistance

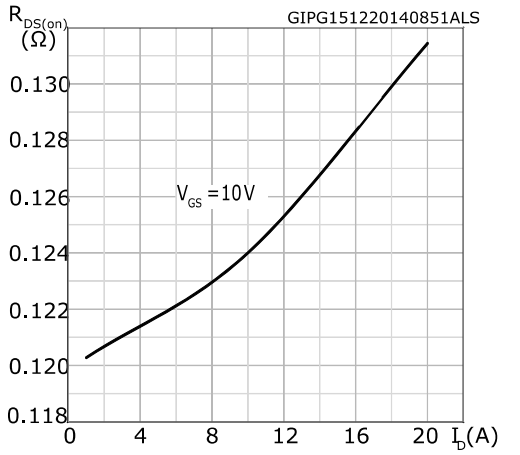

Figure 8: Capacitance variations

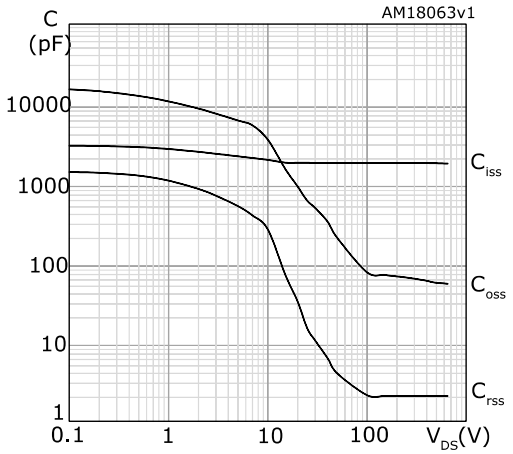

Figure 9: Output capacitance stored energy

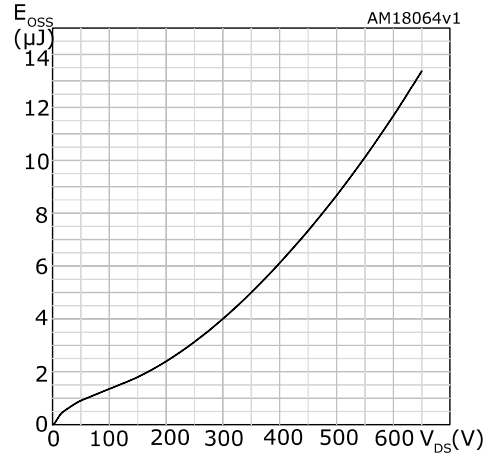

Figure 10: Normalized gate threshold voltage vs temperature

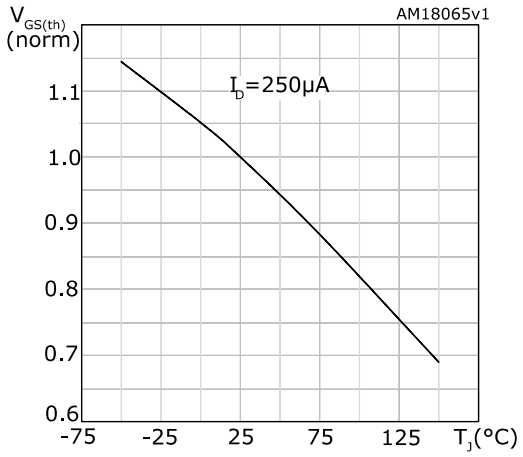

Figure 11: Normalized on-resistance vs temperature

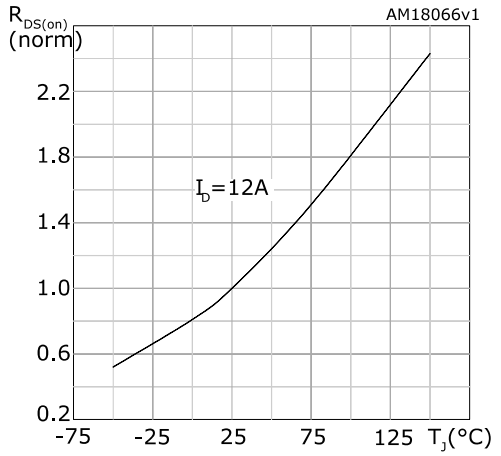

Figure 12: Source-drain diode forward characteristics

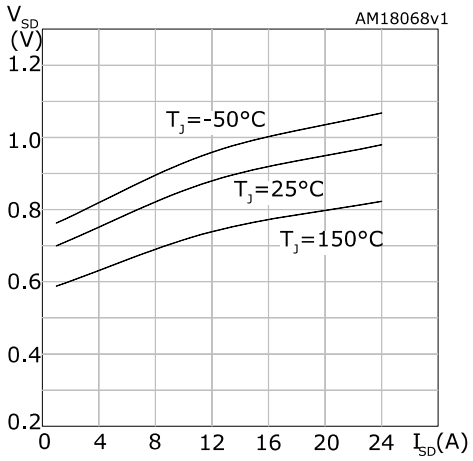

Figure 13: Normalized $V_{(BR)DSS}$ vs temperature

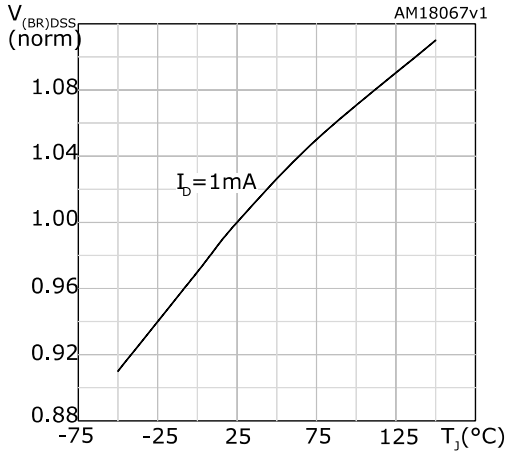

3 Test circuits

Figure 14: Switching times test circuit for resistive load

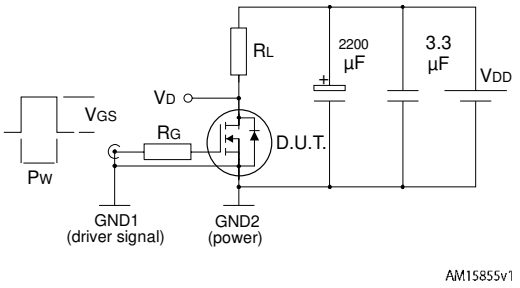

Figure 15: Gate charge test circuit

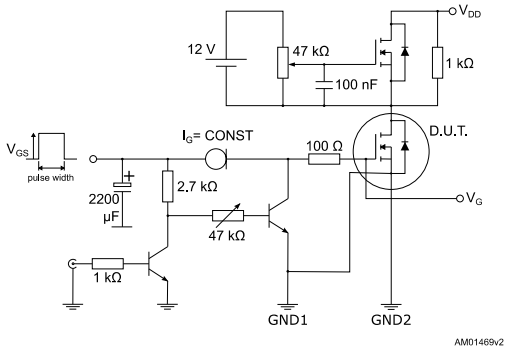

Figure 16: Test circuit for inductive load switching and diode recovery times

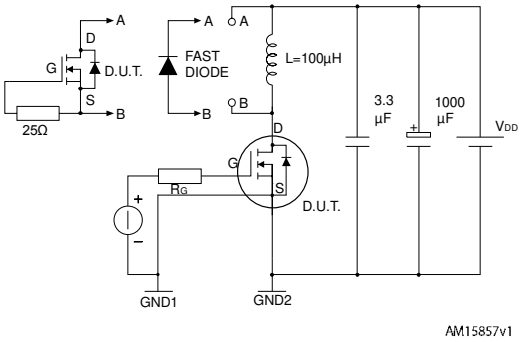

Figure 17: Unclamped inductive load test circuit

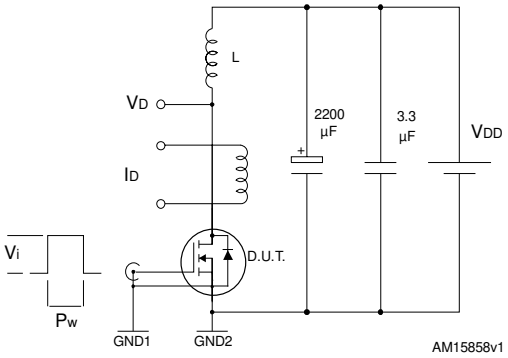

Figure 18: Unclamped inductive waveform

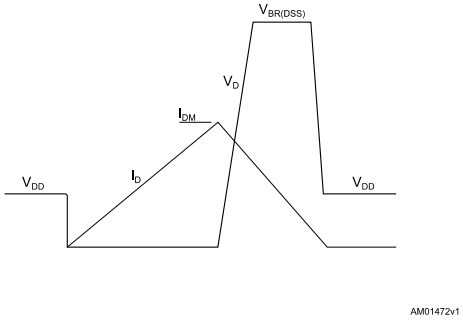

Figure 19: Switching time waveform

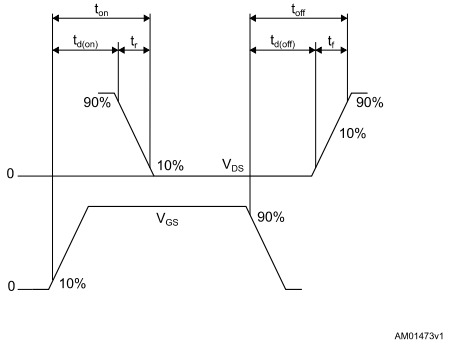

4 Package information

In order to meet environmental requirements, ST offers these devices in different grades of ECOPACK® packages, depending on their level of environmental compliance. ECOPACK® specifications, grade definitions and product status are available at: ***www.st.com***. ECOPACK® is an ST trademark.

4.1 PowerFLAT™ 8x8 HV package information

Figure 20: PowerFLAT™ 8x8 HV package outline

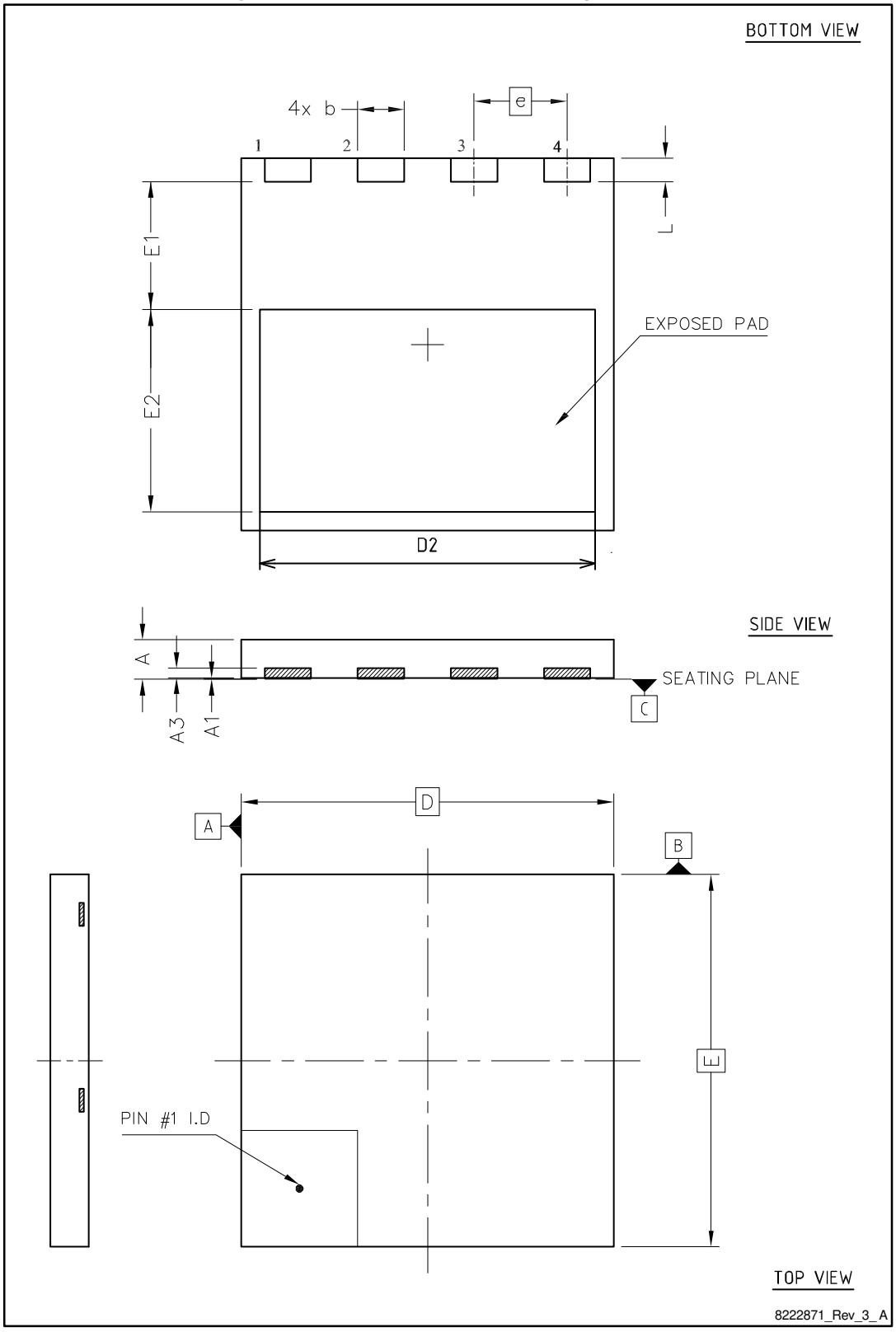

Table 9: PowerFLAT™ 8x8 HV mechanical data

Dim.	mm		
	Min.	Typ.	Max.
A	0.75	0.85	0.95
A1	0.00		0.05
A3	0.10	0.20	0.30
b	0.90	1.00	1.10
D	7.90	8.00	8.10
E	7.90	8.00	8.10
D2	7.10	7.20	7.30
E1	2.65	2.75	2.85
E2	4.25	4.35	4.45
e		2.00	
L	0.40	0.50	0.60

Figure 21: PowerFLAT™ 8x8 HV footprint

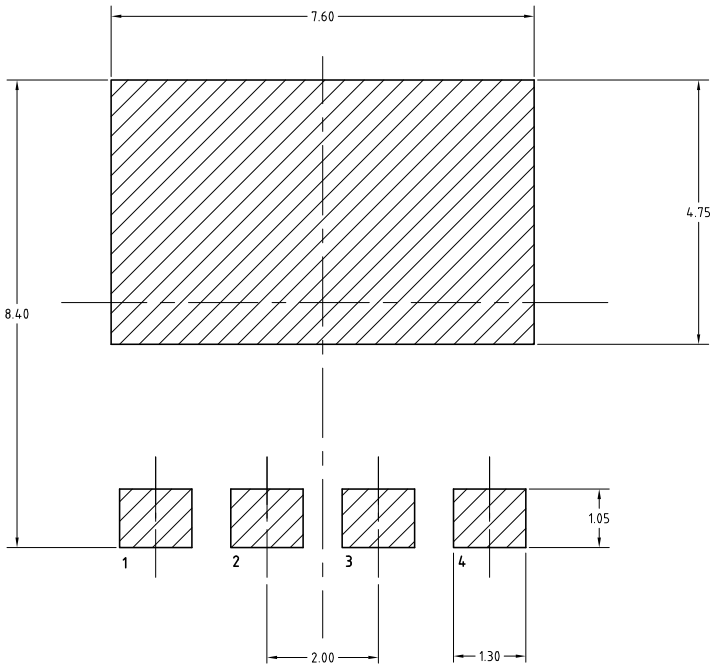

All dimensions are in millimeters.

4.2 PowerFLAT™ 8x8 HV packing information

Figure 22: PowerFLAT™ 8x8 HV tape

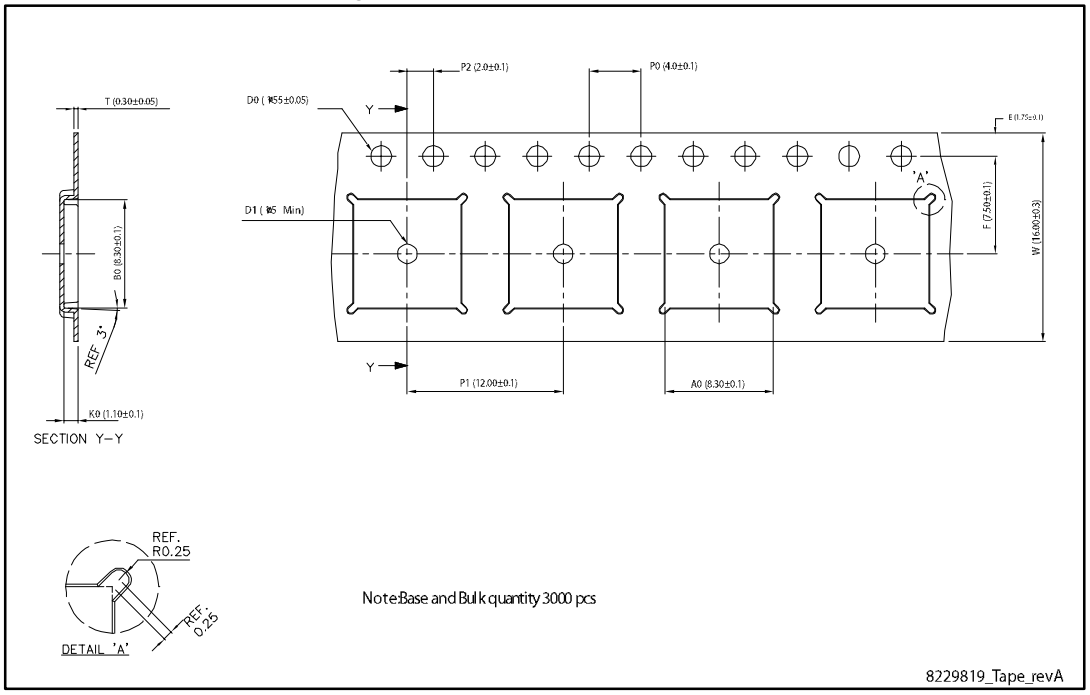

All dimensions are in millimeters.

Figure 23: PowerFLAT™ 8x8 HV package orientation in carrier tape

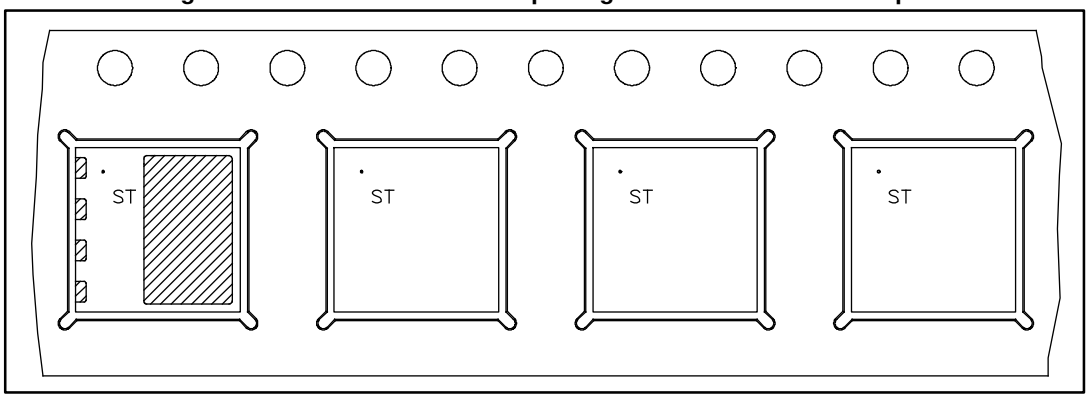

Figure 24: PowerFLAT™ 8x8 HV reel

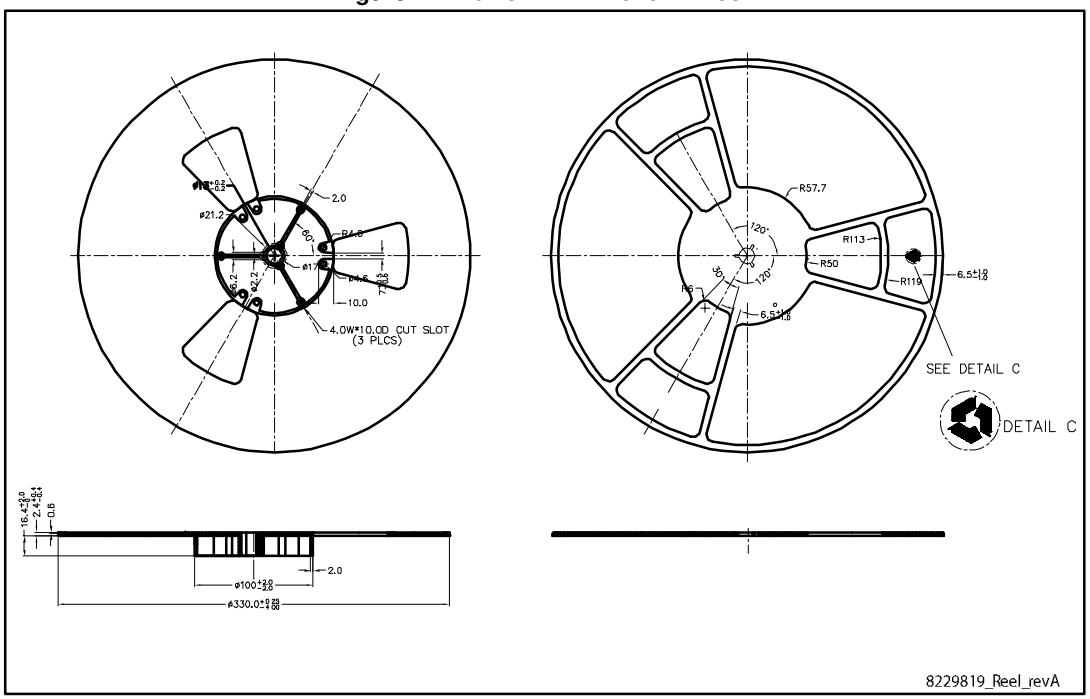

All dimensions are in millimeters.

5 Revision history

Table 10: Document revision history

Date	Revision	Changes
26-Jun-2013	1	First release.
23-Jul-2014	2	Text edits throughout document. On cover page, updated title, features and description. Updated Table 2: Absolute maximum ratings. Updated Table 3: Thermal data. Added Table 4: Avalanche characteristics. Updated Table 5: On /off states. Updated Table 6: Dynamic. Updated Table 7: Switching times. Updated Table 8: Source drain diode.
13-Apr-2016	3	Updated cover image and *Figure 1: "Internal schematic diagram"*. Updated *Section 3: "Test circuits"*. Added footnote in *Table 5: "On /off states"*. Removed footnote in *Table 8: "Source drain diode"*. Updated *Section 4: "Package information"*. Minor text changes.

IMPORTANT NOTICE – PLEASE READ CAREFULLY

STMicroelectronics NV and its subsidiaries (“ST”) reserve the right to make changes, corrections, enhancements, modifications, and improvements to ST products and/or to this document at any time without notice. Purchasers should obtain the latest relevant information on ST products before placing orders. ST products are sold pursuant to ST’s terms and conditions of sale in place at the time of order acknowledgement.

Purchasers are solely responsible for the choice, selection, and use of ST products and ST assumes no liability for application assistance or the design of Purchasers’ products.

No license, express or implied, to any intellectual property right is granted by ST herein.

Resale of ST products with provisions different from the information set forth herein shall void any warranty granted by ST for such product.

ST and the ST logo are trademarks of ST. All other product or service names are the property of their respective owners.

Information in this document supersedes and replaces information previously supplied in any prior versions of this document.

© 2016 STMicroelectronics – All rights reserved