BALF-NRG-01D3

50 ohm nominal input / conjugate match balun balun to BlueNRG tranceiver, with integrated harmonic filter

Datasheet - production data

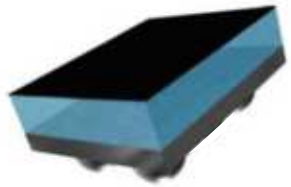

Flip-Chip (4 bumps) package

Features

- 50 Ω nominal input / conjugate match to BlueNRG device
- Low insertion loss
- Low amplitude imbalance
- Low phase imbalance
- Wafer level chip scale package (WLCSP)

Benefits

- Very low profile < 670 µm
- High RF performance
- RF BOM reduction
- Small footprint

Applications

- Bluetooth low energy impedance matched balun filter
- Optimized for ST BlueNRG RFIC

Description

STMicroelectronics BALF-NRG-01D3 is an ultra miniature balun. The BALF-NRG-01D3 integrates matching network and harmonics filter. Matching impedance has been customized for the BlueNRG ST transceiver (both QFN and WLCSP versions). It is using STMicroelectronics IPD technology on non conductive glass substrate which optimizes RF performance.

Figure 1: Application schematic with QFN type BlueNRG

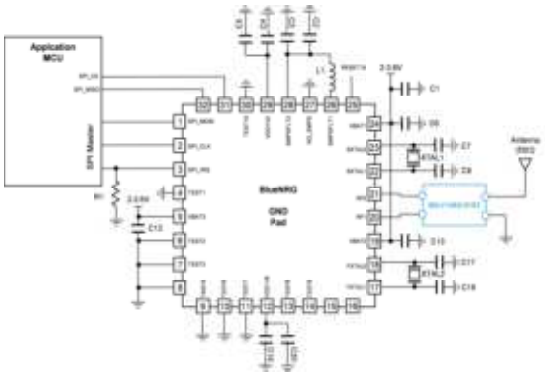

Figure 2: Application schematic with WLCSP type BlueNRG

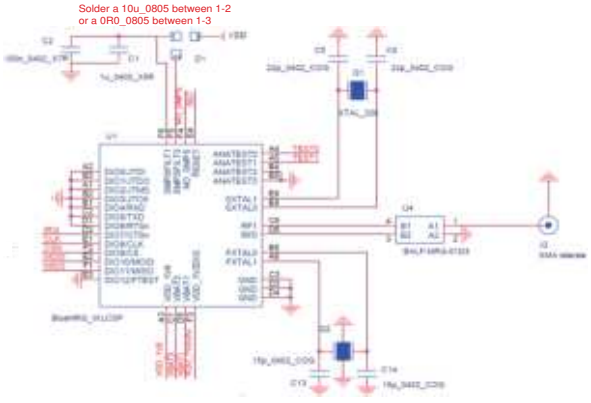

This is information on a product in full production.

www.st.com

1 Characteristics

Table 1: Absolute maximum ratings (limiting values)

Symbol	Parameter	Value			Unit
		Min.	Typ.	Max.	
P_{IN}	Input power RFIN		-	20	dBm
V_{ESD}	ESD ratings MIL STD883C (HBM: C = 100 pF, R = 1.5 Ω, air discharge)	2000	-		V
	ESD ratings machine model (MM: C = 200 pF, R = 25 W, L = 500 nH)	200	-		
T_{OP}	Operating temperature	-40	-	+105	°C

Table 2: Impedances (T_{amb} = 25 °C)

Symbol	Parameter	Value			Unit
		Min.	Typ.	Max.	
Z_{OUT}	Nominal differential output impedance	-	Match to BlueNRG	-	Ω
Z_{IN}	Nominal input impedance	-	50	-	Ω

Table 3: RF performance (T_{amb} = 25 °C)

Symbol	Parameter	Test condition	Value			Unit
			Min.	Typ.	Max.	
f	Frequency range (bandwidth)		2400		2500	MHz
S_{11}	Input return loss bandwidth			-20		dB
S_{21}	Insertion loss			-1.1		dB
S_{21}	Harmonic rejection (differential mode)	H2		-8		dB
		H3		-38		
		H4		-31		
		H5		-23		
ϕ_{imb}	Output phase imbalance			7		°
A_{imb}	Output amplitude imbalance			0.5		dB

1.1 RF measurement

Figure 3: Differential transmission

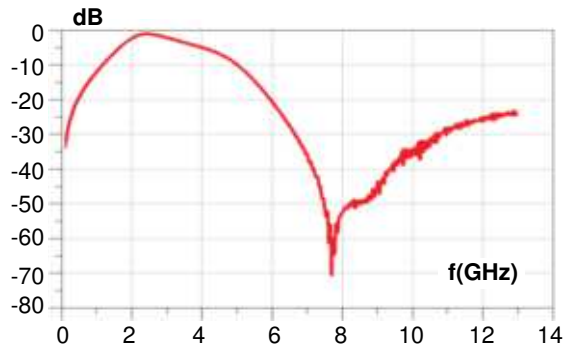

Figure 4: Return loss

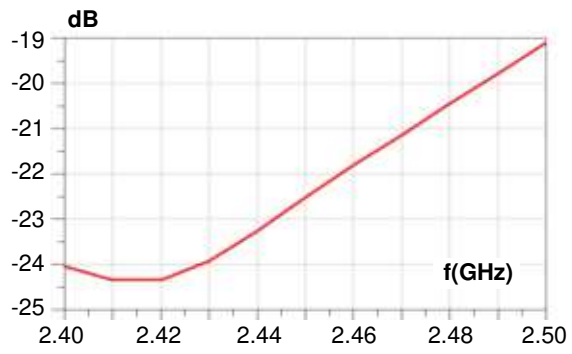

Figure 5: Insertion loss

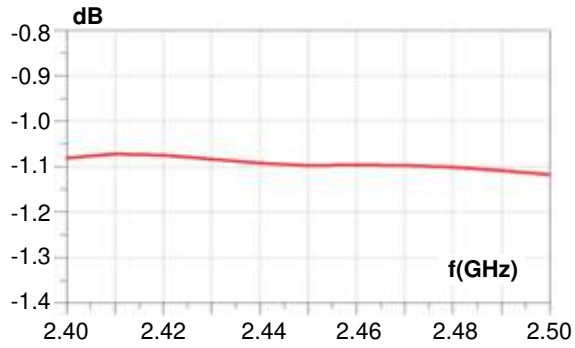

Figure 6: H2 filtering

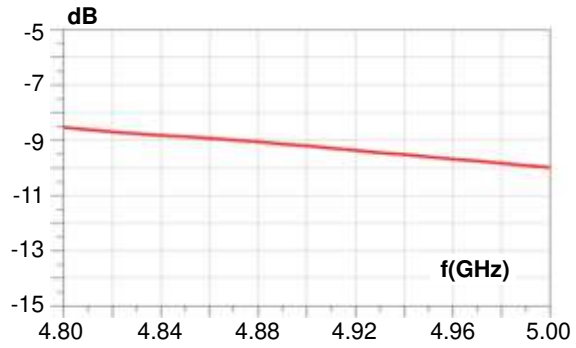

Figure 7: H3 filtering

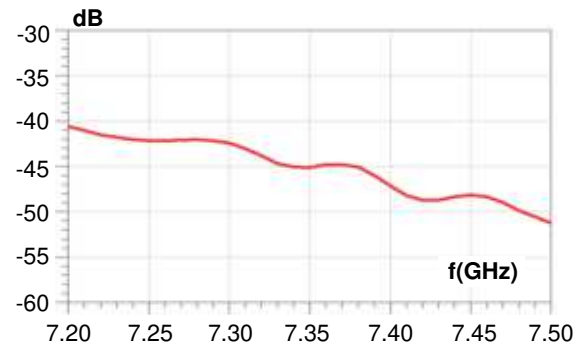

Figure 8: H4 filtering

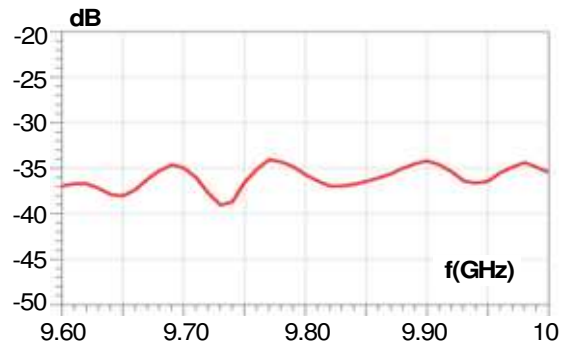

Figure 9: H5 filtering

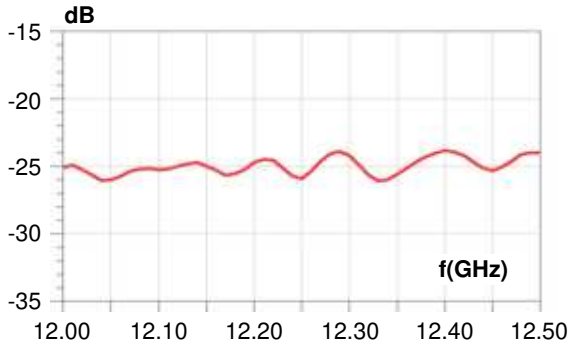

Figure 10: Amplitude imbalance

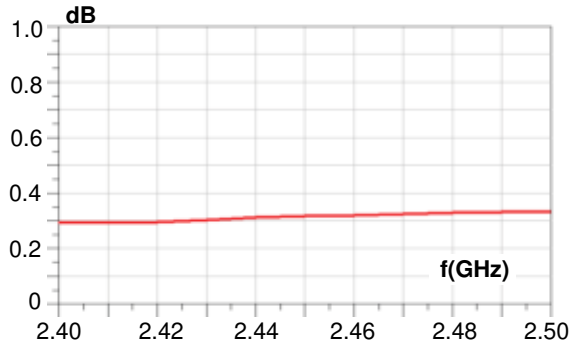

Figure 11: Phase imbalance

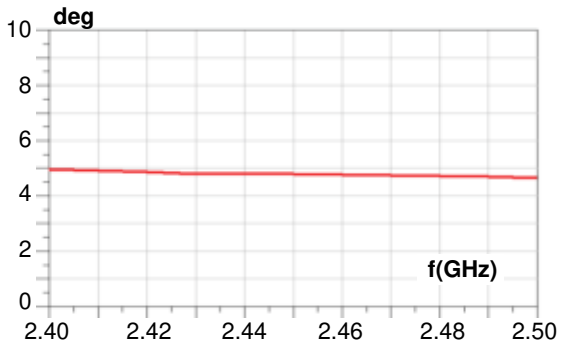

2 BALF-NRG-01D3 with QFN type BlueNRG

Figure 12: Application board EVB (2 layers)

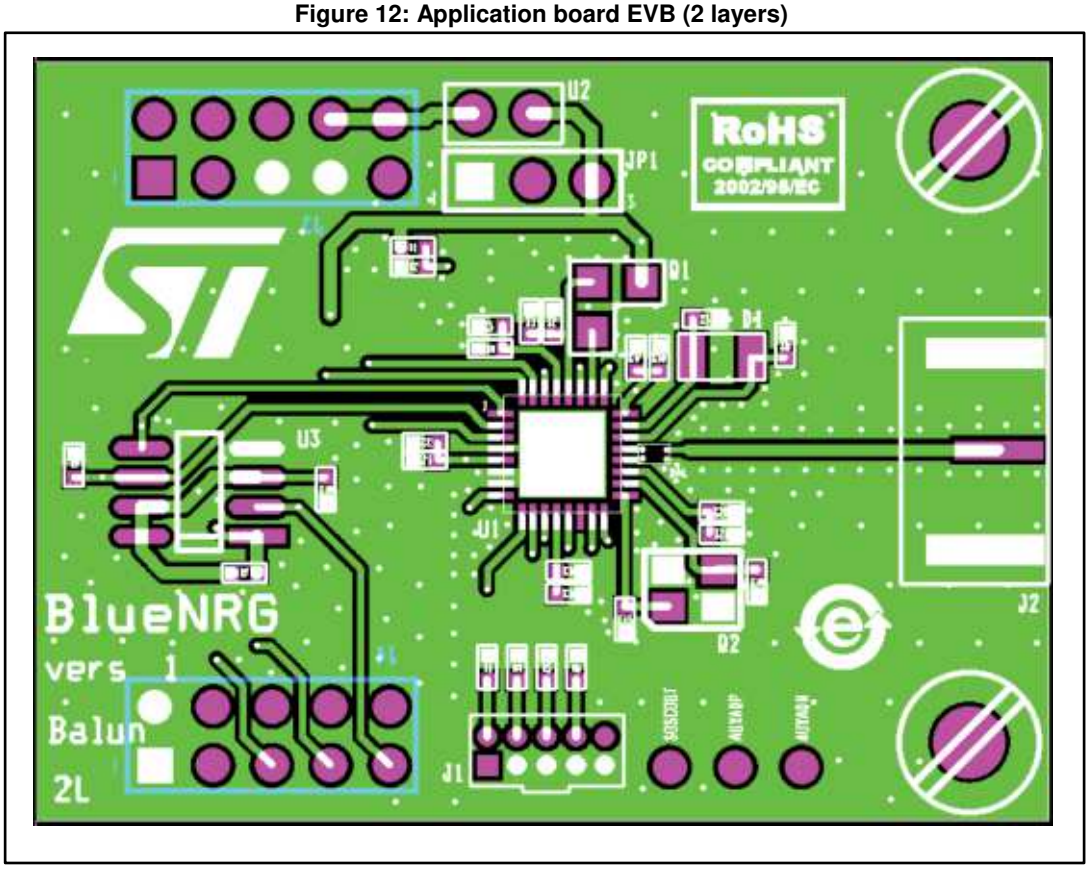

Figure 13: Recommended balun land pattern (EVB)

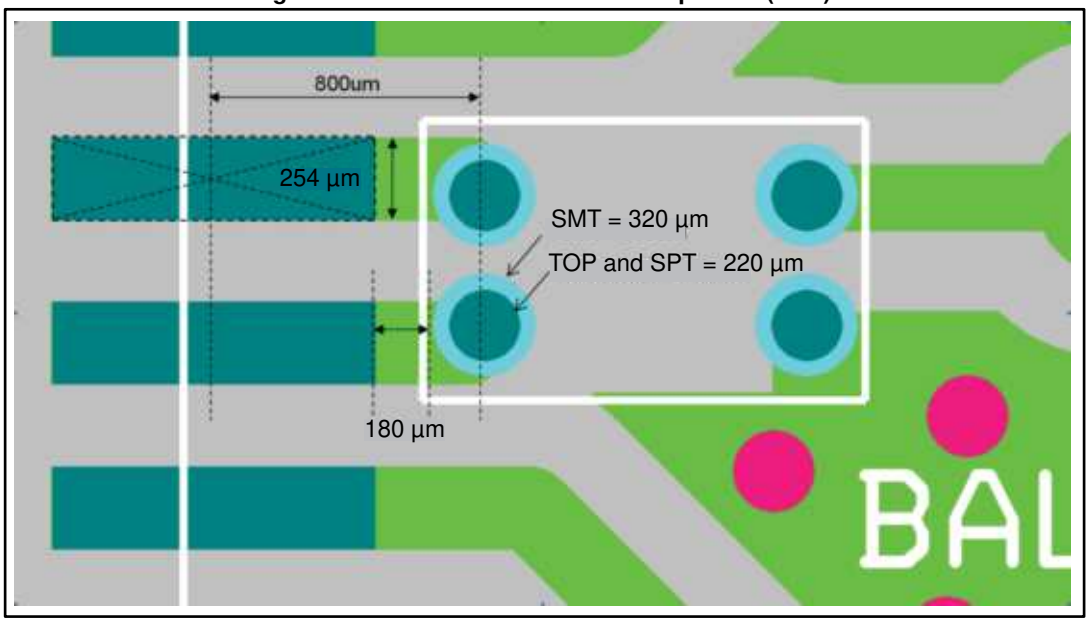

2.1 BALF-NRG-01D3 measurements on QFN EVB

Figure 14: Harmonics

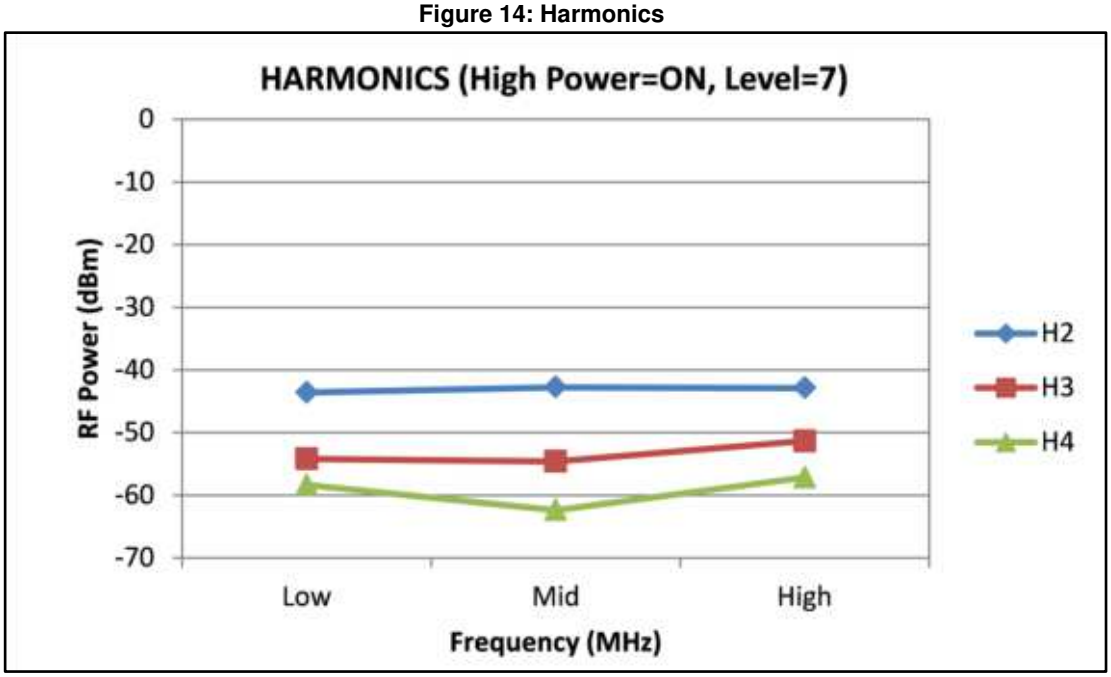

Figure 15: Sensitivity

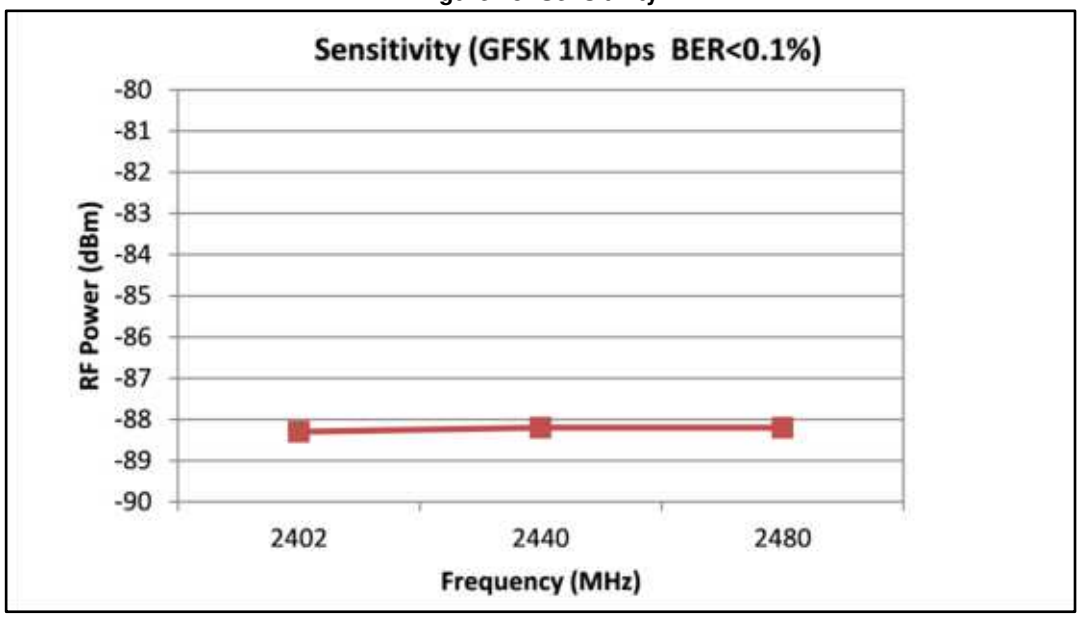

Figure 16: P_{out}

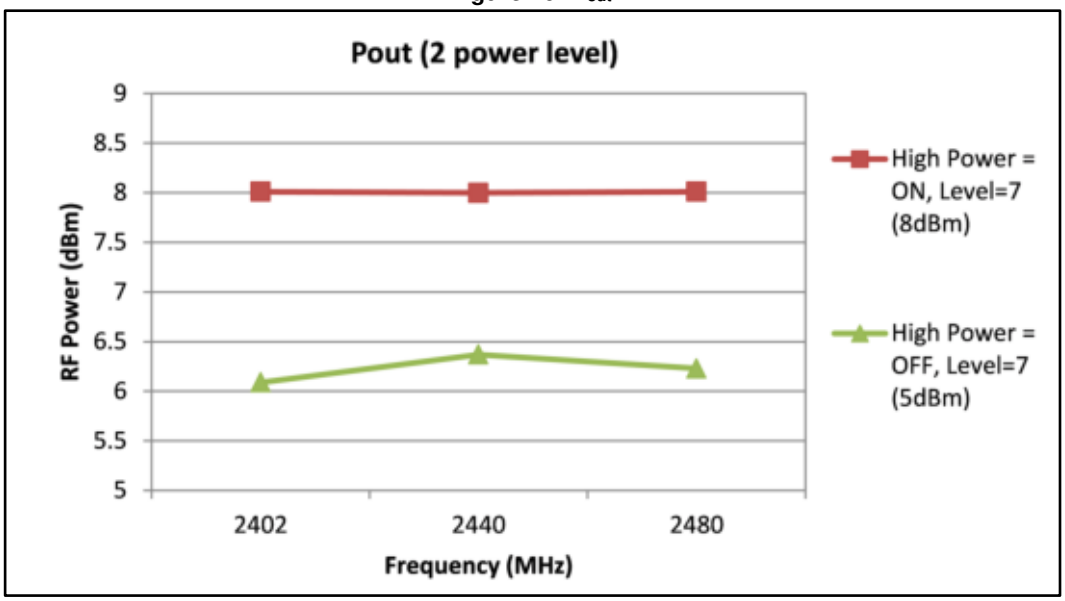

3 BALF-NRG-01D3 with WLCSP type BlueNRG

Figure 17: Recommended balun land pattern (WLCSP)

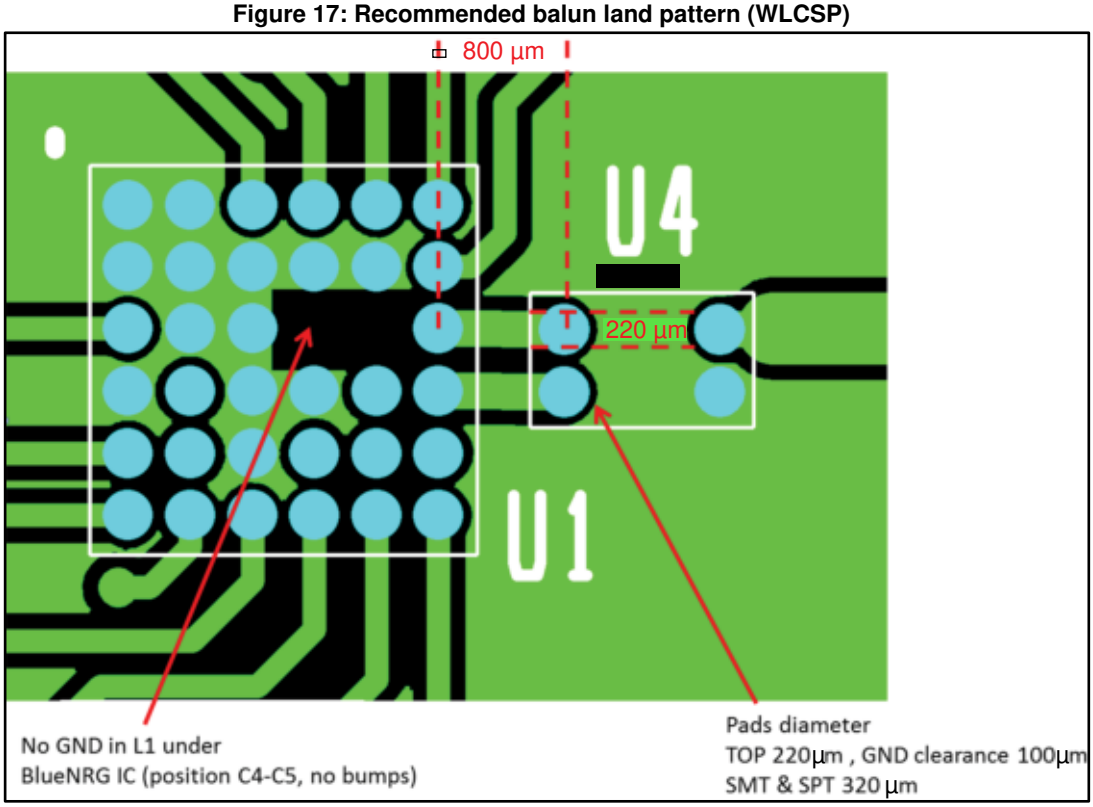

Figure 18: PCB stack-up recommendation



3.1 BALF-NRG-01D3 measurements on WLCSP EVB

Figure 19: Harmonics

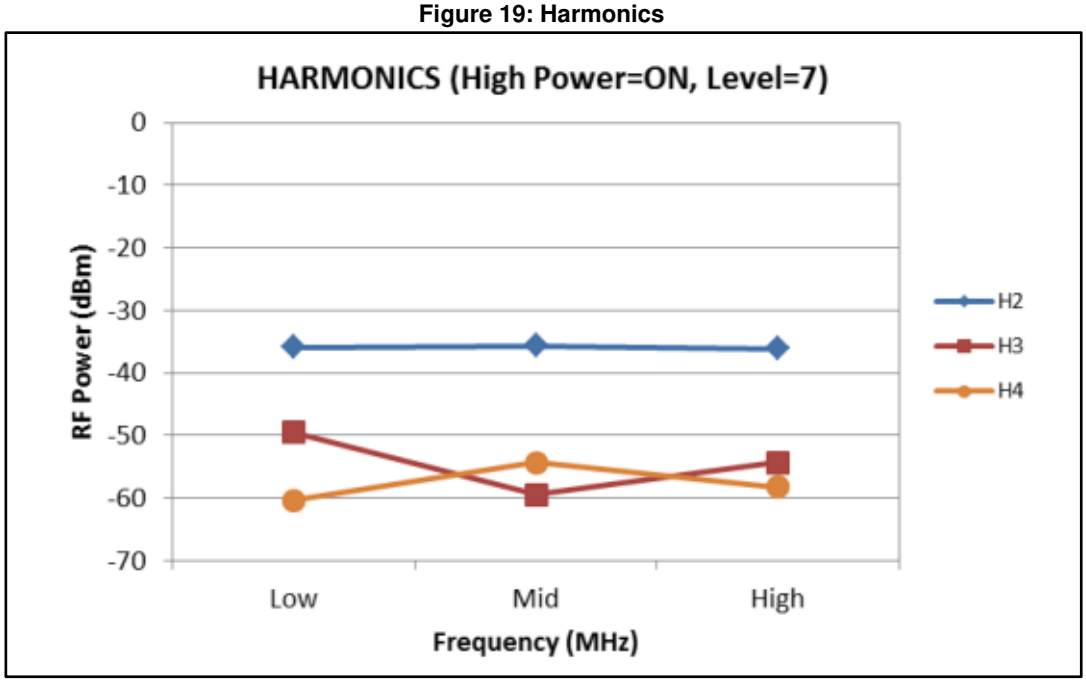

Figure 20: Sensitivity

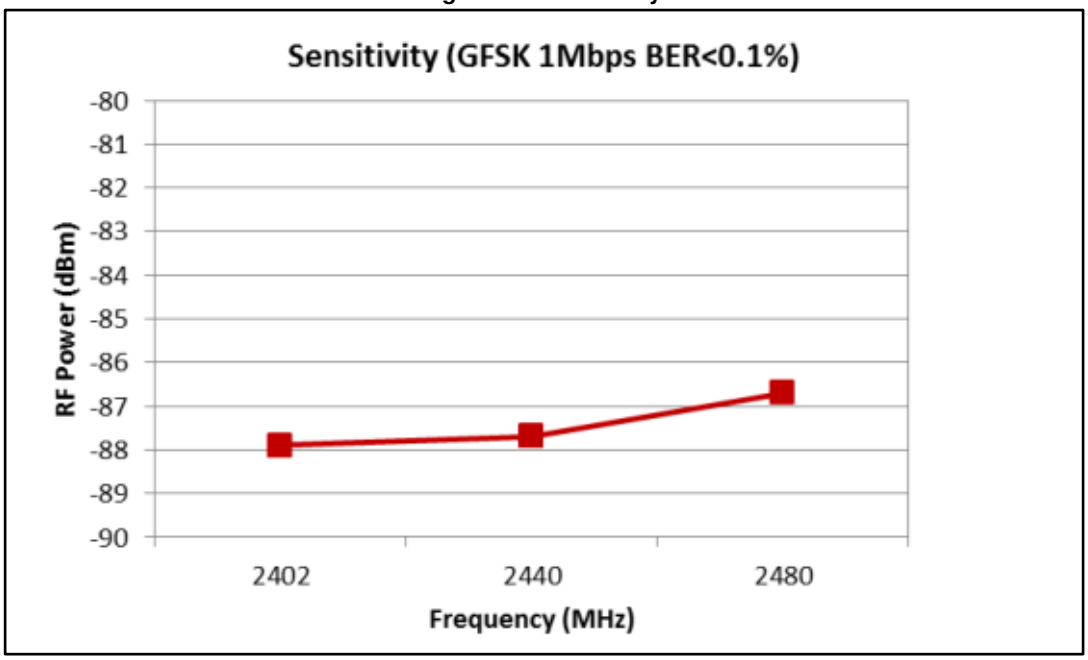

Figure 21: P_{out}

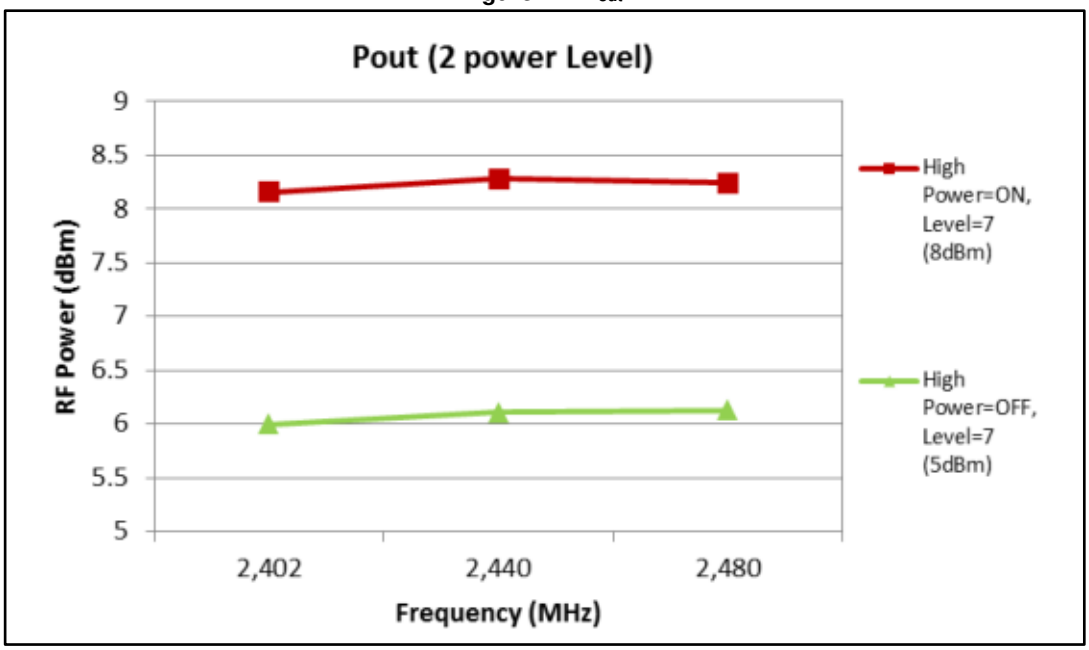

4 Package information

In order to meet environmental requirements, ST offers these devices in different grades of ECOPACK® packages, depending on their level of environmental compliance. ECOPACK® specifications, grade definitions and product status are available at: ***www.st.com***. ECOPACK® is an ST trademark.

- Epoxy meets UL94, V0
- Lead-free package

4.1 Flip-Chip 4 bumps package information

Figure 22: Flip-Chip 4 bumps package outline

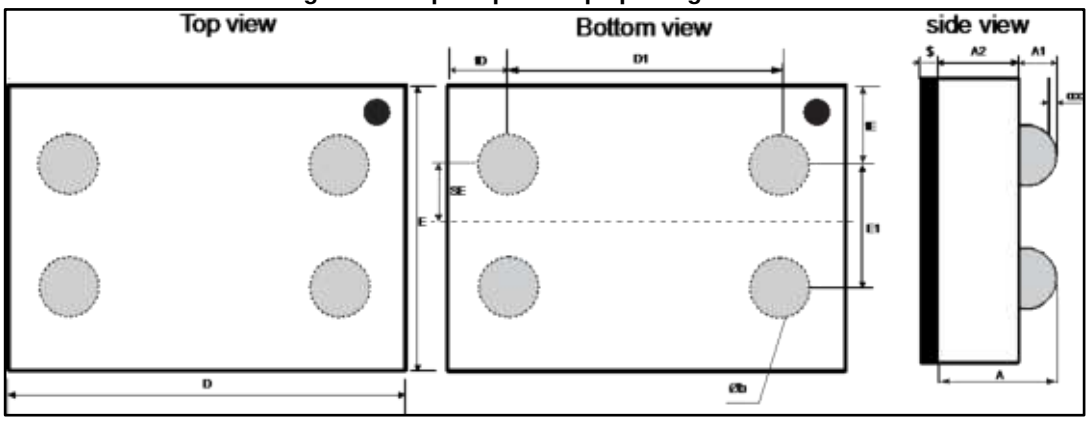

Table 4: Flip-Chip 5 bumps dimensions

Parameter		Dimesions (in mm)	
	Min.	Typ.	Max.
A	0.580	0.630	0.680
A1	0.180	0.205	0.230
A2	0.380	0.400	0.420
b	0.230	0.255	0.280
D	1.375	1.400	1.425
D1	0.990	1.000	1.010
E	0.825	0.850	0.875
E1	0.390	0.400	0.410
SE		0.200	
fD	0.170	0.200	0.230
fE	0.195	0.225	0.255
ccc			0.050
Ø		0.025	

Figure 23: Footprint - 3 mils stencil -non solder mask defined

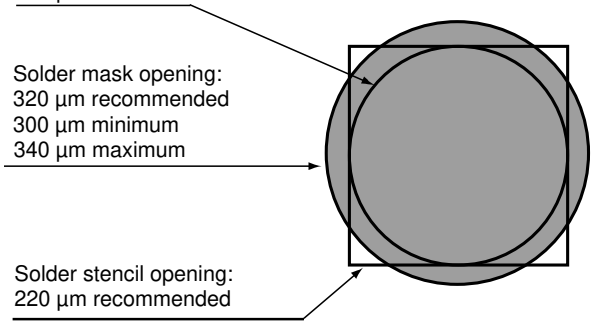

Figure 24: Footprint - 3 mils stencil - solder mask defined

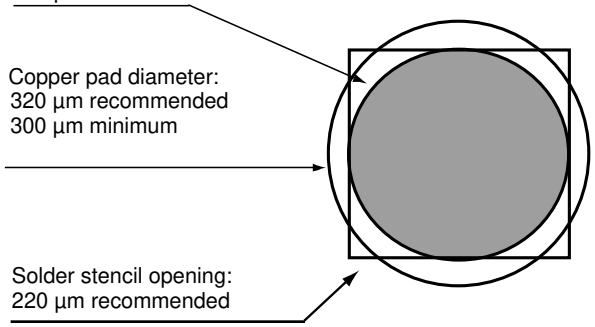

Figure 25: Footprint - 5 mils stencil -non solder mask defined

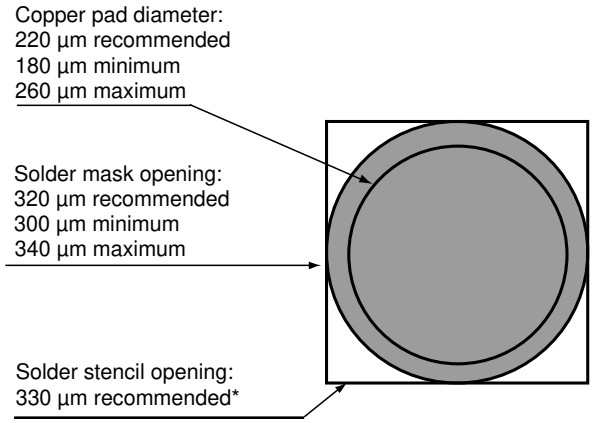

*depending on paste, it can go down to 270 µm

Figure 26: Footprint - 5 mils stencil - solder mask defined

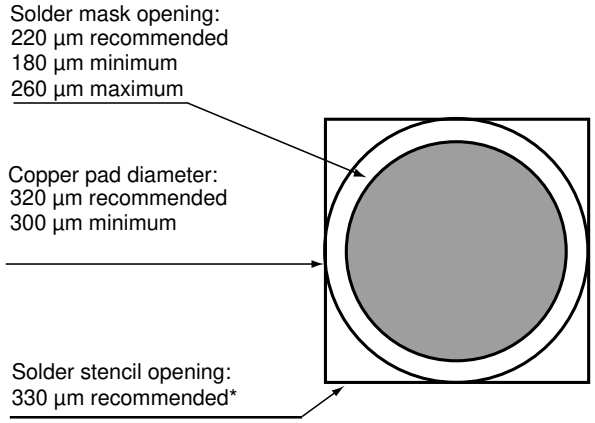

*depending on paste, it can go down to 270 µm

4.2 Flip-chip 4 bumps packing information

Figure 27: Marking

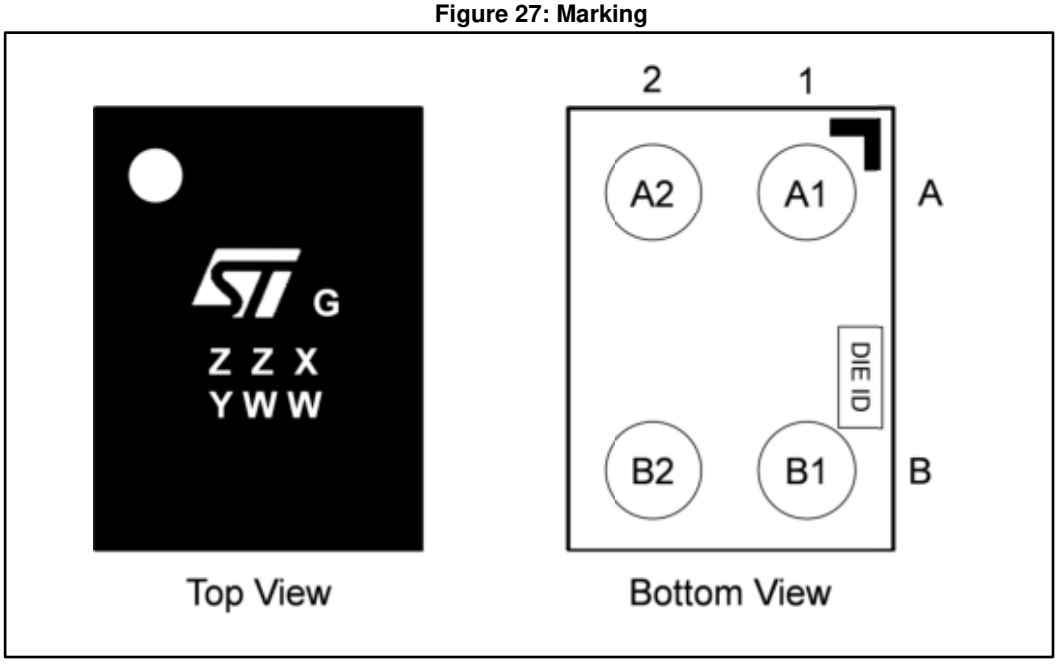

Table 5: Document revision history

Ball	Name	Description
A1	ANT	Antenna connection
A2	GND	Ground
B1	Rx_P	Balun receive positive output
B2	Rx_N	Balun receive negative output

Figure 28: Flip Chip tape and reel specifications

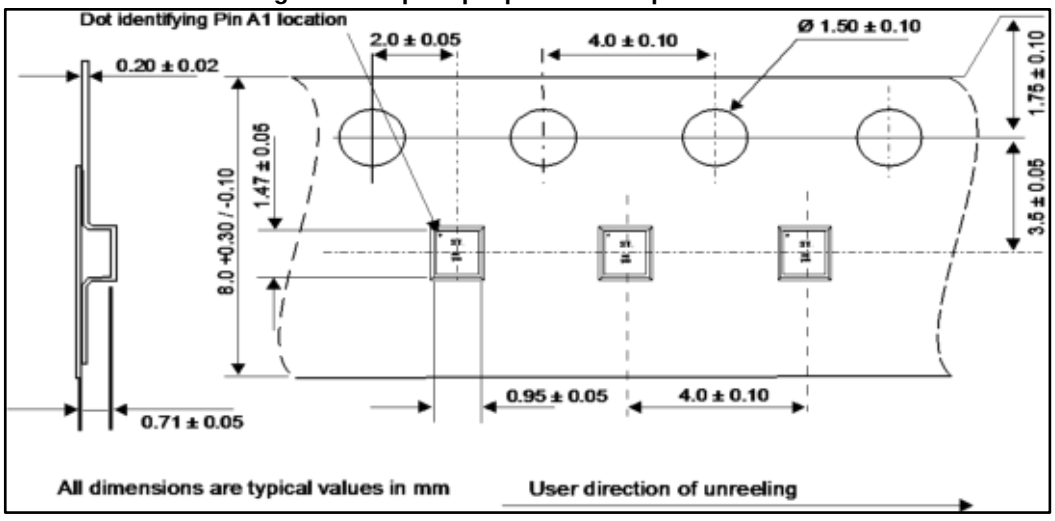

More packing information is available in the application note:

- AN2348 Flip-Chip: “Package description and recommendations for use”

5 Ordering information

Table 6: Ordering information

Order code	Marking	Package	Weight	Base qty.	Delivery mode
BALF-NRG-01D3	SV	Flip-Chip package (4 bumps)	1.35 mg	5000	Tape and reel (7")

6 Revision history

Table 7: Document revision history

Date	Revision	Changes
17-Jun-2014	1	Initial release.
17-Jul-2014	2	Updated Figure 13, Figure 17, Figure 22 and package view on cover page. Corrected typo error on Table 2.
18-Aug-2014	3	Updated title and description in cover page.
29-Sep-2015	4	Updated Figure 22. Added Figure 25 and Figure 26. Reformatted to current standards.
04-May-2017	5	Updated *Figure 2: "Application schematic with WLCSP type BlueNRG"*.

IMPORTANT NOTICE – PLEASE READ CAREFULLY

STMicroelectronics NV and its subsidiaries (“ST”) reserve the right to make changes, corrections, enhancements, modifications, and improvements to ST products and/or to this document at any time without notice. Purchasers should obtain the latest relevant information on ST products before placing orders. ST products are sold pursuant to ST’s terms and conditions of sale in place at the time of order acknowledgement.

Purchasers are solely responsible for the choice, selection, and use of ST products and ST assumes no liability for application assistance or the design of Purchasers’ products.

No license, express or implied, to any intellectual property right is granted by ST herein.

Resale of ST products with provisions different from the information set forth herein shall void any warranty granted by ST for such product.

ST and the ST logo are trademarks of ST. All other product or service names are the property of their respective owners.

Information in this document supersedes and replaces information previously supplied in any prior versions of this document.

© 2017 STMicroelectronics – All rights reserved