STD12NF06L-1

N-channel 60 V, 0.07 Ω typ.,12 A, STripFET™ II Power MOSFET in an IPAK package

Datasheet - production data

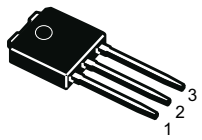

IPAK

Figure 1. Internal schematic diagram

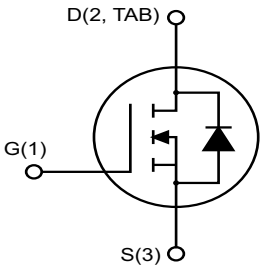

Features

Order code	V_{DS}	$R_{DS(on)}$ max.	I_D
STD12NF06L-1	60 V	0.09 Ω	12 A

- Exceptional dv/dt capability
- Low gate charge

Applications

- Switching applications

Description

This Power MOSFET has been developed using STMicroelectronics' unique STripFET™ process, which is specifically designed to minimize input capacitance and gate charge. This renders the device suitable for use as primary switch in advanced high-efficiency isolated DC-DC converters for telecom and computer applications, and applications with low gate charge driving requirements.

Table 1. Device summary

Order code	Marking	Package	Packaging
STD12NF06L-1	D12NF06L	IPAK	Tube

This is information on a product in full production. www.st.com

Contents

1 Electrical ratings 3

2 Electrical characteristics 4

2.1 Electrical characteristics (curves) 6

3 Test circuit 8

4 Package mechanical data 9

5 Revision history 13

1 Electrical ratings

Table 2. Absolute maximum ratings

Symbol	Parameter	Value	Unit
V_{DS}	Drain-source voltage	60	V
V_{GS}	Gate-source voltage	± 16	V
I_D	Drain current (continuous) at T_C = 25 °C	12	A
I_D	Drain current (continuous) at T_C = 100 °C	8.5	A
I_{DM}(1)	Drain current (pulsed)	48	A
P_{TOT}	Total dissipation at T_C = 25 °C	30	W
	Derating factor	0.2	W/°C
dv/dt(2)	Peak diode recovery voltage slope	15	V/ns
E_{AS}(3)	Single pulse avalanche energy	100	mJ
T_{stg}	Storage temperature	-55 to 175	°C
T_J	Max. operating junction temperature		

1. Pulse width limited by safe operating area
2. $I_{SD} \leq 12$ A, di/dt ≤ 200 A/µs, $V_{DS} \leq 40$ V, $T_J \leq T_{JMAX}$
3. Starting T_J = 25 °C, I_D = 6 A, V_{DD} = 30 V

Table 3. Thermal data

Symbol	Parameter	Value	Unit
$R_{thj\text{-}case}$	Thermal resistance junction-case max.	5	°C/W
$R_{thj\text{-}amb}$	Thermal resistance junction-ambient max.	100	°C/W

2 Electrical characteristics

(T_{CASE} = 25 °C unless otherwise specified)

Table 4. On/off states

Symbol	Parameter	Test conditions	Min.	Typ.	Max.	Unit
$V_{(BR)DSS}$	Drain-source breakdown voltage	V_{GS} = 0, I_D = 250 µA,	60			V
I_{DSS}	Zero gate voltage drain current	V_{GS} = 0, V_{DS} = 60			1	µA
		V_{GS} = 0, V_{DS} = 60 T_C = 125 °C			10	µA
I_{GSS}	Gate body leakage current	V_{DS} = 0 V_{GS} = ± 16 V			±100	nA
$V_{GS(th)}$	Gate threshold voltage	V_{DS} = V_{GS}, I_D = 250 µA	1		2	V
$R_{DS(on)}$	Static drain-source on-resistance	V_{GS} = 10 V, I_D = 6 A		0.07	0.09	Ω
		V_{GS} = 5 V, I_D = 6 A		0.08	0.10	Ω

Table 5. Dynamic

Symbol	Parameter	Test conditions	Min.	Typ.	Max.	Unit
C_{iss}	Input capacitance	V_{DS} = 25 V, f = 1 MHz, V_{GS} = 0		350		pF
C_{oss}	Output capacitance			75		pF
C_{rss}	Reverse transfer capacitance			30		pF
Q_g	Total gate charge	V_{DD} = 48 V, I_D = 12 A V_{GS} = 5 V (see *Figure 14*)		7.5	10	nC
Q_{gs}	Gate-source charge			2.5		nC
Q_{gd}	Gate-drain charge			3.0		nC

Table 6. Switching times

Symbol	Parameter	Test conditions	Min.	Typ.	Max.	Unit
$t_{d(on)}$	Turn-on delay time	V_{DD} = 30 V, I_D = 6 A, R_G = 4.7 Ω, V_{GS} = 4.5 V (see *Figure 13*)		10		ns
t_r	Rise time			35		ns
$t_{d(off)}$	Turn-off delay time			20		ns
t_f	Fall time			13		ns

Table 7. Source-drain diode

Symbol	Parameter	Test conditions	Min.	Typ.	Max.	Unit
I_{SD}	Source-drain current				12	A
I_{SDM} (1)	Source-drain current (pulsed)				48	A
V_{SD} (2)	Forward on voltage	I_{SD} = 12 A, V_{GS} = 0			1.5	V
t_{rr}	Reverse recovery time	I_{SD} = 12 A, di/dt = 100 A/µs, V_{DD} = 16 V, T_J = 150 °C (see *Figure 15*)		50		ns
Q_{rr}	Reverse recovery charge			65		nC
I_{RRM}	Reverse recovery current			2.5		A

1. Pulse width limited by safe operating area.
2. Pulsed: pulse duration = 300 µs, duty cycle 1.5%.

2.1 Electrical characteristics (curves)

Figure 2. Safe operating area

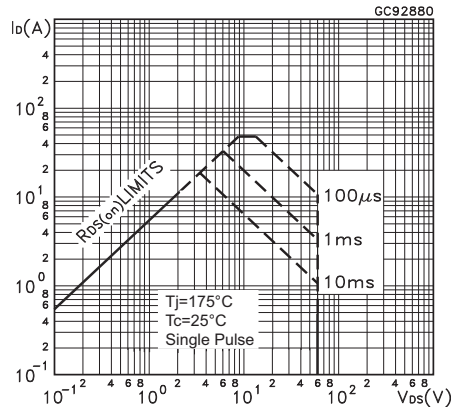

Figure 3. Thermal impedance

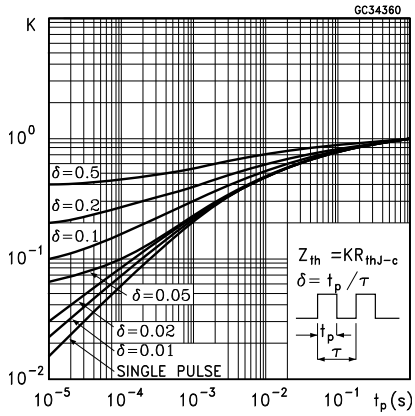

Figure 4. Output characteristics

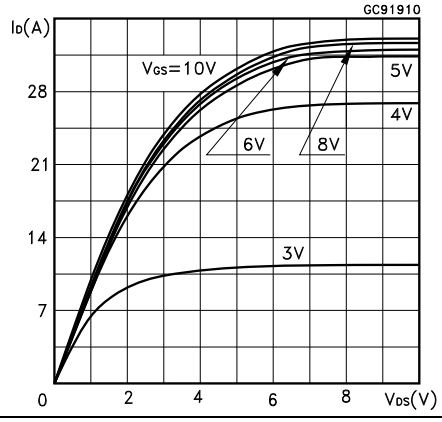

Figure 5. Transfer characteristics

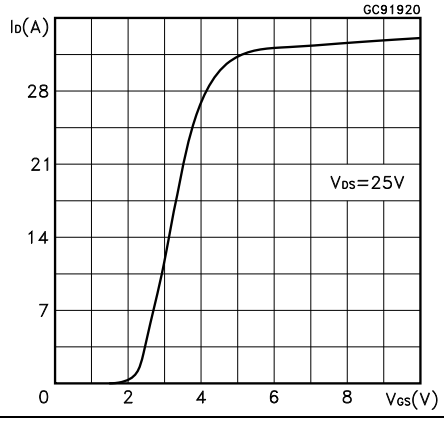

Figure 6. Normalized $V_{(BR)DSS}$ vs. temperature

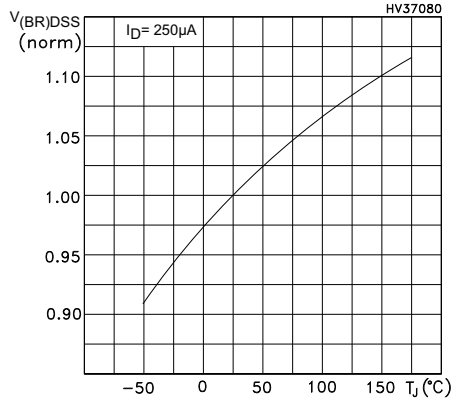

Figure 7. Static drain-source on-resistance

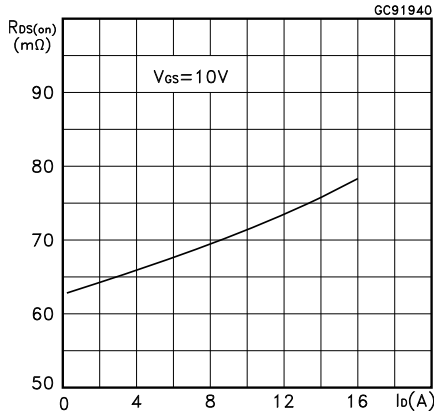

Figure 8. Gate charge vs. gate-source voltage

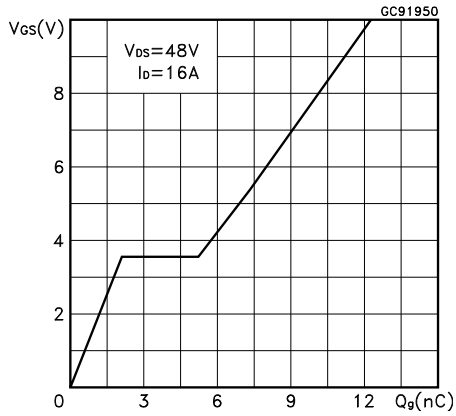

Figure 9. Capacitance variations

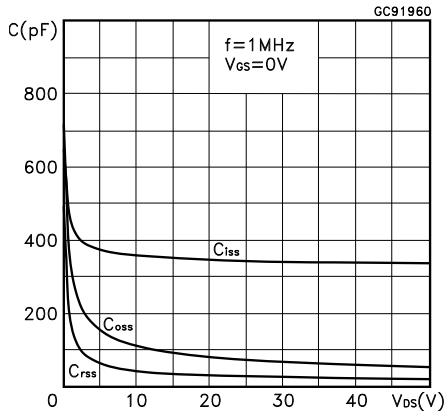

Figure 10. Normalized gate threshold voltage vs. temperature

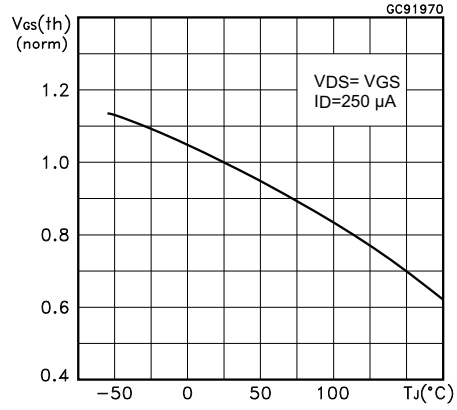

Figure 11. Normalized on-resistance vs. temperature

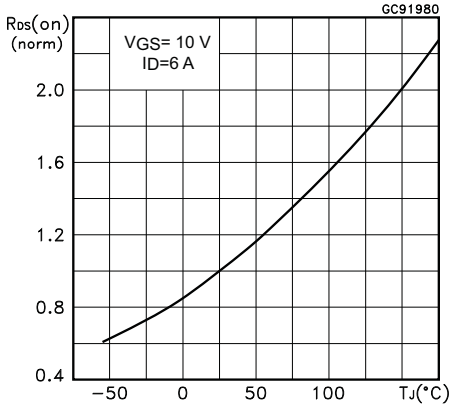

Figure 12. Source-drain diode forward characteristics

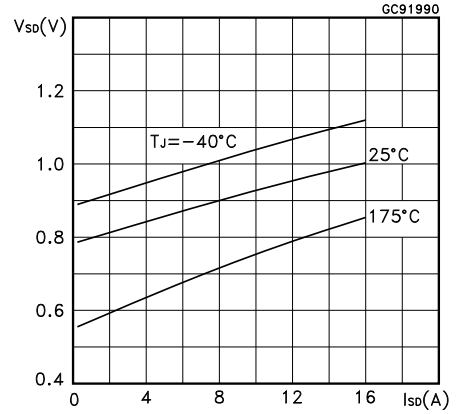

3 Test circuit

Figure 13. Switching times test circuit for resistive load

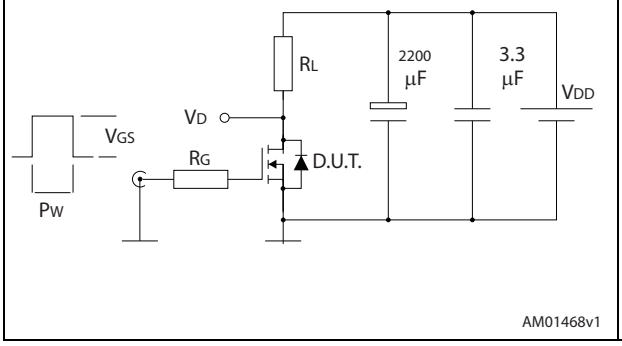

Figure 14. Gate charge test circuit

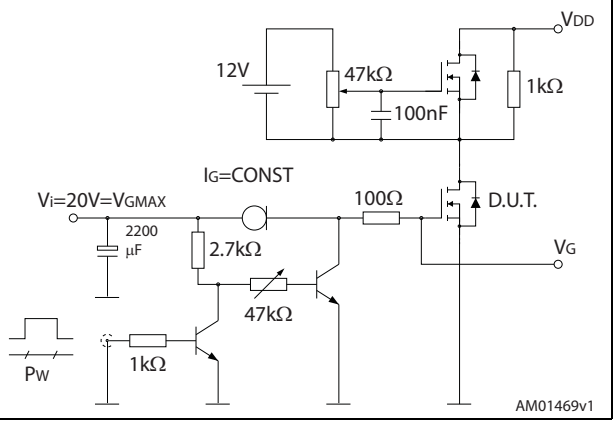

Figure 15. Test circuit for inductive load switching and diode recovery times

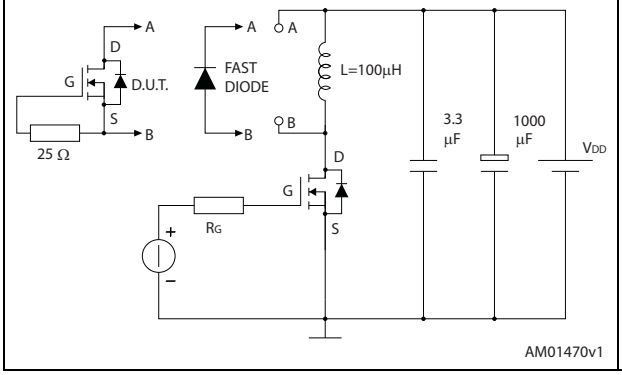

Figure 16. Unclamped inductive load test circuit

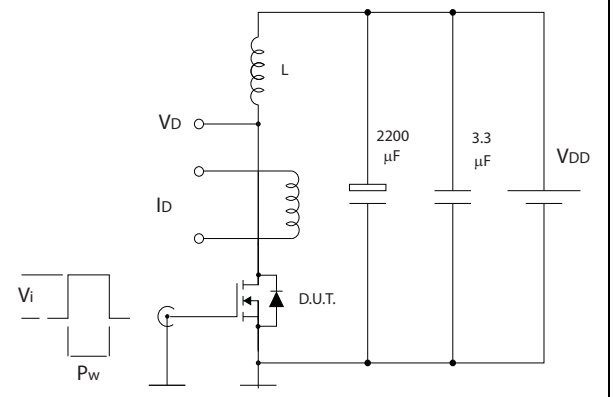

Figure 17. Unclamped inductive waveform

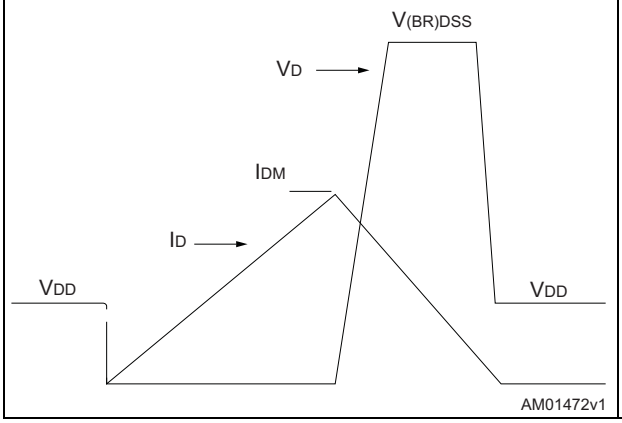

Figure 18. Switching time waveform

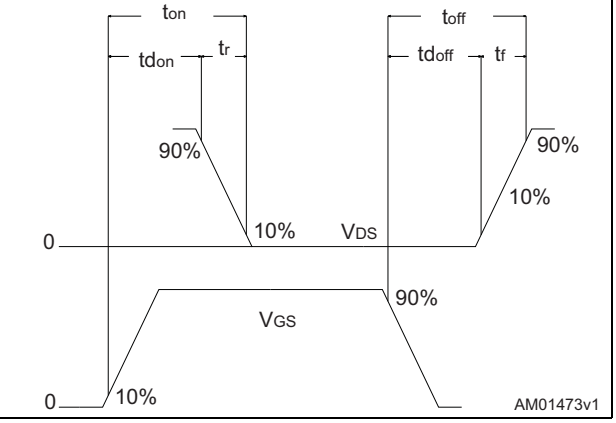

4 Package mechanical data

In order to meet environmental requirements, ST offers these devices in different grades of ECOPACK® packages, depending on their level of environmental compliance. ECOPACK® specifications, grade definitions and product status are available at: *www.st.com*. ECOPACK® is an ST trademark.

Figure 19. IPAK (TO-251) type A drawing

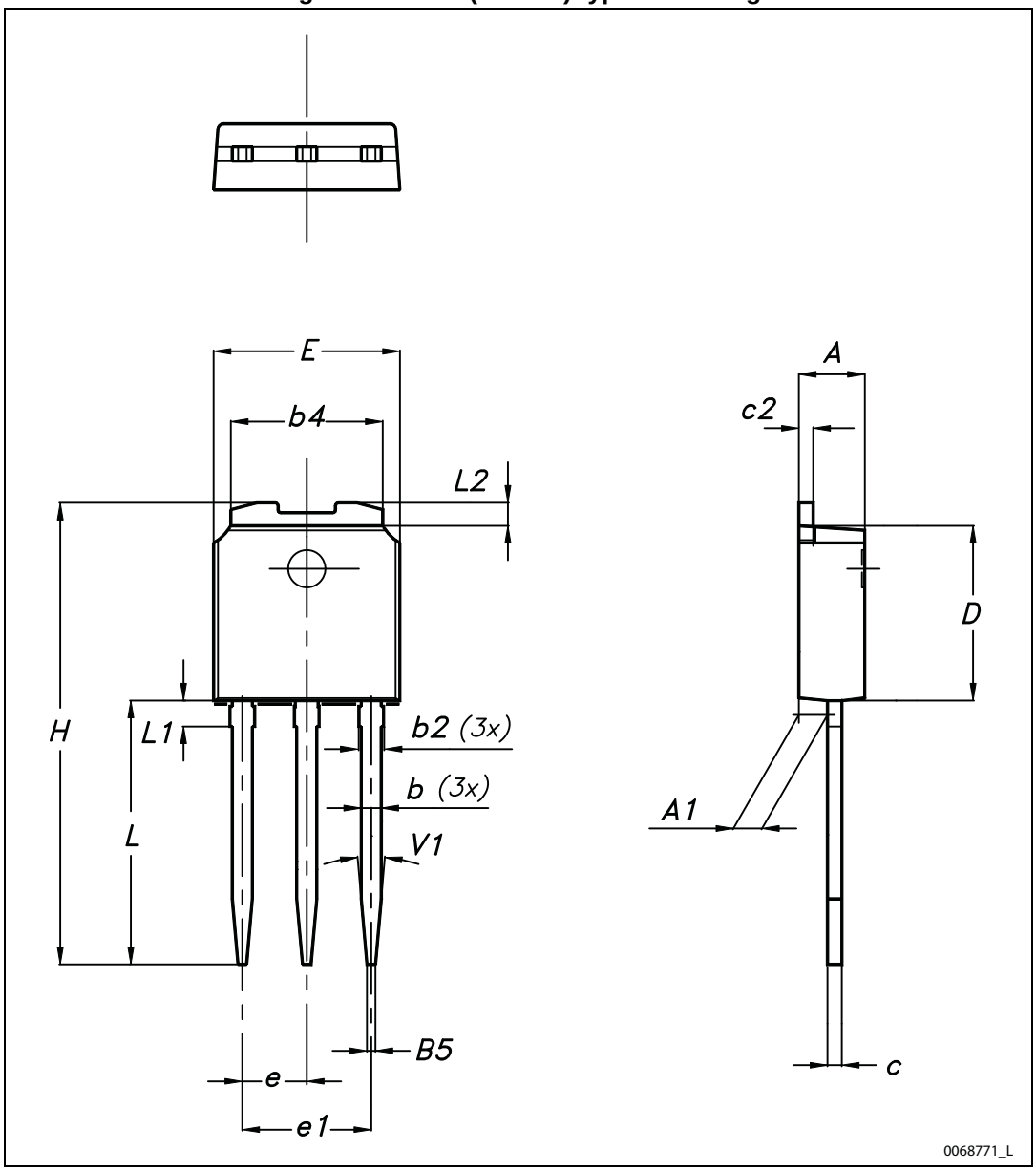

Table 8. IPAK (TO-251) type A mechanical data

DIM	mm.		
	min.	typ.	max.
A	2.20		2.40
A1	0.90		1.10
b	0.64		0.90
b2			0.95
b4	5.20		5.40
B5		0.30	
c	0.45		0.60
c2	0.48		0.60
D	6.00		6.20
E	6.40		6.60
e		2.28	
e1	4.40		4.60
H		16.10	
L	9.00		9.40
L1	0.80		1.20
L2		0.80	1.00
V1		10°	

Figure 20. IPAK (TO-251) type C drawing

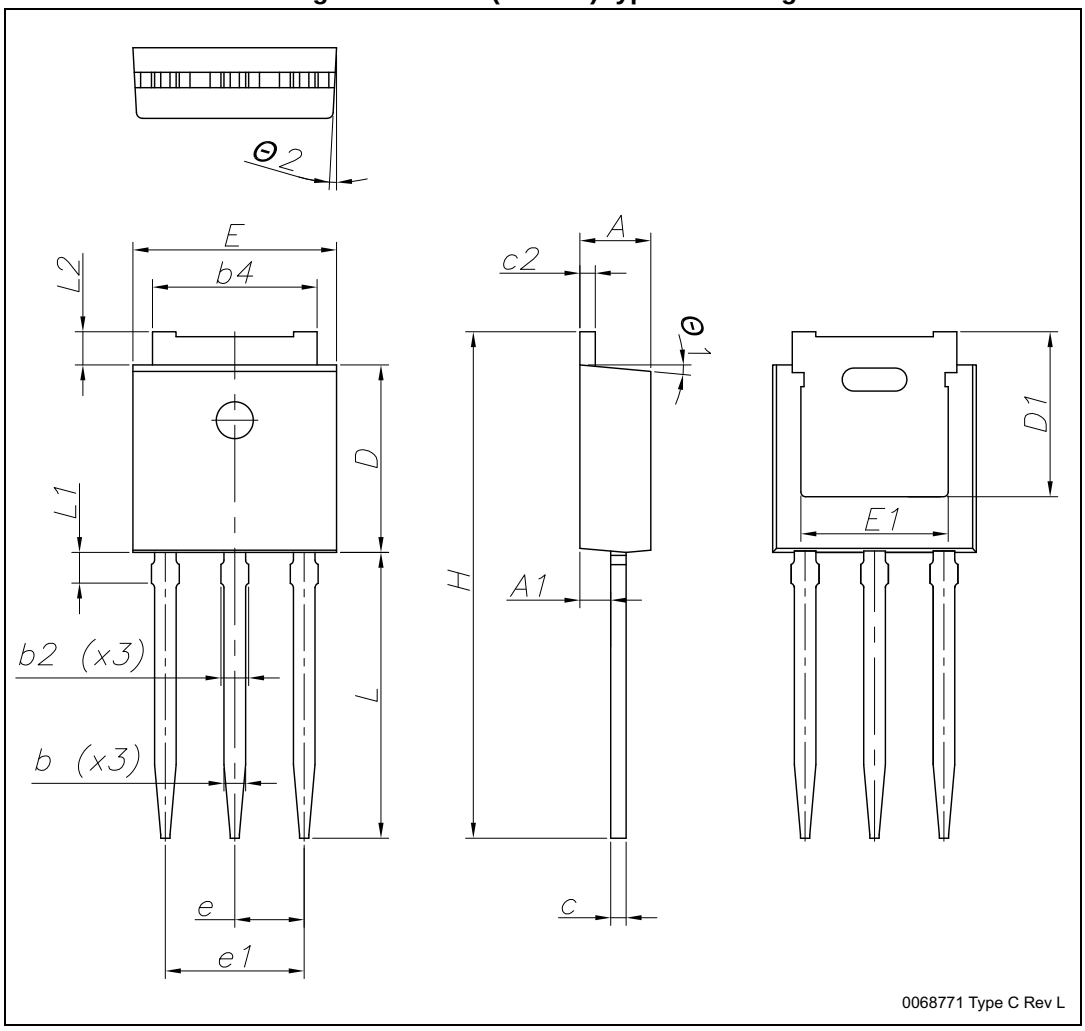

Table 9. IPAK (TO-251) type C mechanical data

Dim.	mm		
	min.	typ.	max.
A	2.20	2.30	2.35
A1	0.90	1.00	1.10
b	0.66		0.79
b2			0.90
b4	5.23	5.33	5.43
c	0.46		0.59
c2	0.46		0.59
D	6.00	6.10	6.20
D1	5.20	5.37	5.55
E	6.50	6.60	6.70
E1	4.60	4.78	4.95
e	2.20	2.25	2.30
e1	4.40	4.50	4.60
H	16.18	16.48	16.78
L	9.00	9.30	9.60
L1	0.80	1.00	1.20
L2	0.90	1.08	1.25
θ1	3°	5°	7°
θ2	1°	3°	5°

5 Revision history

Table 10. Document revision history

Date	Revision	Changes
03-Jul-2014	1	Initial release.The part number STD12NF06L-1 previously included in datasheet with docID8179.
15-Oct-2014	2	Updated *Section 4: Package mechanical data*.
14-Nov-2014	3	Updated title in cover page and *Table 4: On/off states*. Updated *Figure 2: Safe operating area* ,*Figure 3: Thermal impedance*,.*Figure 10: Normalized gate threshold voltage vs. temperature* and *Figure 11: Normalized on-resistance vs. temperature*. Minor text changes.

IMPORTANT NOTICE – PLEASE READ CAREFULLY

STMicroelectronics NV and its subsidiaries (“ST”) reserve the right to make changes, corrections, enhancements, modifications, and improvements to ST products and/or to this document at any time without notice. Purchasers should obtain the latest relevant information on ST products before placing orders. ST products are sold pursuant to ST’s terms and conditions of sale in place at the time of order acknowledgement.

Purchasers are solely responsible for the choice, selection, and use of ST products and ST assumes no liability for application assistance or the design of Purchasers’ products.

No license, express or implied, to any intellectual property right is granted by ST herein.

Resale of ST products with provisions different from the information set forth herein shall void any warranty granted by ST for such product.

ST and the ST logo are trademarks of ST. All other product or service names are the property of their respective owners.

Information in this document supersedes and replaces information previously supplied in any prior versions of this document.

© 2014 STMicroelectronics – All rights reserved