STGB30H60DFB, STGP30H60DFB

Datasheet

Trench gate field-stop 600 V, 30 A high speed HB series IGBT

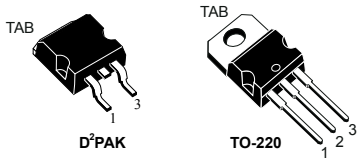

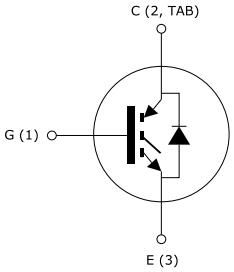

Features

- Maximum junction temperature: T_J = 175 °C
- High speed switching series
- Minimized tail current
- Low saturation voltage: $V_{CE(sat)}$ = 1.55 V (typ.) @ I_C = 30 A
- Tight parameter distribution
- Safe paralleling
- Positive $V_{CE(sat)}$ temperature coefficient
- Low thermal resistance
- Very fast soft recovery antiparallel diode

Applications

- Photovoltaic inverters
- High frequency converters

Description

These devices are IGBTs developed using an advanced proprietary trench gate field-stop structure. These devices are part of the new HB series of IGBTs, which represent an optimum compromise between conduction and switching loss to maximize the efficiency of any frequency converter. Furthermore, the slightly positive $V_{CE(sat)}$ temperature coefficient and very tight parameter distribution result in safer paralleling operation.

Product status link
STGB30H60DFB
STGP30H60DFB

1 Electrical ratings

Table 1. Absolute maximum ratings

Symbol	Parameter	Value	Unit
V_{CES}	Collector-emitter voltage (V_{GE} = 0 V)	600	V
I_C	Continuous collector current at T_C = 25 °C	60	A
	Continuous collector current at T_C = 100 °C	30	
I_{CP} (1)	Pulsed collector current	120	
V_{GE}	Gate-emitter voltage	±20	V
	Transient gate-emitter voltage	±30	
I_F	Continuous forward current at T_C = 25 °C	60	A
	Continuous forward current at T_C = 100 °C	30	
I_{FP} (1)	Pulsed forward current	120	
P_{TOT}	Total power dissipation at T_C = 25 °C	260	W
T_{STG}	Storage temperature range	- 55 to 150	°C
T_J	Operating junction temperature range	- 55 to 175	

1. *Pulse width limited by maximum junction temperature.*

Table 2. Thermal data

Symbol	Parameter	Value	Unit
R_{thJC}	Thermal resistance junction-case IGBT	0.58	°C/W
R_{thJC}	Thermal resistance junction-case diode	2.08	
R_{thJA}	Thermal resistance junction-ambient	62.5	

2 Electrical characteristics

T_C = 25 °C unless otherwise specified

Table 3. Static characteristics

Symbol	Parameter	Test conditions	Min.	Typ.	Max.	Unit
$V_{(BR)CES}$	Collector-emitter breakdown voltage	V_{GE} = 0 V, I_C = 2 mA	600			V
$V_{CE(sat)}$	Collector-emitter saturation voltage	V_{GE} = 15 V, I_C = 30 A		1.55	2	V
		V_{GE} = 15 V, I_C = 30 A, T_J = 125 °C		1.65		
		V_{GE} = 15 V, I_C = 30 A, T_J = 175 °C		1.75		
V_F	Forward on-voltage	I_F = 30 A		2	2.6	V
		I_F = 30 A, T_J = 125 °C		1.7		
		I_F = 30 A, T_J = 175 °C		1.6		
$V_{GE(th)}$	Gate threshold voltage	V_{CE} = V_{GE}, I_C = 1 mA	5	6	7	V
I_{CES}	Collector cut-off current	V_{GE} = 0 V, V_{CE} = 600 V			25	µA
I_{GES}	Gate-emitter leakage current	V_{CE} = 0 V, V_{GE} = ±20 V			±250	nA

Table 4. Dynamic characteristics

Symbol	Parameter	Test conditions	Min.	Typ.	Max.	Unit
C_{ies}	Input capacitance	V_{CE}= 25 V, f = 1 MHz, V_{GE} = 0 V	-	3659	-	pF
C_{oes}	Output capacitance		-	101	-	
C_{res}	Reverse transfer capacitance		-	76	-	
Q_g	Total gate charge	V_{CC} = 520 V, I_C = 30 A, V_{GE} = 0 to 15 V (see Figure 28. Gate charge test circuit)	-	149	-	nC
Q_{ge}	Gate-emitter charge		-	25	-	
Q_{gc}	Gate-collector charge		-	62	-	

Table 5. IGBT switching characteristics (inductive load)

Symbol	Parameter	Test conditions	Min.	Typ.	Max.	Unit
$t_{d(on)}$	Turn-on delay time	V_{CE} = 400 V, I_C = 30 A, V_{GE} = 15 V, R_G = 10 Ω (see Figure 27. Test circuit for inductive load switching)	-	37	-	ns
t_r	Current rise time		-	14.6	-	
$(di/dt)_{on}$	Turn-on current slope		-	1643	-	A/µs
$t_{d(off)}$	Turn-off-delay time		-	146	-	ns
t_f	Current fall time		-	23	-	
E_{on} (1)	Turn-on switching energy		-	383	-	µJ
E_{off} (2)	Turn-off switching energy		-	293	-	
E_{ts}	Total switching energy		-	676	-	
$t_{d(on)}$	Turn-on delay time	V_{CE} = 400 V, I_C = 30 A, V_{GE} = 15 V, R_G = 10 Ω, T_J = 175 °C (see Figure 27. Test circuit for inductive load switching)	-	35	-	ns
t_r	Current rise time		-	16.1	-	
$(di/dt)_{on}$	Turn-on current slope		-	1496	-	A/µs
$t_{d(off)}$	Turn-off-delay time		-	158	-	ns
t_f	Current fall time		-	65	-	
E_{on} (1)	Turn-on switching energy		-	794	-	µJ
E_{off} (2)	Turn-off switching energy		-	572	-	
E_{ts}	Total switching energy		-	1366	-	

1. *Including the reverse recovery of the diode.*
2. *Including the tail of the collector current.*

Table 6. Diode switching characteristics (inductive load)

Symbol	Parameter	Test conditions	Min.	Typ.	Max.	Unit
t_{rr}	Reverse recovery time	I_F = 30 A, V_R = 400 V, V_{GE} = 15 V, di/dt = 1000 A/µs (see Figure 27. Test circuit for inductive load switching)	-	53	-	ns
Q_{rr}	Reverse recovery charge		-	384	-	nC
I_{rrm}	Reverse recovery current		-	14.5	-	A
dI_{rr}/dt	Peak rate of fall of reverse recovery current during t_b		-	788	-	A/µs
E_{rr}	Reverse recovery energy		-	104	-	µJ
t_{rr}	Reverse recovery time	I_F = 30 A, V_R = 400 V, V_{GE} = 15 V, di/dt = 1000 A/µs, T_J = 175 °C (see Figure 27. Test circuit for inductive load switching)	-	104	-	ns
Q_{rr}	Reverse recovery charge		-	1352	-	nC
I_{rrm}	Reverse recovery current		-	26	-	A
dI_{rr}/dt	Peak rate of fall of reverse recovery current during t_b		-	310	-	A/µs
E_{rr}	Reverse recovery energy		-	407	-	µJ

2.1 Electrical characteristics (curves)

Figure 1. Power dissipation vs case temperature

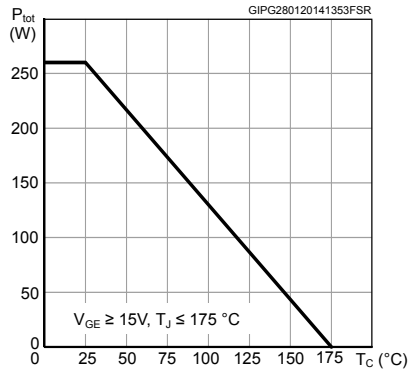

Figure 2. Collector current vs case temperature

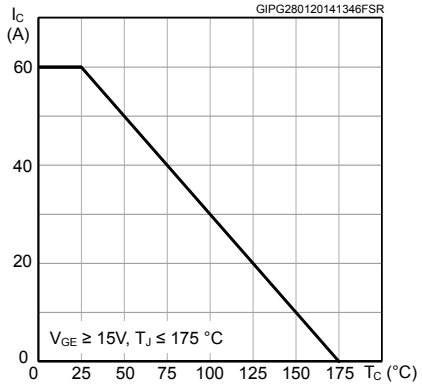

Figure 3. Output characteristics (T_J = 25 °C)

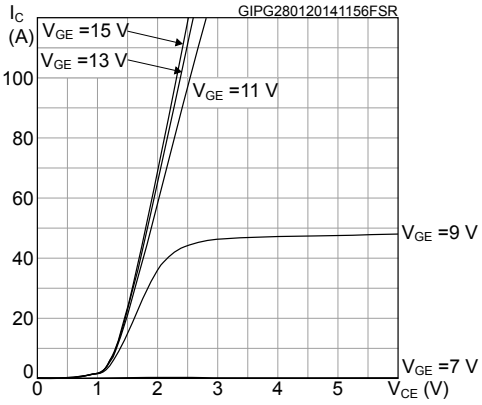

Figure 4. Output characteristics (T_J = 175 °C)

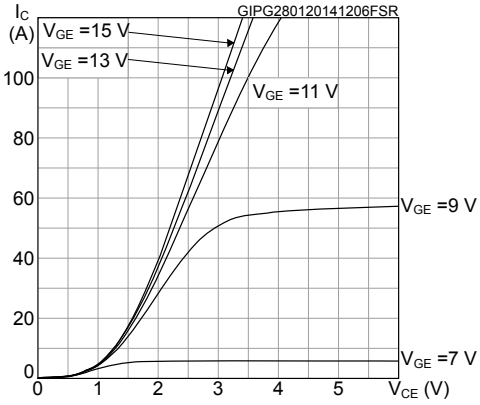

Figure 5. $V_{CE(sat)}$ vs junction temperature

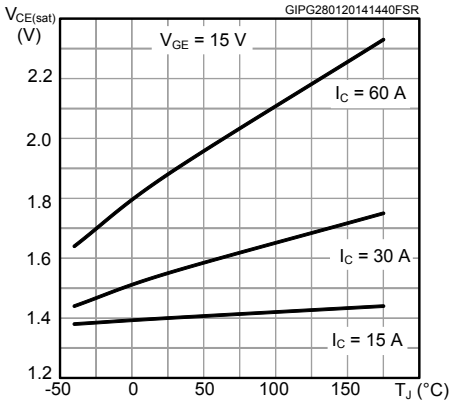

Figure 6. $V_{CE(sat)}$ vs collector current

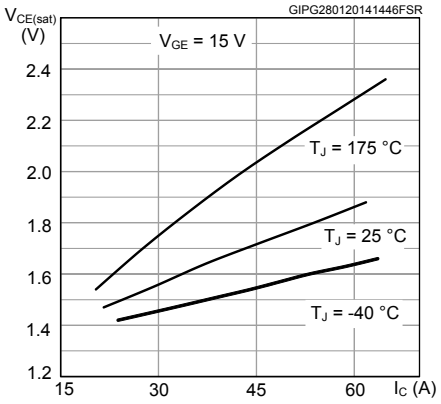

Figure 7. Collector current vs switching frequency

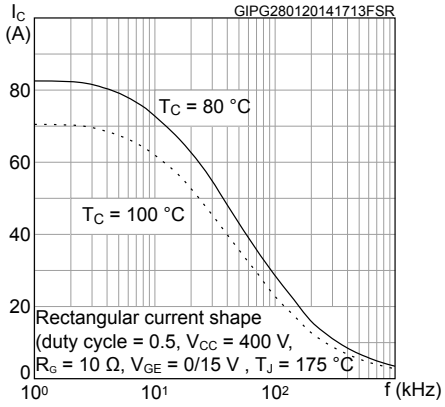

Figure 8. Forward bias safe operating area

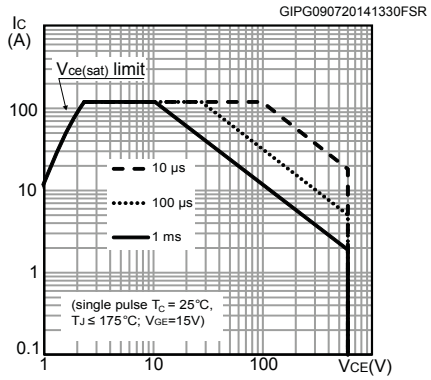

Figure 9. Transfer characteristics

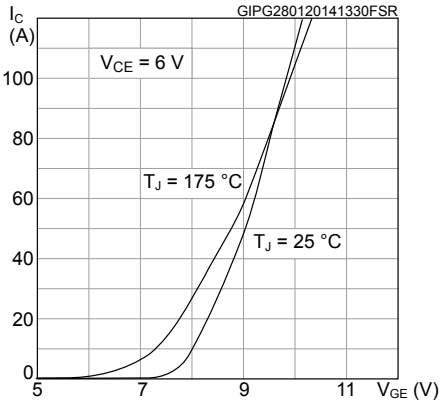

Figure 10. Diode V_F vs forward current

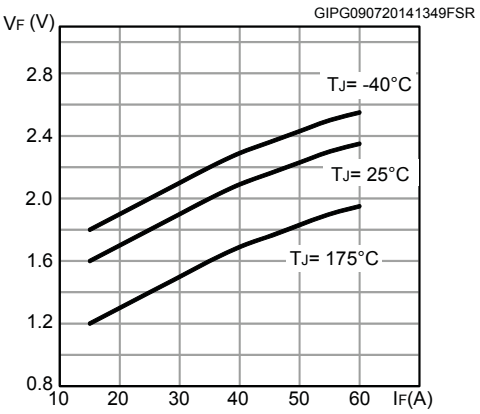

Figure 11. Normalized $V_{GE(th)}$ vs junction temperature

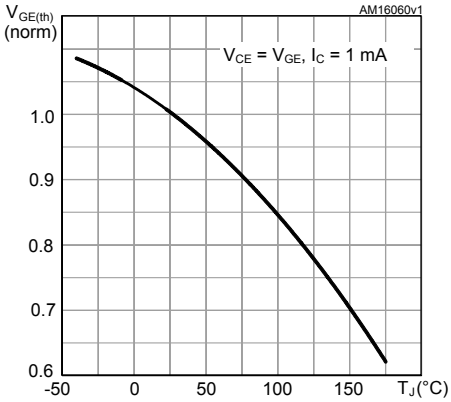

Figure 12. Normalized $V_{(BR)CES}$ vs junction temperature

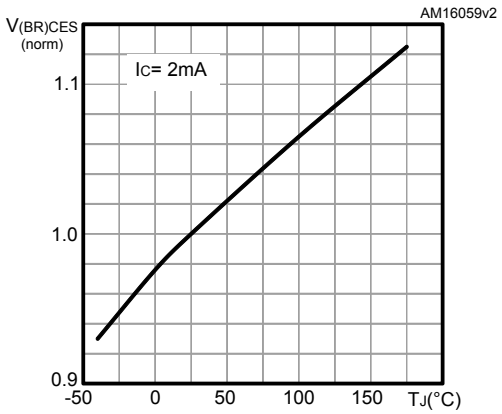

Figure 13. Capacitance variations

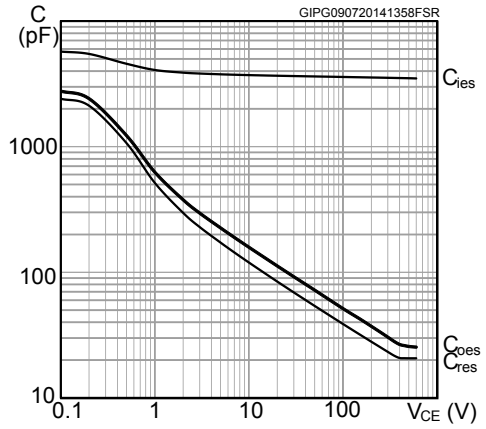

Figure 14. Gate charge vs. gate-emitter voltage

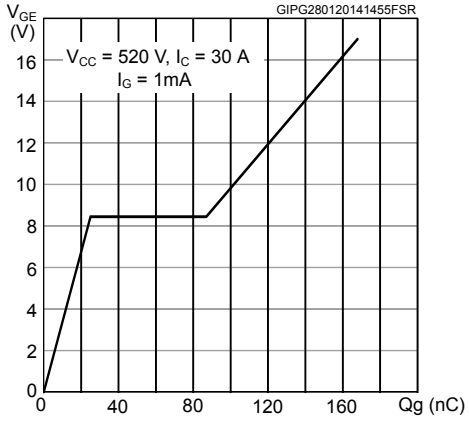

Figure 15. Switching energy vs collector current

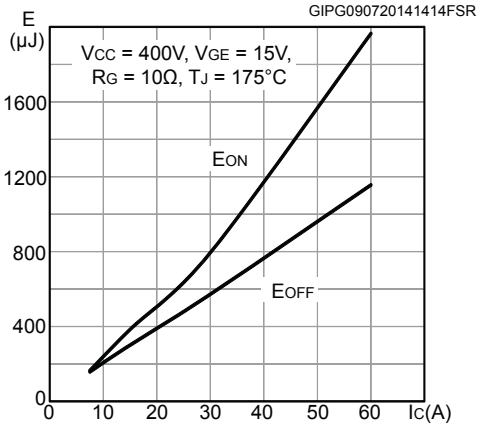

Figure 16. Switching energy vs gate resistance

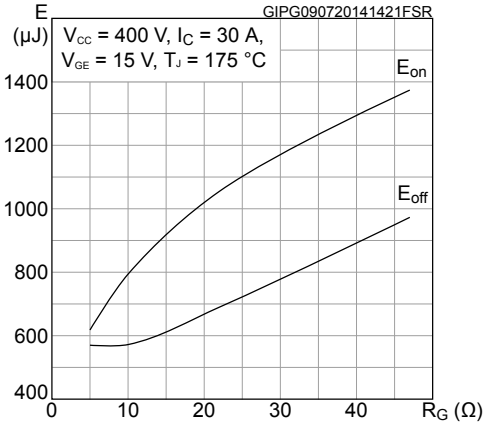

Figure 17. Switching energy vs temperature

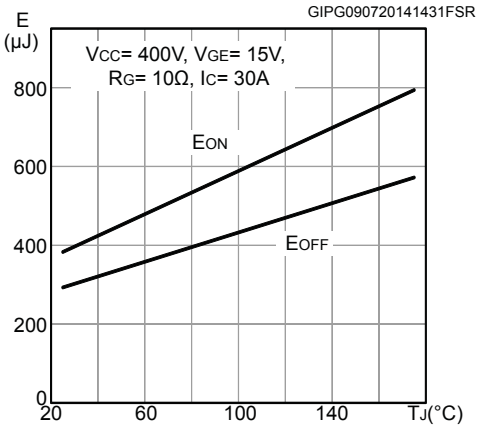

Figure 18. Switching energy vs collector emitter voltage

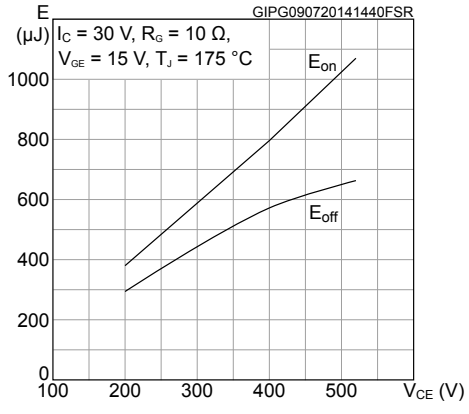

Figure 19. Switching times vs collector current

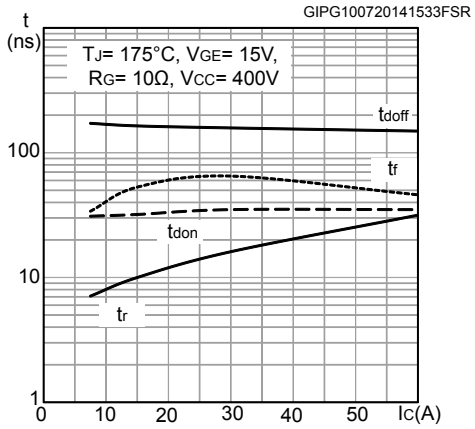

Figure 20. Switching times vs gate resistance

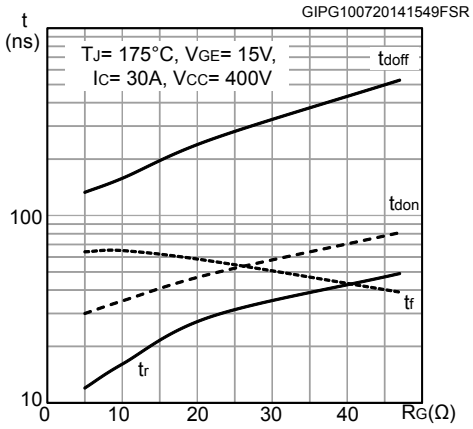

Figure 21. Reverse recovery current vs diode current slope

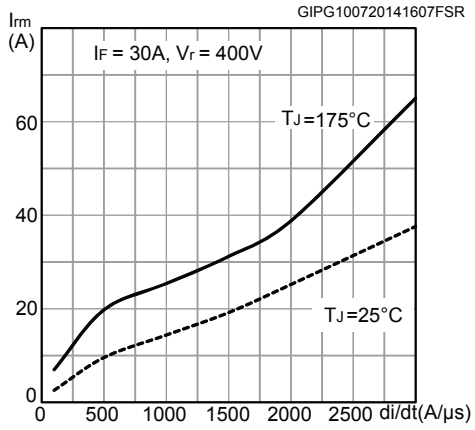

Figure 22. Reverse recovery time vs diode current slope

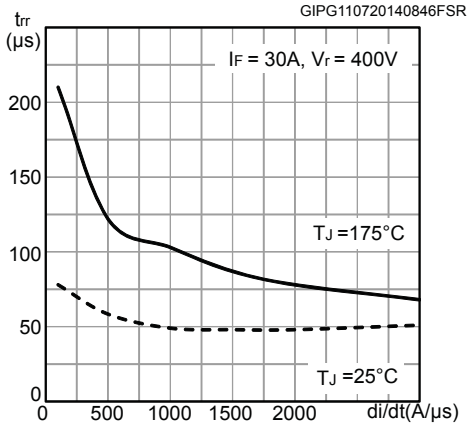

Figure 23. Reverse recovery charge vs diode current slope

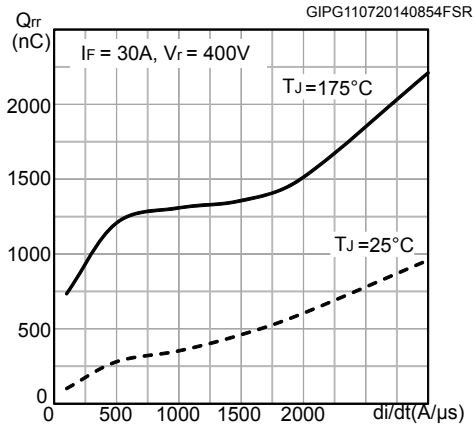

Figure 24. Reverse recovery energy vs diode current slope

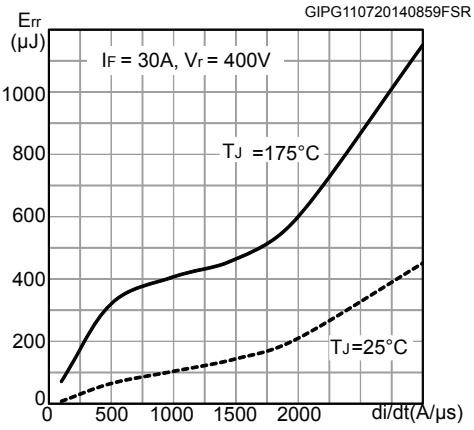

Figure 25. Thermal impedance for IGBT

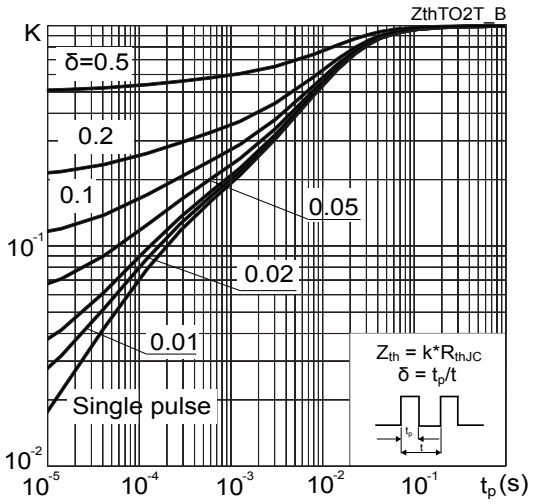

Figure 26. Thermal impedance for diode

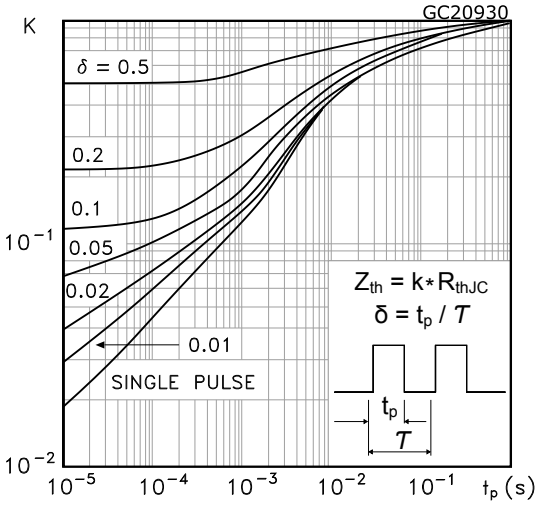

3 Test circuits

Figure 27. Test circuit for inductive load switching

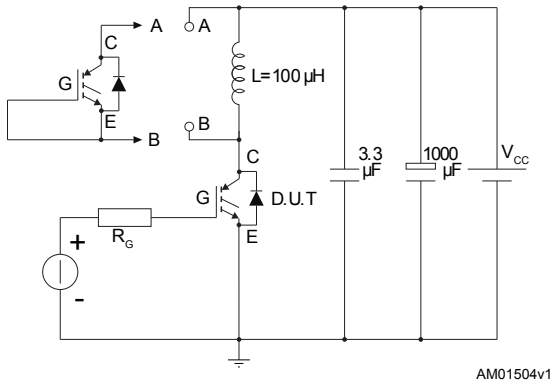

Figure 28. Gate charge test circuit

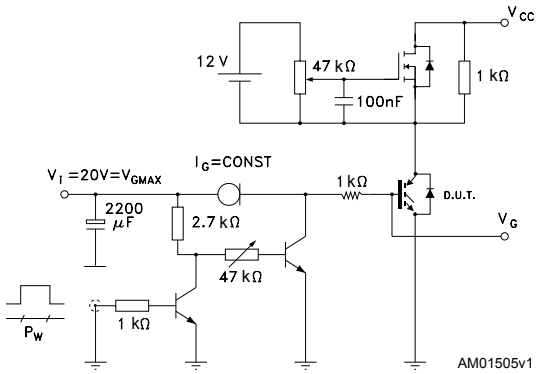

Figure 29. Switching waveform

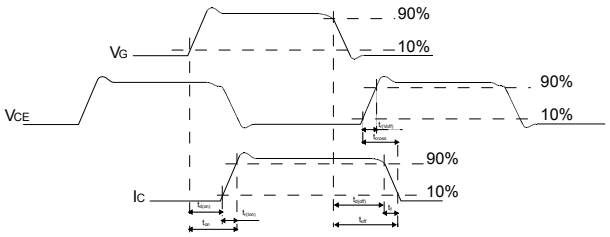

Figure 30. Diode reverse recovery waveform

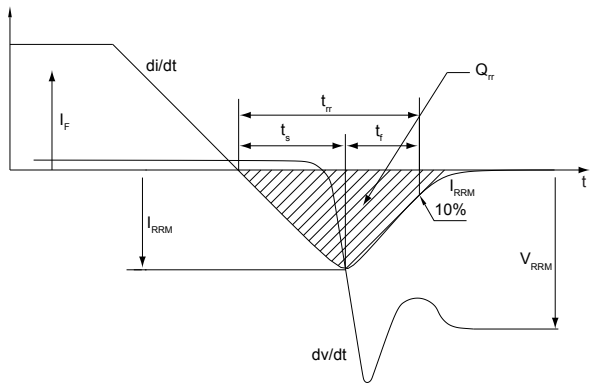

4 Package information

To meet environmental requirements, ST offers these devices in different grades of ECOPACK packages, depending on their level of environmental compliance. ECOPACK specifications, grade definitions, and product status are available at: www.st.com. ECOPACK is an ST trademark.

4.1 D²PAK (TO-263) type A2 package information

Figure 31. D²PAK (TO-263) type A2 package outline

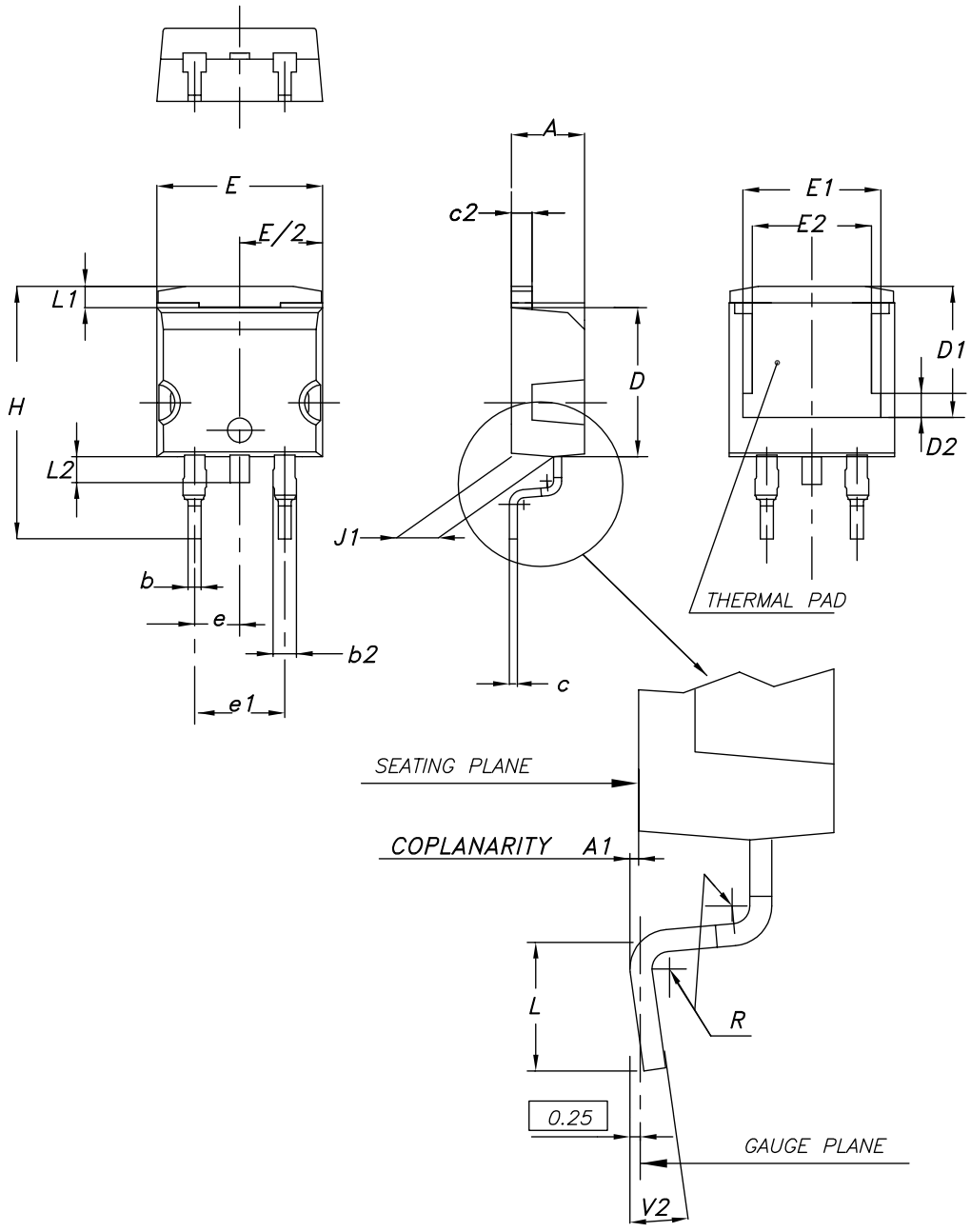

0079457_A2_27

Table 7. D²PAK (TO-263) type A2 package mechanical data

Dim.	mm		
	Min.	Typ.	Max.
A	4.40		4.60
A1	0.03		0.23
b	0.70		0.93
b2	1.14		1.70
c	0.45		0.60
c2	1.23		1.36
D	8.95		9.35
D1	7.50	7.75	8.00
D2	1.10	1.30	1.50
E	10.00		10.40
E1	8.70	8.90	9.10
E2	7.30	7.50	7.70
e		2.54	
e1	4.88		5.28
H	15.00		15.85
J1	2.49		2.69
L	2.29		2.79
L1	1.27		1.40
L2	1.30		1.75
R		0.40	
V2	0°		8°

Figure 32. D²PAK (TO-263) recommended footprint (dimensions are in mm)

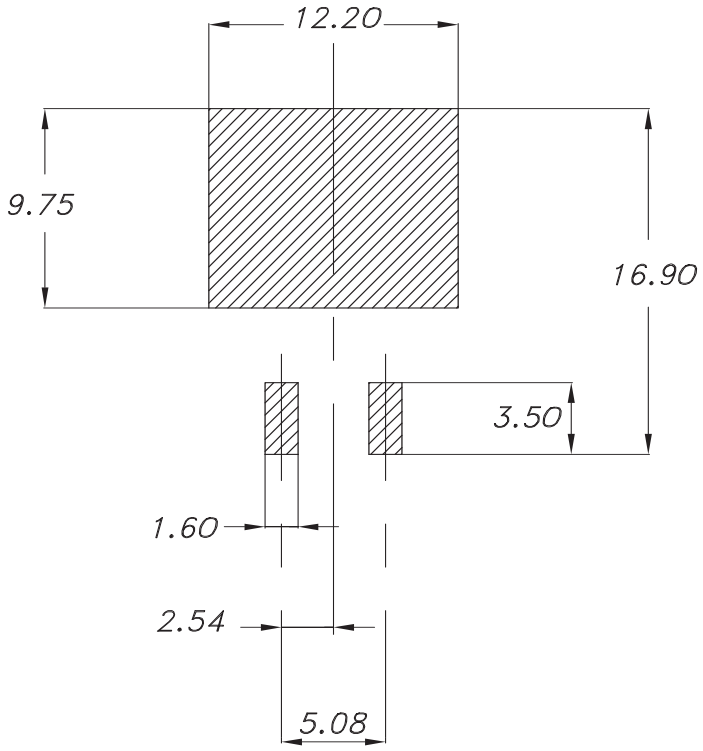

4.2 D²PAK packing information

Figure 33. D²PAK tape drawing (dimensions are in mm)

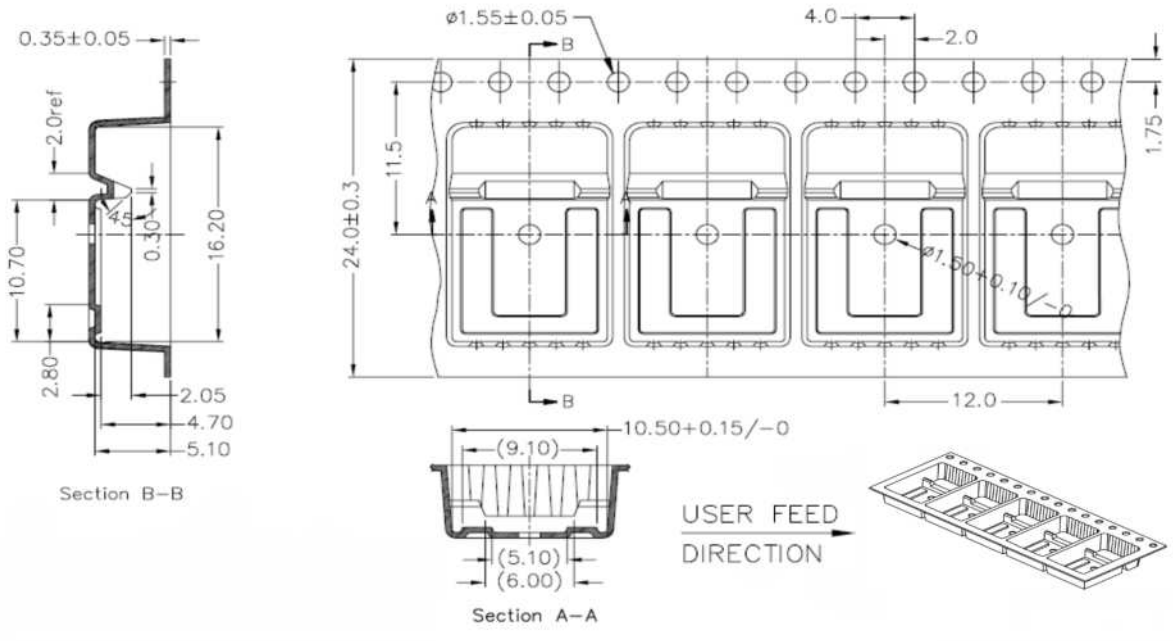

4.3 TO-220 type A package information

Figure 34. **TO-220 type A package outline**

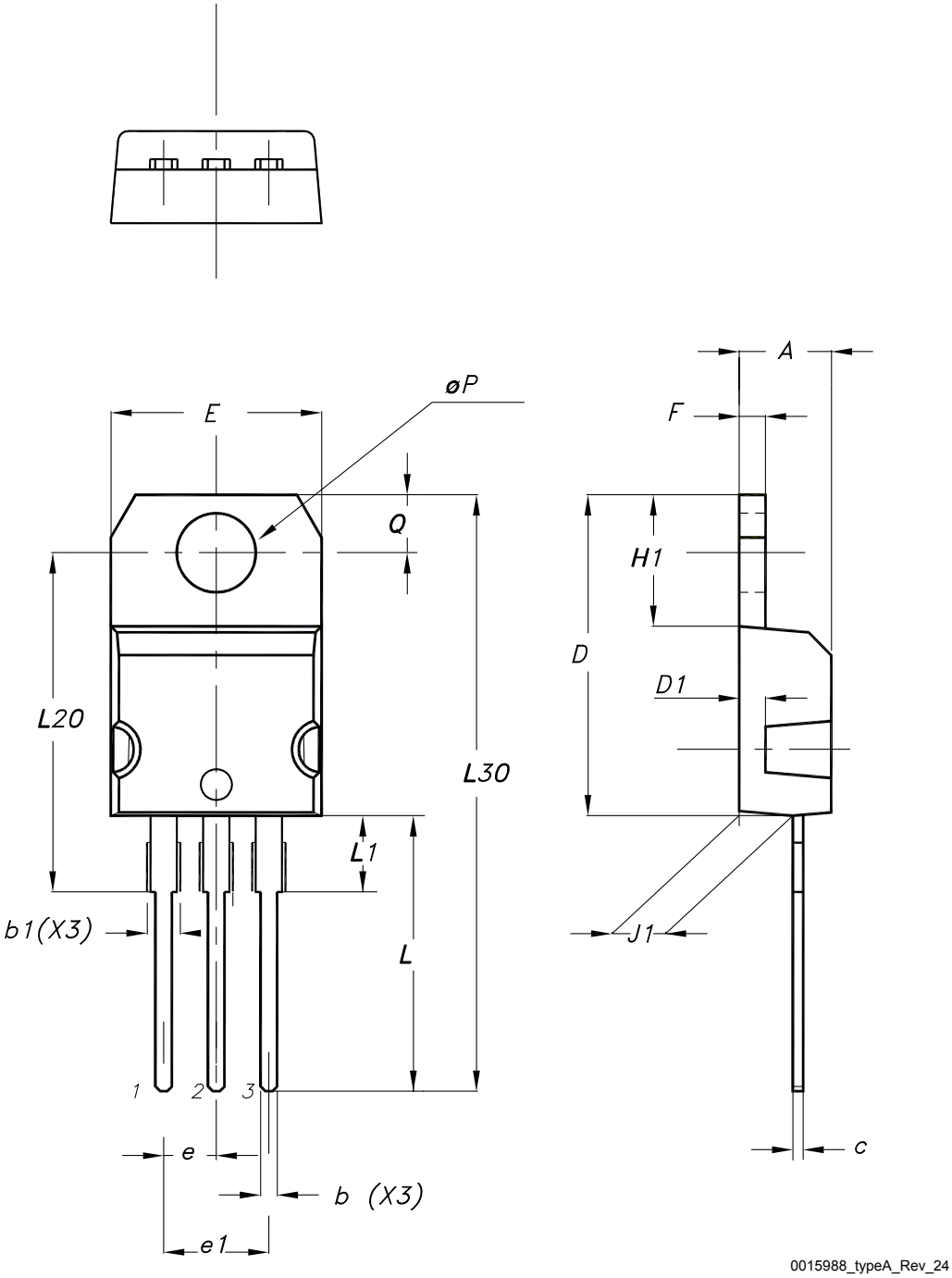

Table 8. **TO-220 type A package mechanical data**

Dim.	mm		
	Min.	Typ.	Max.
A	4.40		4.60
b	0.61		0.88
b1	1.14		1.55
c	0.48		0.70
D	15.25		15.75
D1		1.27	
E	10.00		10.40
e	2.40		2.70
e1	4.95		5.15
F	1.23		1.32
H1	6.20		6.60
J1	2.40		2.72
L	13.00		14.00
L1	3.50		3.93
L20		16.40	
L30		28.90	
øP	3.75		3.85
Q	2.65		2.95
Slug flatness		0.03	0.10

5 Ordering information

Table 9. **Order codes**

Order code	Marking	Package	Packing
STGB30H60DFB	GB30H60DFB	D²PAK	Tape and reel
STGP30H60DFB	GP30H60DFB	TO-220	Tube

Revision history

Table 10. **Document revision history**

Date	Revision	Changes
07-Aug-2014	1	Initial release.
28-Oct-2015	2	Updated *Figure 23* and *Section 5*. Minor text changes.
23-May-2019	3	Modified *Figure 3. Output characteristics (T_J = 25 °C)*, *Figure 4. Output characteristics (T_J = 175 °C)*, *Figure 9. Transfer characteristics*, *Figure 7. Collector current vs switching frequency*, *Figure 18. Switching energy vs collector emitter voltage*. Minor text changes.
05-May-2025	4	Updated Section 4: Package information.

Contents

1 **Electrical ratings** 2
2 **Electrical characteristics** 3
2.1 Electrical characteristics (curves) 5
3 **Test circuits** 10
4 **Package information** 11
4.1 D²PAK (TO-263) type A2 package information 11
4.2 D²PAK packing information 13
4.3 TO-220 type A package information 14
5 **Ordering information** 16
Revision history 17

IMPORTANT NOTICE – READ CAREFULLY

STMicroelectronics NV and its subsidiaries (“ST”) reserve the right to make changes, corrections, enhancements, modifications, and improvements to ST products and/or to this document at any time without notice. Purchasers should obtain the latest relevant information on ST products before placing orders. ST products are sold pursuant to ST’s terms and conditions of sale in place at the time of order acknowledgment.

Purchasers are solely responsible for the choice, selection, and use of ST products and ST assumes no liability for application assistance or the design of purchasers’ products.

No license, express or implied, to any intellectual property right is granted by ST herein.

Resale of ST products with provisions different from the information set forth herein shall void any warranty granted by ST for such product.

ST and the ST logo are trademarks of ST. For additional information about ST trademarks, refer to www.st.com/trademarks. All other product or service names are the property of their respective owners.

Information in this document supersedes and replaces information previously supplied in any prior versions of this document.

© 2025 STMicroelectronics – All rights reserved