STGB5H60DF, STGD5H60DF
STGF5H60DF, STGP5H60DF

Datasheet

Trench gate field-stop 600 V, 5 A high speed H series IGBT

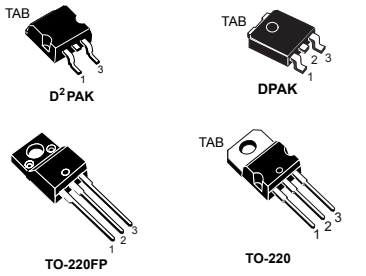

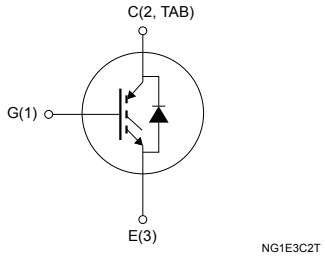

Features

- High-speed switching
- Tight parameter distribution
- Safe paralleling
- Low thermal resistance
- Short-circuit rated
- Ultrafast soft recovery antiparallel diode

Applications

- Motor control
- UPS
- PFC

Description

These devices are IGBTs developed using an advanced proprietary trench gate field-stop structure. These devices are part of the H series of IGBTs, which represents an optimum compromise between conduction and switching losses to maximize the efficiency of high switching frequency converters. Furthermore, a slightly positive $V_{CE(sat)}$ temperature coefficient and very tight parameter distribution result in safer paralleling operation.

Product status link
STGB5H60DF
STGD5H60DF
STGF5H60DF
STGP5H60DF

1 Electrical ratings

Table 1. Absolute maximum ratings

Symbol	Parameter	Value			Unit
		D^2PAK, TO-220	DPAK	TO-220FP	
V_{CES}	Collector-emitter voltage (V_{GE} = 0)	600			V
I_C	Continuous collector current at T_C = 25 °C	10		10(1)	A
	Continuous collector current at T_C = 100 °C	5		5(1)	
I_{CP}(2)	Pulsed collector current	20		20(1)	A
V_{GE}	Gate-emitter voltage	±20			V
I_F	Continuous forward current T_C = 25 °C	10		10(1)	A
	Continuous forward current at T_C = 100 °C	5		5(1)	
I_{FP}(2)	Pulsed forward current	20		20(1)	A
V_{ISO}	Insulation withstand voltage (RMS) from all three leads to external heat sink (t = 1 s; T_c = 25 °C)			2500	V
P_{TOT}	Total power dissipation at T_C = 25 °C	88	83	24	W
T_{STG}	Storage temperature range	-55 to 150			°C
T_J	Operating junction temperature range	-55 to 175			

1. *Limited by maximum junction temperature.*
2. *Pulse width limited by maximum junction temperature.*

Table 2. Thermal data

Symbol	Parameter	Value			Unit
		D^2PAK, TO-220	DPAK	TO-220FP	
R_{thJC}	Thermal resistance junction-case IGBT	1.7	1.8	6.2	°C/W
R_{thJC}	Thermal resistance junction-case diode	4	4.5	7	°C/W
R_{thJA}	Thermal resistance junction-ambient	62.5	100	62.5	°C/W

2 Electrical characteristics

T_C = 25 °C unless otherwise specified.

Table 3. Static

Symbol	Parameter	Test conditions	Min.	Typ.	Max.	Unit
$V_{(BR)CES}$	Collector-emitter breakdown voltage	V_{GE} = 0 V, I_C = 2 mA	600			V
$V_{CE(sat)}$	Collector-emitter saturation voltage	V_{GE} = 15 V, I_C= 5 A		1.5	1.95	V
		V_{GE} = 15 V, I_C = 5 A, T_J = 125 °C		1.6		
		V_{GE} = 15 V, I_C = 5 A, T_J = 175 °C		1.7		
$V_{GE(th)}$	Gate threshold voltage	V_{CE} = V_{GE}, I_C = 250 µA	4.8	6.2	6.9	V
I_{CES}	Collector cut-off current	V_{CE} = 600 V , V_{GE} = 0 V			25	µA
I_{GES}	Gate-emitter leakage current	V_{GE} = ±20 V , V_{CE} = 0 V			±250	nA

Table 4. Dynamic

Symbol	Parameter	Test conditions	Min.	Typ.	Max.	Unit
C_{ies}	Input capacitance	V_{CE} = 25 V, f = 1 MHz, V_{GE} = 0 V	-	855	-	pF
C_{oes}	Output capacitance			34		
C_{res}	Reverse transfer capacitance			19		
Q_g	Total gate charge	V_{CC} = 480 V, I_C = 5 A, V_{GE} = 0 to 15 V (see Figure 35. Gate charge test circuit)	-	38	-	nC
Q_{ge}	Gate-emitter charge			6.5		
Q_{gc}	Gate-collector charge			17.5		

Table 5. Switching characteristics (inductive load)

Symbol	Parameter	Test conditions	Min.	Typ.	Max.	Unit
$t_{d(on)}$	Turn-on delay time	V_{CE} = 400 V, I_C = 5 A,		30		ns
t_r	Current rise time	R_G = 47 Ω, V_{GE} = 15 V		10.8		
(di/dt)on	Turn-on current slope	(see Figure 34. Test circuit for inductive load switching and Figure 36. Switching waveform)		370		A/µs
$t_{d(on)}$	Turn-on delay time	V_{CE} = 400 V, I_C = 5 A,	-	28	-	ns
t_r	Current rise time	R_G = 47 Ω, V_{GE} = 15 V, T_J = 175 °C		11		
(di/dt)on	Turn-on current slope	(see Figure 34. Test circuit for inductive load switching and Figure 36. Switching waveform)		363		A/µs
$t_{r(Voff)}$	Off voltage rise time	V_{CE} = 400 V, I_C = 5 A,		29		ns
$t_{d(off)}$	Turn-off delay time	R_G = 47 Ω, V_{GE} = 15 V		140		
t_f	Current fall time			95		
$t_{r(Voff)}$	Off voltage rise time	V_{CE} = 400 V, I_C = 5 A,		44		
$t_{d(off)}$	Turn-off delay time	R_G = 47 Ω, V_{GE} = 15 V, T_J = 175 °C		146		
t_f	Current fall time			134		
t_{sc}	Short-circuit withstand time	V_{CC} ≤ 360 V, V_{GE} = 15 V, R_G = 47 Ω	-	5	-	µs

Table 6. Switching energy (inductive load)

Symbol	Parameter	Test conditions	Min.	Typ.	Max.	Unit
E_{on} (1)	Turn-on switching energy	V_{CE} = 400 V, I_C = 5 A,		56		µJ
E_{off} (2)	Turn-off switching energy	R_G = 47 Ω, V_{GE} = 15 V		78.5		
E_{ts}	Total switching energy			134.5		
E_{on} (1)	Turn-on switching energy	V_{CE} = 400 V, I_C = 5 A,	-	87	-	
E_{off} (2)	Turn-off switching energy	R_G = 47 Ω, V_{GE} = 15 V, T_J = 175 °C		134		
E_{ts}	Total switching energy			221		

1. *Including the reverse recovery of the diode.*
2. *Including the tail of the collector current.*

Table 7. Collector-emitter diode

Symbol	Parameter	Test conditions	Min.	Typ.	Max.	Unit
V_F	Forward on-voltage	I_F = 5 A	-	2.1	-	V
		I_F = 5 A, T_J = 175 °C		1.65		
t_{rr}	Reverse recovery time	V_{CC} = 400 V; I_F = 5 A;		134.5		ns
Q_{rr}	Reverse recovery charge	di_F/dt = 100 A / µs		48		nC
I_{rrm}	Reverse recovery current			1.38		A
t_{rr}	Reverse recovery time	V_{CC} = 400 V; I_F = 5 A;	-	157	-	ns
Q_{rr}	Reverse recovery charge	di_F/dt = 100 A / µs, T_J = 175 °C		165		nC
I_{rrm}	Reverse recovery current			2.4		A

2.1 Electrical characteristics (curves)

Figure 1. Power dissipation vs case temperature for D²PAK and TO-220

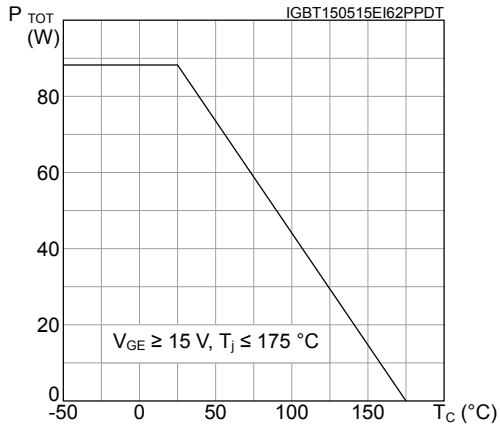

Figure 2. Collector current vs case temperature for D²PAK, DPAK and TO-220

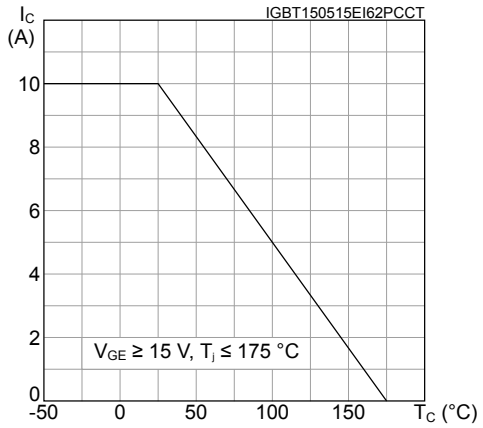

Figure 3. Power dissipation vs case temperature for DPAK

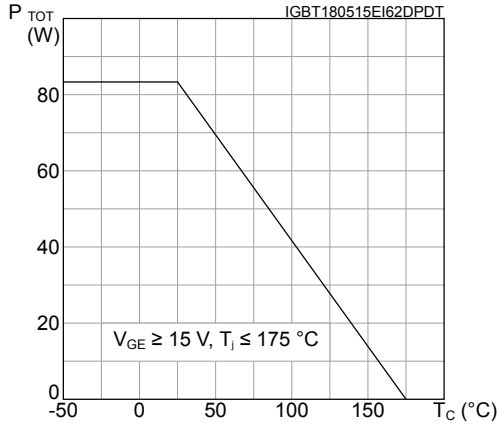

Figure 4. Collector current vs case temperature for DPAK

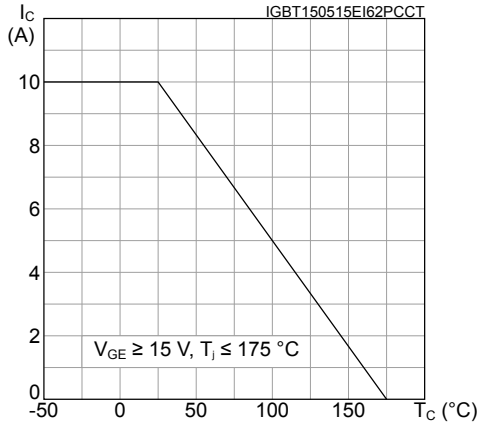

Figure 5. Power dissipation vs case temperature for TO-220FP

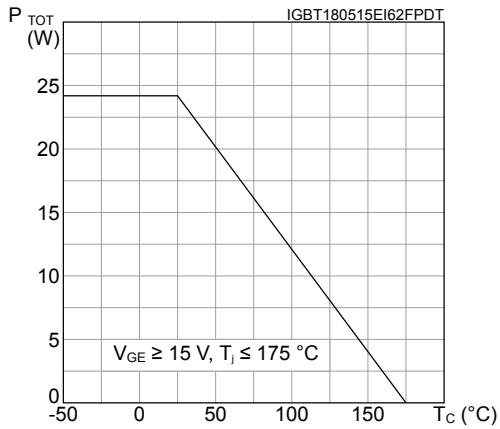

Figure 6. Collector current vs case temperature for TO-220FP

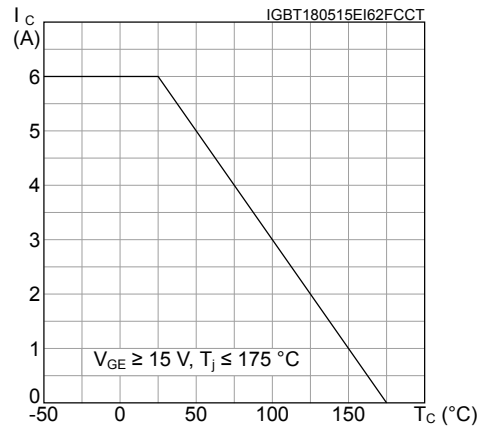

Figure 7. Output characteristics (T_J = 25°C)

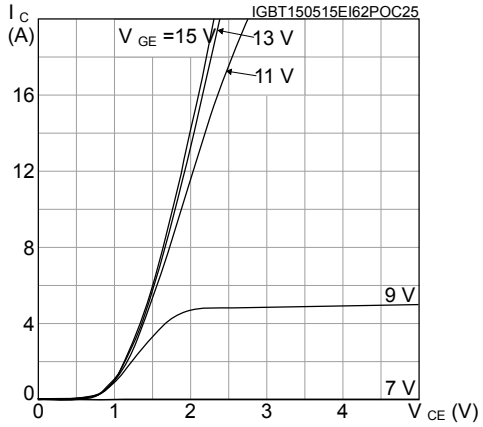

Figure 8. Output characteristics (T_J = 175°C)

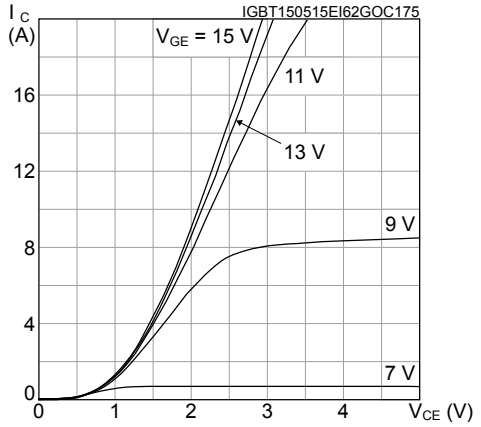

Figure 9. $V_{CE(sat)}$ vs junction temperature

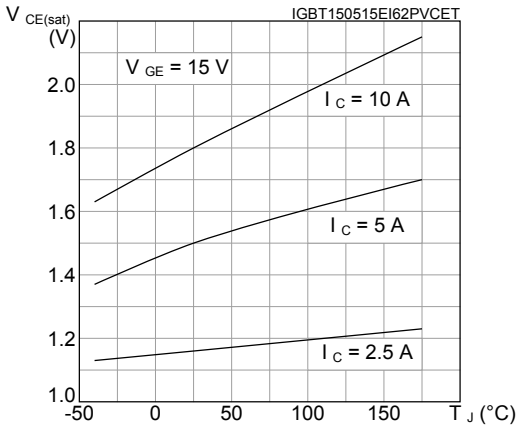

Figure 10. $V_{CE(sat)}$ vs collector current

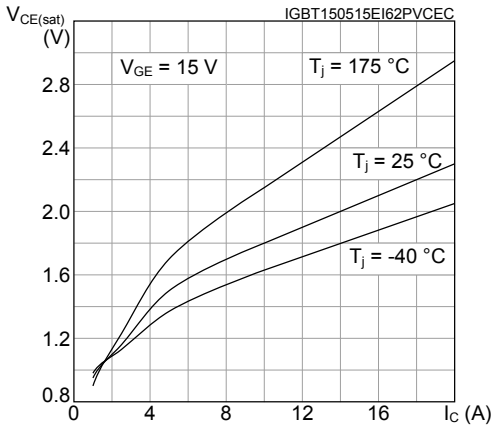

Figure 11. Collector current vs switching frequency for D²PAK, DPAK and TO-220

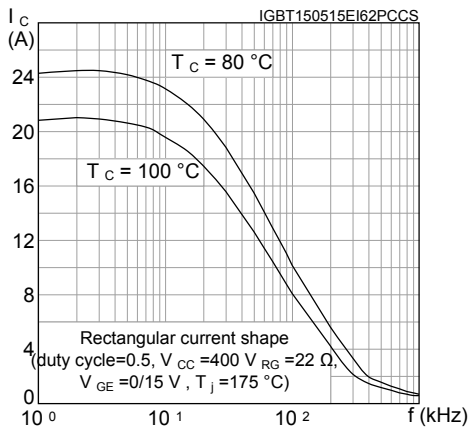

Figure 12. Collector current vs switching frequency for TO-220FP

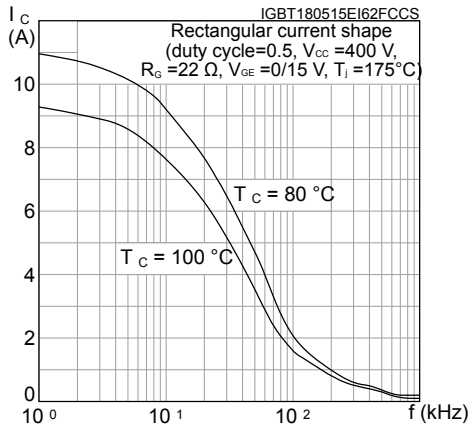

Figure 13. Forward bias safe operating area for D²PAK, DPAK and TO-220

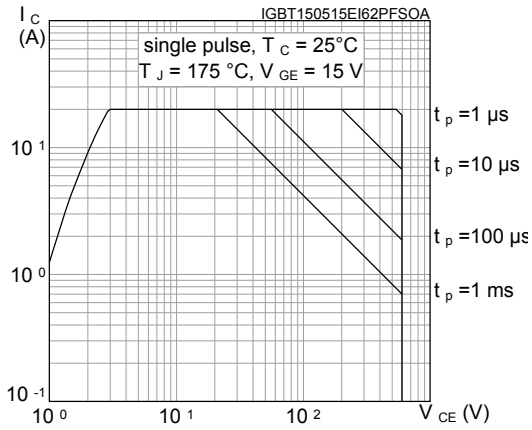

Figure 14. Forward bias safe operating area for TO-220FP

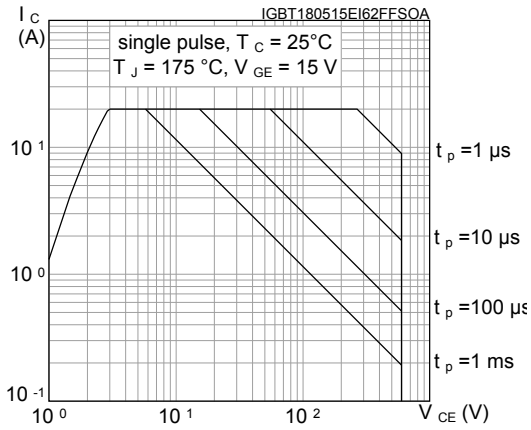

Figure 15. Transfer characteristics

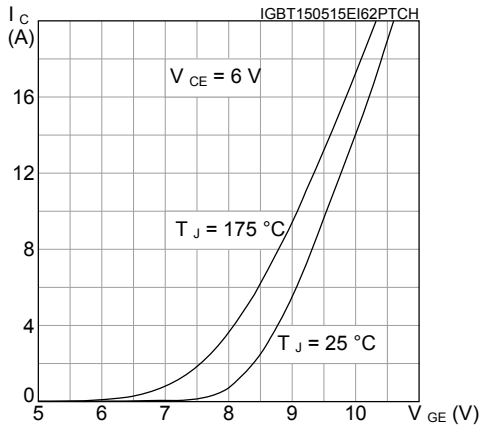

Figure 16. Diode V_F vs forward current

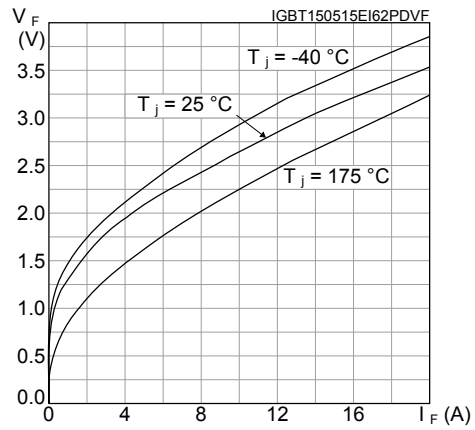

Figure 17. Normalized $V_{GE(th)}$ vs junction temperature

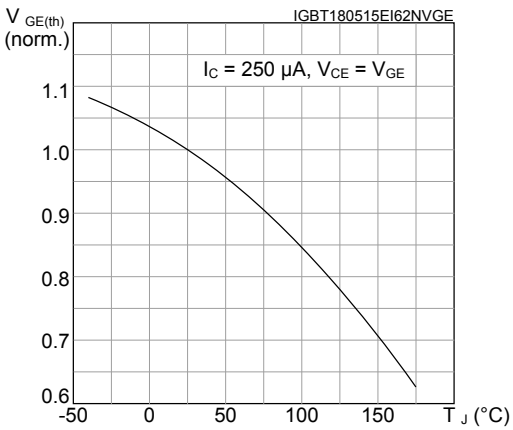

Figure 18. Normalized $V_{(BR)CES}$ vs junction temperature

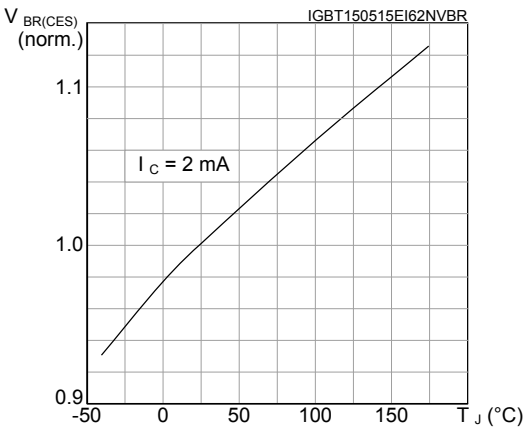

Figure 19. Capacitance variation

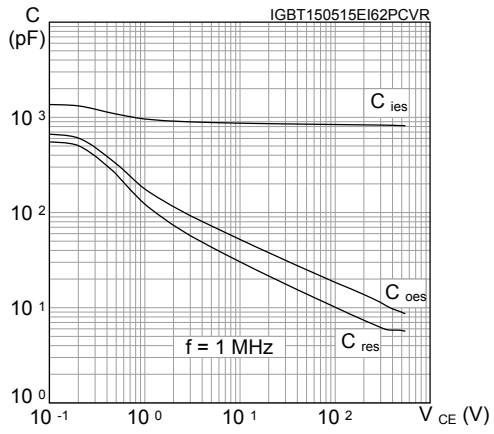

Figure 20. Gate charge vs. gate-emitter voltage

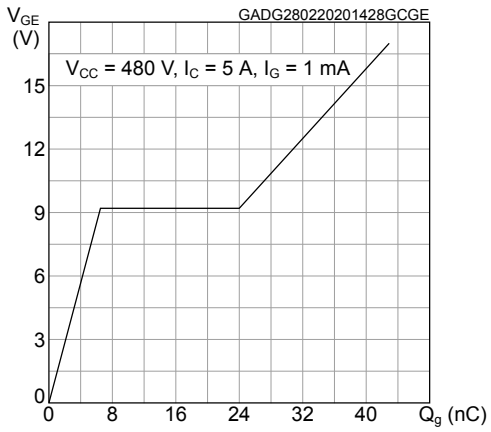

Figure 21. Switching energy vs collector current

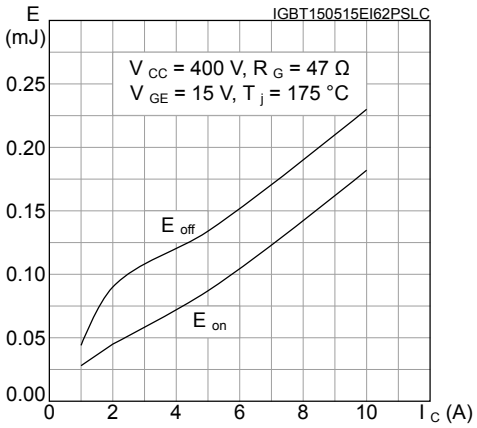

Figure 22. Switching energy vs gate resistance

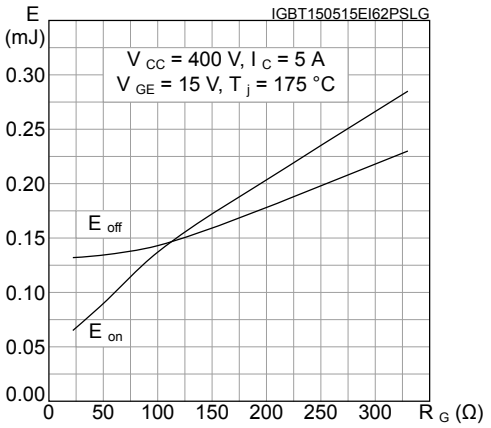

Figure 23. Switching energy vs temperature

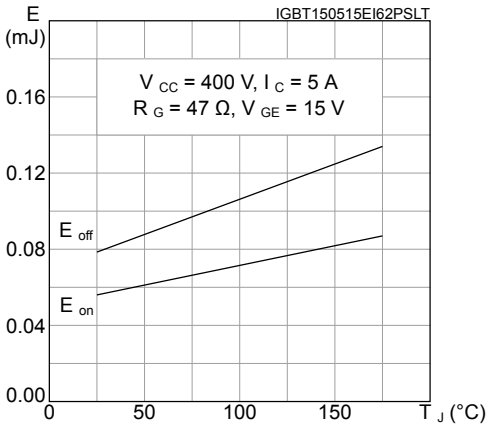

Figure 24. Switching energy vs collector-emitter voltage

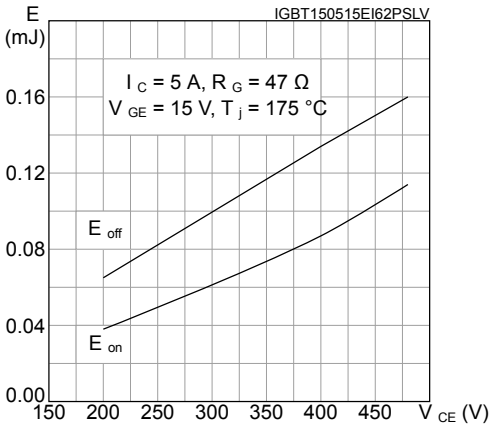

Figure 25. Short circuit time and current vs V_{GE}

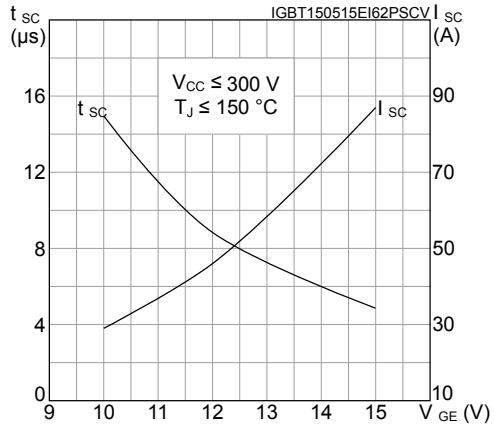

Figure 26. Switching times vs collector current

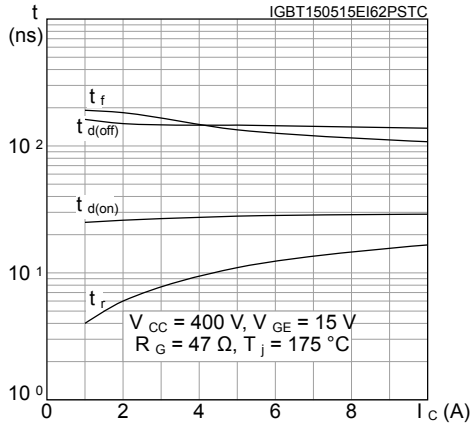

Figure 27. Switching times vs gate resistance

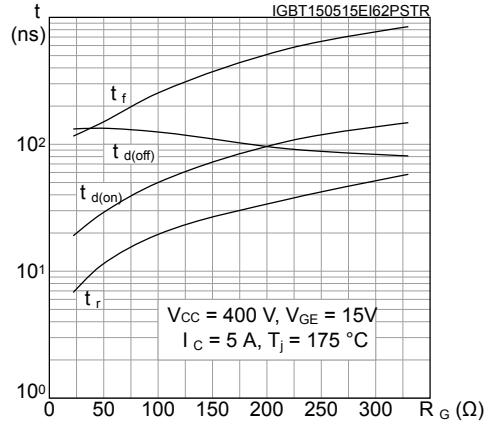

Figure 28. Reverse recovery current vs diode current slope

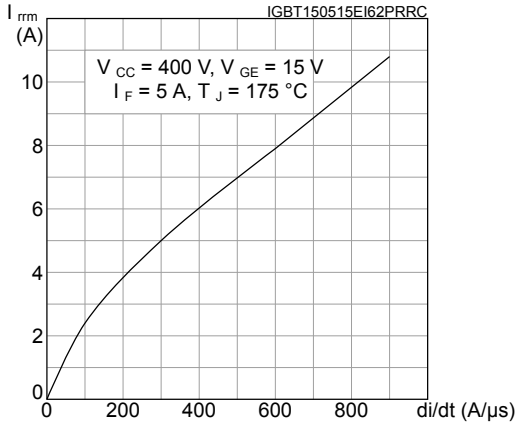

Figure 29. Reverse recovery time vs diode current slope

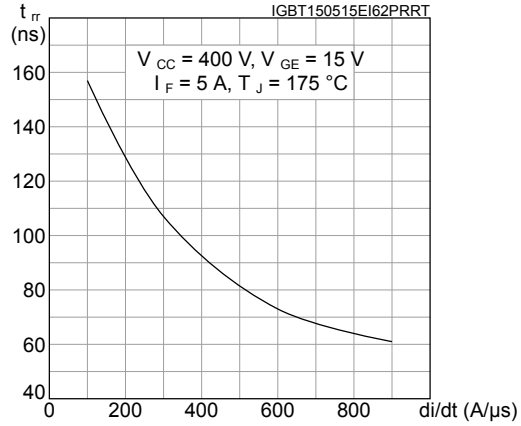

Figure 30. Reverse recovery charge vs diode current slope

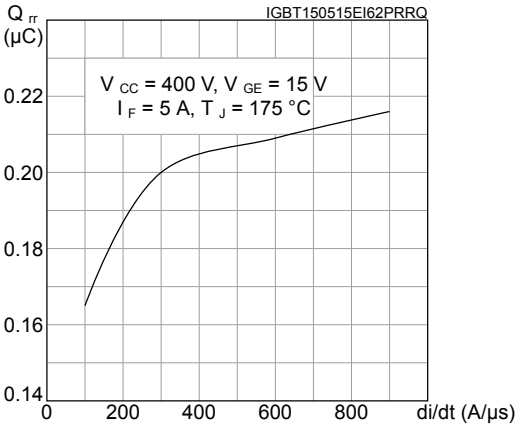

Figure 31. Reverse recovery energy vs diode current slope

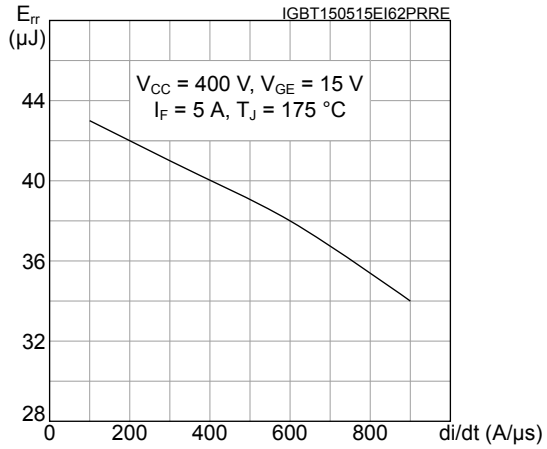

Figure 32. Thermal impedance for D²PAK, DPAK and TO-220 IGBT

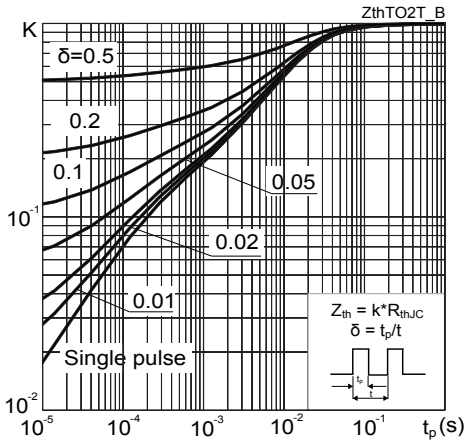

Figure 33. Thermal impedance for D²PAK, DPAK and TO-220 diode

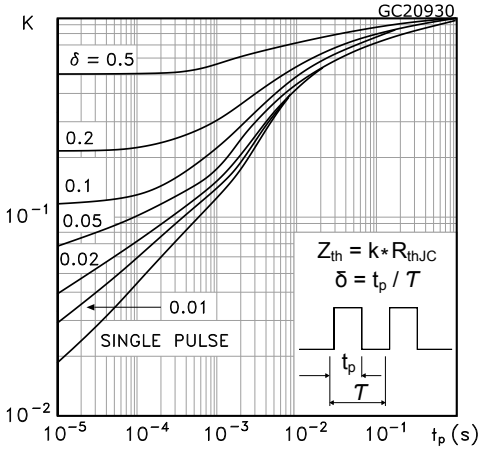

3 Test circuits

Figure 34. Test circuit for inductive load switching

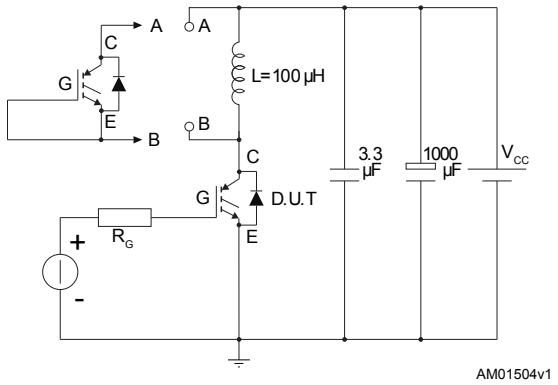

Figure 35. Gate charge test circuit

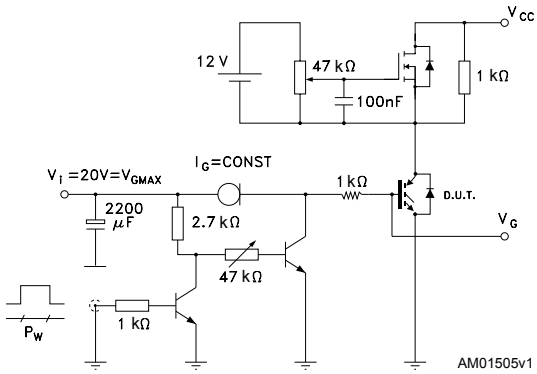

Figure 36. Switching waveform

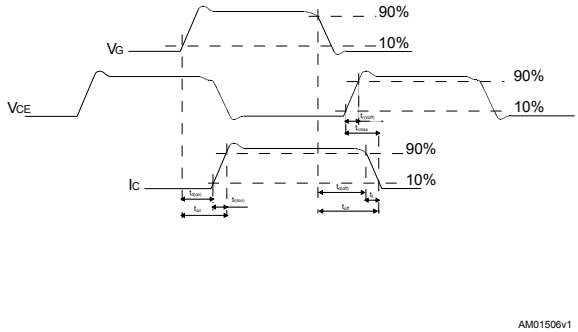

Figure 37. Diode reverse recovery waveform

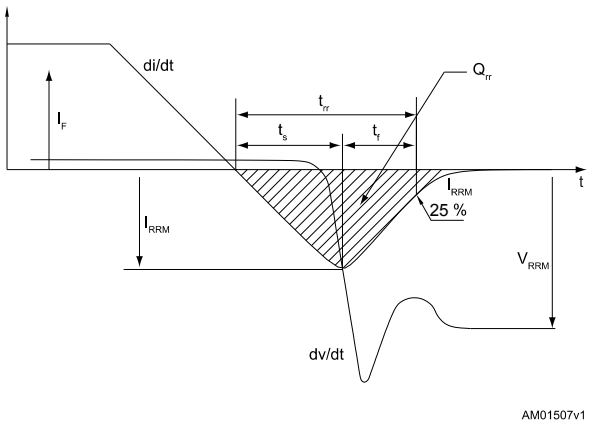

4 Package information

To meet environmental requirements, ST offers these devices in different grades of ECOPACK packages, depending on their level of environmental compliance. ECOPACK specifications, grade definitions, and product status are available at: www.st.com. ECOPACK is an ST trademark.

4.1 D²PAK (TO-263) type A package information

Figure 38. **D²PAK (TO-263) type A package outline**

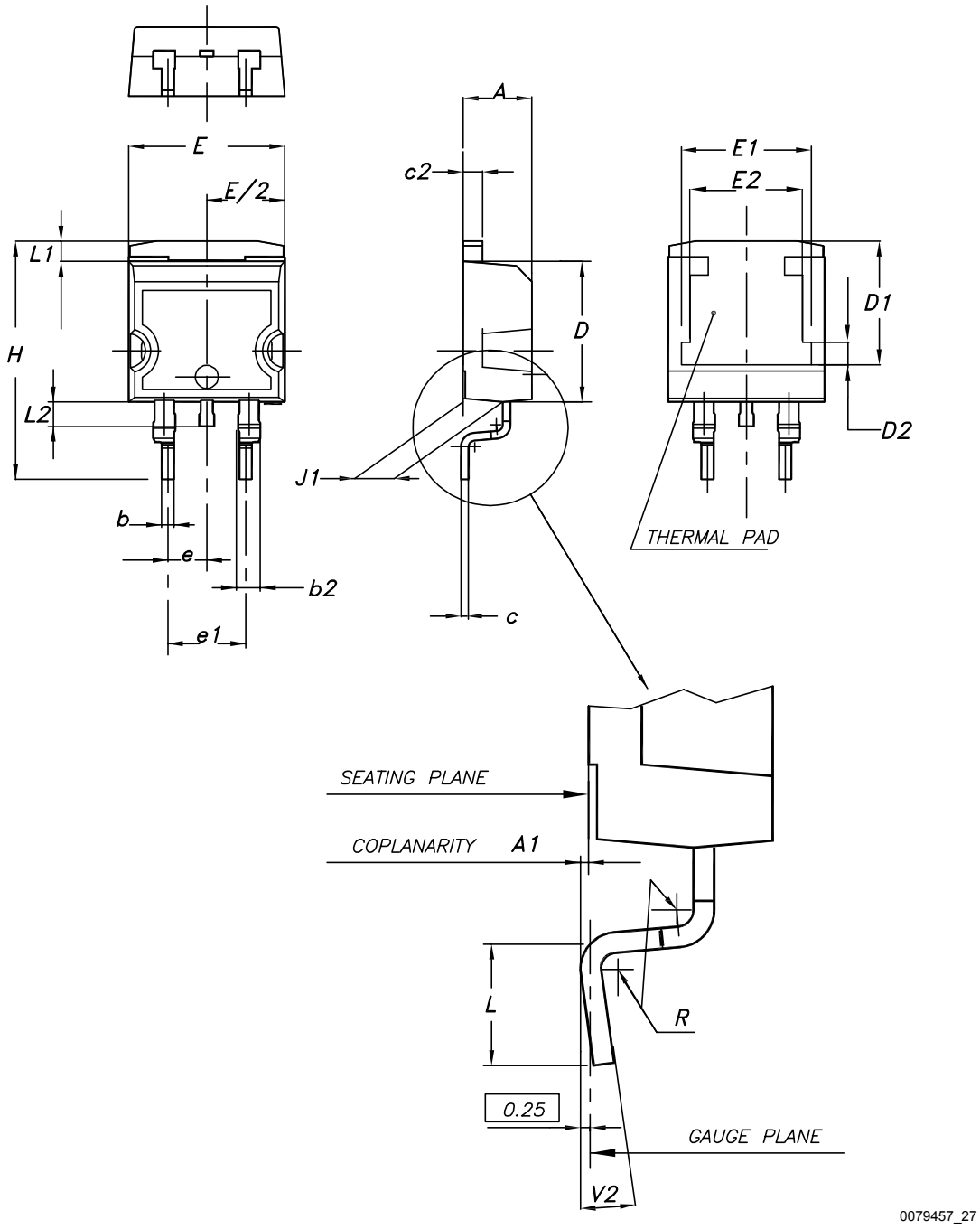

Table 8. D²PAK (TO-263) type A package mechanical data

Dim.	mm		
	Min.	Typ.	Max.
A	4.40		4.60
A1	0.03		0.23
b	0.70		0.93
b2	1.14		1.70
c	0.45		0.60
c2	1.23		1.36
D	8.95		9.35
D1	7.50	7.75	8.00
D2	1.10	1.30	1.50
E	10.00		10.40
E1	8.30	8.50	8.70
E2	6.85	7.05	7.25
e		2.54	
e1	4.88		5.28
H	15.00		15.85
J1	2.49		2.69
L	2.29		2.79
L1	1.27		1.40
L2	1.30		1.75
R		0.40	
V2	0°		8°

Figure 39. D²PAK (TO-263) recommended footprint (dimensions are in mm)

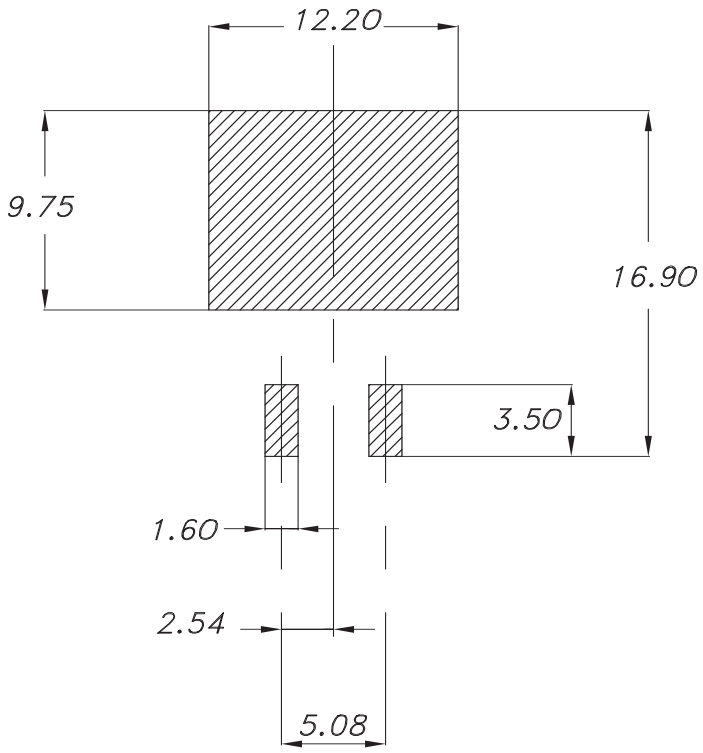

4.2 D²PAK packing information

Figure 40. D²PAK tape drawing (dimensions are in mm)

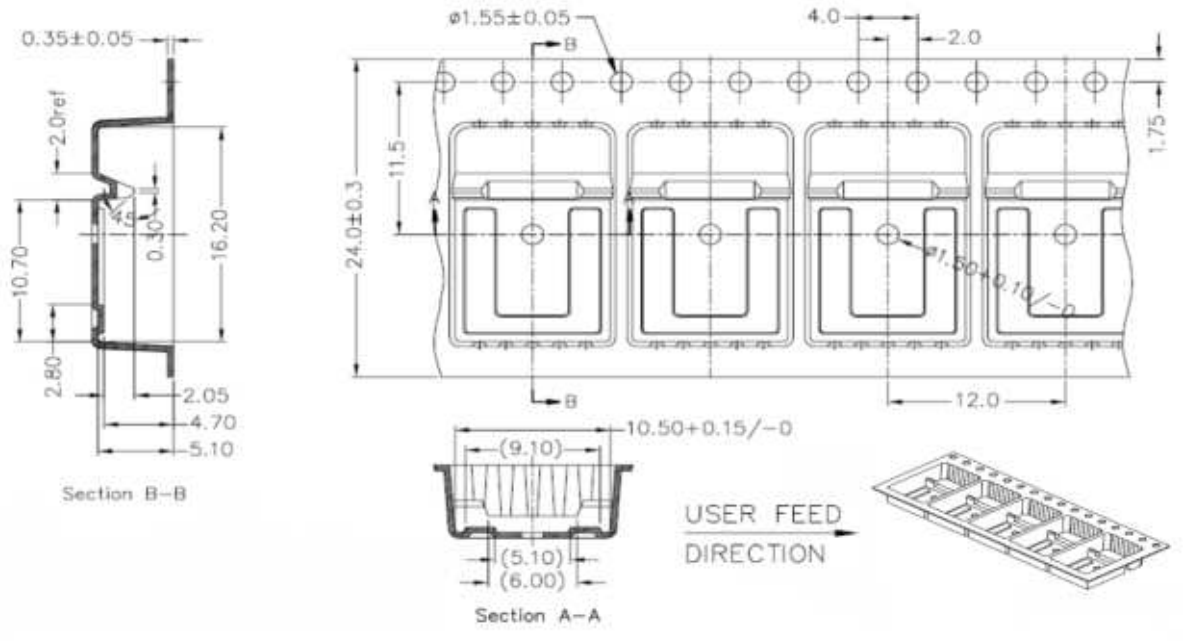

4.3 DPAK (TO-252) type A2 package information

Figure 41. **DPAK (TO-252) type A2 package outline**

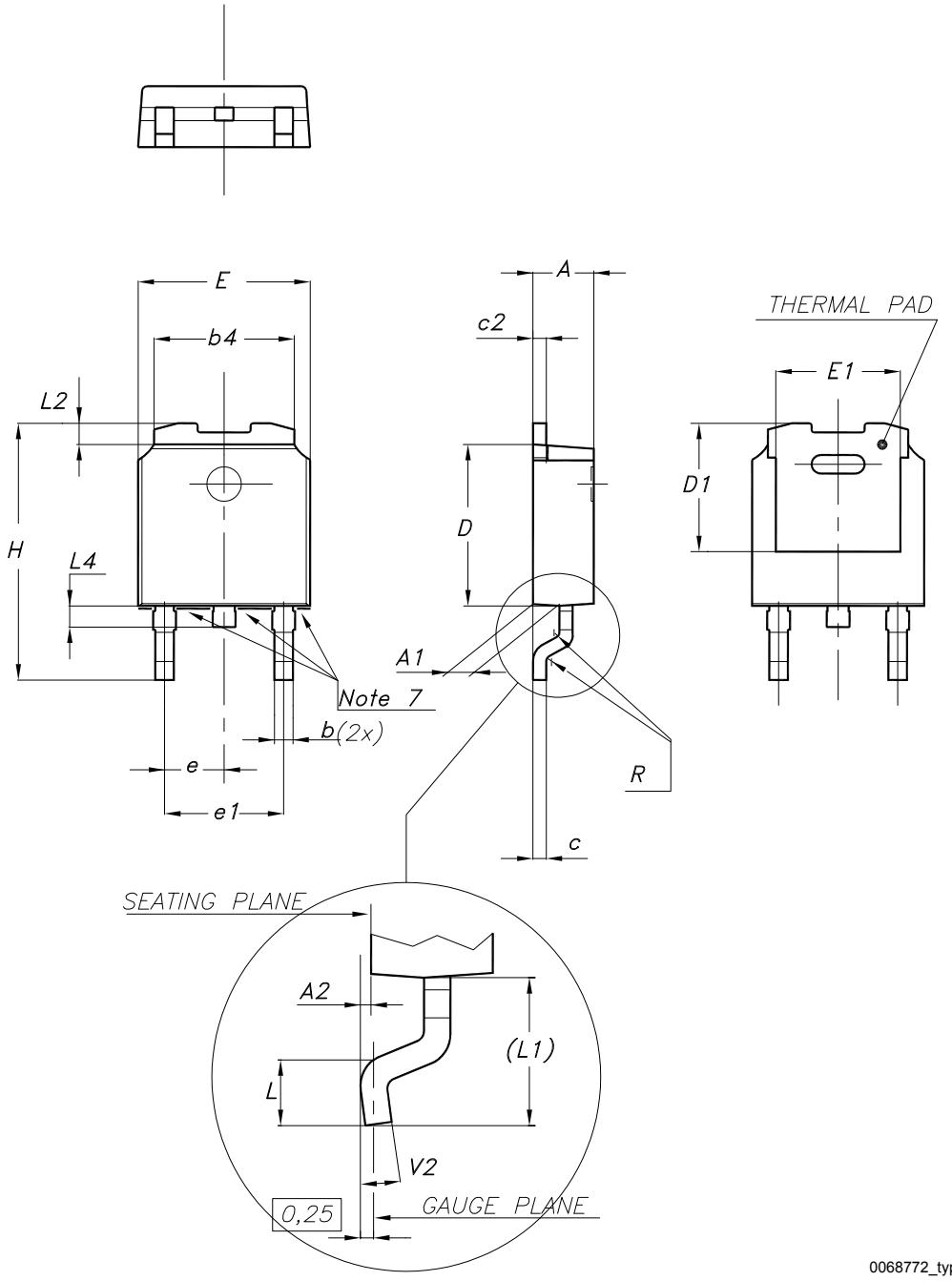

Table 9. **DPAK (TO-252) type A2 mechanical data**

Dim.	mm		
	Min.	Typ.	Max.
A	2.20		2.40
A1	0.90		1.10
A2	0.03		0.23
b	0.64		0.90
b4	5.20		5.40
c	0.45		0.60
c2	0.48		0.60
D	6.00		6.20
D1	4.95	5.10	5.25
E	6.40		6.60
E1	5.10	5.20	5.30
e	2.159	2.286	2.413
e1	4.445	4.572	4.699
H	9.35		10.10
L	1.00		1.50
L1	2.60	2.80	3.00
L2	0.65	0.80	0.95
L4	0.60		1.00
R		0.20	
V2	0°		8°

4.4 DPAK (TO-252) type C2 package information

Figure 42. **DPAK (TO-252) type C2 package outline**

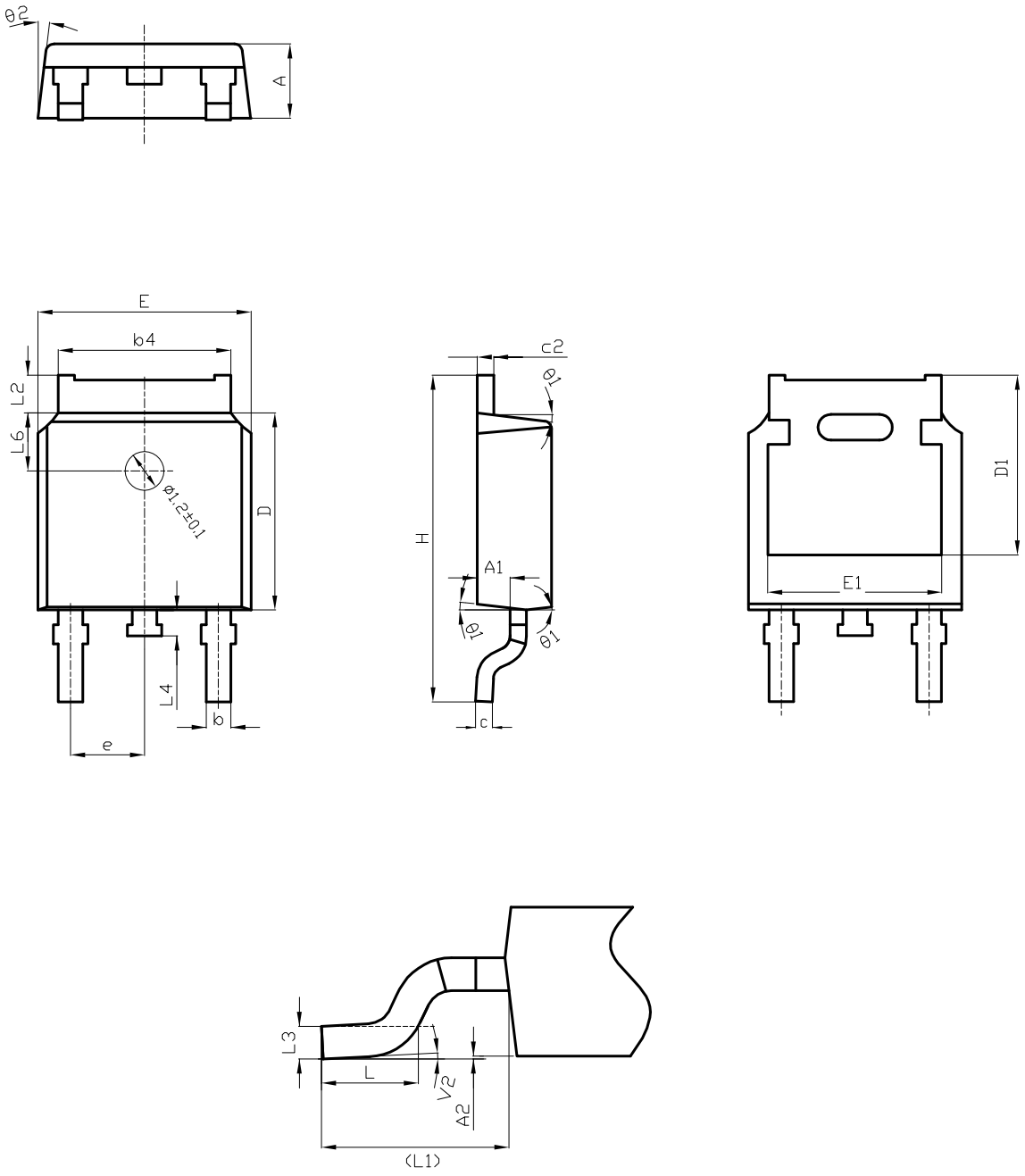

0068772_type-C2_rev34

Table 10. **DPAK (TO-252) type C2 mechanical data**

Dim.	mm		
	Min.	Typ.	Max.
A	2.20	2.30	2.38
A1	0.90	1.01	1.10
A2	0.00		0.10
b	0.72		0.85
b4	5.13	5.33	5.46
c	0.47		0.60
c2	0.47		0.60
D	6.00	6.10	6.20
D1	5.10		5.60
E	6.50	6.60	6.70
E1	5.20		5.50
e	2.186	2.286	2.386
H	9.80	10.10	10.40
L	1.40	1.50	1.70
L1	2.90 REF		
L2	0.90		1.25
L3	0.51 BSC		
L4	0.60	0.80	1.00
L6	1.80 BSC		
θ1	5°	7°	9°
θ2	5°	7°	9°
V2	0°		8°

4.5 DPAK (TO-252) packing information

Figure 43. **DPAK (TO-252) tape outline**

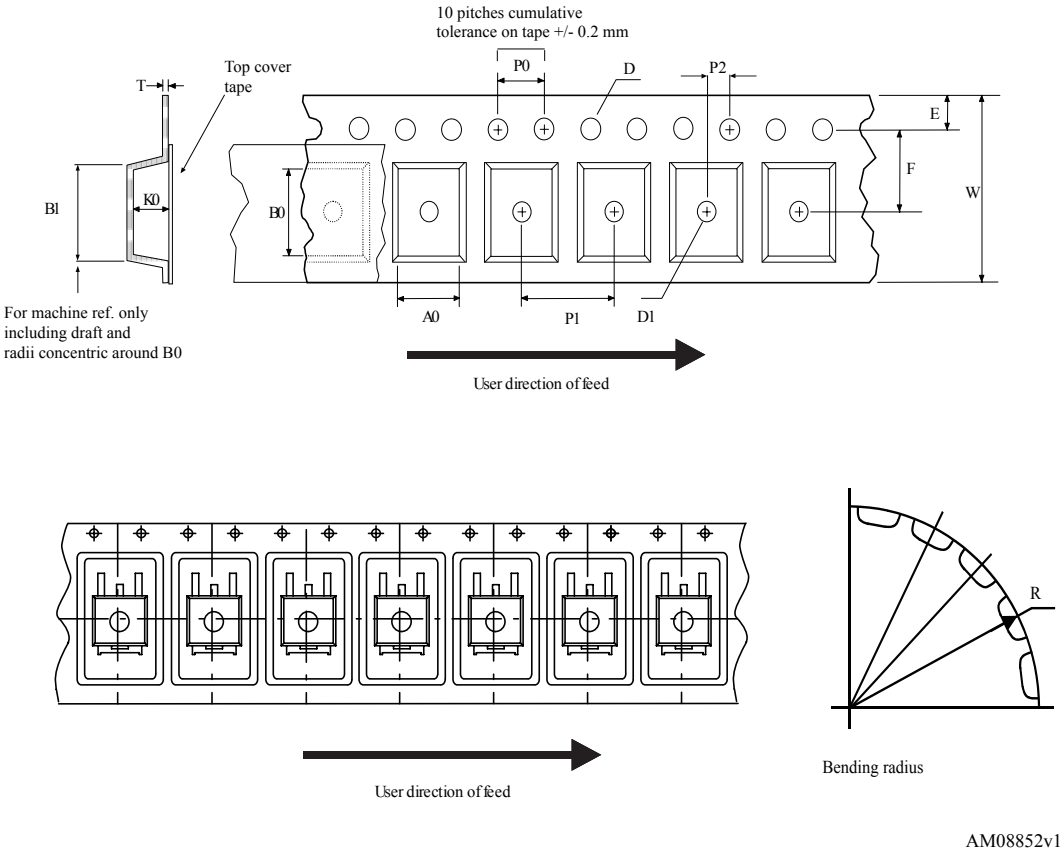

AM08852v1

Figure 44. **DPAK (TO-252) reel outline**

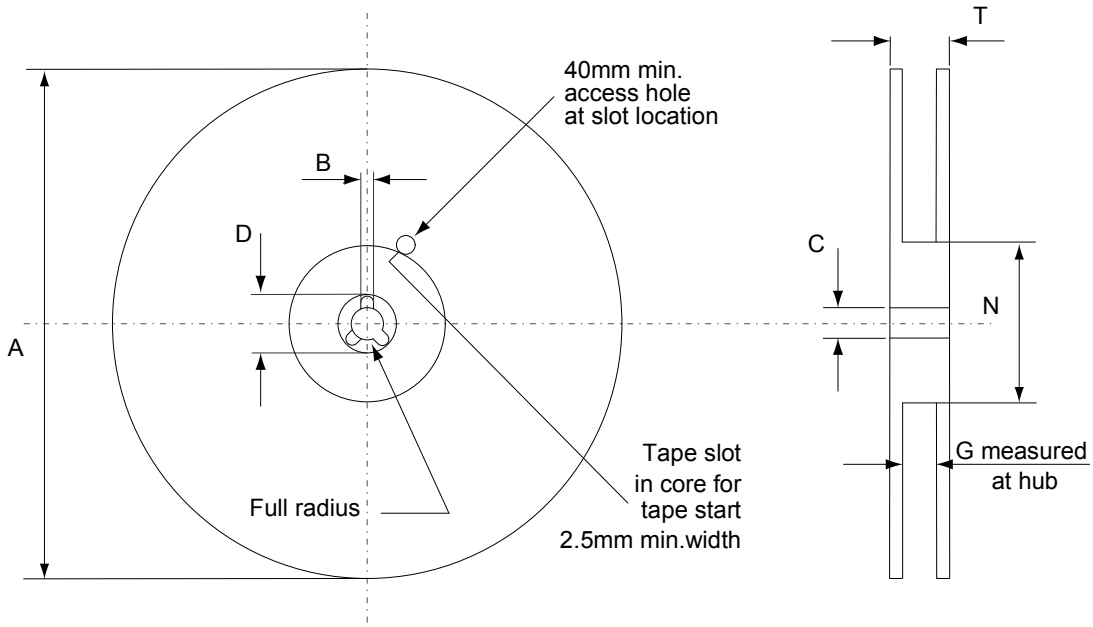

AM06038v1

Table 11. **DPAK (TO-252) tape and reel mechanical data**

Tape			Reel		
Dim.	mm		Dim.	mm	
	Min.	Max.		Min.	Max.
A0	6.8	7	A		330
B0	10.4	10.6	B	1.5	
B1		12.1	C	12.8	13.2
D	1.5	1.6	D	20.2	
D1	1.5		G	16.4	18.4
E	1.65	1.85	N	50	
F	7.4	7.6	T		22.4
K0	2.55	2.75			
P0	3.9	4.1	Base qty.		2500
P1	7.9	8.1	Bulk qty.		2500
P2	1.9	2.1			
R	40				
T	0.25	0.35			
W	15.7	16.3			

4.6 TO-220FP type B package information

Figure 45. **TO-220FP type B package outline**

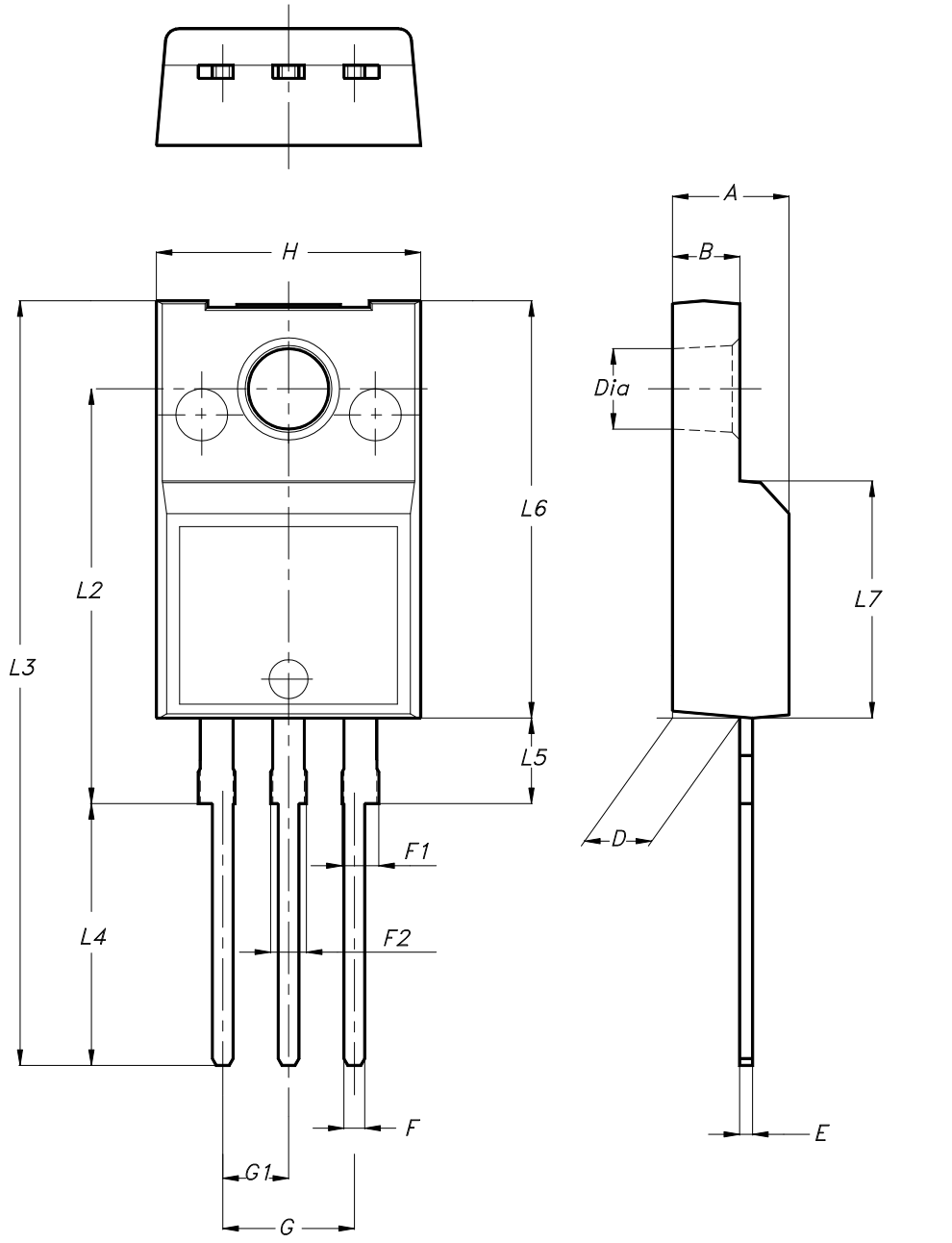

Table 12. **TO-220FP type B package mechanical data**

Dim.	mm		
	Min.	Typ.	Max.
A	4.40		4.60
B	2.50		2.70
D	2.50		2.75
E	0.45		0.70
F	0.75		1.00
F1	1.15		1.70
F2	1.15		1.70
G	4.95		5.20
G1	2.40		2.70
H	10.00		10.40
L2		16.00	
L3	28.60		30.60
L4	9.80		10.60
L5	2.90		3.60
L6	15.90		16.40
L7	9.00		9.30
Dia	3.00		3.20

4.7 TO-220 type A package information

Figure 46. **TO-220 type A package outline**

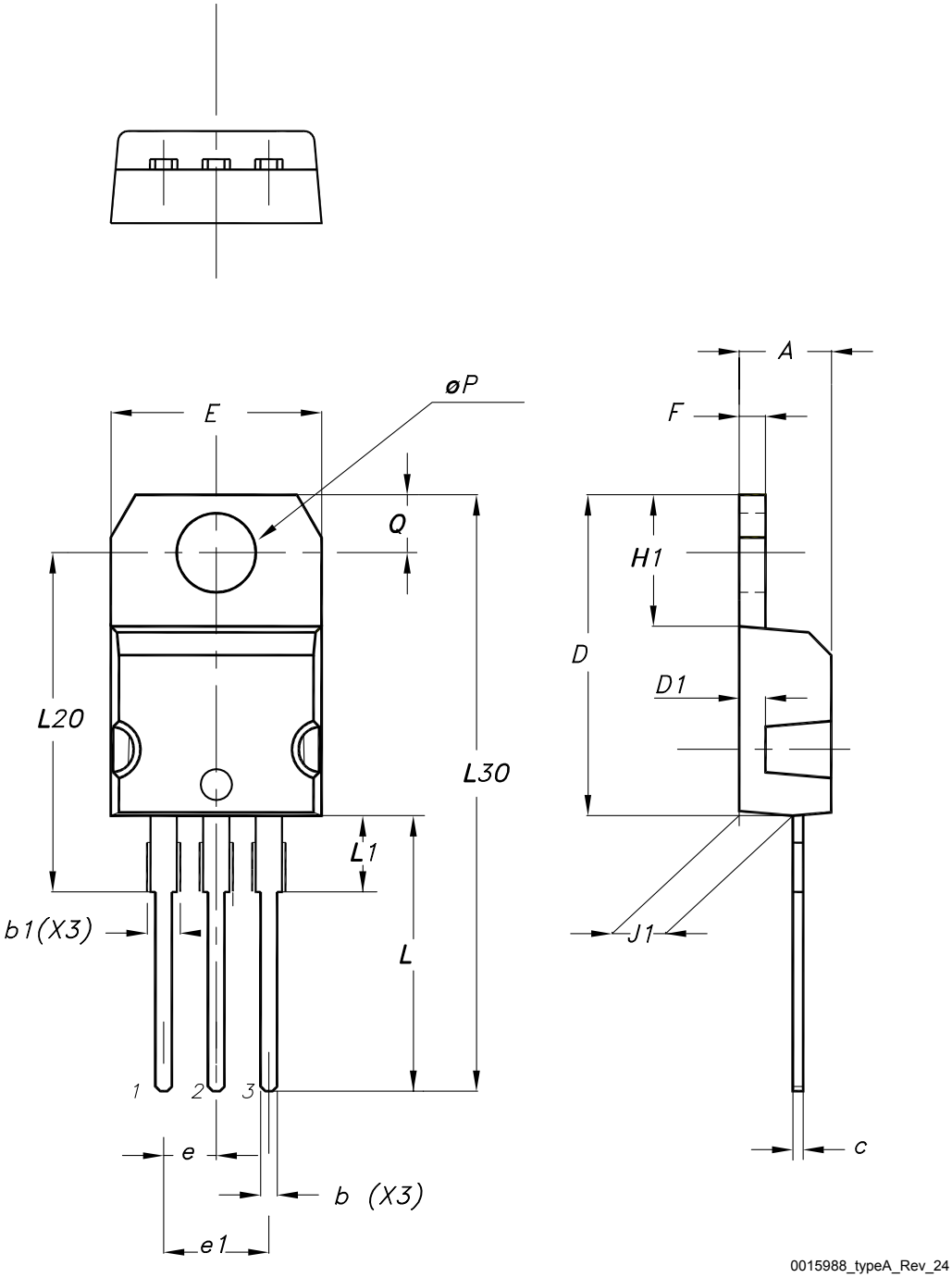

Table 13. **TO-220 type A package mechanical data**

Dim.	mm		
	Min.	Typ.	Max.
A	4.40		4.60
b	0.61		0.88
b1	1.14		1.55
c	0.48		0.70
D	15.25		15.75
D1		1.27	
E	10.00		10.40
e	2.40		2.70
e1	4.95		5.15
F	1.23		1.32
H1	6.20		6.60
J1	2.40		2.72
L	13.00		14.00
L1	3.50		3.93
L20		16.40	
L30		28.90	
øP	3.75		3.85
Q	2.65		2.95
Slug flatness		0.03	0.10

5 Ordering information

Table 14. **Order codes**

Order code	Marking	Package	Packing
STGB5H60DF	GB5H60DF	D^2PAK	Tape and reel
STGD5H60DF	GD5H60DF	DPAK	
STGF5H60DF	GF5H60DF	TO-220FP	Tube
STGP5H60DF	GP5H60DF	TO-220	

Revision history

Table 15. **Document revision history**

Date	Version	Changes
28-Nov-2014	1	Initial release.
23-Feb-2015	2	Updated *Section 2: Electrical characteristics* and *Section 4: Package information*. Minor text changes.
18-May-2015	3	Text and formatting changes throughout document In *Section 1: Electrical ratings:* - updated *Table 2* and *Table 3* In *Section 2: Electrical characteristics:* - updated *Table 4, Table 5, Table 6, Table 7* and *Table 8* Added *Section 2.1: Electrical characteristics (curves)* Updated *Section 4.2: DPAK package information* Document status promoted from “preliminary data” to “production data”
18-Sep-2018	4	Removed maturity status indication from cover page. Updated *Section 4 Package information*. Minor text changes.
02-Mar-2020	5	Updated *Table 4. Dynamic*. Updated *Figure 20. Gate charge vs. gate-emitter voltage*. Minor text changes.
14-May-2025	6	Updated Section 4: Package information.

Contents

1 **Electrical ratings** 2
2 **Electrical characteristics** 3
2.1 Electrical characteristics (curves) 5
3 **Test circuits** 11
4 **Package information** 12
4.1 D²PAK (TO-263) type A package information 12
4.2 D²PAK packing information 14
4.3 DPAK (TO-252) type A2 package information 15
4.4 DPAK (TO-252) type C2 package information 17
4.5 DPAK (TO-252) packing information 19
4.6 TO-220FP type B package information 21
4.7 TO-220 type A package information 23
5 **Ordering information** 25
Revision history 26

IMPORTANT NOTICE – READ CAREFULLY

STMicroelectronics NV and its subsidiaries (“ST”) reserve the right to make changes, corrections, enhancements, modifications, and improvements to ST products and/or to this document at any time without notice. Purchasers should obtain the latest relevant information on ST products before placing orders. ST products are sold pursuant to ST’s terms and conditions of sale in place at the time of order acknowledgment.

Purchasers are solely responsible for the choice, selection, and use of ST products and ST assumes no liability for application assistance or the design of purchasers’ products.

No license, express or implied, to any intellectual property right is granted by ST herein.

Resale of ST products with provisions different from the information set forth herein shall void any warranty granted by ST for such product.

ST and the ST logo are trademarks of ST. For additional information about ST trademarks, refer to www.st.com/trademarks. All other product or service names are the property of their respective owners.

Information in this document supersedes and replaces information previously supplied in any prior versions of this document.

© 2025 STMicroelectronics – All rights reserved