STD110N8F6

N-channel 80 V, 0.0056 Ω typ.,80 A, STripFET™ F6 Power MOSFET in a DPAK package

Datasheet - production data

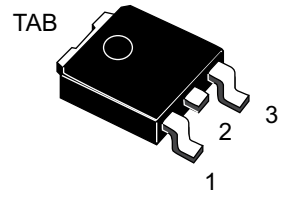

DPAK

Figure 1. Internal schematic diagram

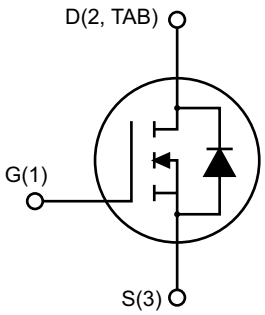

Features

Order code	V_{DS}	$R_{DS(on)max}$	I_D	P_{TOT}
STD110N8F6	80 V	0.0065 Ω	80 A	167 W

- Very low on-resistance
- Very low gate charge
- High avalanche ruggedness
- Low gate drive power loss

Applications

- Switching applications

Description

This device is an N-channel Power MOSFET developed using the STripFET™ F6 technology with a new trench gate structure. The resulting Power MOSFET exhibits very low $R_{DS(on)}$ in all packages.

Table 1. Device summary

Order code	Marking	Package	Packing
STD110N8F6	110N8F6	DPAK	Tube

This is information on a product in full production. www.st.com

Contents

1 Electrical ratings 3

2 Electrical characteristics 4

2.1 Electrical characteristics (curves) 6

3 Test circuits 8

4 Package information 9

5 Packing information 13

6 Revision history 15

1 Electrical ratings

Table 2. Absolute maximum ratings

Symbol	Parameter	Value	Unit
V_{DS}	Drain-source voltage	80	V
V_{GS}	Gate-source voltage	±20	V
I_D	Drain current (continuous) at T_C = 25 °C	80	A
I_D	Drain current (continuous) at T_C = 100 °C	72	A
I_{DM}(1)	Drain current (pulsed)	320	A
P_{TOT}	Total dissipation at T_C = 25 °C	167	W
E_{AS}(2)	Single pulse avalanche energy	180	mJ
T_J	Operating junction temperature	-55 to 175	°C
T_{stg}	Storage temperature		°C

1. Pulse width is limited by safe operating area
2. Starting T_J = 25 °C, I_D = 55 A, V_{DD} = 60 V

Table 3. Thermal data

Symbol	Parameter	Value	Unit
$R_{thj\text{-}case}$	Thermal resistance junction-case max.	0.9	°C/W
$R_{thj\text{-}pcb}$(1)	Thermal resistance junction-pcb max.	50	°C/W

1. When mounted on 1 inch² FR-4, 2 Oz copper board.

2 Electrical characteristics

(T_C = 25 °C unless otherwise specified)

Table 4. On/off-state

Symbol	Parameter	Test conditions	Min.	Typ.	Max.	Unit
$V_{(BR)DSS}$	Drain-source breakdown voltage	V_{GS} = 0, I_D = 1 mA	80			V
I_{DSS}	Zero-gate voltage drain current	V_{GS} = 0, V_{DS} = 80 V			1	µA
		V_{GS} = 0, V_{DS} = 80 V, T_C = 125 °C			100	µA
I_{GSS}	Gate-body leakage current	V_{DS} = 0, V_{GS} = +20 V			100	nA
$V_{GS(th)}$	Gate threshold voltage	V_{DS} = V_{GS}, I_D = 250 µA	2.5		4.5	V
$R_{DS(on)}$	Static drain-source on- resistance	V_{GS} = 10 V, I_D = 40 A		0.0056	0.0065	Ω

Table 5. Dynamic

Symbol	Parameter	Test conditions	Min.	Typ.	Max.	Unit
C_{iss}	Input capacitance	V_{DS} = 40 V, f = 1 MHz, V_{GS} = 0	-	9130	-	pF
C_{oss}	Output capacitance		-	320	-	pF
C_{rss}	Reverse transfer capacitance		-	225	-	pF
Q_g	Total gate charge	V_{DD} = 40 V, I_D = 80 A, V_{GS} = 10 V (see *Figure 14*)	-	150	-	nC
Q_{gs}	Gate-source charge		-	40	-	nC
Q_{gd}	Gate-drain charge		-	30	-	nC

Table 6. Switching times

Symbol	Parameter	Test conditions	Min.	Typ.	Max.	Unit
$t_{d(on)}$	Turn-on delay time	V_{DD} = 40 V, I_D = 55 A, R_G = 4.7 Ω, V_{GS} = 10 V (see *Figure 13*)	-	24	-	ns
t_r	Rise time		-	61	-	ns
$t_{d(off)}$	Turn-off delay time		-	162	-	ns
t_f	Fall time		-	48	-	ns

Table 7. Source-drain diode

Symbol	Parameter	Test conditions	Min.	Typ.	Max.	Unit
V_{SD} (1)	Forward on voltage	I_{SD} = 80 A, V_{GS} = 0	-		1.2	V
t_{rr}	Reverse recovery time	I_{SD} = 80 A, di/dt = 100 A/µs V_{DD} = 64 V (see *Figure 15*)	-	30		ns
Q_{rr}	Reverse recovery charge		-	34		nC
I_{RRM}	Reverse recovery current		-	2.3		A

1. Pulsed: pulse duration = 300 µs, duty cycle 1.5%

2.1 Electrical characteristics (curves)

Figure 2. Safe operating area

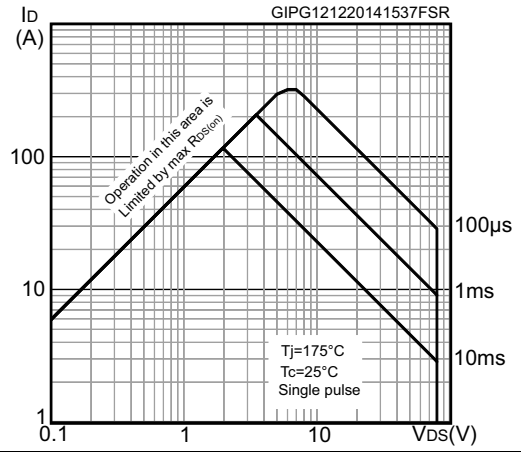

Figure 3. Thermal impedance

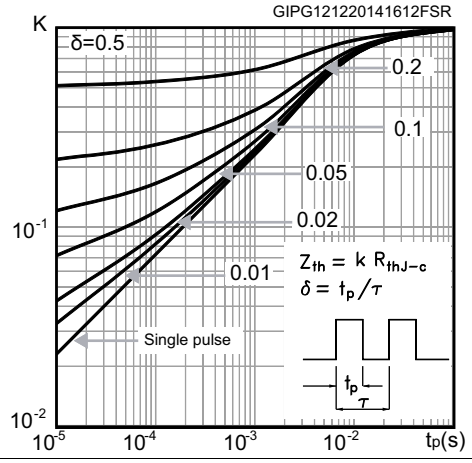

Figure 4. Output characteristics

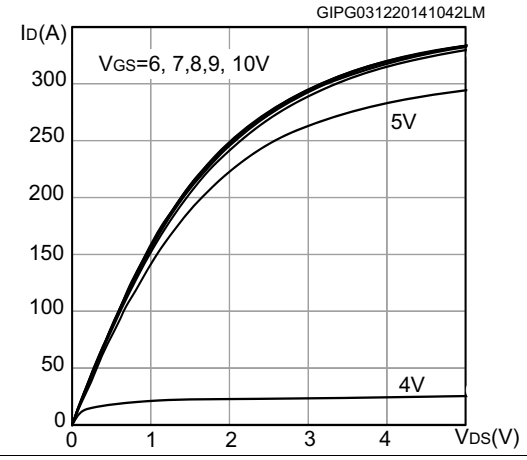

Figure 5. Transfer characteristics

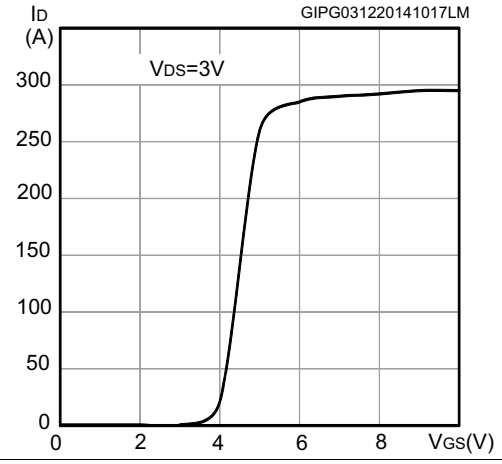

Figure 6. Gate charge vs gate-source

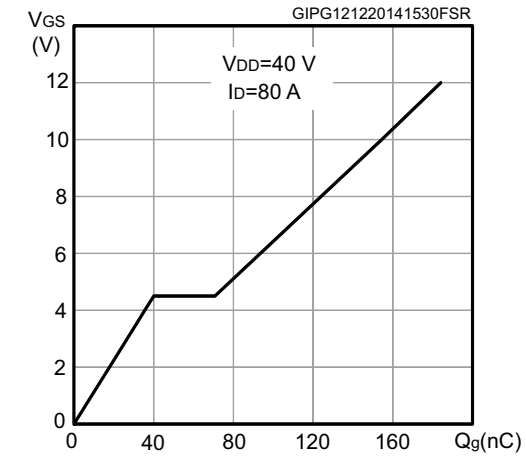

Figure 7. Static drain-source on-resistance

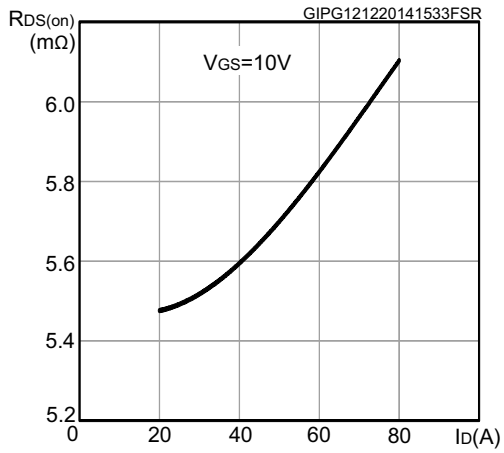

Figure 8. Capacitance variations

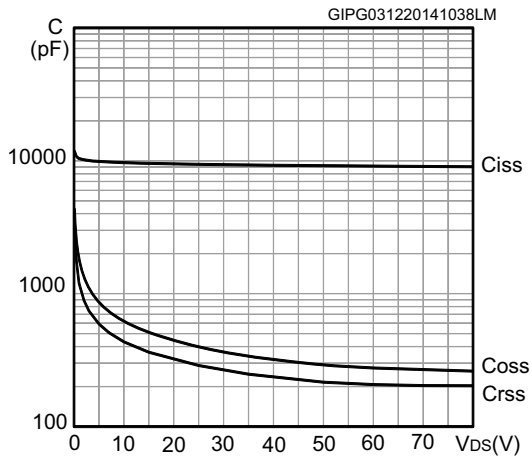

Figure 9. Normalized gate threshold voltage vs temperature

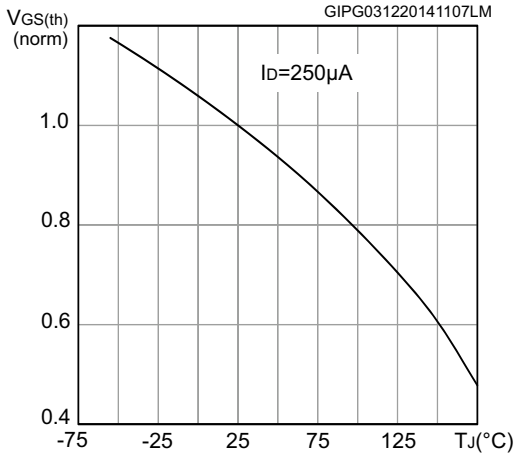

Figure 10. Normalized on-resistance

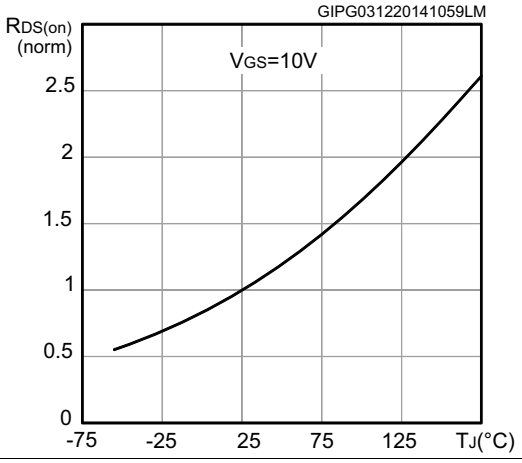

Figure 11. Normalized $V_{(BR)DSS}$ vs temperature

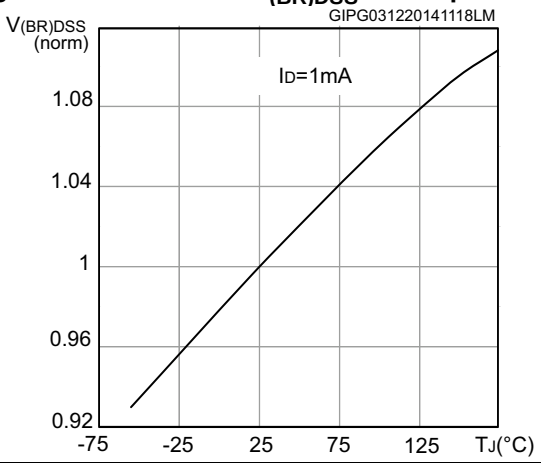

Figure 12. Drain-source diode forward characteristics

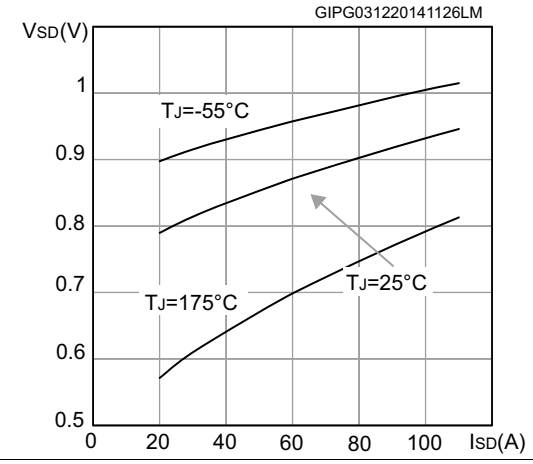

3 Test circuits

Figure 13. Switching times test circuit for resistive load

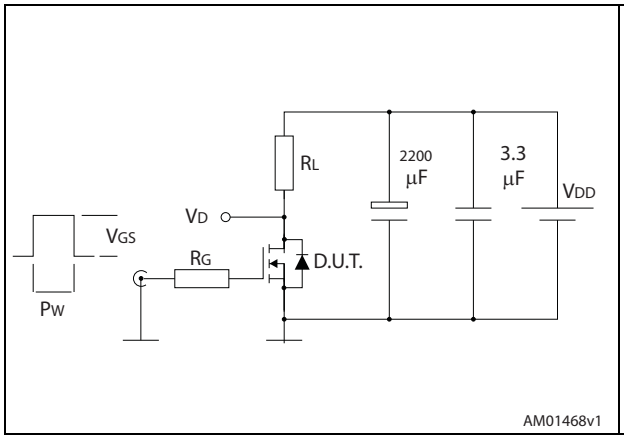

Figure 14. Gate charge test circuit

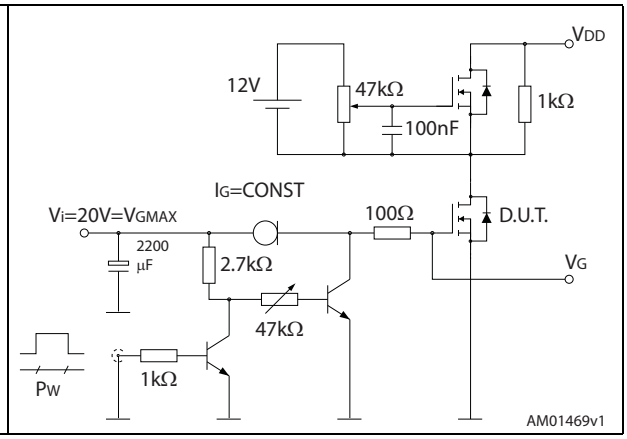

Figure 15. Test circuit for inductive load switching and diode recovery times

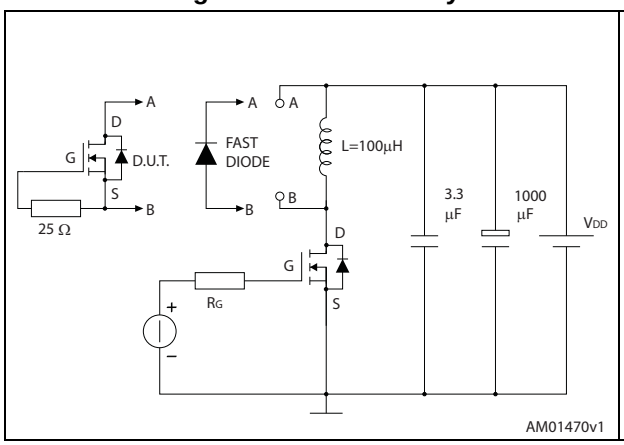

Figure 16. Unclamped inductive load test circuit

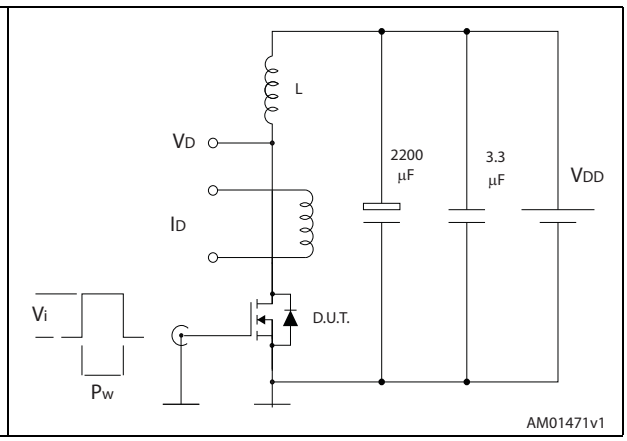

Figure 17. Unclamped inductive waveform

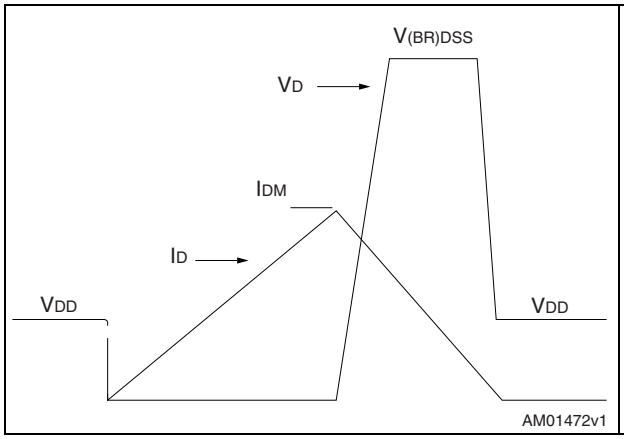

Figure 18. Switching time waveform

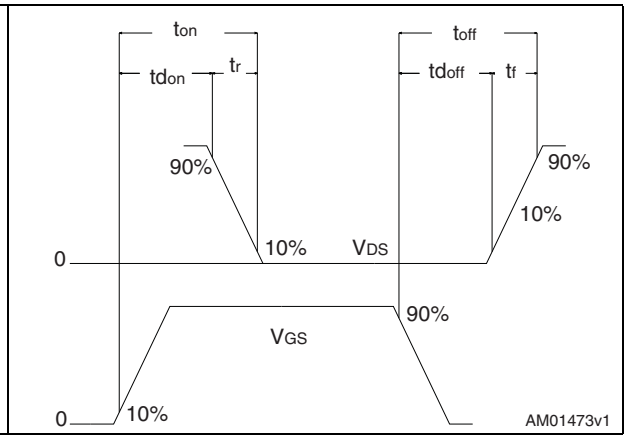

4 Package information

In order to meet environmental requirements, ST offers these devices in different grades of ECOPACK® packages, depending on their level of environmental compliance. ECOPACK® specifications, grade definitions and product status are available at: *www.st.com*. ECOPACK® is an ST trademark.

Figure 19. DPAK (TO-252) type A drawing

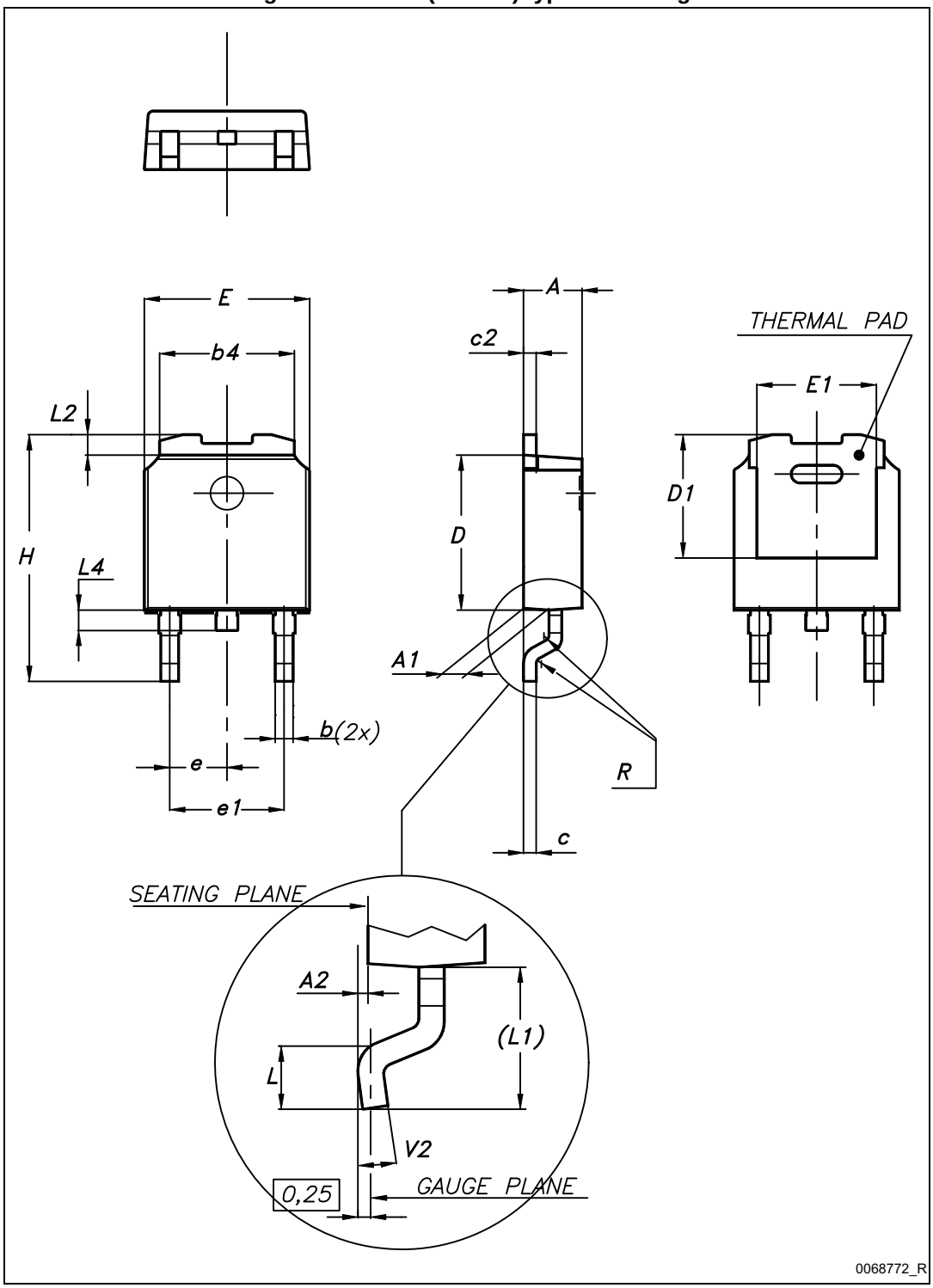

Table 8. DPAK (TO-252) type A mechanical data

Dim.	mm		
	Min.	Typ.	Max.
A	2.20		2.40
A1	0.90		1.10
A2	0.03		0.23
b	0.64		0.90
b4	5.20		5.40
c	0.45		0.60
c2	0.48		0.60
D	6.00		6.20
D1		5.10	
E	6.40		6.60
E1		4.70	
e		2.28	
e1	4.40		4.60
H	9.35		10.10
L	1.00		1.50
L1		2.80	
L2		0.80	
L4	0.60		1.00
R		0.20	
V2	0°		8°

Figure 20. DPAK (TO-252) footprint [(a)]

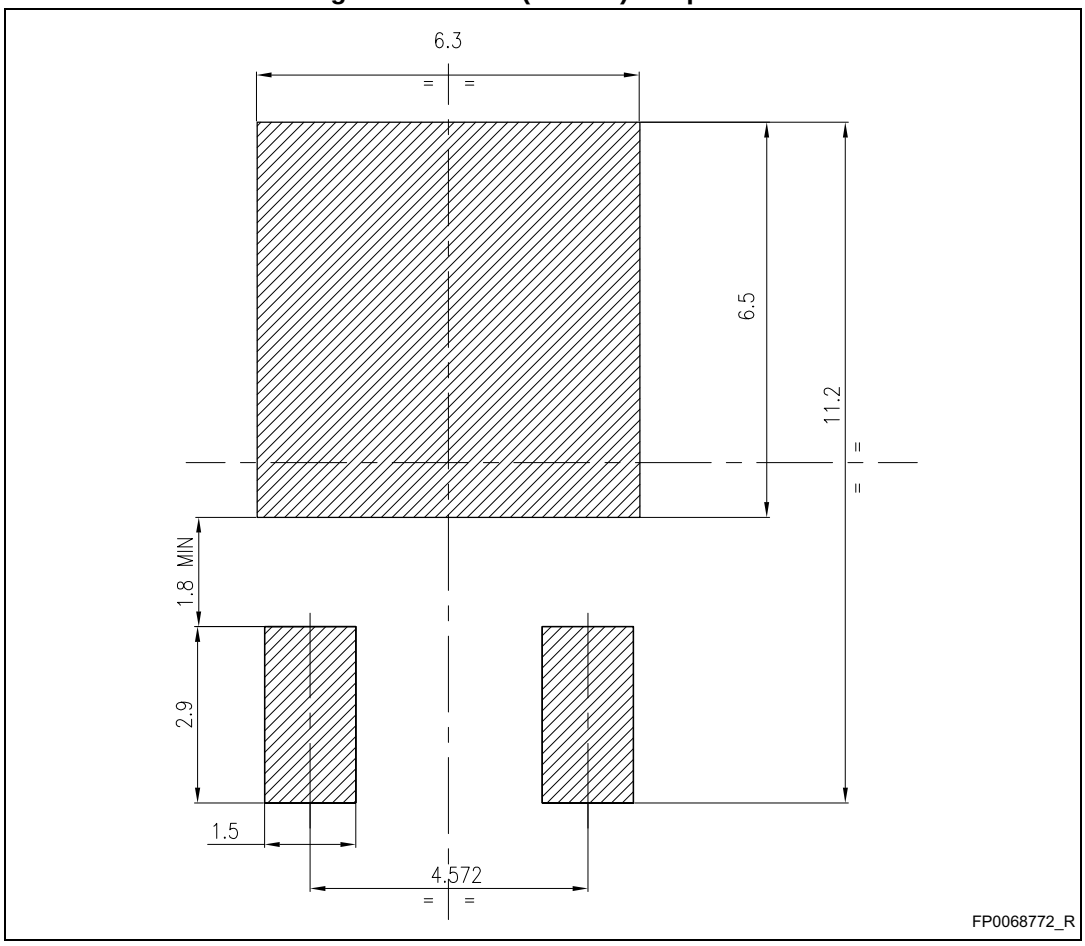

a. All dimensions are in millimeters

5 Packing information

Figure 21. Tape for DPAK (TO-252)

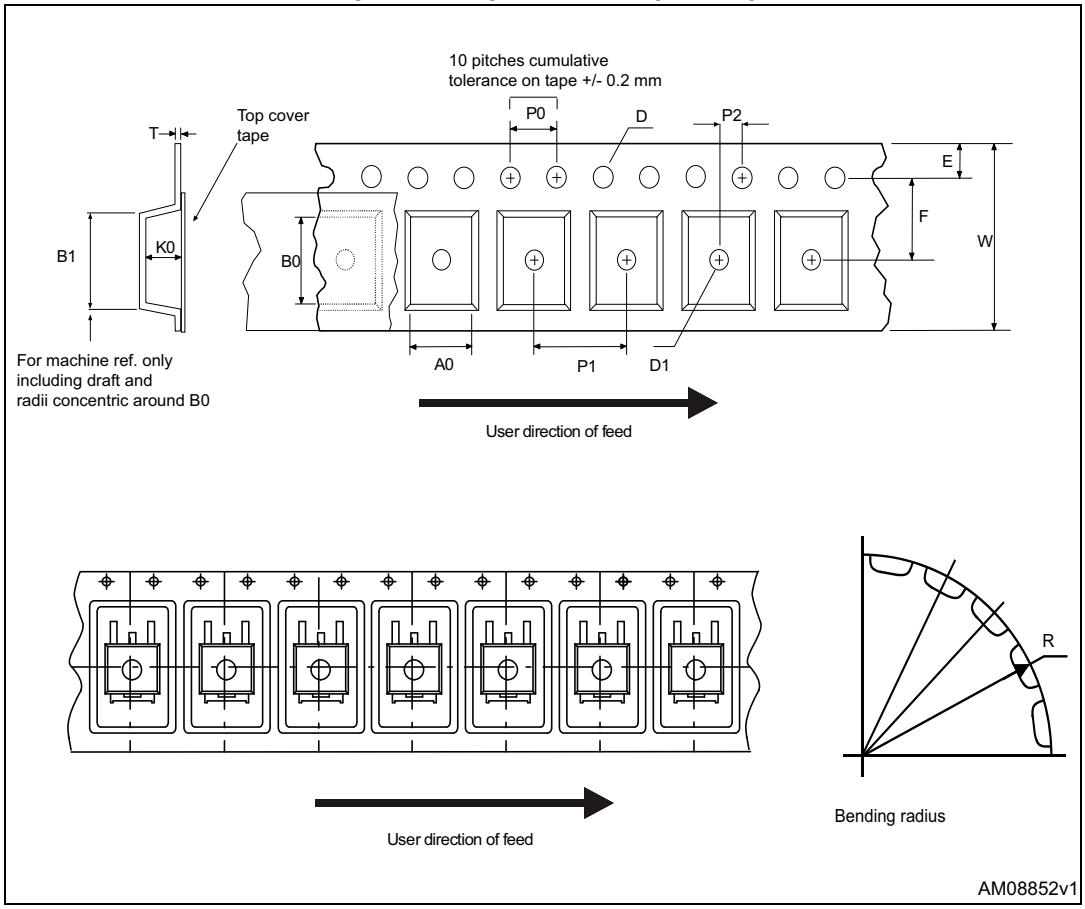

Figure 22. Reel for DPAK (TO-252)

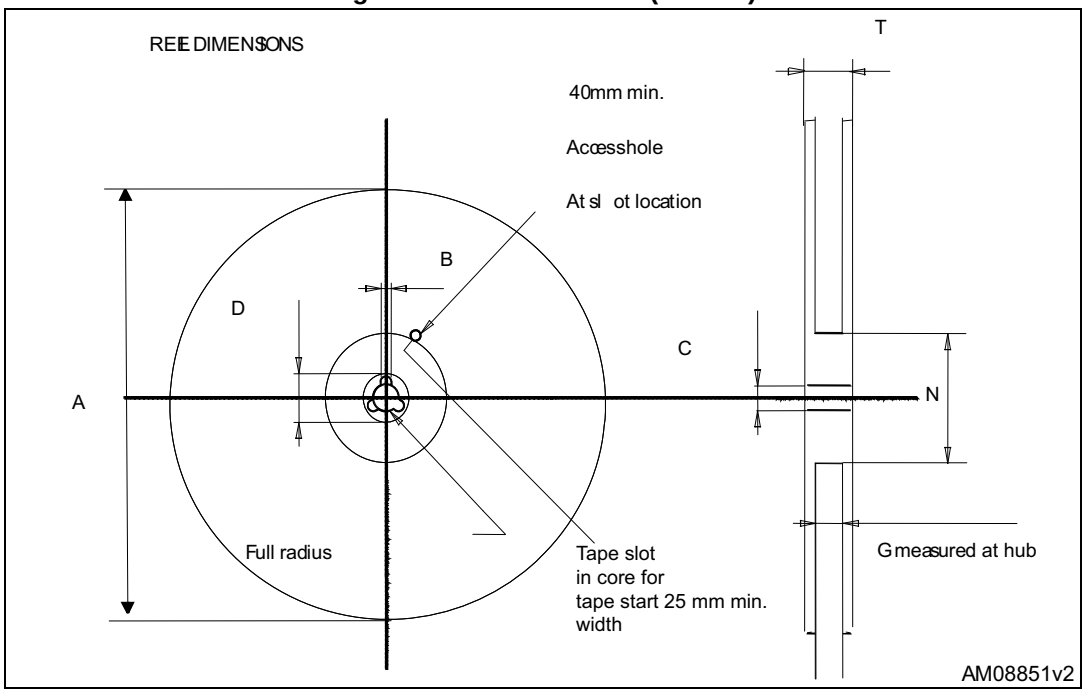

Table 9. DPAK (TO-252) tape and reel mechanical data

Tape			Reel		
Dim.	mm		Dim.	mm	
	Min.	Max.		Min.	Max.
A0	6.8	7	A		330
B0	10.4	10.6	B	1.5	
B1		12.1	C	12.8	13.2
D	1.5	1.6	D	20.2	
D1	1.5		G	16.4	18.4
E	1.65	1.85	N	50	
F	7.4	7.6	T		22.4
K0	2.55	2.75			
P0	3.9	4.1	Base qty.		2500
P1	7.9	8.1	Bulk qty.		2500
P2	1.9	2.1			
R	40				
T	0.25	0.35			
W	15.7	16.3			

6 Revision history

Table 10. Document revision history

Date	Revision	Changes
15-Dec-2014	1	First release.

IMPORTANT NOTICE – PLEASE READ CAREFULLY

STMicroelectronics NV and its subsidiaries (“ST”) reserve the right to make changes, corrections, enhancements, modifications, and improvements to ST products and/or to this document at any time without notice. Purchasers should obtain the latest relevant information on ST products before placing orders. ST products are sold pursuant to ST’s terms and conditions of sale in place at the time of order acknowledgement.

Purchasers are solely responsible for the choice, selection, and use of ST products and ST assumes no liability for application assistance or the design of Purchasers’ products.

No license, express or implied, to any intellectual property right is granted by ST herein.

Resale of ST products with provisions different from the information set forth herein shall void any warranty granted by ST for such product.

ST and the ST logo are trademarks of ST. All other product or service names are the property of their respective owners.

Information in this document supersedes and replaces information previously supplied in any prior versions of this document.

© 2014 STMicroelectronics – All rights reserved