STM32L021D4 STM32L021F4 STM32L021G4 STM32L021K4

Access line ultra-low-power 32-bit MCU Arm®-based Cortex®-M0+, 16KB Flash, 2KB SRAM, 512B EEPROM, ADC, AES

Datasheet - production data

Features

- Ultra-low-power platform
  - 1.65 V to 3.6 V power supply
  - -40 to 125 °C temperature range
  - 0.23 µA Standby mode (2 wakeup pins)
  - 0.29 µA Stop mode (16 wakeup lines)
  - 0.54 µA Stop mode + RTC + 2 KB RAM retention
  - Down to 76 µA/MHz in Run mode
  - 5 µs wakeup time (from Flash memory)
  - 41 µA 12-bit ADC conversion at 10 ksps
- Core: Arm® 32-bit Cortex®-M0+
  - From 32 kHz to 32 MHz max.
  - 0.95 DMIPS/MHz
- Reset and supply management
  - Ultra-safe, low-power BOR (brownout reset) with 5 selectable thresholds
  - Ultralow power POR/PDR
  - Programmable voltage detector (PVD)
- Clock sources
  - 0 to 32 MHz external clock
  - 32 kHz oscillator for RTC with calibration
  - High speed internal 16 MHz factory-trimmed RC (+/- 1%)
  - Internal low-power 37 kHz RC
  - Internal multispeed low-power 65 kHz to 4.2 MHz RC
  - PLL for CPU clock
- Pre-programmed bootloader
  - USART, SPI supported
- Development support
  - Serial wire debug supported
- Up to 28 fast I/Os (23 I/Os 5V tolerant)
- Memories
  - 16 KB Flash memory with ECC
  - 2 KB RAM
  - 512 B of data EEPROM with ECC
  - 20-byte backup register
  - Sector protection against R/W operation



TSSOP14/20 169 mils | UFQFPN20 3x3 mm UFQFPN28 4x4 mm UFQFPN32 5x5 mm | LQFP32 7x7 mm

- Rich Analog peripherals
  - 12-bit ADC 1.14 Msps up to 10 channels (down to 1.65 V)
  - 2x ultra-low-power comparators (window mode and wake up capability, down to 1.65 V)
- 5-channel DMA controller, supporting ADC, SPI, I2C, USART, Timers, AES
- 4x peripherals communication interface
- 1x USART (ISO 7816, IrDA), 1x UART (low power)
- 1x SPI 16 Mbits/s
- 1x I2C (SMBus/PMBus)
- 7x timers: 1x 16-bit with up to 4 channels, 1x 16-bit with up to 2 channels, 1x 16-bit ultra-low-power timer, 1x SysTick, 1x RTC and 2x watchdogs (independent/window)
- CRC calculation unit, 96-bit unique ID
- Hardware Encryption Engine AES 128-bit
- All packages are ECOPACK®2

This is information on a product in full production. www.st.com

Contents

1 **Introduction 9**

2 **Description 10**

2.1 Device overview 11

2.2 Ultra-low-power device continuum 13

3 **Functional overview 14**

3.1 Low-power modes 14

3.2 Interconnect matrix 18

3.3 Arm® Cortex®-M0+ core 19

3.4 Reset and supply management 20

3.4.1 Power supply schemes 20

3.4.2 Power supply supervisor 20

3.4.3 Voltage regulator 21

3.4.4 Boot modes 21

3.5 Clock management 22

3.6 Low-power real-time clock and backup registers 24

3.7 General-purpose inputs/outputs (GPIOs) 24

3.8 Memories 25

3.9 Direct memory access (DMA) 25

3.10 Analog-to-digital converter (ADC) 26

3.11 Temperature sensor 26

3.11.1 Internal voltage reference (V_{REFINT}) 26

3.12 Ultra-low-power comparators and reference voltage 27

3.13 System configuration controller 27

3.14 AES 27

3.15 Timers and watchdogs 28

3.15.1 General-purpose timers (TIM2, TIM21) 28

3.15.2 Low-power Timer (LPTIM) 29

3.15.3 SysTick timer 29

3.15.4 Independent watchdog (IWDG) 29

3.15.5 Window watchdog (WWDG) 29

3.16 Communication interfaces 30
3.16.1 I2C bus 30
3.16.2 Universal synchronous/asynchronous receiver transmitter (USART) . . 31
3.16.3 Low-power universal asynchronous receiver transmitter (LPUART) . . . 31
3.16.4 Serial peripheral interface (SPI) 32
3.17 Cyclic redundancy check (CRC) calculation unit 32
3.18 Serial wire debug port (SW-DP) 32

4 Pin descriptions 33

5 Memory mapping 43

6 Electrical characteristics 44
6.1 Parameter conditions 44
6.1.1 Minimum and maximum values 44
6.1.2 Typical values 44
6.1.3 Typical curves 44
6.1.4 Loading capacitor 44
6.1.5 Pin input voltage 44
6.1.6 Power supply scheme 45
6.1.7 Current consumption measurement 45
6.2 Absolute maximum ratings 46
6.3 Operating conditions 48
6.3.1 General operating conditions 48
6.3.2 Embedded reset and power control block characteristics 49
6.3.3 Embedded internal reference voltage 51
6.3.4 Supply current characteristics 52
6.3.5 Wakeup time from low-power mode 62
6.3.6 External clock source characteristics 64
6.3.7 Internal clock source characteristics 67
6.3.8 PLL characteristics 69
6.3.9 Memory characteristics 70
6.3.10 EMC characteristics 72
6.3.11 Electrical sensitivity characteristics 73
6.3.12 I/O current injection characteristics 74
6.3.13 I/O port characteristics 75
6.3.14 NRST pin characteristics 79

6.3.15 12-bit ADC characteristics 80
6.3.16 Temperature sensor characteristics 84
6.3.17 Comparators 85
6.3.18 Timer characteristics 86
6.3.19 Communications interfaces 87

7 Package information 94
7.1 LQFP32 package information 94
7.2 UFQFPN32 package information 97
7.3 UFQFPN28 4 x 4 mm package information 99
7.4 UFQFPN20 package information 102
7.5 TSSOP20 package information 105
7.6 TSSOP14 package information 107
7.7 Thermal characteristics 108
7.7.1 Reference document 109

8 Ordering information 110

9 Revision history 111

List of tables

Table 1. Ultra-low-power STM32L021x4 device features and peripheral counts . . . 11
Table 2. Functionalities depending on the operating power supply range . . . 16
Table 3. CPU frequency range depending on dynamic voltage scaling . . . 16
Table 4. Functionalities depending on the working mode (from Run/active down to standby) . . . 17
Table 5. STM32L021x4 peripherals interconnect matrix . . . 19
Table 6. Timer feature comparison . . . 28
Table 7. Comparison of I2C analog and digital filters . . . 30
Table 8. STM32L021x4 I^2C implementation . . . 30
Table 9. USART implementation . . . 31
Table 10. SPI implementation . . . 32
Table 11. Legend/abbreviations used in the pinout table . . . 35
Table 12. Pin definitions . . . 36
Table 13. Alternate functions . . . 41
Table 14. Voltage characteristics . . . 46
Table 15. Current characteristics . . . 47
Table 16. Thermal characteristics . . . 47
Table 17. General operating conditions . . . 48
Table 18. Embedded reset and power control block characteristics . . . 49
Table 19. Embedded internal reference voltage calibration values . . . 51
Table 20. Embedded internal reference voltage . . . 51
Table 21. Current consumption in Run mode, code with data processing running from Flash . . . 53
Table 22. Current consumption in Run mode vs code type, code with data processing running from Flash . . . 53
Table 23. Current consumption in Run mode, code with data processing running from RAM . . . 55
Table 24. Current consumption in Run mode vs code type, code with data processing running from RAM . . . 55
Table 25. Current consumption in Sleep mode . . . 56
Table 26. Current consumption in Low-power Run mode . . . 57
Table 27. Current consumption in Low-power Sleep mode . . . 58
Table 28. Typical and maximum current consumptions in Stop mode . . . 59
Table 29. Typical and maximum current consumptions in Standby mode . . . 60
Table 30. Average current consumption during wakeup . . . 60
Table 31. Peripheral current consumption in run or Sleep mode . . . 61
Table 32. Peripheral current consumption in Stop and Standby mode . . . 62
Table 33. Low-power mode wakeup timings . . . 62
Table 34. High-speed external user clock characteristics . . . 64
Table 35. Low-speed external user clock characteristics . . . 65
Table 36. LSE oscillator characteristics . . . 66
Table 37. 16 MHz HSI16 oscillator characteristics . . . 67
Table 38. LSI oscillator characteristics . . . 68
Table 39. MSI oscillator characteristics . . . 68
Table 40. PLL characteristics . . . 69
Table 41. RAM and hardware registers . . . 70
Table 42. Flash memory and data EEPROM characteristics . . . 71
Table 43. Flash memory and data EEPROM endurance and retention . . . 71
Table 44. EMS characteristics . . . 72
Table 45. EMI characteristics . . . 73

Table 46. ESD absolute maximum ratings . . . 73
Table 47. Electrical sensitivities . . . 74
Table 48. I/O current injection susceptibility . . . 74
Table 49. I/O static characteristics . . . 75
Table 50. Output voltage characteristics . . . 77
Table 51. I/O AC characteristics . . . 78
Table 52. NRST pin characteristics . . . 79
Table 53. ADC characteristics . . . 80
Table 54. R_{AIN} max for f_{ADC} = 16 MHz . . . 82
Table 55. ADC accuracy . . . 82
Table 56. Temperature sensor calibration values . . . 84
Table 57. Temperature sensor characteristics . . . 84
Table 58. Comparator 1 characteristics . . . 85
Table 59. Comparator 2 characteristics . . . 85
Table 60. TIMx characteristics . . . 86
Table 61. I2C analog filter characteristics . . . 87
Table 62. I2C frequency in all I2C modes . . . 88
Table 63. SPI characteristics in voltage Range 1 . . . 89
Table 64. SPI characteristics in voltage Range 2 . . . 90
Table 65. SPI characteristics in voltage Range 3 . . . 91
Table 66. LQFP32 - 32-pin, 7 x 7 mm, 32-pin low-profile quad flat package mechanical data . . . 95
Table 67. UFQFPN32 - 32-pin, 5x5 mm, 0.5 mm pitch ultra thin fine pitch quad flat package mechanical data . . . 98
Table 68. WLCSP25 - 25-ball, 2.133 x 2.070 mm, 0.4 mm pitch wafer level chip scale package mechanical data . . . 99
Table 69. UFQFPN28 - 28-lead, 4x4 mm, 0.5 mm pitch, ultra thin fine pitch quad flat package mechanical data . . . 100
Table 70. UFQFPN20 - 20-lead, 3x3 mm, 0.5 mm pitch, ultra thin fine pitch quad flat package mechanical data . . . 102
Table 71. TSSOP20 – 20-lead thin shrink small outline, 6.5 x 4.4 mm, 0.65 mm pitch, package mechanical data . . . 105
Table 72. TSSOP14 – 14-lead thin shrink small outline, 5 x 4.4 mm, 0.65 mm pitch, package mechanical data . . . 107
Table 73. Thermal characteristics . . . 109
Table 74. STM32L021x4 ordering information scheme . . . 110
Table 75. Document revision history . . . 111

List of figures

Figure 1. STM32L021x4 block diagram . . . 12
Figure 2. Clock tree . . . 23
Figure 3. STM32L021x4 LQFP32 pinout . . . 33
Figure 4. STM32L021x4 UFQFPN32 pinout . . . 33
Figure 5. STM32L021x4 UFQFPN28 pinout . . . 34
Figure 6. STM32L021x4 UFQFPN20 pinout . . . 34
Figure 7. STM32L021x4 TSSOP20 pinout . . . 35
Figure 8. STM32L021x4 TSSOP14 pinout . . . 35
Figure 9. Pin loading conditions . . . 44
Figure 10. Pin input voltage . . . 44
Figure 11. Power supply scheme . . . 45
Figure 12. Current consumption measurement scheme . . . 45
Figure 13. IDD vs VDD, at TA= 25 °C, Run mode, code running from Flash memory, Range 2, 16 MHz HSE, 1WS . . . 54
Figure 14. IDD vs VDD, at TA= 25 °C, Run mode, code running from Flash memory, Range 2, HSI16, 1WS . . . 54
Figure 15. IDD vs VDD, at TA= -40/25/55/ 85/105/125 °C, Low-power run mode, code running from RAM, Range 3, MSI (Range 0) at 64 KHz, 0 WS . . . 58
Figure 16. IDD vs VDD, at TA= -40/25/55/ 85/105/125 °C, Stop mode with RTC enabled and running on LSE Low drive . . . 59
Figure 17. IDD vs VDD, at TA= -40/25/55/85/105/125 °C, Stop mode with RTC disabled, all clocks OFF . . . 59
Figure 18. High-speed external clock source AC timing diagram . . . 64
Figure 19. Low-speed external clock source AC timing diagram . . . 65
Figure 20. Typical application with a 32.768 kHz crystal . . . 66
Figure 21. HSI16 minimum and maximum value versus temperature . . . 67
Figure 22. VIH/VIL versus VDD (CMOS I/Os) . . . 76
Figure 23. VIH/VIL versus VDD (TTL I/Os) . . . 76
Figure 24. I/O AC characteristics definition . . . 79
Figure 25. Recommended NRST pin protection . . . 80
Figure 26. ADC accuracy characteristics . . . 83
Figure 27. Typical connection diagram using the ADC . . . 84
Figure 28. SPI timing diagram - slave mode and CPHA = 0 . . . 92
Figure 29. SPI timing diagram - slave mode and CPHA = 1(1) . . . 92
Figure 30. SPI timing diagram - master mode(1) . . . 93
Figure 31. LQFP32 - 32-pin, 7 x 7 mm, 32-pin low-profile quad flat package outline . . . 94
Figure 32. LQFP32 recommended footprint . . . 95
Figure 33. Example of LQFP32 marking (package top view) . . . 96
Figure 34. UFQFPN32 - 32-pin, 5x5 mm, 0.5 mm pitch ultra thin fine pitch quad flat package outline . . . 97
Figure 35. UFQFPN32 recommended footprint . . . 98
Figure 36. UFQFPN28 - 28-lead, 4x4 mm, 0.5 mm pitch, ultra thin fine pitch quad flat package outline . . . 99
Figure 37. UFQFPN28 recommended footprint . . . 101
Figure 38. Example of UFQFPN28 marking (package top view) . . . 101
Figure 39. UFQFPN20 - 20-lead, 3x3 mm, 0.5 mm pitch, ultra thin fine pitch quad flat package outline . . . 102
Figure 40. UFQFPN20 - 20-lead, 3x3 mm, 0.5 mm pitch, ultra thin fine pitch quad flat

package recommended footprint 103
Figure 41. Example of UFQFPN20 marking (package top view) 104
Figure 42. TSSOP20 – 20-lead thin shrink small outline, 6.5 x 4.4 mm, 0.65 mm pitch, package outline 105
Figure 43. TSSOP20 – 20-lead thin shrink small outline, 6.5 x 4.4 mm, 0.65 mm pitch, package footprint 106
Figure 44. TSSOP14 – 14-lead thin shrink small outline, 5.0 x 4.4 mm, 0.65 mm pitch, package outline 107
Figure 45. Example of TSSOP14 marking (package top view) 108
Figure 46. Thermal resistance 109

1 Introduction

The ultra-low-power STM32L021x4 family includes devices in 6 different package types from 14 to 32 pins. The description below gives an overview of the complete range of peripherals proposed in this family.

These features make the ultra-low-power STM32L021x4 microcontrollers suitable for a wide range of applications:

- Gas/water meters and industrial sensors
- Healthcare and fitness equipment
- Remote control and user interface
- PC peripherals, gaming, GPS equipment
- Alarm system, wired and wireless sensors, video intercom

This STM32L021x4 datasheet should be read in conjunction with the STM32L0x1 reference manual (RM0377).

For information on the Arm® Cortex®-M0+ core please refer to the Cortex®-M0+ Technical Reference Manual, available from the www.arm.com website.

Figure 1 shows the general block diagram of the device family.

2 Description

The access line ultra-low-power STM32L021x4 family incorporates the high-performance Arm® Cortex®-M0+ 32-bit RISC core operating at a 32 MHz frequency, high-speed embedded memories (16 Kbytes of Flash program memory, 512 bytes of data EEPROM and 2 Kbytes of RAM) plus an extensive range of enhanced I/Os and peripherals.

The STM32L021x4 devices provide high power efficiency for a wide range of performance. It is achieved with a large choice of internal and external clock sources, an internal voltage adaptation and several low-power modes.

The STM32L021x4 devices offer several analog features, one 12-bit ADC with hardware oversampling, two ultra-low-power comparators, AES, several timers, one low-power timer (LPTIM), three general-purpose 16-bit timers, one RTC and one SysTick which can be used as timebases. They also feature two watchdogs, one watchdog with independent clock and window capability and one window watchdog based on bus clock.

Moreover, the STM32L021x4 devices embed standard and advanced communication interfaces: one I2C, one SPI, one USART, and a low-power UART (LPUART).

The STM32L021x4 also include a real-time clock and a set of backup registers that remain powered in Standby mode.

The ultra-low-power STM32L021x4 devices operate from a 1.8 to 3.6 V power supply (down to 1.65 V at power down) with BOR and from a 1.65 to 3.6 V power supply without BOR option. They are available in the -40 to +125 °C temperature range. A comprehensive set of power-saving modes allows the design of low-power applications.





2.1 Device overview

Table 1. Ultra-low-power STM32L021x4 device features and peripheral counts

Peripheral		STM32 L021D4	STM32 L021F4	STM32 L021G4	STM32L021K4
Flash (Kbytes)		16			
Data EEPROM (bytes)		512			
RAM (Kbytes)		2			
AES		1			
Timers	General-purpose	2			
	LPTIM	1			
RTC/SYSTICK/IWDG/ WWDG		1/1/1/1			
Communication interfaces	SPI	1			
	I^2C	1			
	USART	1			
	LPUART	1			
GPIOs		11	16	24	26/28(1)
Clocks: HSE(2)/LSE/HSI/MSI/LSI		1/1/1/1/1			
12-bit synchronized ADC Number of channels		1 4	1 7/9(3)	1 10	
Comparators		2			
Max. CPU frequency		32 MHz			
Operating voltage		1.8 V to 3.6 V (down to 1.65 V at power-down) with BOR option 1.65 V to 3.6 V without BOR option			
Operating temperatures		Ambient temperature: –40 to +125 °C Junction temperature: –40 to +130 °C			
Packages		TSSOP14	TSSOP20, UFQFPN20	UFQFPN28	LQFP32, UFQFPN32

1. The devices feature 26 and 28 GPIOs on LQFP32 and UFQFPN32, respectively.
2. HSE available only as external clock input (HSE bypass).
3. The devices feature 7 and 9 ADC channels on UFQFPN20 and TSSOP20, respectively.

Figure 1. STM32L021x4 block diagram

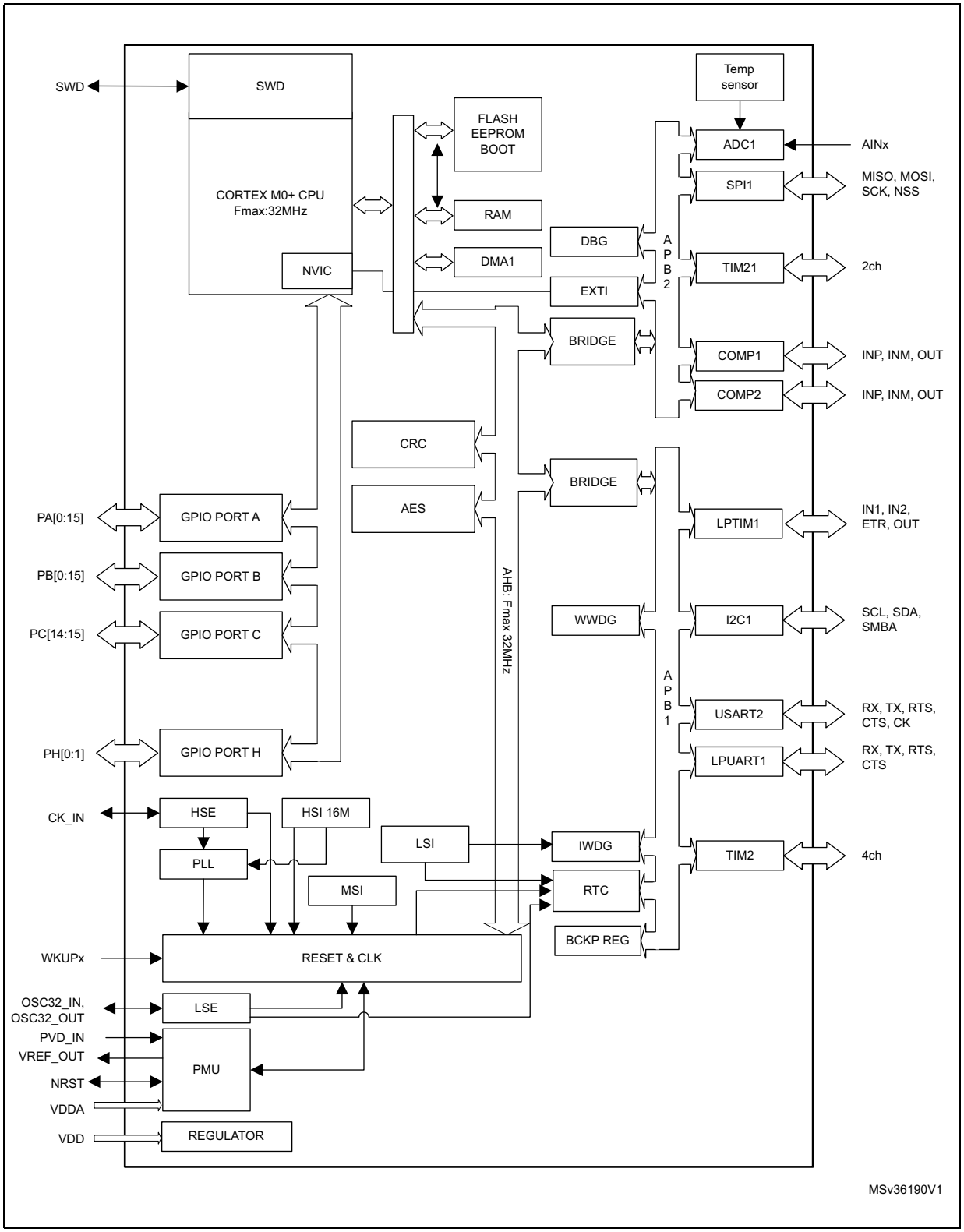

2.2 Ultra-low-power device continuum

The ultra-low-power family offers a large choice of core and features, from 8-bit proprietary core up to Arm® Cortex®-M4, including Arm® Cortex®-M3 and Arm® Cortex®-M0+. The STM32Lx series are the best choice to answer your needs in terms of ultra-low-power features. The STM32 Ultra-low-power series are the best solution for applications such as gas/water meter, keyboard/mouse or fitness and healthcare application. Several built-in features like LCD drivers, dual-bank memory, low-power Run mode, operational amplifiers, 128-bit AES, DAC, crystal-less USB and many other definitely help you building a highly cost optimized application by reducing BOM cost. STMicroelectronics, as a reliable and long-term manufacturer, ensures as much as possible pin-to-pin compatibility between all STM8Lx and STM32Lx on one hand, and between all STM32Lx and STM32Fx on the other hand. Thanks to this unprecedented scalability, your legacy application can be upgraded to respond to the latest market feature and efficiency requirements.

3 Functional overview

3.1 Low-power modes

The ultra-low-power STM32L021x4 supports dynamic voltage scaling to optimize its power consumption in Run mode. The voltage from the internal low-drop regulator that supplies the logic can be adjusted according to the system's maximum operating frequency and the external voltage supply.

There are three power consumption ranges:

- Range 1 (V_{DD} range limited to 1.71-3.6 V), with the CPU running at up to 32 MHz
- Range 2 (full V_{DD} range), with a maximum CPU frequency of 16 MHz
- Range 3 (full V_{DD} range), with a maximum CPU frequency limited to 4.2 MHz

Seven low-power modes are provided to achieve the best compromise between low-power consumption, short startup time and available wakeup sources:

- **Sleep mode**

  In Sleep mode, only the CPU is stopped. All peripherals continue to operate and can wake up the CPU when an interrupt/event occurs. Sleep mode power consumption at 16 MHz is about 1 mA with all peripherals off.

- **Low-power run mode**

  This mode is achieved with the multispeed internal (MSI) RC oscillator set to the low-speed clock (max 131 kHz), execution from SRAM or Flash memory, and internal regulator in low-power mode to minimize the regulator's operating current. In Low-power run mode, the clock frequency and the number of enabled peripherals are both limited.

- **Low-power sleep mode**

  This mode is achieved by entering Sleep mode with the internal voltage regulator in low-power mode to minimize the regulator's operating current. In Low-power sleep mode, both the clock frequency and the number of enabled peripherals are limited; a typical example would be to have a timer running at 32 kHz.

  When wakeup is triggered by an event or an interrupt, the system reverts to the Run mode with the regulator on.

- **Stop mode with RTC**

  The Stop mode achieves the lowest power consumption while retaining the RAM and register contents and real time clock. All clocks in the V_{CORE} domain are stopped, the PLL, MSI RC, HSE and HSI RC oscillators are disabled. The LSE or LSI is still running. The voltage regulator is in the low-power mode.

  Some peripherals featuring wakeup capability can enable the HSI RC during Stop mode to detect their wakeup condition.

  The device can be woken up from Stop mode by any of the EXTI line, in 3.5 µs, the processor can serve the interrupt or resume the code. The EXTI line source can be any GPIO. It can be the PVD output, the comparator 1 event or comparator 2 event

(if internal reference voltage is on), it can be the RTC alarm/tamper/timestamp/wakeup events, the USART/I2C/LPUART/LPTIM wakeup events.

- **Stop mode without RTC**

  The Stop mode achieves the lowest power consumption while retaining the RAM and register contents. All clocks are stopped, the PLL, MSI RC, HSI and LSI RC, HSE and LSE crystal oscillator are disabled.

  Some peripherals featuring wakeup capability can enable the HSI RC during Stop mode to detect their wakeup condition.

  The voltage regulator is in the low-power mode. The device can be woken up from Stop mode by any of the EXTI line, in 3.5 µs, the processor can serve the interrupt or resume the code. The EXTI line source can be any GPIO. It can be the PVD output, the comparator 1 event or comparator 2 event (if internal reference voltage is on). It can also be wakened by the USART/I2C/LPUART/LPTIM wakeup events.

- **Standby mode with RTC**

  The Standby mode is used to achieve the lowest power consumption and real time clock. The internal voltage regulator is switched off so that the entire V_{CORE} domain is powered off. The PLL, MSI RC, HSE bypass and HSI RC oscillators are also switched off. The LSE or LSI is still running. After entering Standby mode, the RAM and register contents are lost except for registers in the Standby circuitry (wakeup logic, IWDG, RTC, LSI, LSE Crystal 32 KHz oscillator, RCC_CSR register).

  The device exits Standby mode in 60 µs when an external reset (NRST pin), an IWDG reset, a rising edge on one of the three WKUP pins, RTC alarm (Alarm A or Alarm B), RTC tamper event, RTC timestamp event or RTC Wakeup event occurs.

- **Standby mode without RTC**

  The Standby mode is used to achieve the lowest power consumption. The internal voltage regulator is switched off so that the entire V_{CORE} domain is powered off. The PLL, MSI RC, HSI and LSI RC, HSE and LSE crystal oscillator are also switched off. After entering Standby mode, the RAM and register contents are lost except for registers in the Standby circuitry (wakeup logic, IWDG, RTC, LSI, LSE Crystal 32 KHz oscillator, RCC_CSR register).

  The device exits Standby mode in 60 µs when an external reset (NRST pin) or a rising edge on one of the three WKUP pin occurs.

Note: The RTC, the IWDG, and the corresponding clock sources are not stopped automatically by entering Stop or Standby mode.

Table 2. Functionalities depending on the operating power supply range

Operating power supply range	Functionalities depending on the operating power supply range	
	ADC operation	Dynamic voltage scaling range
V_{DD} = 1.65 to 1.71 V	ADC only, conversion time up to 570 ksps	Range 2 or range 3
V_{DD} = 1.71 to 1.8 V(1)	ADC only, conversion time up to 1.14 Msps	Range 1, range 2 or range 3
V_{DD} = 1.8 to 2.0 V(1)	Conversion time up to 1.14 Msps	Range1, range 2 or range 3
V_{DD} = 2.0 to 2.4 V	Conversion time up to 1.14 Msps	Range 1, range 2 or range 3
V_{DD} = 2.4 to 3.6 V	Conversion time up to 1.14 Msps	Range 1, range 2 or range 3

1. CPU frequency changes from initial to final must respect the condition: $f_{CPU\ initial} < 4 f_{CPU\ initial}$. It must also respect 5 µs delay between two changes. For example to switch from 4.2 MHz to 32 MHz, you can switch from 4.2 MHz to 16 MHz, wait 5 µs, then switch from 16 MHz to 32 MHz.

Table 3. CPU frequency range depending on dynamic voltage scaling

CPU frequency range	Dynamic voltage scaling range
16 MHz to 32 MHz (1ws) 32 kHz to 16 MHz (0ws)	Range 1
8 MHz to 16 MHz (1ws) 32 kHz to 8 MHz (0ws)	Range 2
32 kHz to 4.2 MHz (0ws)	Range 3

Table 4. Functionalities depending on the working mode (from Run/active down to standby) (1)(2)

IPs	Run/Active	Sleep	Low-power run	Low-power sleep	Stop		Standby	
						Wakeup capability		Wakeup capability
CPU	Y	-	Y	-	-	-	-	-
Flash memory	O	O	O	O	-	-	-	-
RAM	Y	Y	Y	Y	Y	-	-	-
Backup registers	Y	Y	Y	Y	Y	-	Y	-
EEPROM	O	O	O	O	-	-	-	-
Brown-out reset (BOR)	O	O	O	O	O	O	O	O
DMA	O	O	O	O	-	-	-	-
Programmable Voltage Detector (PVD)	O	O	O	O	O	O	-	-
Power-on/down reset (POR/PDR)	Y	Y	Y	Y	Y	Y	Y	Y
High Speed Internal (HSI)	O	O	-	-	(3)	-	-	-
High Speed External (HSE)	O	O	O	O	-	-	-	-
Low Speed Internal (LSI)	O	O	O	O	O	-	O	-
Low Speed External (LSE)	O	O	O	O	O	-	O	-
Multi-Speed Internal (MSI)	O	O	Y	Y	-	-	-	-
Inter-Connect Controller	Y	Y	Y	Y	Y	-	-	-
RTC	O	O	O	O	O	O	O	-
RTC Tamper	O	O	O	O	O	O	O	O
Auto WakeUp (AWU)	O	O	O	O	O	-	O	O
USART	O	O	O	O	O(4)	O	-	-
LPUART	O	O	O	O	O(4)	O	-	-
SPI	O	O	O	O	-		-	-
I2C	O	O	O	O	O(5)	O	-	-
ADC	O	O	-	-	-	-	-	-
Temperature sensor	O	O	O	O	O	-	-	-

Table 4. Functionalities depending on the working mode (from Run/active down to standby) (continued)[1][2]

IPs	Run/Active	Sleep	Low-power run	Low-power sleep	Stop		Standby	
						Wakeup capability		Wakeup capability
Comparators	O	O	O	O	O	O	-	-
16-bit timers	O	O	O	O	-	-	-	-
LPTIM	O	O	O	O	O	O	-	-
IWDG	O	O	O	O	O	O	O	O
WWDG	O	O	O	O	-	-	-	-
SysTick Timer	O	O	O	O	-	-	-	-
GPIOs	O	O	O	O	O	O	-	2 pins
Wakeup time to Run mode	0 µs	6 CPU cycles	3 µs	7 CPU cycles	5 µs		65 µs	
Consumption V_{DD}=1.8 to 3.6 V (Typ)	Down to 128 µA/MHz (from Flash)	Down to 31 µA/MHz (from Flash)	Down to 7 µA	Down to 3.8 µA	0.29 µA (No RTC) V_{DD}=1.8 V		0.18 µA (No RTC) V_{DD}=1.8 V	
					0.54 µA (with RTC) V_{DD}=1.8 V		0.41 µA (with RTC) V_{DD}=1.8 V	
					0.34 µA (No RTC) V_{DD}=3.0 V		0.23 µA (No RTC) V_{DD}=3.0 V	
					0.67 µA (with RTC) V_{DD}=3.0 V		0.53 µA (with RTC) V_{DD}=3.0 V	

1. Legend:
   "Y" = Yes (enable).
   "O" = Optional, can be enabled/disabled by software)
   "-" = Not available
2. The consumption values given in this table are preliminary data given for indication. They are subject to slight changes.
3. Some peripherals with wakeup from Stop capability can request HSI to be enabled. In this case, HSI is woken up by the peripheral, and only feeds the peripheral which requested it. HSI is automatically put off when the peripheral does not need it anymore.
4. UART and LPUART reception is functional in Stop mode. It generates a wakeup interrupt on Start.To generate a wakeup on address match or received frame event, the LPUART can run on LSE clock while the UART has to wake up or keep running the HSI clock.
5. I2C address detection is functional in Stop mode. It generates a wakeup interrupt in case of address match. It will wake up the HSI during reception.

3.2 Interconnect matrix

Several peripherals are directly interconnected. This allows autonomous communication between peripherals, thus saving CPU resources and power consumption. In addition, these hardware connections allow fast and predictable latency.

Depending on peripherals, these interconnections can operate in Run, Sleep, Low-power run, Low-power sleep and Stop modes.

Table 5. STM32L021x4 peripherals interconnect matrix

Interconnect source	Interconnect destination	Interconnect action	Run	Sleep	Low-power run	Low-power sleep	Stop
COMPx	TIM2,TIM21	Timer input channel, trigger from analog signals comparison	Y	Y	Y	Y	-
	LPTIM1	Timer input channel, trigger from analog signals comparison	Y	Y	Y	Y	Y
TIMx	TIMx	Timer triggered by other timer	Y	Y	Y	Y	-
RTC	TIM21	Timer triggered by Auto wake-up	Y	Y	Y	Y	-
	LPTIM1	Timer triggered by RTC event	Y	Y	Y	Y	Y
All clock source	TIMx	Clock source used as input channel for RC measurement and trimming	Y	Y	Y	Y	-
GPIO	TIMx	Timer input channel and trigger	Y	Y	Y	Y	-
	LPTIM1	Timer input channel and trigger	Y	Y	Y	Y	Y
	ADC	Conversion trigger	Y	Y	Y	Y	-

3.3 Arm® Cortex®-M0+ core

The Cortex-M0+ processor is an entry-level 32-bit Arm Cortex processor designed for a broad range of embedded applications. It offers significant benefits to developers, including:

- a simple architecture that is easy to learn and program
- ultra-low power, energy-efficient operation
- excellent code density
- deterministic, high-performance interrupt handling
- upward compatibility with Cortex-M processor family
- platform security robustness.

The Cortex-M0+ processor is built on a highly area and power optimized 32-bit processor core, with a 2-stage pipeline von Neumann architecture. The processor delivers exceptional energy efficiency through a small but powerful instruction set and extensively optimized design, providing high-end processing hardware including a single-cycle multiplier.

The Cortex-M0+ processor provides the exceptional performance expected of a modern 32-bit architecture, with a higher code density than other 8-bit and 16-bit microcontrollers.

Owing to its embedded Arm core, the STM32L021x4 are compatible with all Arm tools and software.

Nested vectored interrupt controller (NVIC)

The ultra-low-power STM32L021x4 embed a nested vectored interrupt controller able to handle up to 32 maskable interrupt channels and 4 priority levels.

The Cortex-M0+ processor closely integrates a configurable Nested Vectored Interrupt Controller (NVIC), to deliver industry-leading interrupt performance. The NVIC:

- includes a Non-Maskable Interrupt (NMI)
- provides zero jitter interrupt option
- provides four interrupt priority levels

The tight integration of the processor core and NVIC provides fast execution of Interrupt Service Routines (ISRs), dramatically reducing the interrupt latency. This is achieved through the hardware stacking of registers, and the ability to abandon and restart load-multiple and store-multiple operations. Interrupt handlers do not require any assembler wrapper code, removing any code overhead from the ISRs. Tail-chaining optimization also significantly reduces the overhead when switching from one ISR to another.

To optimize low-power designs, the NVIC integrates with the sleep modes, that include a deep sleep function that enables the entire device to enter rapidly stop or standby mode.

This hardware block provides flexible interrupt management features with minimal interrupt latency.

3.4 Reset and supply management

3.4.1 Power supply schemes

- V_{DD} = 1.65 to 3.6 V: external power supply for I/Os and the internal regulator. Provided externally through V_{DD} pins.
- V_{SSA}, V_{DDA} = 1.65 to 3.6 V: external analog power supplies for ADC, reset blocks, RCs and PLL. V_{DDA} and V_{SSA} must be connected to V_{DD} and V_{SS}, respectively. On TSSOP14 package, V_{DDA} is internally connected to V_{DD}.

3.4.2 Power supply supervisor

The devices feature an integrated ZEROPOWER power-on reset (POR)/power-down reset (PDR) that can be coupled with a brownout reset (BOR) circuitry.

Two versions are available:

- The version with BOR activated at power-on operates between 1.8 V and 3.6 V.
- The other version without BOR operates between 1.65 V and 3.6 V.

After the V_{DD} threshold is reached (1.65 V or 1.8 V depending on the BOR which is active or not at power-on), the option byte loading process starts, either to confirm or modify default thresholds, or to disable the BOR permanently: in this case, the VDD min value becomes 1.65 V (whatever the version, BOR active or not, at power-on).

When BOR is active at power-on, it ensures proper operation starting from 1.8 V whatever the power ramp-up phase before it reaches 1.8 V. When BOR is not active at power-up, the power ramp-up should guarantee that 1.65 V is reached on V_{DD} at least 1 ms after it exits the POR area.

Five BOR thresholds are available through option bytes, starting from 1.8 V to 3 V. To reduce the power consumption in Stop mode, it is possible to automatically switch off the internal reference voltage (V_{REFINT}) in Stop mode. The device remains in reset mode when V_{DD} is below a specified threshold, $V_{POR/PDR}$ or V_{BOR}, without the need for any external reset circuit.

Note: The start-up time at power-on is typically 3.3 ms when BOR is active at power-up, the start-up time at power-on can be decreased down to 1 ms typically for devices with BOR inactive at power-up.

The devices feature an embedded programmable voltage detector (PVD) that monitors the $V_{DD/VDDA}$ power supply and compares it to the V_{PVD} threshold. This PVD offers 7 different levels between 1.85 V and 3.05 V, chosen by software, with a step around 200 mV. An interrupt can be generated when $V_{DD/VDDA}$ drops below the V_{PVD} threshold and/or when $V_{DD/VDDA}$ is higher than the V_{PVD} threshold. The interrupt service routine can then generate a warning message and/or put the MCU into a safe state. The PVD is enabled by software.

3.4.3 Voltage regulator

The regulator has three operation modes: main (MR), low power (LPR) and power down.

- MR is used in Run mode (nominal regulation)
- LPR is used in the Low-power run, Low-power sleep and Stop modes
- Power down is used in Standby mode. The regulator output is high impedance, the kernel circuitry is powered down, inducing zero consumption but the contents of the registers and RAM are lost except for the standby circuitry (wakeup logic, IWDG, RTC, LSI, LSE crystal 32 KHz oscillator, RCC_CSR).

3.4.4 Boot modes

At startup, BOOT0 pin and nBOOT0, nBOOT1 and nBOOT_SEL option bits are used to select one of three boot options:

- Boot from Flash memory
- Boot from System memory
- Boot from embedded RAM

The bootloader is located in System memory. It is used to reprogram the Flash memory by using SPI1 (PA4, PA7, PA13 and PA14 on TSSOP14 package or PA4, PA5, PA6 and PA7 on other packages) or USART2 (PA2, PA3 and PA9, PA10).

If the bootloader is activated (the bootloader is active on all empty devices due to the empty check mechanism), then the above mentioned bits are configured depending on whether SPI1 or USART2 functionality is used.

See STM32™ microcontroller system memory boot mode AN2606 for details.

3.5 Clock management

The clock controller distributes the clocks coming from different oscillators to the core and the peripherals. It also manages clock gating for low-power modes and ensures clock robustness. It features:

- **Clock prescaler**

  To get the best trade-off between speed and current consumption, the clock frequency to the CPU and peripherals can be adjusted by a programmable prescaler.

- **Safe clock switching**

  Clock sources can be changed safely on the fly in Run mode through a configuration register.

- **Clock management**

  To reduce power consumption, the clock controller can stop the clock to the core, individual peripherals or memory.

- **System clock source**

  Three different clock sources can be used to drive the master clock SYSCLK:

  – 0-32 MHz high-speed external (HSE bypass), that can supply a PLL
  – 16 MHz high-speed internal RC oscillator (HSI), trimmable by software, that can supply a PLL
  – Multispeed internal RC oscillator (MSI), trimmable by software, able to generate 7 frequencies (65 kHz, 131 kHz, 262 kHz, 524 kHz, 1.05 MHz, 2.1 MHz, 4.2 MHz). When a 32.768 kHz clock source is available in the system (LSE), the MSI frequency can be trimmed by software down to a ±0.5% accuracy.

- **Auxiliary clock source**

  Two ultra-low-power clock sources that can be used to drive the real-time clock:

  – 32.768 kHz low-speed external crystal (LSE)
  – 37 kHz low-speed internal RC (LSI), also used to drive the independent watchdog. The LSI clock can be measured using the high-speed internal RC oscillator for greater precision.

- **RTC clock sources**

  The LSI, LSE or HSE sources can be chosen to clock the RTC, whatever the system clock.

- **Startup clock**

  After reset, the microcontroller restarts by default with an internal 2 MHz clock (MSI). The prescaler ratio and clock source can be changed by the application program as soon as the code execution starts.

- **Clock security system (CSS)**

  This feature can be enabled by software. If an LSE clock failure occurs, it provides an interrupt or wakeup event which is generated assuming it has been previously enabled. This feature is not available on the HSE clock.

- **Clock-out capability (MCO: microcontroller clock output)**

  It outputs one of the internal clocks for external use by the application.

Several prescalers allow the configuration of the AHB frequency, each APB (APB1 and APB2) domains. The maximum frequency of the AHB and the APB domains is 32 MHz. See *Figure 2* for details on the clock tree.

Figure 2. Clock tree

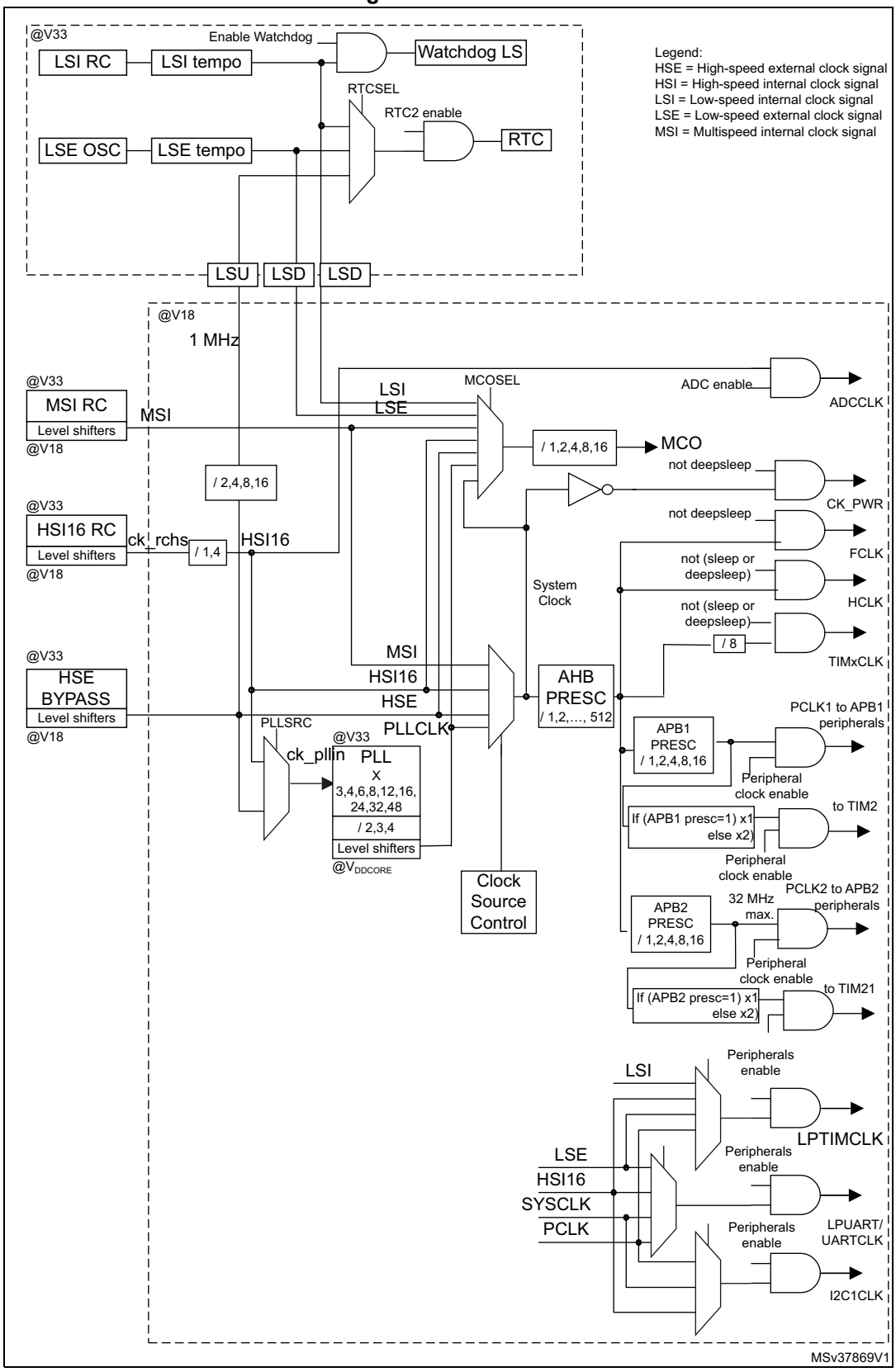

3.6 Low-power real-time clock and backup registers

The real time clock (RTC) and the 5 backup registers are supplied in all modes including standby mode. The backup registers are five 32-bit registers used to store 20 bytes of user application data. They are not reset by a system reset, or when the device wakes up from Standby mode.

The RTC is an independent BCD timer/counter. Its main features are the following:

- Calendar with subsecond, seconds, minutes, hours (12 or 24 format), week day, date, month, year, in BCD (binary-coded decimal) format
- Automatically correction for 28, 29 (leap year), 30, and 31 day of the month
- Two programmable alarms with wake up from Stop and Standby mode capability
- Periodic wakeup from Stop and Standby with programmable resolution and period
- On-the-fly correction from 1 to 32767 RTC clock pulses. This can be used to synchronize it with a master clock.
- Reference clock detection: a more precise second source clock (50 or 60 Hz) can be used to enhance the calendar precision.
- Digital calibration circuit with 1 ppm resolution, to compensate for quartz crystal inaccuracy
- 2 anti-tamper detection pins with programmable filter. The MCU can be woken up from Stop and Standby modes on tamper event detection.
- Timestamp feature which can be used to save the calendar content. This function can be triggered by an event on the timestamp pin, or by a tamper event. The MCU can be woken up from Stop and Standby modes on timestamp event detection.

The RTC clock sources can be:

- A 32.768 kHz external crystal
- A resonator or oscillator
- The internal low-power RC oscillator (typical frequency of 37 kHz)
- The high-speed external clock

3.7 General-purpose inputs/outputs (GPIOs)

Each of the GPIO pins can be configured by software as output (push-pull or open-drain), as input (with or without pull-up or pull-down) or as peripheral alternate function. Most of the GPIO pins are shared with digital or analog alternate functions, and can be individually remapped using dedicated alternate function registers. All GPIOs are high current capable. Each GPIO output, speed can be slowed (40 MHz, 10 MHz, 2 MHz, 400 kHz). The alternate function configuration of I/Os can be locked if needed following a specific sequence in order to avoid spurious writing to the I/O registers. The I/O controller is connected to a dedicated IO bus with a toggling speed of up to 32 MHz.

The BOOT0 pin is shared with PB9 GPIO pin. This pin is an input-only pin. If nBOOT_SEL option bit is reset, sampling this pin on NRST rising edge gives the internal BOOT0 state. This pin then works as PB9 pin. The input voltage characteristics of this pin are specific for BOOT0 pin type (see *Table 49: I/O static characteristics*).

Extended interrupt/event controller (EXTI)

The extended interrupt/event controller consists of 26 edge detector lines used to generate interrupt/event requests. Each line can be individually configured to select the trigger event

(rising edge, falling edge, both) and can be masked independently. A pending register maintains the status of the interrupt requests. The EXTI can detect an external line with a pulse width shorter than the Internal APB2 clock period. Up to 38 GPIOs can be connected to the 16 configurable interrupt/event lines. The 10 other lines are connected to PVD, RTC, USART, I2C, LPUART, LPTIM or comparator events.

3.8 Memories

The STM32L021x4 devices have the following features:

- 2 Kbytes of embedded SRAM accessed (read/write) at CPU clock speed with 0 wait states. With the enhanced bus matrix, operating the RAM does not lead to any performance penalty during accesses to the system bus (AHB and APB buses).
- The non-volatile memory is divided into three arrays:
  - 16 Kbytes of embedded Flash program memory
  - 512 bytes of data EEPROM
  - Information block containing 32 user and factory options bytes plus 4 Kbytes of system memory

The user options bytes are used to write-protect or read-out protect the memory (with 4 Kbyte granularity) and/or readout-protect the whole memory with the following options:

- **Level 0**: no protection
- **Level 1**: memory readout protected.

  The Flash memory cannot be read from or written to if either debug features are connected or boot in RAM is selected
- **Level 2**: chip readout protected, debug features (Cortex-M0+ serial wire) and boot in RAM selection disabled (debugline fuse)

The whole non-volatile memory embeds the error correction code (ECC) feature.

3.9 Direct memory access (DMA)

The flexible 5-channel, general-purpose DMA is able to manage memory-to-memory, peripheral-to-memory and memory-to-peripheral transfers. The DMA controller supports circular buffer management, avoiding the generation of interrupts when the controller reaches the end of the buffer.

Each channel is connected to dedicated hardware DMA requests, with software trigger support for each channel. Configuration is done by software and transfer sizes between source and destination are independent.

The DMA can be used with the main peripherals: AES, SPI, I^2C, USART, LPUART, general-purpose timers, and ADC.

3.10 Analog-to-digital converter (ADC)

A native 12-bit, extended to 16-bit through hardware oversampling, analog-to-digital converter is embedded into STM32L021x4 devices. It has up to 10 external channels and 2 internal channels (temperature sensor, voltage reference). Three channels, PA0, PA4 and PA5, are fast channels, while the others are standard channels.

The ADC performs conversions in single-shot or scan mode. In scan mode, automatic conversion is performed on a selected group of analog inputs.

The ADC frequency is independent from the CPU frequency, allowing maximum sampling rate of 1.14 MSPS even with a low CPU speed. The ADC consumption is low at all frequencies (~25 µA at 10 kSPS, ~200 µA at 1MSPS). An auto-shutdown function guarantees that the ADC is powered off except during the active conversion phase.

The ADC can be served by the DMA controller. It can operate from a supply voltage down to 1.65 V.

The ADC features a hardware oversampler up to 256 samples, this improves the resolution to 16 bits (see AN2668).

An analog watchdog feature allows very precise monitoring of the converted voltage of one, some or all scanned channels. An interrupt is generated when the converted voltage is outside the programmed thresholds.

The events generated by the general-purpose timers (TIMx) can be internally connected to the ADC start triggers, to allow the application to synchronize A/D conversions and timers.

3.11 Temperature sensor

The temperature sensor (T_{SENSE}) generates a voltage V_{SENSE} that varies linearly with temperature.

The temperature sensor is internally connected to the ADC_IN18 input channel which is used to convert the sensor output voltage into a digital value.

The sensor provides good linearity but it has to be calibrated to obtain good overall accuracy of the temperature measurement. As the offset of the temperature sensor varies from chip to chip due to process variation, the uncalibrated internal temperature sensor is suitable for applications that detect temperature changes only.

To improve the accuracy of the temperature sensor measurement, each device is individually factory-calibrated by ST. The temperature sensor factory calibration data are stored by ST in the system memory area, accessible in read-only mode (see *Table 56: Temperature sensor calibration values*).

3.11.1 Internal voltage reference (V_{REFINT})

The internal voltage reference (V_{REFINT}) provides a stable (bandgap) voltage output for the ADC and Comparators. V_{REFINT} is internally connected to the ADC_IN17 input channel. It enables accurate monitoring of the V_{DD} value (since no external voltage, V_{REF+}, is available for ADC). The precise voltage of V_{REFINT} is individually measured for each part by ST during production test and stored in the system memory area (see *Table 19: Embedded internal reference voltage calibration values*). It is accessible in read-only mode.

3.12 Ultra-low-power comparators and reference voltage

The STM32L021x4 embed two comparators sharing the same current bias and reference voltage. The reference voltage can be internal or external (coming from an I/O).

- One comparator with ultra low consumption
- One comparator with rail-to-rail inputs, fast or slow mode.
- The threshold can be one of the following:
  - External I/O pins
  - Internal reference voltage (V_{REFINT})
  - submultiple of Internal reference voltage(1/4, 1/2, 3/4) for the rail to rail comparator.

Both comparators can wake up the devices from Stop mode, and be combined into a window comparator.

The internal reference voltage is available externally via a low-power / low-current output buffer (driving current capability of 1 µA typical).

3.13 System configuration controller

The system configuration controller provides the capability to remap some alternate functions on different I/O ports.

The highly flexible routing interface allows the application firmware to control the routing of different I/Os to the TIM2, TIM21 and LPTIM1 timer input captures. It also controls the routing of internal analog signals to the ADC, COMP1 and COMP2 and the internal reference voltage V_{REFINT}.

3.14 AES

The AES Hardware Accelerator can be used to encrypt and decrypt data using the AES algorithm (compatible with FIPS PUB 197, 2001 Nov 26):

- Key scheduler
- Key derivation for decryption
- 128-bit data block processed
- 128-bit key length
- 213 clock cycles to encrypt/decrypt one 128-bit block
- Electronic codebook (ECB), cypher block chaining (CBC), and counter mode (CTR) supported by hardware.

The AES can be served by the DMA controller.

3.15 Timers and watchdogs

The ultra-low-power STM32L021x4 devices include two general-purpose timers, one low-power timer (LPTIM1), two watchdog timers and the SysTick timer.

Table 6 compares the features of the general-purpose and basic timers.

Table 6. Timer feature comparison

Timer	Counter resolution	Counter type	Prescaler factor	DMA request generation	Capture/compare channels	Complementary outputs
TIM2	16-bit	Up, down, up/down	Any integer between 1 and 65536	Yes	4	No
TIM21	16-bit	Up, down, up/down	Any integer between 1 and 65536	No	2	No

3.15.1 General-purpose timers (TIM2, TIM21)

There are three synchronizable general-purpose timers embedded in the STM32L021x4 devices (see *Table 6* for differences).

TIM2

TIM2 is based on 16-bit auto-reload up/down counter. It includes a 16-bit prescaler. It features four independent channels each for input capture/output compare, PWM or one-pulse mode output.

The TIM2 general-purpose timers can work together or with the TIM21 general-purpose timer via the Timer Link feature for synchronization or event chaining. Its counter can be frozen in debug mode. Any of the general-purpose timers can be used to generate PWM outputs.

TIM2 has independent DMA request generation.

This timer is capable of handling quadrature (incremental) encoder signals and the digital outputs from 1 to 3 hall-effect sensors.

TIM21

TIM21 is based on a 16-bit auto-reload up/down counter. It includes a 16-bit prescaler. It has two independent channels for input capture/output compare, PWM or one-pulse mode output. It can work together and be synchronized with TIM2 full-featured general-purpose timer.

It can also be used as simple timebase and be clocked by the LSE clock source (32.768 kHz) to provide independent timebase from the main CPU clock.

3.15.2 Low-power Timer (LPTIM)

The low-power timer has an independent clock and is running also in Stop mode if it is clocked by LSE, LSI or an external clock. It is able to wakeup the devices from Stop mode.

This low-power timer supports the following features:

- 16-bit up counter with 16-bit autoreload register
- 16-bit compare register
- Configurable output: pulse, PWM
- Continuous / one shot mode
- Selectable software / hardware input trigger
- Selectable clock source
  - Internal clock source: LSE, LSI, HSI or APB clock
  - External clock source over LPTIM1 input (working even with no internal clock source running, used by the Pulse Counter Application)
- Programmable digital glitch filter
- Encoder mode

3.15.3 SysTick timer

This timer is dedicated to the OS, but could also be used as a standard downcounter. It is based on a 24-bit downcounter with autoreload capability and a programmable clock source. It features a maskable system interrupt generation when the counter reaches ‘0’.

3.15.4 Independent watchdog (IWDG)

The independent watchdog is based on a 12-bit downcounter and 8-bit prescaler. It is clocked from an independent 37 kHz internal RC and, as it operates independently of the main clock, it can operate in Stop and Standby modes. It can be used either as a watchdog to reset the device when a problem occurs, or as a free-running timer for application timeout management. It is hardware- or software-configurable through the option bytes. The counter can be frozen in debug mode.

3.15.5 Window watchdog (WWDG)

The window watchdog is based on a 7-bit downcounter that can be set as free-running. It can be used as a watchdog to reset the device when a problem occurs. It is clocked from the main clock. It has an early warning interrupt capability and the counter can be frozen in debug mode.

3.16 Communication interfaces

3.16.1 I²C bus

One I²C interface (I2C1) can operate in multimaster or slave modes. The I²C interface can support Standard mode (Sm, up to 100 kbit/s), Fast mode (Fm, up to 400 kbit/s) and Fast Mode Plus (Fm+, up to 1 Mbit/s) with 20 mA output drive on some I/Os.

The I²C interface supports 7-bit and 10-bit addressing modes, multiple 7-bit slave addresses (2 addresses, 1 with configurable mask). They also include programmable analog and digital noise filters.

Table 7. Comparison of I2C analog and digital filters

	Analog filter	Digital filter
Pulse width of suppressed spikes	≥ 50 ns	Programmable length from 1 to 15 I2C peripheral clocks
Benefits	Available in Stop mode	1. Extra filtering capability vs. standard requirements. 2. Stable length
Drawbacks	Variations depending on temperature, voltage, process	Wakeup from Stop on address match is not available when digital filter is enabled.

In addition, I2C1 provides hardware support for SMBus 2.0 and PMBus 1.1: ARP capability, Host notify protocol, hardware CRC (PEC) generation/verification, timeouts verifications and ALERT protocol management. I2C1 also has a clock domain independent from the CPU clock, allowing the I2C1 to wake up the MCU from Stop mode on address match.

The I2C interface can be served by the DMA controller.

Refer to *Table 8* for the supported modes and features of I2C interface.

Table 8. STM32L021x4 I²C implementation

I2C features(1)	I2C1
7-bit addressing mode	X
10-bit addressing mode	X
Standard mode (up to 100 kbit/s)	X
Fast mode (up to 400 kbit/s)	X
Fast Mode Plus with 20 mA output drive I/Os (up to 1 Mbit/s)	X(2)
Independent clock	X
SMBus	X
Wakeup from STOP	X

1. X = supported.
2. See *Table 12: Pin definitions on page 36* for the list of I/Os that feature Fast Mode Plus capability

3.16.2 Universal synchronous/asynchronous receiver transmitter (USART)

The USART interface (USART2) is able to communicate at speeds of up to 4 Mbit/s.

It provides hardware management of the CTS, RTS and RS485 driver enable (DE) signals, multiprocessor communication mode and single-wire half-duplex communication mode. USART2 also supports Smartcard communication (ISO 7816, T=0 protocol) and IrDA SIR ENDEC.

USART2 interface can be served by the DMA controller.

Table 9 for the supported modes and features of USART interface.

Table 9. USART implementation

USART modes/features(1)	USART2
Hardware flow control for modem	X
Continuous communication using DMA	X
Multiprocessor communication	X
Synchronous mode	-
Smartcard mode	X
Single-wire half-duplex communication	X
IrDA SIR ENDEC block	X
LIN mode	-
Dual clock domain and wakeup from Stop mode	-
Receiver timeout interrupt	-
Modbus communication	-
Auto baud rate detection (4 modes)	-
Driver Enable	X

1. X = supported.

3.16.3 Low-power universal asynchronous receiver transmitter (LPUART)

The devices embed one Low-power UART. The LPUART supports asynchronous serial communication with minimum power consumption. It supports half duplex single wire communication and modem operations (CTS/RTS). It allows multiprocessor communication.

The LPUART has a clock domain independent from the CPU clock, and can wake up the system from Stop mode, using baudrates up to 46 Kbaud. The Wakeup events from Stop mode are programmable and can be:

- Start bit detection
- Or any received data frame
- Or a specific programmed data frame

Only a 32.768 kHz clock (LSE) is needed to allow LPUART communication up to 9600 baud. Therefore, even in Stop mode, the LPUART can wait for an incoming frame while having an extremely low energy consumption. Higher speed clock can be used to reach higher baudrates.

LPUART interface can be served by the DMA controller.

3.16.4 Serial peripheral interface (SPI)

The SPI is able to communicate at up to 16 Mbits/s in slave and master modes in full-duplex and half-duplex communication modes. The 3-bit prescaler gives 8 master mode frequencies and the frame is configurable to 8 bits or 16 bits. The hardware CRC generation/verification supports basic SD Card/MMC modes.

The SPI can be served by the DMA controller.

Refer to *Table 10* for the supported modes and features of SPI interface.

Table 10. SPI implementation

SPI features(1)	SPI1
Hardware CRC calculation	X
I2S mode	-
TI mode	X

1. X = supported.

3.17 Cyclic redundancy check (CRC) calculation unit

The CRC (cyclic redundancy check) calculation unit is used to get a CRC code using a configurable generator polynomial value and size.

Among other applications, CRC-based techniques are used to verify data transmission or storage integrity. In the scope of the EN/IEC 60335-1 standard, they offer a means of verifying the Flash memory integrity. The CRC calculation unit helps compute a signature of the software during runtime, to be compared with a reference signature generated at linktime and stored at a given memory location.

3.18 Serial wire debug port (SW-DP)

An Arm SW-DP interface is provided to allow a serial wire debugging tool to be connected to the MCU.

4 Pin descriptions

Figure 3. STM32L021x4 LQFP32 pinout

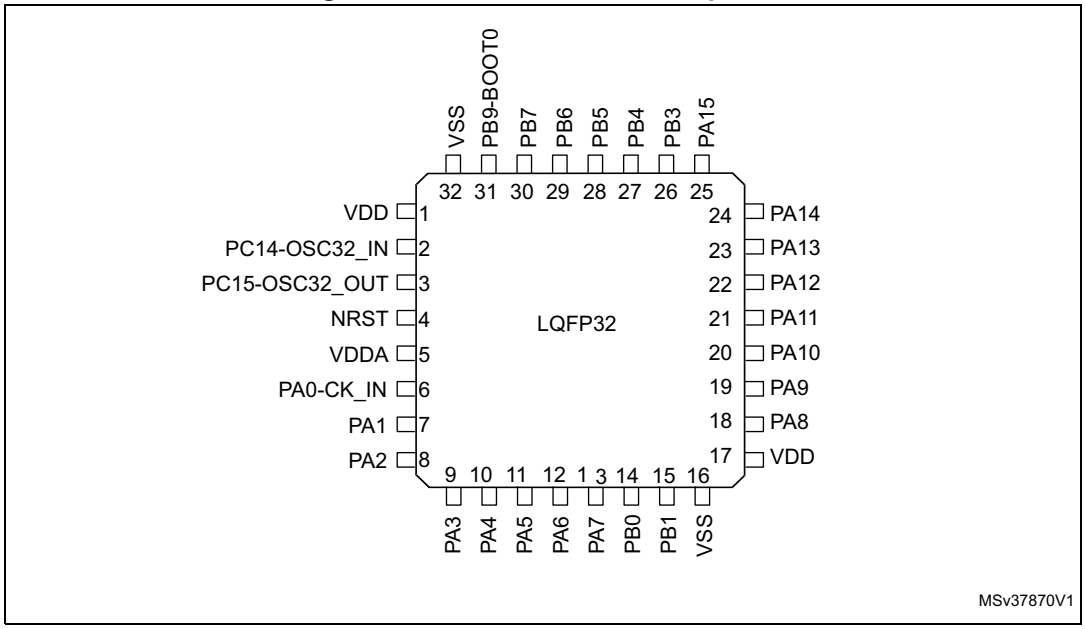

1. The above figure shows the package top view.

Figure 4. STM32L021x4 UFQFPN32 pinout

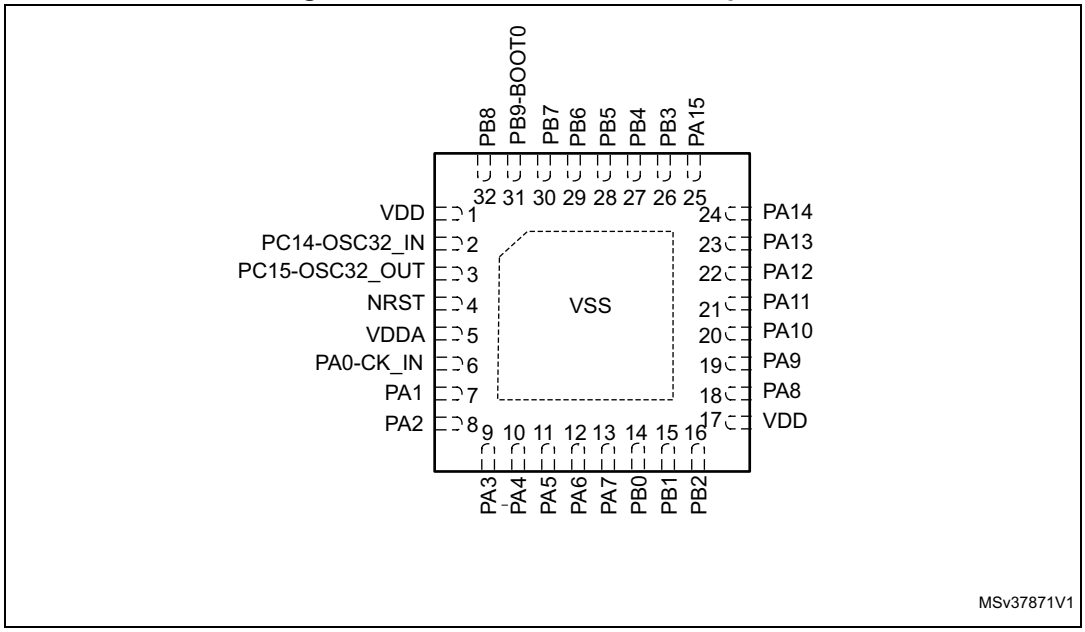

1. The above figure shows the package top view.

Figure 5. STM32L021x4 UFQFPN28 pinout

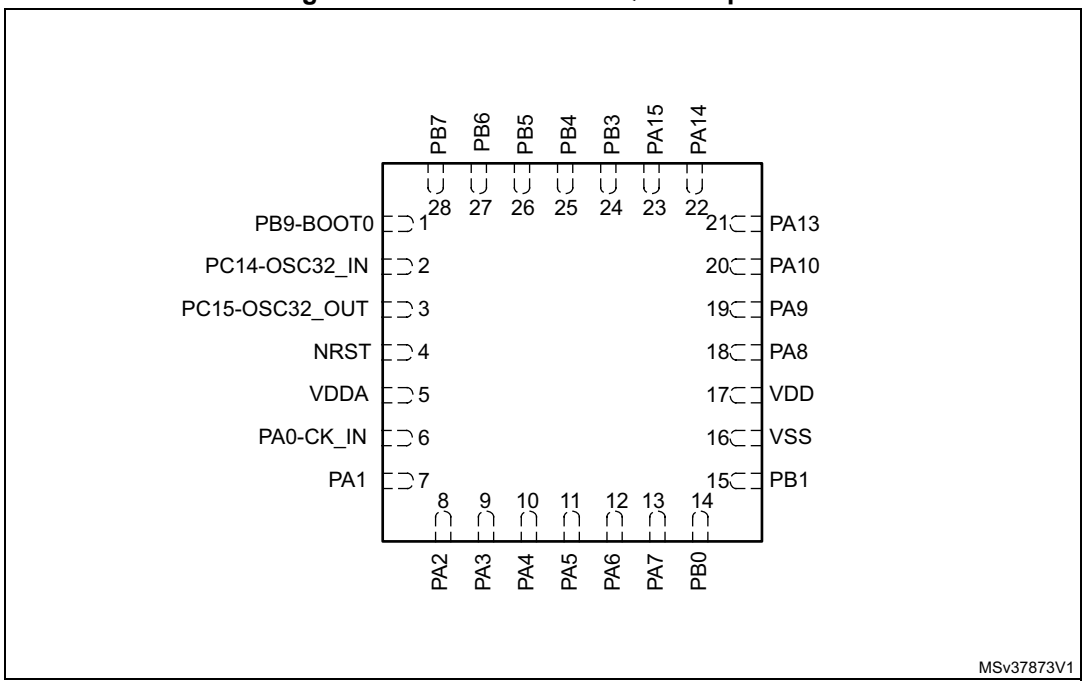

1. The above figure shows the package top view.

Figure 6. STM32L021x4 UFQFPN20 pinout

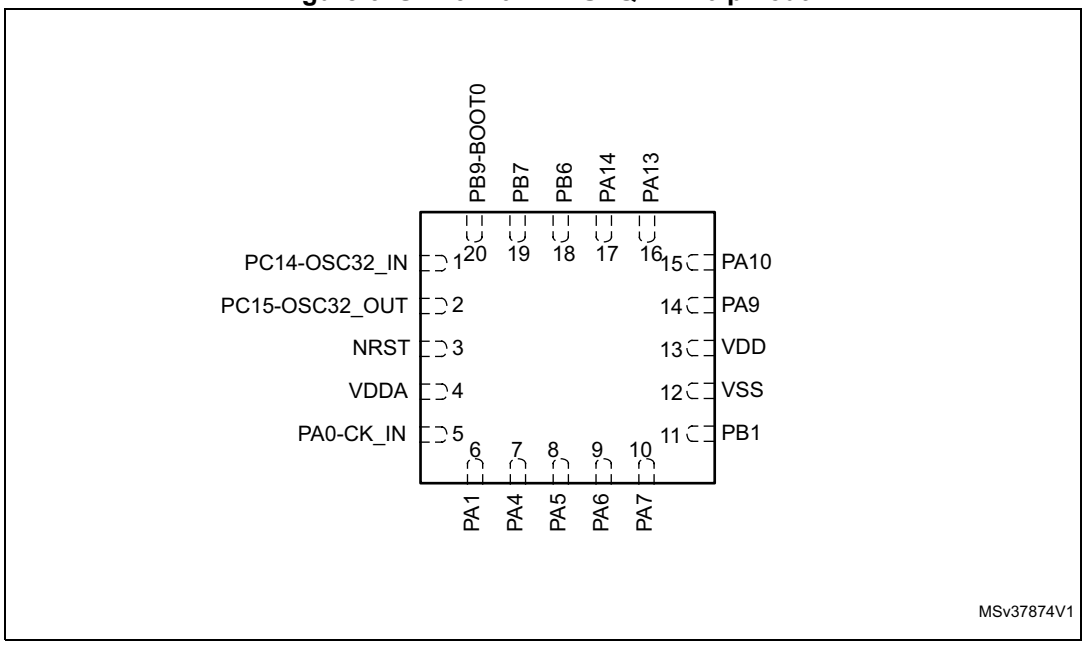

1. The above figure shows the package top view.

Figure 7. STM32L021x4 TSSOP20 pinout

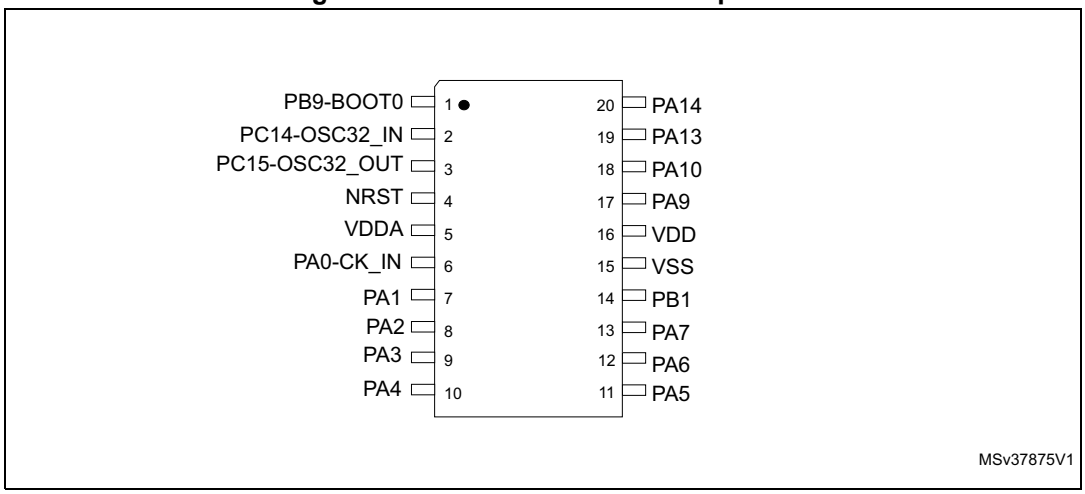

1. The above figure shows the package top view.

Figure 8. STM32L021x4 TSSOP14 pinout

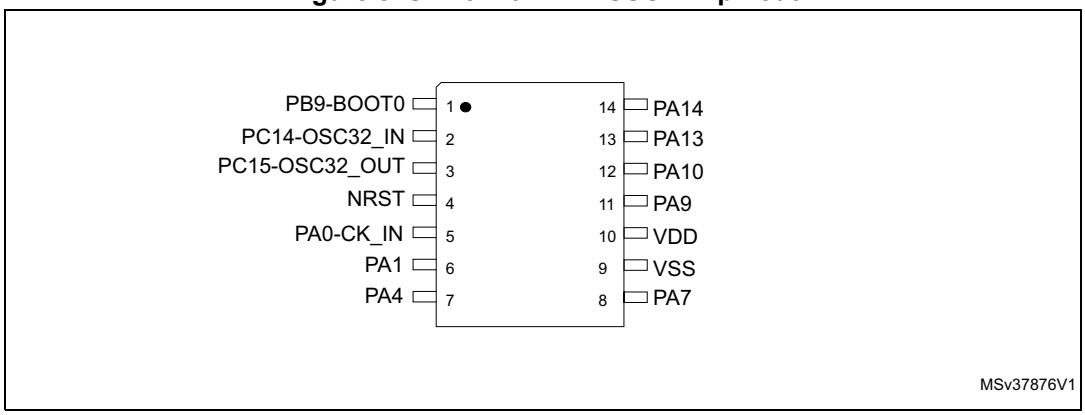

1. The above figure shows the package top view.

Table 11. Legend/abbreviations used in the pinout table

Name	Abbreviation	Definition
Pin name	Unless otherwise specified in brackets below the pin name, the pin function during and after reset is the same as the actual pin name	
Pin type	S	Supply pin
	I	Input only pin
	I/O	Input / output pin
I/O structure	FT	5 V tolerant I/O
	FTf	5 V tolerant I/O, FM+ capable
	TTa	3.3 V tolerant I/O directly connected to the ADC
	TC	Standard 3.3V I/O
	B	Dedicated BOOT0 pin
	RST	Bidirectional reset pin with embedded weak pull-up resistor

Table 11. Legend/abbreviations used in the pinout table (continued)

Name		Abbreviation	Definition
Notes		Unless otherwise specified by a note, all I/Os are set as floating inputs during and after reset.	
Pin functions	Alternate functions	Functions selected through GPIOx_AFR registers	
	Additional functions	Functions directly selected/enabled through peripheral registers	

Table 12. Pin definitions

Pin number						Pin name (function after reset)	Pin type	I/O structure	Notes	Pin functions	
TSSOP14	UFQFPN20	TSSOP20	UFQFPN28	LQFP32	UFQFPN32[1]					Alternate functions	Additional functions
2	1	2	2	2	2	PC14-OSC32_IN	I/O	FT	-	-	OSC32_IN
3	2	3	3	3	3	PC15-OSC32_OUT	I/O	TC	-	-	OSC32_OUT
4	3	4	4	4	4	NRST	I/O	RST	(2)	-	-
10	4	5	5	5	5	VDDA	S	-	(3)(4)	-	-
5	5	6	6	6	6	PA0-CK_IN	I/O	TTa	-	USART2_RX, LPTIM1_IN1, TIM2_CH1, USART2_CTS, TIM2_ETR, LPUART1_RX, COMP1_OUT	COMP1_INM, ADC_IN0, RTC_TAMP2/WKUP1 /CK_IN
6	6	7	7	7	7	PA1	I/O	FT	-	EVENTOUT, LPTIM1_IN2, TIM2_CH2, I2C1_SMBA, USART2_RTS_DE, TIM21_ETR, LPUART1_TX	COMP1_INP, ADC_IN1
-	-	8	8	8	8	PA2	I/O	TTa	-	TIM21_CH1, TIM2_CH3, USART2_TX, LPUART1_TX, COMP2_OUT	COMP2_INM, ADC_IN2, RTC_TAMP3/RTC_TS/RTC_OUT/WKUP3

Table 12. Pin definitions (continued)

Pin number						Pin name (function after reset)	Pin type	I/O structure	Notes	Pin functions	
TSSOP14	UFQFPN20	TSSOP20	UFQFPN28	LQFP32	UFQFPN32[1]					Alternate functions	Additional functions
-	-	9	9	9	9	PA3	I/O	FT	-	TIM21_CH2, TIM2_CH4, USART2_RX, LPUART1_RX	COMP2_INP, ADC_IN3
7	7	10	10	10	10	PA4	I/O	TTa	-	SPI1_NSS, LPTIM1_IN1, LPTIM1_ETR, I2C1_SCL, USART2_CK, TIM2_ETR, LPUART1_TX, COMP2_OUT	COMP1_INM, COMP2_INM, ADC_IN4
-	8	11	11	11	11	PA5	I/O	TTa	-	SPI1_SCK, LPTIM1_IN2, TIM2_ETR, TIM2_CH1	COMP1_INM, COMP2_INM, ADC_IN5
-	9	12	12	12	12	PA6	I/O	FT	-	SPI1_MISO, LPTIM1_ETR, LPUART1_CTS, EVENTOUT, COMP1_OUT	ADC_IN6
8	10	13	13	13	13	PA7	I/O	FT	-	SPI1_MOSI, LPTIM1_OUT, USART2_CTS, TIM21_ETR, EVENTOUT, COMP2_OUT	COMP2_INP, ADC_IN7
-	-	-	14	14	14	PB0	I/O	FT	-	EVENTOUT, SPI1_MISO, TIM2_CH2, USART2_RTS_DE, TIM2_CH3	ADC_IN8, VREF_OUT
-	11	14	15	15	15	PB1	I/O	FT	-	USART2_CK, SPI1_MOSI, LPTIM1_IN1, LPUART1_RTS_DE, TIM2_CH4	ADC_IN9, VREF_OUT
-	-	-	-	-	16	PB2	I/O	FT	-	LPTIM1_OUT	-

Table 12. Pin definitions (continued)

Pin number						Pin name (function after reset)	Pin type	I/O structure	Notes	Pin functions	
TSSOP14	UFQFPN20	TSSOP20	UFQFPN28	LQFP32	UFQFPN32[1]					Alternate functions	Additional functions
9	12	15	16	16	-	VSS	S	-	(5)	-	-
10	13	16	17	17	17	VDD	S	-	(6)	-	-
-	-	-	18	18	18	PA8	I/O	FT	-	MCO, LPTIM1_IN1, EVENTOUT, USART2_CK, TIM2_CH1	-
11	14	17	19	19	19	PA9	I/O	FTf	-	MCO, I2C1_SCL, LPTIM1_OUT, USART2_TX, TIM21_CH2, COMP1_OUT	-
12	15	18	20	20	20	PA10	I/O	FTf	(7)	TIM21_CH1, I2C1_SDA, RTC_REFIN, USART2_RX, TIM2_CH3, COMP1_OUT	-
-	-	-	-	21	21	PA11	I/O	FT	-	SPI1_MISO, LPTIM1_OUT, EVENTOUT, USART2_CTS, TIM21_CH2, COMP1_OUT	-
-	-	-	-	22	22	PA12	I/O	FT	-	SPI1_MOSI, EVENTOUT, USART2_RTS_DE, COMP2_OUT	-
13	16	19	21	23	23	PA13	I/O	FTf	-	SWDIO, LPTIM1_ETR, I2C1_SDA, SPI1_SCK, LPUART1_RX, COMP1_OUT	-

Table 12. Pin definitions (continued)

Pin number						Pin name (function after reset)	Pin type	I/O structure	Notes	Pin functions	
TSSOP14	UFQFPN20	TSSOP20	UFQFPN28	LQFP32	UFQFPN32[1]					Alternate functions	Additional functions
14	17	20	22	24	24	PA14	I/O	FT	(7)	SWCLK, LPTIM1_OUT, I2C1_SMBA, USART2_TX, SPI1_MISO, LPUART1_TX, COMP2_OUT	-
-	-	-	23	25	25	PA15	I/O	FT	-	SPI1_NSS, TIM2_ETR, EVENTOUT, USART2_RX, TIM2_CH1	-
-	-	-	24	26	26	PB3	I/O	FT	-	SPI1_SCK, TIM2_CH2, EVENTOUT	COMP2_INM
-	-	-	25	27	27	PB4	I/O	FT	-	SPI1_MISO, EVENTOUT	COMP2_INP
-	-	-	26	28	28	PB5	I/O	FT	-	SPI1_MOSI, LPTIM1_IN1, I2C1_SMBA, TIM21_CH1	COMP2_INP
-	18	-	27	29	29	PB6	I/O	FTf	-	USART2_TX, I2C1_SCL, LPTIM1_ETR, TIM2_CH3, LPUART1_TX	COMP2_INP
-	19	-	28	30	30	PB7	I/O	FTf	-	USART2_RX, I2C1_SDA, LPTIM1_IN2, TIM2_CH4, LPUART1_RX	COMP2_INP, VREF_PVD_IN
1	20	1	1	31	31	PB9-BOOT0	I	B	-	-	BOOT0 (Boot memory selection)
-	-	-	-	-	32	PB8	I/O	FTf	-	USART2_TX, EVENTOUT, I2C1_SCL, SPI1_NSS	-

Table 12. Pin definitions (continued)

Pin number						Pin name (function after reset)	Pin type	I/O structure	Notes	Pin functions	
TSSOP14	UFQFPN20	TSSOP20	UFQFPN28	LQFP32	UFQFPN32[1]					Alternate functions	Additional functions
-	-	-	-	32	-	VSS	S		(4)	-	-
-	-	-	-	1	1	VDD	S	-	(5)	-	-

1. VSS pins are connected to the exposed pad (see *Figure 34: UFQFPN32 - 32-pin, 5x5 mm, 0.5 mm pitch ultra thin fine pitch quad flat package outline*).
2. Device reset input/internal reset output (active low).
3. Analog power supply.
4. On TSSOP14 package, V_{DDA} is internally connected to V_{DD}.
5. Digital and analog ground.
6. Digital power supply.
7. PA14 pin on TSSOP14 package acts as an output pin when the embedded bootloader is active (SPI1_MISO). On empty devices (devices from factory), the bootloader is active due to the empty check mechanism (refer to RM0377 reference manual). PA14 pin also acts as SWCLK. When programming devices in TSSOP14 for the first time, it is necessary to use the "connect under reset" method and the SWD interface to disable the bootloader by driving this PA14/SWCLK pin.

Table 13. Alternate functions

Ports		AF0	AF1	AF2	AF3	AF4	AF5	AF6	AF7
		SPI1/USART2/ TIM21/ EVENTOUT/ SYS_AF	SPI1/I2C1/ LPTIM	LPUART1/ LPTIM/TIM2/ EVENTOUT/ SYS_AF	I2C1/LPTIM/ EVENTOUT	I2C1/USART2/LPUART1/ EVENTOUT	SPI1/TIM2/21	LPUART1/EVEVENTOUT	COMP1/2
Port A	PA0	USART2_RX	LPTIM1_IN1	TIM2_CH1	-	USART2_CTS	TIM2_ETR	LPUART1_RX	COMP1_OUT
	PA1	EVENTOUT	LPTIM1_IN2	TIM2_CH2	I2C1_SMBA	USART2_RTS_DE	TIM21_ETR	LPUART1_TX	-
	PA2	TIM21_CH1	-	TIM2_CH3	-	USART2_TX	-	LPUART1_TX	COMP2_OUT
	PA3	TIM21_CH2	-	TIM2_CH4	-	USART2_RX	-	LPUART1_RX	-
	PA4	SPI1_NSS	LPTIM1_IN1	LPTIM1_ETR	I2C1_SCL	USART2_CK	TIM2_ETR	LPUART1_TX	COMP2_OUT
	PA5	SPI1_SCK	LPTIM1_IN2	TIM2_ETR	-	-	TIM2_CH1	-	-
	PA6	SPI1_MISO	LPTIM1_ETR	-	-	LPUART1_CTS	-	EVENTOUT	COMP1_OUT
	PA7	SPI1_MOSI	LPTIM1_OUT	-	-	USART2_CTS	TIM21_ETR	EVENTOUT	COMP2_OUT
	PA8	MCO	-	LPTIM1_IN1	EVENTOUT	USART2_CK	TIM2_CH1	-	-
	PA9	MCO	I2C1_SCL	LPTIM1_OUT	-	USART2_TX	TIM21_CH2	-	COMP1_OUT
	PA10	TIM21_CH1	I2C1_SDA	RTC_REFIN	-	USART2_RX	TIM2_CH3	-	COMP1_OUT
	PA11	SPI1_MISO	LPTIM1_OUT	EVENTOUT	-	USART2_CTS	TIM21_CH2	-	COMP1_OUT
	PA12	SPI1_MOSI	-	EVENTOUT	-	USART2_RTS_DE	-	-	COMP2_OUT
	PA13	SWDIO	LPTIM1_ETR	-	I2C1_SDA	-	SPI1_SCK	LPUART1_RX	COMP1_OUT
	PA14	SWCLK	LPTIM1_OUT	-	I2C1_SMBA	USART2_TX	SPI1_MISO	LPUART1_TX	COMP2_OUT
	PA15	SPI1_NSS	-	TIM2_ETR	EVENTOUT	USART2_RX	TIM2_CH1	-	-

Table 13. Alternate functions (continued)

Ports		AF0	AF1	AF2	AF3	AF4	AF5	AF6	AF7
		SPI1/USART2/ TIM21/ EVENTOUT/ SYS_AF	SPI1/I2C1/ LPTIM	LPUART1/ LPTIM/TIM2/ EVENTOUT/ SYS_AF	I2C1/LPTIM/ EVENTOUT	I2C1/USART2/LPUART1/ EVENTOUT	SPI1/TIM2/21	LPUART1/EVEVENTOUT	COMP1/2
Port B	PB0	EVENTOUT	SPI1_MISO	TIM2_CH2	-	USART2_RTS_DE	TIM2_CH3	-	-
	PB1	USART2_CK	SPI1_MOSI	LPTIM1_IN1	-	LPUART1_RTS_DE	TIM2_CH4	-	-
	PB2	-	-	LPTIM1_OUT	-	-	-	-	-
	PB3	SPI1_SCK	-	TIM2_CH2	-	EVENTOUT	-	-	-
	PB4	SPI1_MISO	-	EVENTOUT	-	-	-	-	-
	PB5	SPI1_MOSI	-	LPTIM1_IN1	I2C1_SMBA	-	TIM21_CH1	-	-
	PB6	USART2_TX	I2C1_SCL	LPTIM1_ETR	-	-	TIM2_CH3	LPUART1_TX	-
	PB7	USART2_RX	I2C1_SDA	LPTIM1_IN2	-	-	TIM2_CH4	LPUART1_RX	-
	PB8	USART2_TX	-	EVENTOUT	-	I2C1_SCL	SPI1_NSS	-	-
	PB9	-	-	-	-	-	-	-	-
Port C	PC14	-	-	-	-	-	-	-	-
	PC15	-	-	-	-	-	-	-	-

5 Memory mapping

Refer to the product line reference manual for details on the memory mapping as well as the boundary addresses for all peripherals.

6 Electrical characteristics

6.1 Parameter conditions

Unless otherwise specified, all voltages are referenced to V_{SS}.

6.1.1 Minimum and maximum values

Unless otherwise specified the minimum and maximum values are guaranteed in the worst conditions of ambient temperature, supply voltage and frequencies by tests in production on 100% of the devices with an ambient temperature at T_A = 25 °C and T_A = $T_A$max (given by the selected temperature range).

Data based on characterization results, design simulation and/or technology characteristics are indicated in the table footnotes and are not tested in production. Based on characterization, the minimum and maximum values refer to sample tests and represent the mean value plus or minus three times the standard deviation (mean±3σ).

6.1.2 Typical values

Unless otherwise specified, typical data are based on T_A = 25 °C, V_{DD} = 3.6 V (for the 1.65 V ≤ V_{DD} ≤ 3.6 V voltage range). They are given only as design guidelines and are not tested.

Typical ADC accuracy values are determined by characterization of a batch of samples from a standard diffusion lot over the full temperature range, where 95% of the devices have an error less than or equal to the value indicated (mean±2σ).

6.1.3 Typical curves

Unless otherwise specified, all typical curves are given only as design guidelines and are not tested.

6.1.4 Loading capacitor

The loading conditions used for pin parameter measurement are shown in *Figure 9*.

6.1.5 Pin input voltage

The input voltage measurement on a pin of the device is described in *Figure 10*.

Figure 9. Pin loading conditions

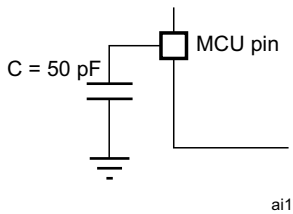

Figure 10. Pin input voltage

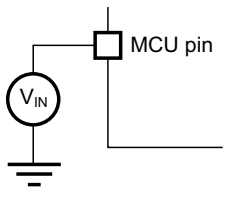

6.1.6 Power supply scheme

Figure 11. Power supply scheme

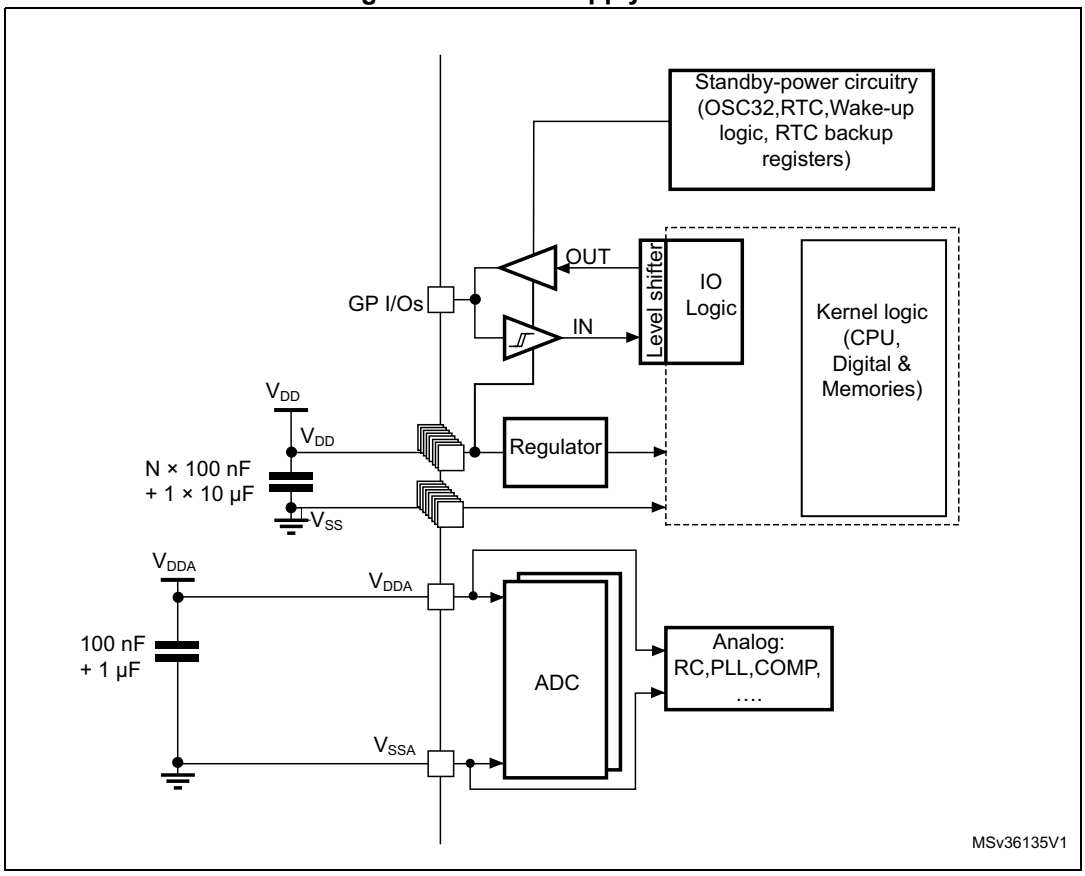

1. On TSSOP14 package, V_{DDA} is internally connected to V_{DD}.
2. V_{SSA} is internally connected to V_{SS} on all packages.

6.1.7 Current consumption measurement

Figure 12. Current consumption measurement scheme

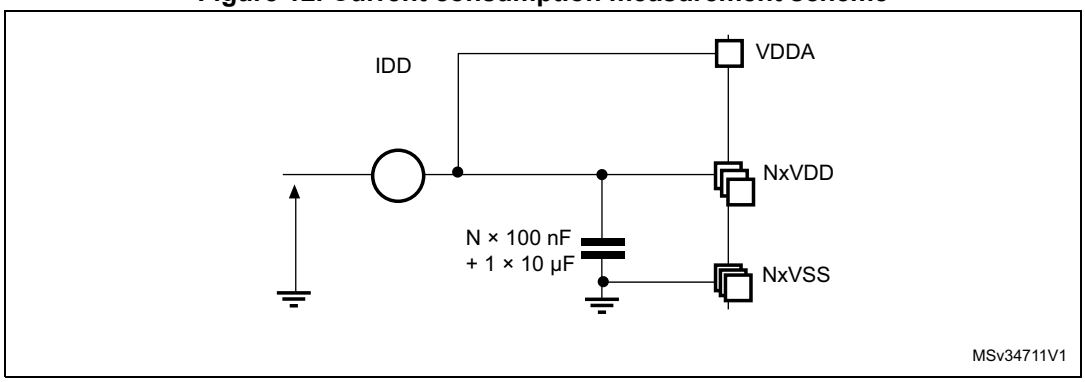

6.2 Absolute maximum ratings

Stresses above the absolute maximum ratings listed in *Table 14: Voltage characteristics*, *Table 15: Current characteristics*, and *Table 16: Thermal characteristics* may cause permanent damage to the device. These are stress ratings only and functional operation of the device at these conditions is not implied. Exposure to maximum rating conditions for extended periods may affect device reliability. Device mission profile (application conditions) is compliant with JEDEC JESD47 Qualification Standard. Extended mission profiles are available on demand.

Table 14. Voltage characteristics

Symbol	Ratings	Min	Max	Unit
V_{DD}–V_{SS}	External main supply voltage (including V_{DDA}, V_{DD})(1)	–0.3	4.0	V
V_{IN}(2)	Input voltage on FT and FTf pins	V_{SS} –0.3	V_{DD}+4.0	
	Input voltage on TC pins	V_{SS} –0.3	4.0	
	Input voltage on BOOT0	V_{SS}	V_{DD} +4.0	
	Input voltage on any other pin	V_{SS} –0.3	4.0	
$\lvert\Delta V_{DD}\rvert$	Variations between different V_{DDx} power pins	-	50	mV
$\lvert V_{DDA}-V_{DDx}\rvert$	Variations between any V_{DDx} and V_{DDA} power pins(3)	-	300	
$\lvert\Delta V_{SS}\rvert$	Variations between all different ground pins	-	50	
$V_{ESD(HBM)}$	Electrostatic discharge voltage (human body model)	see *Section 6.3.11*		

1. All main power (V_{DD}, V_{DDA}) and ground (V_{SS}, V_{SSA}) pins must always be connected to the external power supply, in the permitted range.
2. V_{IN} maximum must always be respected. Refer to *Table 15* for maximum allowed injected current values.
3. It is recommended to power V_{DD} and V_{DDA} from the same source. A maximum difference of 300 mV between V_{DD} and V_{DDA} can be tolerated during power-up and device operation. its value does not need to respect this rule.

Table 15. Current characteristics

Symbol	Ratings	Max.	Unit
ΣI_{VDD} (2)	Total current into sum of all V_{DD} power lines (source) (1)	105	mA
ΣI_{VSS} (2)	Total current out of sum of all V_{SS} ground lines (sink) (1)	105	
$I_{VDD(PIN)}$	Maximum current into each V_{DD} power pin (source) (1)	100	
$I_{VSS(PIN)}$	Maximum current out of each V_{SS} ground pin (sink) (1)	100	
I_{IO}	Output current sunk by any I/O and control pin except FTf pins	16	
	Output current sunk by FTf pins	22	
	Output current sourced by any I/O and control pin	-16	
$\Sigma I_{IO(PIN)}$ (3)	Total output current sunk by sum of all IOs and control pins (4)	45	
	Total output current sourced by sum of all IOs and control pins	-45	
$\Sigma I_{IO(PIN)}$	Total output current sunk by sum of all IOs and control pins (2)	90	
	Total output current sourced by sum of all IOs and control pins (2)	-90	
$I_{INJ(PIN)}$	Injected current on FT, FFf, RST and B pins	-5/+0 (5)	
	Injected current on TC pin	± 5 (6)	
$\Sigma I_{INJ(PIN)}$	Total injected current (sum of all I/O and control pins) (7)	± 25	

1. All main power (V_{DD}, V_{DDA}) and ground (V_{SS}, V_{SSA}) pins must always be connected to the external power supply, in the permitted range.
2. This current consumption must be correctly distributed over all I/Os and control pins. The total output current must not be sunk/sourced between two consecutive power supply pins referring to high pin count LQFP packages.
3. These values apply only to STM32L021GxUx part number (UFQFPN28 package).
4. This current consumption must be correctly distributed over all I/Os and control pins. In particular, it must be located the closest possible to the couple of supply and ground, and distributed on both sides.
5. Positive current injection is not possible on these I/Os. A negative injection is induced by $V_{IN}<V_{SS}$. $I_{INJ(PIN)}$ must never be exceeded. Refer to *Table 14* for maximum allowed input voltage values.
6. A positive injection is induced by $V_{IN} > V_{DD}$ while a negative injection is induced by $V_{IN} < V_{SS}$. $I_{INJ(PIN)}$ must never be exceeded. Refer to *Table 14: Voltage characteristics* for the maximum allowed input voltage values.
7. When several inputs are submitted to a current injection, the maximum $\Sigma I_{INJ(PIN)}$ is the absolute sum of the positive and negative injected currents (instantaneous values).

Table 16. Thermal characteristics

Symbol	Ratings	Value	Unit
T_{STG}	Storage temperature range	–65 to +150	°C
T_J	Maximum junction temperature	150	°C

6.3 Operating conditions

6.3.1 General operating conditions

Table 17. General operating conditions

Symbol	Parameter	Conditions	Min	Max	Unit
f_{HCLK}	Internal AHB clock frequency	-	0	32	MHz
f_{PCLK1}	Internal APB1 clock frequency	-	0	32	
f_{PCLK2}	Internal APB2 clock frequency	-	0	32	
V_{DD}	Standard operating voltage	BOR detector disabled	1.65	3.6	V
		BOR detector enabled, at power on	1.8	3.6	
		BOR detector disabled, after power on	1.65	3.6	
V_{DDA}	Analog operating voltage (all features)	Must be the same voltage as V_{DD}(1)	1.65	3.6	V
V_{IN}	Input voltage on FT, FTf and RST pins(2)	2.0 V ≤ V_{DD} ≤3.6 V	-0.3	5.5	V
		1.65 V ≤ V_{DD} ≤2.0 V	-0.3	5.2	
	Input voltage on BOOT0 pin	-	0	5.5	
	Input voltage on TC pin	-	-0.3	V_{DD}+0.3	
P_D	Power dissipation at T_A = 85 °C (range 6) or T_A =105 °C (rage 7) (3)	LQFP32 package	-	333	mW
		UFQFPN32 package	-	513	
		UFQFPN28 package	-	206	
		TSSOP20 package	-	270	
		UFQFPN20 package	-	196	
		TSSOP14 package	-	210	
	Power dissipation at T_A = 125 °C (range 3) (3)	LQFP32 package	-	83	
		UFQFPN32 package	-	128	
		UFQFPN28 package	-	52	
		TSSOP20 package	-	67	
		UFQFPN20 package	-	49	
		TSSOP14 package	-	53	

Table 17. General operating conditions (continued)

Symbol	Parameter	Conditions	Min	Max	Unit
T_A	Temperature range	Maximum power dissipation (range 6)	–40	85	°C
		Maximum power dissipation (range 7)	–40	105	
		Maximum power dissipation (range 3)	–40	125	
T_J	Junction temperature range (range 6)	-40 °C ≤ T_A ≤ 85 °	–40	105	
	Junction temperature range (range 7)	-40 °C ≤ T_A ≤ 105 °C	–40	125	
	Junction temperature range (range 3)	-40 °C ≤ T_A ≤ 125 °C	–40	130	

1. It is recommended to power V_{DD} and V_{DDA} from the same source. A maximum difference of 300 mV between V_{DD} and V_{DDA} can be tolerated during power-up and normal operation.
2. To sustain a voltage higher than V_{DD}+0.3V, the internal pull-up/pull-down resistors must be disabled.
3. If T_A is lower, higher P_D values are allowed as long as T_J does not exceed T_J max (see *Table 16: Thermal characteristics on page 47*).

6.3.2 Embedded reset and power control block characteristics

The parameters given in the following table are derived from the tests performed under the ambient temperature condition summarized in *Table 17*.

Table 18. Embedded reset and power control block characteristics

Symbol	Parameter	Conditions	Min	Typ	Max	Unit
t_{VDD}(1)	V_{DD} rise time rate	BOR detector enabled	0	-	∞	µs/V
		BOR detector disabled	0	-	1000	
	V_{DD} fall time rate	BOR detector enabled	20	-	∞	
		BOR detector disabled	0	-	1000	
$T_{RSTTEMPO}$(1)	Reset temporization	V_{DD} rising, BOR enabled	-	2	3.3	ms
		V_{DD} rising, BOR disabled(2)	0.4	0.7	1.6	
$V_{POR/PDR}$	Power on/power down reset threshold	Falling edge	1	1.5	1.65	V
		Rising edge	1.3	1.5	1.65	
V_{BOR0}	Brown-out reset threshold 0	Falling edge	1.67	1.7	1.74	
		Rising edge	1.69	1.76	1.8	
V_{BOR1}	Brown-out reset threshold 1	Falling edge	1.87	1.93	1.97	
		Rising edge	1.96	2.03	2.07	
V_{BOR2}	Brown-out reset threshold 2	Falling edge	2.22	2.30	2.35	
		Rising edge	2.31	2.41	2.44	

Table 18. Embedded reset and power control block characteristics (continued)

Symbol	Parameter	Conditions	Min	Typ	Max	Unit
V_{BOR3}	Brown-out reset threshold 3	Falling edge	2.45	2.55	2.6	V
		Rising edge	2.54	2.66	2.7	
V_{BOR4}	Brown-out reset threshold 4	Falling edge	2.68	2.8	2.85	
		Rising edge	2.78	2.9	2.95	
V_{PVD0}	Programmable voltage detector threshold 0	Falling edge	1.8	1.85	1.88	
		Rising edge	1.88	1.94	1.99	
V_{PVD1}	PVD threshold 1	Falling edge	1.98	2.04	2.09	
		Rising edge	2.08	2.14	2.18	
V_{PVD2}	PVD threshold 2	Falling edge	2.20	2.24	2.28	
		Rising edge	2.28	2.34	2.38	
V_{PVD3}	PVD threshold 3	Falling edge	2.39	2.44	2.48	
		Rising edge	2.47	2.54	2.58	
V_{PVD4}	PVD threshold 4	Falling edge	2.57	2.64	2.69	
		Rising edge	2.68	2.74	2.79	
V_{PVD5}	PVD threshold 5	Falling edge	2.77	2.83	2.88	
		Rising edge	2.87	2.94	2.99	
V_{PVD6}	PVD threshold 6	Falling edge	2.97	3.05	3.09	
		Rising edge	3.08	3.15	3.20	
V_{hyst}	Hysteresis voltage	BOR0 threshold	-	40	-	mV
		All BOR and PVD thresholds excepting BOR0	-	100	-	

1. Guaranteed by characterization results, not tested in production.
2. Valid for device version without BOR at power up. Please see option "D" in Ordering information scheme for more details.

6.3.3 Embedded internal reference voltage

The parameters given in *Table 20* are based on characterization results, unless otherwise specified.

Table 19. Embedded internal reference voltage calibration values

Calibration value name	Description	Memory address
VREFINT_CAL	Raw data acquired at temperature of 25°C V_{DDA}= 3 V	0x1FF8 0078 - 0x1FF8 0079

Table 20. Embedded internal reference voltage(1)

Symbol	Parameter	Conditions	Min	Typ	Max	Unit
$V_{REFINT\ out}$(2)	Internal reference voltage	– 40 °C < T_J < +125 °C	1.202	1.224	1.242	V
$T_{VREFINT}$	Internal reference startup time	-	-	2	3	ms
V_{VREF_MEAS}	V_{DDA} voltage during V_{REFINT} factory measure	-	2.99	3	3.01	V
A_{VREF_MEAS}	Accuracy of factory-measured V_{REFINT} value(3)	Including uncertainties due to ADC and V_{DDA} values	-	-	±5	mV
T_{Coeff}(4)	Temperature coefficient	–40 °C < T_J < +125 °C	-	25	100	ppm/°C
		0 °C < T_J < +50 °C	-	-	20	
A_{Coeff}(4)	Long-term stability	1000 hours, T= 25 °C	-	-	1000	ppm
$V_{DDCoeff}$(4)	Voltage coefficient	3.0 V < V_{DDA} < 3.6 V	-	-	2000	ppm/V
$T_{S_vrefint}$(4)(5)	ADC sampling time when reading the internal reference voltage	-	5	10	-	µs
T_{ADC_BUF}(4)	Startup time of reference voltage buffer for ADC	-	-	-	10	µs
I_{BUF_ADC}(4)	Consumption of reference voltage buffer for ADC	-	-	13.5	25	µA
I_{VREF_OUT}(4)	VREF_OUT output current(6)	-	-	-	1	µA
C_{VREF_OUT}(4)	VREF_OUT output load	-	-	-	50	pF
I_{LPBUF}(4)	Consumption of reference voltage buffer for VREF_OUT and COMP	-	-	730	1200	nA
V_{REFINT_DIV1}(4)	1/4 reference voltage	-	24	25	26	% V_{REFINT}
V_{REFINT_DIV2}(4)	1/2 reference voltage	-	49	50	51	
V_{REFINT_DIV3}(4)	3/4 reference voltage	-	74	75	76	

1. Refer to *Table 32: Peripheral current consumption in Stop and Standby mode* for the value of the internal reference current consumption (I_{REFINT}).
2. Guaranteed by test in production.
3. The internal V_{REF} value is individually measured in production and stored in dedicated EEPROM bytes.

4. Guaranteed by design, not tested in production.
5. Shortest sampling time can be determined in the application by multiple iterations.
6. To guarantee less than 1% VREF_OUT deviation.

6.3.4 Supply current characteristics

The current consumption is a function of several parameters and factors such as the operating voltage, temperature, I/O pin loading, device software configuration, operating frequencies, I/O pin switching rate, program location in memory and executed binary code. The current consumption is measured as described in *Figure 12: Current consumption measurement scheme*.

All Run-mode current consumption measurements given in this section are performed with a reduced code that gives a consumption equivalent to Dhrystone 2.1 code if not specified otherwise.

The current consumption values are derived from the tests performed under ambient temperature and V_{DD} supply voltage conditions summarized in *Table 17: General operating conditions* unless otherwise specified.

The MCU is placed under the following conditions:

- All I/O pins are configured in analog input mode
- All peripherals are disabled except when explicitly mentioned
- The Flash memory access time and prefetch is adjusted depending on f_{HCLK} frequency and voltage range to provide the best CPU performance unless otherwise specified.
- When the peripherals are enabled $f_{APB1} = f_{APB2} = f_{APB}$
- When PLL is ON, the PLL inputs are equal to HSI = 16 MHz (if internal clock is used) or HSE = 16 MHz (if HSE bypass mode is used)
- The HSE user clock is applied to CK_IN. It follows the characteristic specified in *Table 34: High-speed external user clock characteristics*
- For maximum current consumption $V_{DD} = V_{DDA} = 3.6$ V is applied to all supply pins
- For typical current consumption $V_{DD} = V_{DDA} = 3.0$ V is applied to all supply pins if not specified otherwise

Table 21. Current consumption in Run mode, code with data processing running from Flash

Symbol	Parameter	Conditions		f_{HCLK}	Typ	Max(1)	Unit
I_{DD} (Run from Flash)	Supply current in Run mode, code executed from Flash	$f_{HSE} = f_{HCLK}$ up to 16 MHz included, $f_{HSE} = f_{HCLK}/2$ above 16 MHz (PLL ON)(2)	Range 3, V_{CORE}=1.2 V VOS[1:0]=11	1 MHz	140	180	µA
				2 MHz	245	290	
				4 MHz	460	540	
			Range 2, V_{CORE}=1.5 V, VOS[1:0]=10,	4 MHz	0.56	0.65	mA
				8 MHz	1.1	1.3	
				16 MHz	2.1	2.4	
			Range 1, V_{CORE}=1.8 V, VOS[1:0]=01	8 MHz	1.3	1.6	
				16 MHz	2.6	3	
				32 MHz	5.3	6.5	
		MSI clock	Range 3, V_{CORE}=1.2 V, VOS[1:0]=11	65 kHz	34.5	54	µA
				524 kHz	86	120	
				4.2 MHz	505	560	
		HSI clock	Range 2, V_{CORE}=1.5 V, VOS[1:0]=10,	16 MHz	2.2	2.6	mA
			Range 1, V_{CORE}=1.8 V, VOS[1:0]=01	32 MHz	5.4	5.9	

1. Guaranteed by characterization results at 125 °C, not tested in production, unless otherwise specified.
2. Oscillator bypassed (HSEBYP = 1 in RCC_CR register).

Table 22. Current consumption in Run mode vs code type, code with data processing running from Flash

Symbol	Parameter	Conditions			f_{HCLK}	Typ	Unit
I_{DD} (Run from Flash)	Supply current in Run mode, code executed from Flash	$f_{HSE} = f_{HCLK}$ up to 16 MHz included, $f_{HSE} = f_{HCLK}/2$ above 16 MHz (PLL ON)(1)	Range 3, V_{CORE}=1.2 V, VOS[1:0]=11	Dhrystone	4 MHz	460	µA
				CoreMark		440	
				Fibonacci		330	
				while(1)		305	
				while(1), prefetch OFF		320	
			Range 1, VOS[1:0]=01, V_{CORE}=1.8 V	Dhrystone	32 MHz	5.4	mA
				CoreMark		4.9	
				Fibonacci		5	
				while(1)		4.35	
				while(1), prefetch OFF		3.7	

1. Oscillator bypassed (HSEBYP = 1 in RCC_CR register).

Figure 13. I_{DD} vs V_{DD}, at T_A= 25 °C, Run mode, code running from Flash memory, Range 2, 16 MHz HSE, 1WS

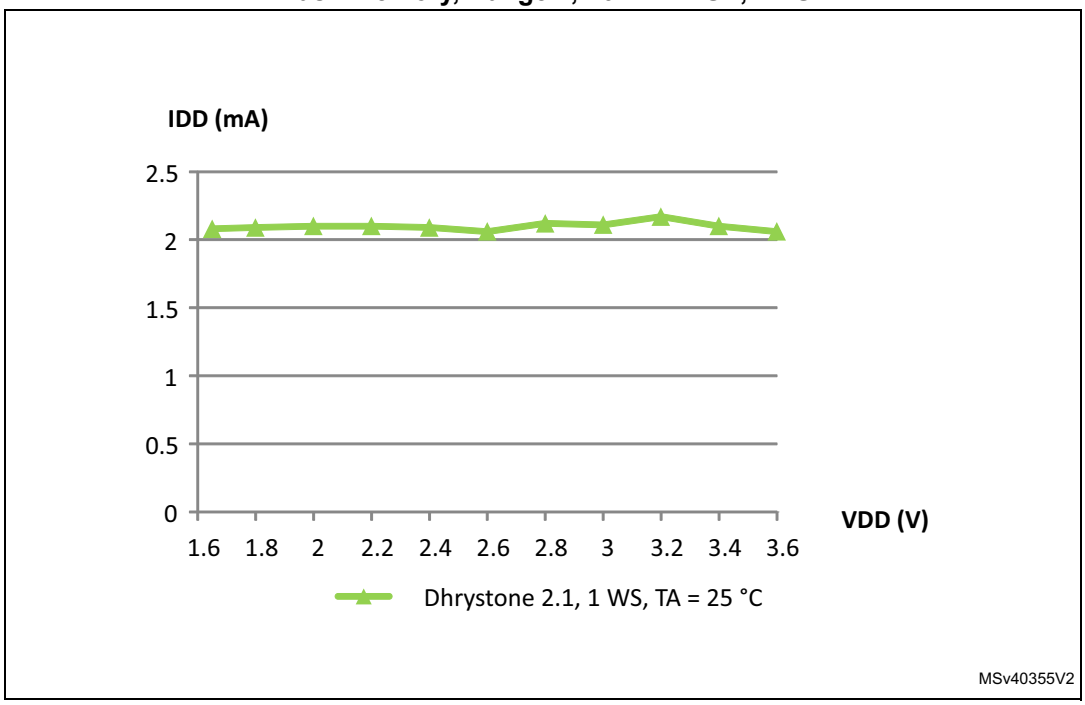

Figure 14. I_{DD} vs V_{DD}, at T_A= 25 °C, Run mode, code running from Flash memory, Range 2, HSI16, 1WS

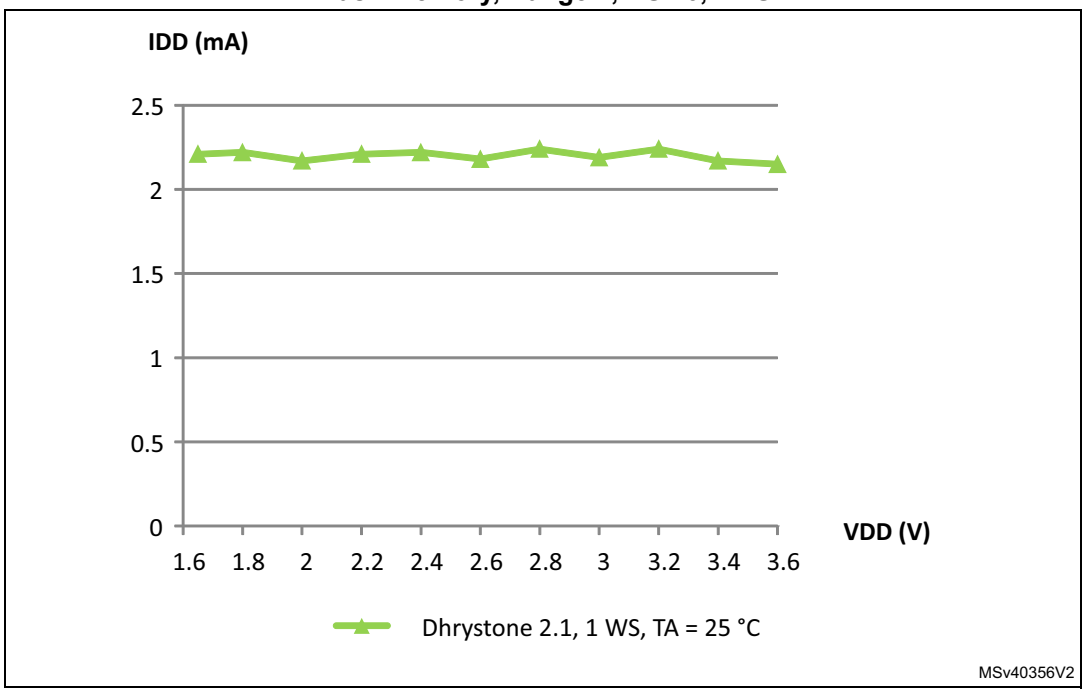

Table 23. Current consumption in Run mode, code with data processing running from RAM

Symbol	Parameter	Conditions		f_{HCLK}	Typ	Max(1)	Unit
I_{DD} (Run from RAM)	Supply current in Run mode, code executed from RAM, Flash switched OFF	$f_{HSE} = f_{HCLK}$ up to 16 MHz, included $f_{HSE} = f_{HCLK}/2$ above 16 MHz (PLL ON)(2)	Range 3, V_{CORE}=1.2 V, VOS[1:0]=11	1 MHz	115	140	µA
				2 MHz	205	240	
				4 MHz	385	420	
			Range 2, V_{CORE}=1.5 ,V, VOS[1:0]=10	4 MHz	0.48	0.55	mA
				8 MHz	0.935	1.1	
				16 MHz	1.8	2	
			Range 1, V_{CORE}=1.8 V, VOS[1:0]=01	8 MHz	1.1	1.4	
				16 MHz	2.1	2.5	
				32 MHz	4.5	4.9	
		MSI clock	Range 3, V_{CORE}=1.2 V, VOS[1:0]=11	65 kHz	22	38	µA
				524 kHz	67	91	
				4.2 MHz	415	450	
		HSI16 clock source (16 MHz)	Range 2, V_{CORE}=1.5 V, VOS[1:0]=10	16 MHz	1.95	2.2	mA
			Range 1, V_{CORE}=1.8 V, VOS[1:0]=01	32 MHz	4.7	5.2	

1. Guaranteed by characterization results at 125 °C, not tested in production, unless otherwise specified.
2. Oscillator bypassed (HSEBYP = 1 in RCC_CR register).

Table 24. Current consumption in Run mode vs code type, code with data processing running from RAM(1)

Symbol	Parameter	Conditions			f_{HCLK}	Typ	Unit
I_{DD} (Run from RAM)	Supply current in Run mode, code executed from RAM, Flash switched OFF	$f_{HSE} = f_{HCLK}$ up to 16 MHz, included, $f_{HSE} = f_{HCLK}/2$ above 16 MHz (PLL ON)(2)	Range 3, V_{CORE}=1.2 V, VOS[1:0]=11	Dhrystone	4 MHz	385	µA
				CoreMark		-(3)	
				Fibonacci		350	
				while(1)		340	
			Range 1, V_{CORE}=1.8 V, VOS[1:0]=01	Dhrystone	32 MHz	4.5	mA
				CoreMark		-(3)	
				Fibonacci		4.2	
				while(1)		3	

1. Guaranteed by characterization results, not tested in production, unless otherwise specified.
2. Oscillator bypassed (HSEBYP = 1 in RCC_CR register).
3. CoreMark code is unable to run from RAM since the RAM size is only 2 Kbytes.

Table 25. Current consumption in Sleep mode

Symbol	Parameter	Conditions		f_{HCLK}	Typ	Max(1)	Unit
I_{DD} (Sleep)	Supply current in Sleep mode, Flash OFF	f_{HSE} = f_{HCLK} up to 16 MHz included, f_{HSE} = f_{HCLK}/2 above 16 MHz (PLL ON)(2)	Range 3, V_{CORE}=1.2 V, VOS[1:0]=11	1 MHz	36.5	70	µA
				2 MHz	58	95	
				4 MHz	100	150	
			Range 2, V_{CORE}=1.5 V, VOS[1:0]=10	4 MHz	125	170	
				8 MHz	230	300	
				16 MHz	450	540	
			Range 1, V_{CORE}=1.8 V, VOS[1:0]=01	8 MHz	275	350	
				16 MHz	555	650	
				32 MHz	1350	1600	
		MSI clock	Range 3, V_{CORE}=1.2 V, VOS[1:0]=11	65 kHz	15.5	32	
				524 kHz	26.5	55	
				4.2 MHz	115	160	
		HSI16 clock source (16 MHz)	Range 2, V_{CORE}=1.5 V, VOS[1:0]=10	16 MHz	585	670	
			Range 1, V_{CORE}=1.8 V, VOS[1:0]=01	32 MHz	1500	1700	
	Supply current in Sleep mode, Flash ON	f_{HSE} = f_{HCLK} up to 16 MHz included, f_{HSE} = f_{HCLK}/2 above 16 MHz (PLL ON)(2)	Range 3, V_{CORE}=1.2 V, VOS[1:0]=11	1 MHz	49	88	
				2 MHz	69	120	
				4 MHz	115	190	
			Range 2, CORE=1.5 V, VOS[1:0]=10	4 MHz	135	200	
				8 MHz	240	340	
				16 MHz	460	650	
			Range 1, V_{CORE}=1.8 V, VOS[1:0]=01	8 MHz	290	400	
				16 MHz	565	750	
				32 MHz	1350	1900	
		MSI clock	Range 3, V_{CORE}=1.2 V, VOS[1:0]=11	65 kHz	26.5	46	
				524 kHz	38.5	70	
				4.2 MHz	125	190	
		HSI16 clock source (16 MHz)	Range 2, V_{CORE}=1.5 V, VOS[1:0]=10	16 MHz	600	760	
			Range 1, V_{CORE}=1.8 V, VOS[1:0]=01	32 MHz	1500	1850	

1. Guaranteed by characterization results at 125 °C, not tested in production, unless otherwise specified.
2. Oscillator bypassed (HSEBYP = 1 in RCC_CR register).

Table 26. Current consumption in Low-power Run mode

Symbol	Parameter	Conditions			Typ	Max(1)	Unit
I_{DD} (LP Run)	Supply current in Low-power run mode	All peripherals OFF, code executed from RAM, Flash switched OFF, V_{DD} from 1.65 V to 3.6 V	MSI clock, 65 kHz f_{HCLK} = 32 kHz	T_A = -40 °C to 25 °C	5.7	8.1	µA
				T_A = 85 °C	6.5	9	
				T_A = 105 °C	8	13	
				T_A = 125 °C	11.5	22	
			MSI clock, 65 kHz f_{HCLK} = 65 kHz	T_A =-40 °C to 25 °C	8.7	11	
				T_A = 85 °C	9.5	12	
				T_A = 105 °C	11	15	
				T_A = 125 °C	15	24	
			MSI clock, 131 kHz f_{HCLK} = 131 kHz	T_A = -40 °C to 25 °C	17	19	
				T_A = 55 °C	17	19.5	
				T_A = 85 °C	17.5	20	
				T_A = 105 °C	19	22	
				T_A = 125 °C	22.5	31	
		All peripherals OFF, code executed from Flash, V_{DD} from 1.65 V to 3.6 V	MSI clock, 65 kHz f_{HCLK} = 32 kHz	T_A = -40 °C to 25 °C	18	22	
				T_A = 85 °C	20	24	
				T_A = 105 °C	22	27	
				T_A = 125 °C	26.5	37	
			MSI clock, 65 kHz f_{HCLK} = 65 kHz	T_A = -40 °C to 25 °C	22	25	
				T_A = 85 °C	24	27	
				T_A = 105 °C	26	30	
				T_A = 125 °C	30.5	39	
			MSI clock, 131 kHz f_{HCLK} = 131 kHz	T_A = -40 °C to 25 °C	32	34	
				T_A = 55 °C	32.5	35	
				T_A = 85 °C	34	37	
				T_A = 105 °C	36	39	
				T_A = 125 °C	40	47	

1. Guaranteed by characterization results at 125 °C, not tested in production, unless otherwise specified.

Figure 15. I_{DD} vs V_{DD}, at T_A= -40/25/55/ 85/105/125 °C, Low-power run mode, code running from RAM, Range 3, MSI (Range 0) at 64 KHz, 0 WS

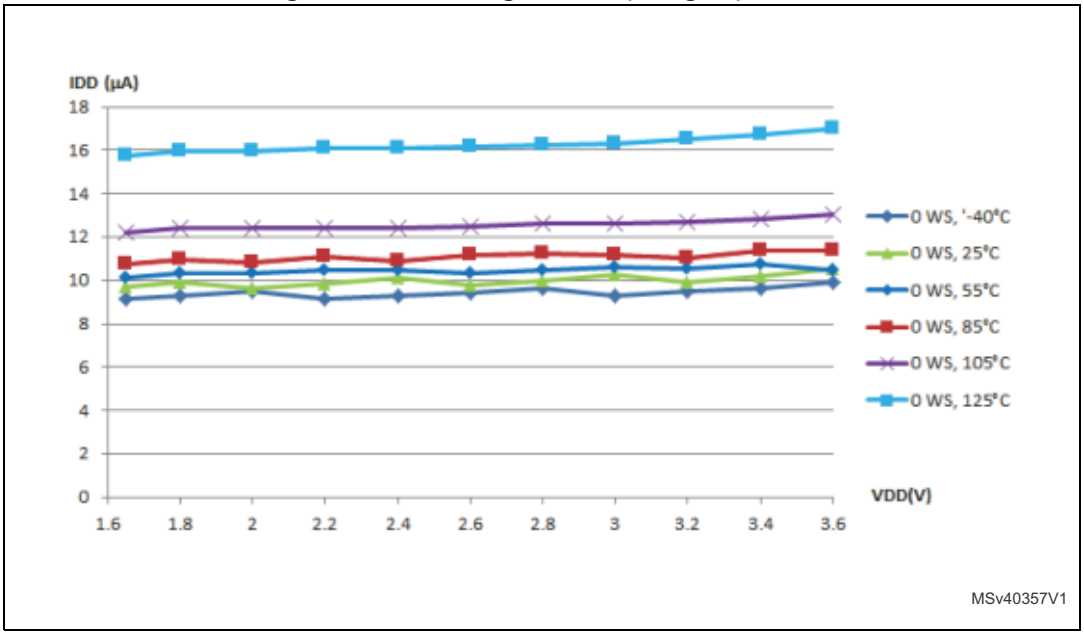

Table 27. Current consumption in Low-power Sleep mode

Symbol	Parameter	Conditions			Typ	Max(1)	Unit
I_{DD} (LP Sleep)	Supply current in Low-power sleep mode	All peripherals OFF, V_{DD} from 1.65 V to 3.6 V	MSI clock, 65 kHz f_{HCLK} = 32 kHz Flash OFF	T_A = -40 °C to 25 °C	2.5(2)	-	µA
			MSI clock, 65 kHz f_{HCLK} = 32 kHz Flash ON	T_A = -40 °C to 25 °C	13	19	
				T_A = 85 °C	15.5	20	
				T_A = 105 °C	17.5	22	
				T_A = 125 °C	21	29	
			MSI clock, 65 kHz f_{HCLK} = 65 kHz, Flash ON	T_A = -40 °C to 25 °C	13.5	19	
				T_A = 85 °C	16	20	
				T_A = 105 °C	18	22	
				T_A = 125 °C	21.5	29	
			MSI clock, 131 kHz f_{HCLK} = 131 kHz, Flash ON	T_A = -40 °C to 25 °C	15.5	21	
				T_A = 55 °C	17	22	
				T_A = 85 °C	18	23	
				T_A = 105 °C	19.5	24	
				T_A = 125 °C	23.5	31	

1. Guaranteed by characterization results at 125 °C, not tested in production, unless otherwise specified.
2. As the CPU is in Sleep mode, the difference between the current consumption with Flash memory ON and OFF (nearly 12 µA) is the same whatever the clock frequency.

Table 28. Typical and maximum current consumptions in Stop mode

Symbol	Parameter	Conditions	Typ	Max(1)	Unit
I_{DD} (Stop)	Supply current in Stop mode	T_A = -40°C to 25°C	0.34	0.99	µA
		T_A = 55°C	0.43	1.9	
		T_A= 85°C	0.94	4.2	
		T_A = 105°C	2.0	9	
		T_A = 125°C	4.9	19	

1. Guaranteed by characterization results at 125 °C, not tested in production, unless otherwise specified.

Figure 16. I_{DD} vs V_{DD}, at T_A= -40/25/55/ 85/105/125 °C, Stop mode with RTC enabled and running on LSE Low drive

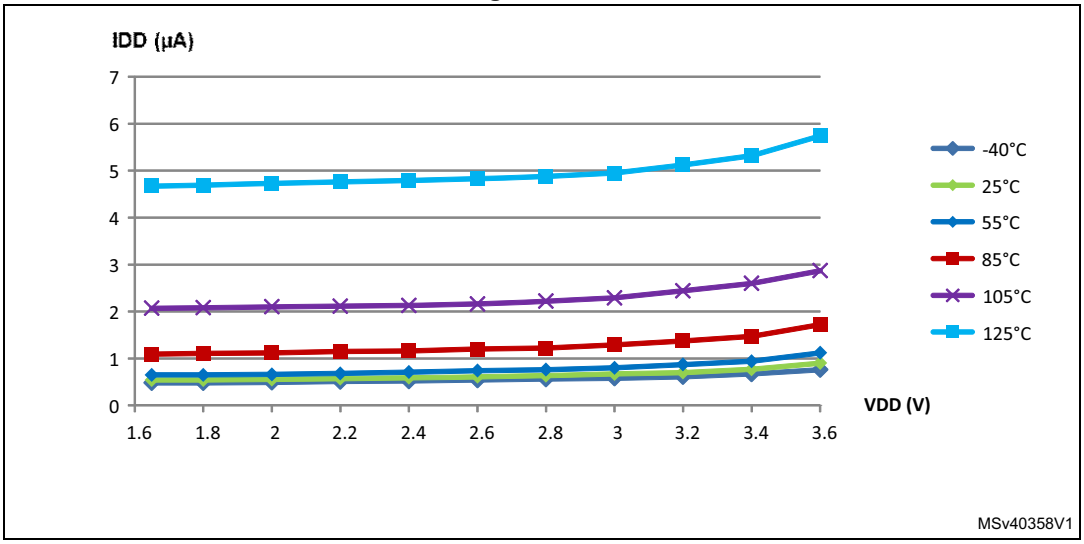

Figure 17. I_{DD} vs V_{DD}, at T_A= -40/25/55/85/105/125 °C, Stop mode with RTC disabled, all clocks OFF

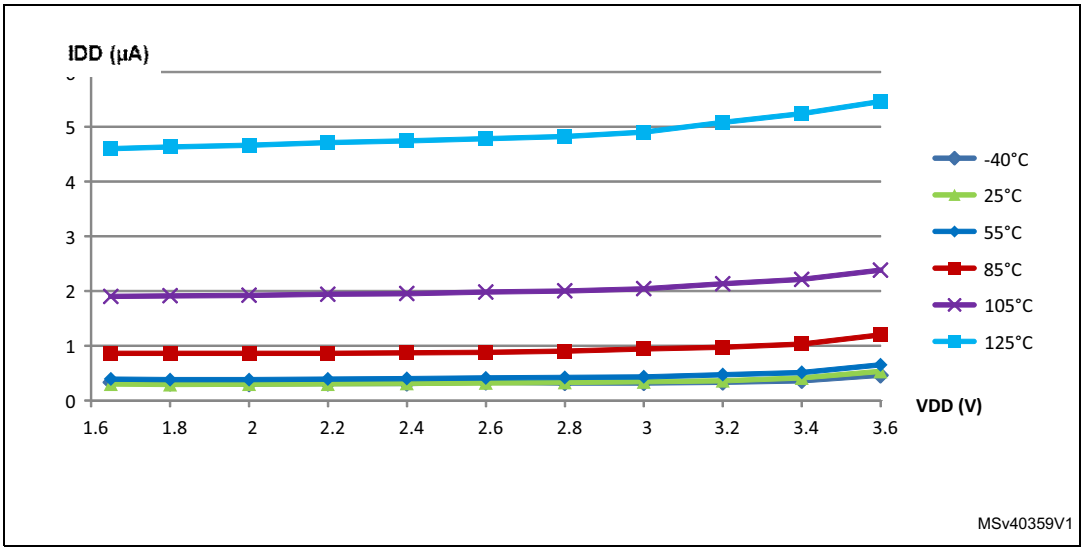

Table 29. Typical and maximum current consumptions in Standby mode

Symbol	Parameter	Conditions		Typ	Max(1)	Unit
I_{DD} (Standby)	Supply current in Standby mode	Independent watchdog and LSI enabled	T_A = -40 °C to 25 °C	0.8	1.6	µA
			T_A = 55 °C	0.9	1.8	
			T_A= 85 °C	1	2	
			T_A = 105 °C	1.25	3	
			T_A = 125 °C	2	7	
		Independent watchdog and LSI OFF	T_A = -40 °C to 25 °C	0.23	0.6	
			T_A = 55 °C	0.25	0.7	
			T_A = 85 °C	0.36	1	
			T_A = 105 °C	0.62	1.7	
			T_A = 125 °C	1.35	5	

1. Guaranteed by characterization results at 125 °C, not tested in production, unless otherwise specified

Table 30. Average current consumption during wakeup

Symbol	parameter	System frequency	Current consumption during wakeup	Unit
I_{DD} (WU from Stop)	Supply current during wakeup from Stop mode	HSI	1	mA
		HSI/4	0,7	
		MSI 4,2 MHz	0,7	
		MSI 1,05 MHz	0,4	
		MSI 65 KHz	0,1	
I_{DD} (Reset)	Reset pin pulled down	-	0,21	
I_{DD} (Power Up)	BOR ON	-	0,23	
I_{DD} (WU from StandBy)	With Fast wakeup set	MSI 2,1 MHz	0,5	
	With Fast wakeup disabled	MSI 2,1 MHz	0,12	

On-chip peripheral current consumption

The current consumption of the on-chip peripherals is given in the following tables. The MCU is placed under the following conditions:

- all I/O pins are in input mode with a static value at V_{DD} or V_{SS} (no load)
- all peripherals are disabled unless otherwise mentioned
- the given value is calculated by measuring the current consumption
  - with all peripherals clocked OFF
  - with only one peripheral clocked ON

Table 31. Peripheral current consumption in run or Sleep mode(1)

Peripheral		Typical consumption, V_{DD} = 3.0 V, T_A = 25 °C				Unit
		Range 1, V_{CORE}=1.8 V VOS[1:0] = 01	Range 2, V_{CORE}=1.5 V VOS[1:0] = 10	Range 3, V_{CORE}=1.2 V VOS[1:0] = 11	Low-power sleep and run	
APB1	WWDG	2.5	2	1.6	2	µA/MHz (f_{HCLK})
	LPUART1	8.3	7.2	5.4	7.2	
	I2C1	11	8.2	6.8	8.9	
	LPTIM1	14	11	8.7	11	
	TIM2	10.5	8.5	6.4	8.5	
	USART2	8.5	6.8	5.4	7.1	
APB2	ADC1(2)	5.0	3.9	3.3	4	µA/MHz (f_{HCLK})
	SPI1	4.5	3.5	2.9	3.6	
	TIM21	6.8	6.1	4.5	5.6	
	DBGMCU	1.7	1.7	1.1	1.4	
	SYSCFG/ COMP	2.5	2.4	1.6	2.3	
Cortex-M0+ core I/O port	GPIOA	7.6	6.3	4.9	6.5	µA/MHz (f_{HCLK})
	GPIOB	5.1	4.1	3.2	4	
	GPIOC	1.1	0.7	0.6	0.8	
AHB	CRC	1.5	1.1	1	1.2	µA/MHz (f_{HCLK})
	FLASH(3)	10	8.5	7	8.5	
	AES	3.6	3.0	2.4	2.8	
	DMA1	5.3	4.2	3.5	4.8	
All enabled		96	80	62	88	
PWR		2.1	1.9	1.4	1.8	µA/MHz (f_{HCLK})

1. Data based on differential I_{DD} measurement between all peripherals OFF an one peripheral with clock enabled, in the following conditions: f_{HCLK} = 32 MHz (range 1), f_{HCLK} = 16 MHz (range 2), f_{HCLK} = 4 MHz (range 3), f_{HCLK} = 64kHz (Low-power run/sleep), $f_{APB1} = f_{HCLK}$, $f_{APB2} = f_{HCLK}$, default prescaler value for each peripheral. The CPU is in Sleep mode in both cases. No I/O pins toggling. Not tested in production.
2. HSI oscillator is OFF for this measure.
3. These values correspond to the Flash memory dynamic current consumption. The Flash memory static consumption (Flash memory ON) equals 12 µA and does not depend on the frequency.
The Flash memory consumption is already taken into account in all the supply current consumption tables (Flash memory ON cases).

Table 32. Peripheral current consumption in Stop and Standby mode

Symbol	Peripheral	Typical consumption, T_A = 25 °C		Unit
		V_{DD}=1.8 V	V_{DD}=3.0 V	
$I_{DD(PVD / BOR)}$	-	0.6	1	µA
I_{REFINT}	-	1.25	1.3	
-	LSE Low drive	0.11	0.16	
-	LPTIM1, Input 100 Hz	0.01	0.02	
-	LPTIM1, Input 1 MHz	8	9	
-	LPUART1	0.025	0.027	
-	RTC	0.1	0.19	

6.3.5 Wakeup time from low-power mode

The wakeup times given in the following table are measured with the MSI or HSI16 RC oscillator. The clock source used to wake up the device depends on the current operating mode:

- Sleep mode: the clock source is the clock that was set before entering Sleep mode
- Stop mode: the clock source is either the MSI oscillator in the range configured before entering Stop mode, the HSI16 or HSI16/4.
- Standby mode: the clock source is the MSI oscillator running at 2.1 MHz

All timings are derived from tests performed under ambient temperature and V_{DD} supply voltage conditions summarized in *Table 17*.

Table 33. Low-power mode wakeup timings

Symbol	Parameter	Conditions	Typ	Max	Unit
$t_{WUSLEEP}$	Wakeup from Sleep mode	f_{HCLK} = 32 MHz	7	8	CPU cycles
$t_{WUSLEEP_LP}$	Wakeup from Low-power sleep mode, f_{HCLK} = 262 kHz	f_{HCLK} = 262 kHz Flash enabled	7	8	
		f_{HCLK} = 262 kHz Flash switched OFF	9	10	

Table 33. Low-power mode wakeup timings (continued)

Symbol	Parameter	Conditions	Typ	Max	Unit
t_{WUSTOP}	Wakeup from Stop mode, regulator in Run mode	$f_{HCLK} = f_{MSI}$ = 4.2 MHz	5.1	8	µs
		$f_{HCLK} = f_{HSI}$ = 16 MHz	5.1	7	
		$f_{HCLK} = f_{HSI}/4$ = 4 MHz	8.1	11	
	Wakeup from Stop mode, regulator in low-power mode	$f_{HCLK} = f_{MSI}$ = 4.2 MHz Voltage range 1	5	8	
		$f_{HCLK} = f_{MSI}$ = 4.2 MHz Voltage range 2	5	8	
		$f_{HCLK} = f_{MSI}$ = 4.2 MHz Voltage range 3	5	8	
		$f_{HCLK} = f_{MSI}$ = 2.1 MHz	7.4	13	
		$f_{HCLK} = f_{MSI}$ = 1.05 MHz	14	23	
		$f_{HCLK} = f_{MSI}$ = 524 kHz	28	38	
		$f_{HCLK} = f_{MSI}$ = 262 kHz	51	65	
		$f_{HCLK} = f_{MSI}$ = 131 kHz	99	120	
		$f_{HCLK} = f_{MSI}$ = 65 kHz	196	260	
		$f_{HCLK} = f_{HSI}$ = 16 MHz	5.1	7	
		$f_{HCLK} = f_{HSI}/4$ = 4 MHz	8.2	11	
	Wakeup from Stop mode, regulator in low-power mode, HSI kept running in Stop mode	$f_{HCLK} = f_{HSI}$ = 16 MHz	3.25	-	
	Wakeup from Stop mode, regulator in low-power mode, code running from RAM	$f_{HCLK} = f_{HSI}$ = 16 MHz	4.9	7	
		$f_{HCLK} = f_{HSI}/4$ = 4 MHz	7.9	10	
		$f_{HCLK} = f_{MSI}$ = 4.2 MHz	4.8	8	
$t_{WUSTDBY}$	Wakeup from Standby mode FWU bit = 1	$f_{HCLK} = f_{MSI}$ = 2.1 MHz	65	130	
	Wakeup from Standby mode FWU bit = 0	$f_{HCLK} = f_{MSI}$ = 2.1 MHz	2.2	3	ms

6.3.6 External clock source characteristics

High-speed external user clock generated from an external source

In bypass mode the input pin is a standard GPIO.The external clock signal has to respect the I/O characteristics in *Section 6.3.12*. However, the recommended clock input waveform is shown in *Figure 18*.

Table 34. High-speed external user clock characteristics(1)

Symbol	Parameter	Conditions	Min	Typ	Max	Unit
f_{HSE_ext}	User external clock source frequency	CSS is ON or PLL is used	1	8	32	MHz
		CSS is OFF, PLL not used	0	8	32	MHz
V_{HSEH}	CK_IN input pin high level voltage	-	$0.7V_{DD}$	-	V_{DD}	V
V_{HSEL}	CK_IN input pin low level voltage		V_{SS}	-	$0.3V_{DD}$	
$t_{w(HSE)}$ $t_{w(HSE)}$	CK_IN high or low time		12	-	-	ns
$t_{r(HSE)}$ $t_{f(HSE)}$	CK_IN rise or fall time		-	-	20	
$C_{in(HSE)}$	CK_IN input capacitance		-	2.6	-	pF
$DuCy_{(HSE)}$	Duty cycle		45	-	55	%
I_L	CK_IN Input leakage current	$V_{SS} \le V_{IN} \le V_{DD}$	-	-	±1	µA

1. Guaranteed by design, not tested in production.

Figure 18. High-speed external clock source AC timing diagram

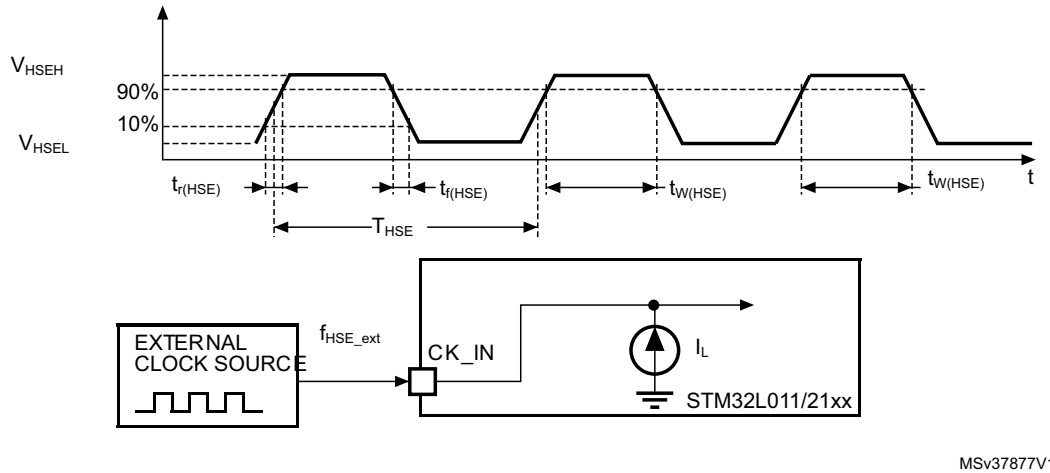

Low-speed external user clock generated from an external source

The characteristics given in the following table result from tests performed using a low-speed external clock source, and under ambient temperature and supply voltage conditions summarized in *Table 17*.

Table 35. Low-speed external user clock characteristics(1)

Symbol	Parameter	Conditions	Min	Typ	Max	Unit
f_{LSE_ext}	User external clock source frequency	-	-	32.768	1000	kHz
V_{LSEH}	OSC32_IN input pin high level voltage	-	$0.7V_{DD}$	-	V_{DD}	V
V_{LSEL}	OSC32_IN input pin low level voltage	-	V_{SS}	-	$0.3V_{DD}$	V
$t_{w(LSE)}$ $t_{w(LSE)}$	OSC32_IN high or low time	-	465	-	-	ns
$t_{r(LSE)}$ $t_{f(LSE)}$	OSC32_IN rise or fall time	-	-	-	10	ns
$C_{IN(LSE)}$	OSC32_IN input capacitance	-	-	0.6	-	pF
$DuCy_{(LSE)}$	Duty cycle	-	45	-	55	%
I_L	OSC32_IN Input leakage current	$V_{SS} \le V_{IN} \le V_{DD}$	-	-	±1	µA

1. Guaranteed by design, not tested in production

Figure 19. Low-speed external clock source AC timing diagram

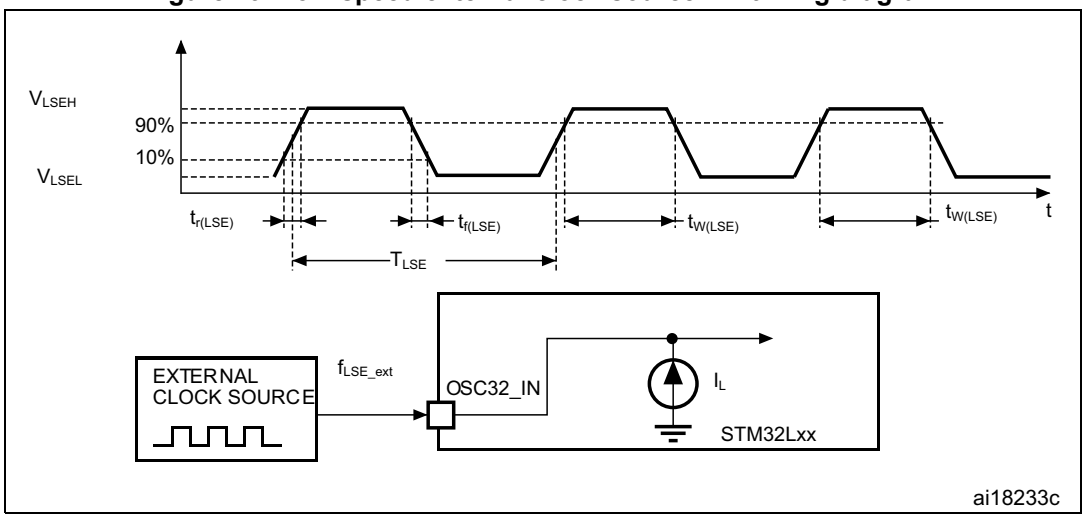

Low-speed external clock generated from a crystal/ceramic resonator

The low-speed external (LSE) clock can be supplied with a 32.768 kHz crystal/ceramic resonator oscillator. All the information given in this paragraph are based on characterization results obtained with typical external components specified in *Table 36*. In the application, the resonator and the load capacitors have to be placed as close as possible to the oscillator pins in order to minimize output distortion and startup stabilization

time. Refer to the crystal resonator manufacturer for more details on the resonator characteristics (frequency, package, accuracy).

Table 36. LSE oscillator characteristics(1)

Symbol	Parameter	Conditions(2)	Min(2)	Typ	Max	Unit
f_{LSE}	LSE oscillator frequency		-	32.768	-	kHz
G_m	Maximum critical crystal transconductance	LSEDRV[1:0]=00 lower driving capability	-	-	0.5	µA/V
		LSEDRV[1:0]= 01 medium low driving capability	-	-	0.75	
		LSEDRV[1:0] = 10 medium high driving capability	-	-	1.7	
		LSEDRV[1:0]=11 higher driving capability	-	-	2.7	
$t_{SU(LSE)}$(3)	Startup time	V_{DD} is stabilized	-	2	-	s

1. Guaranteed by design, not tested in production.
2. Refer to the note and caution paragraphs below the table, and to the application note AN2867 “Oscillator design guide for ST microcontrollers”.
3. Guaranteed by characterization results, not tested in production. $t_{SU(LSE)}$ is the startup time measured from the moment it is enabled (by software) to a stabilized 32.768 kHz oscillation is reached. This value is measured for a standard crystal resonator and it can vary significantly with the crystal manufacturer. To increase speed, address a lower-drive quartz with a high- driver mode.

Note: For information on selecting the crystal, refer to the application note AN2867 “Oscillator design guide for ST microcontrollers” available from the ST website http://www.st.com.

Figure 20. Typical application with a 32.768 kHz crystal

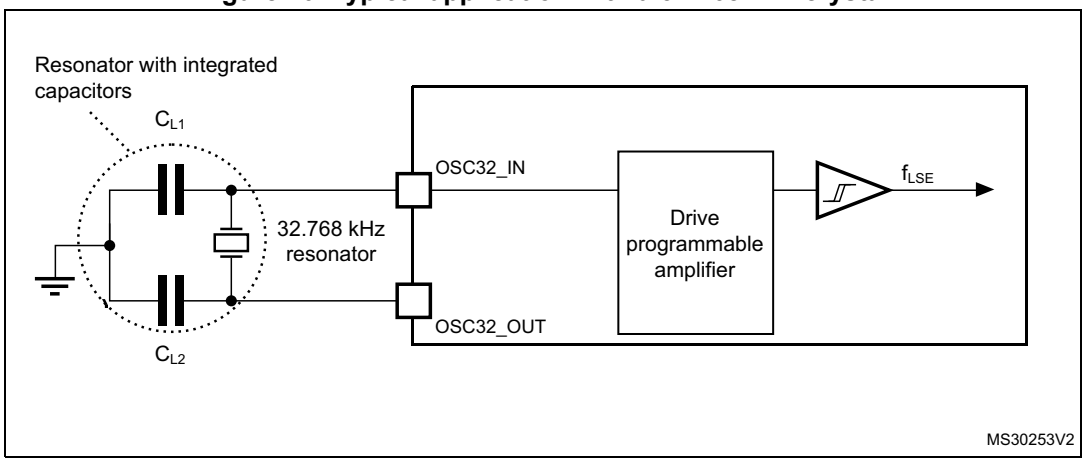

Note: An external resistor is not required between OSC32_IN and OSC32_OUT and it is forbidden to add one.

6.3.7 Internal clock source characteristics

The parameters given in *Table 37* are derived from tests performed under ambient temperature and V_{DD} supply voltage conditions summarized in *Table 17*.

High-speed internal 16 MHz (HSI16) RC oscillator

Table 37. 16 MHz HSI16 oscillator characteristics

Symbol	Parameter	Conditions	Min	Typ	Max	Unit
f_{HSI16}	Frequency	V_{DD} = 3.0 V	-	16	-	MHz
$TRIM^{(1)(2)}$	HSI16 user-trimmed resolution	Trimming code is not a multiple of 16	-	±0.4	0.7	%
		Trimming code is a multiple of 16	-	-	±1.5	%
$ACC_{HSI16}^{(2)}$	Accuracy of the factory-calibrated HSI16 oscillator	V_{DDA} = 3.0 V, T_A = 25 °C	-1(3)	-	1(3)	%
		V_{DDA} = 3.0 V, T_A = 0 to 55 °C	-1.5	-	1.5	%
		V_{DDA} = 3.0 V, T_A = -10 to 70 °C	-2	-	2	%
		V_{DDA} = 3.0 V, T_A = -10 to 85 °C	-2.5	-	2	%
		V_{DDA} = 3.0 V, T_A = -10 to 105 °C	-4	-	2	%
		V_{DDA} = 1.65 V to 3.6 V T_A = -40 to 125 °C	-5.45	-	3.25	%
$t_{SU(HSI16)}^{(2)}$	HSI16 oscillator startup time	-	-	3.7	6	µs
$I_{DD(HSI16)}^{(2)}$	HSI16 oscillator power consumption	-	-	100	140	µA

1. The trimming step differs depending on the trimming code. It is usually negative on the codes which are multiples of 16 (0x00, 0x10, 0x20, 0x30...0xE0).
2. Guaranteed by characterization results, not tested in production.
3. Guaranteed by test in production.

Figure 21. HSI16 minimum and maximum value versus temperature

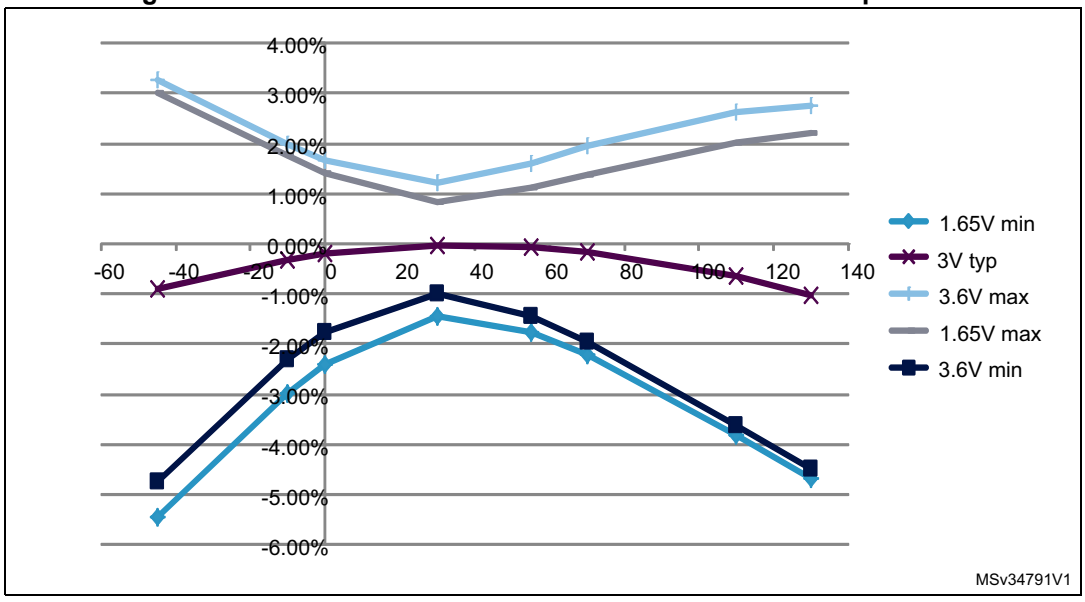

Low-speed internal (LSI) RC oscillator

Table 38. LSI oscillator characteristics

Symbol	Parameter	Min	Typ	Max	Unit
f_{LSI}(1)	LSI frequency	26	38	56	kHz
D_{LSI}(2)	LSI oscillator frequency drift 0°C ≤ T_A ≤ 85°C	-10	-	4	%
$t_{su(LSI)}$(3)	LSI oscillator startup time	-	-	200	µs
$I_{DD(LSI)}$(3)	LSI oscillator power consumption	-	400	510	nA

1. Guaranteed by test in production.
2. This is a deviation for an individual part, once the initial frequency has been measured.
3. Guaranteed by design, not tested in production.

Multi-speed internal (MSI) RC oscillator

Table 39. MSI oscillator characteristics

Symbol	Parameter	Condition	Typ	Max	Unit
f_{MSI}	Frequency after factory calibration, done at V_{DD}= 3.3 V and T_A = 25 °C	MSI range 0	65.5	-	kHz
		MSI range 1	131	-	
		MSI range 2	262	-	
		MSI range 3	524	-	
		MSI range 4	1.05	-	MHz
		MSI range 5	2.1	-	
		MSI range 6	4.2	-	
ACC_{MSI}	Frequency error after factory calibration	-	±0.5	-	%
$D_{TEMP(MSI)}$(1)	MSI oscillator frequency drift 0 °C ≤ T_A ≤ 85 °C	-	±3	-	%
$D_{VOLT(MSI)}$(1)	MSI oscillator frequency drift 1.65 V ≤ V_{DD} ≤ 3.6 V, T_A = 25 °C	-	-	2.5	%/V
$I_{DD(MSI)}$(2)	MSI oscillator power consumption	MSI range 0	0.75	-	µA
		MSI range 1	1	-	
		MSI range 2	1.5	-	
		MSI range 3	2.5	-	
		MSI range 4	4.5	-	
		MSI range 5	8	-	
		MSI range 6	15	-	

Table 39. MSI oscillator characteristics (continued)

Symbol	Parameter	Condition	Typ	Max	Unit
$t_{SU(MSI)}$	MSI oscillator startup time	MSI range 0	30	-	µs
		MSI range 1	20	-	
		MSI range 2	15	-	
		MSI range 3	10	-	
		MSI range 4	6	-	
		MSI range 5	5	-	
		MSI range 6, Voltage range 1 and 2	3.5	-	
		MSI range 6, Voltage range 3	5	-	
$t_{STAB(MSI)}$(2)	MSI oscillator stabilization time	MSI range 0	-	40	µs
		MSI range 1	-	20	
		MSI range 2	-	10	
		MSI range 3	-	4	
		MSI range 4	-	2.5	
		MSI range 5	-	2	
		MSI range 6, Voltage range 1 and 2	-	2	
		MSI range 3, Voltage range 3	-	3	
$f_{OVER(MSI)}$	MSI oscillator frequency overshoot	Any range to range 5	-	4	MHz
		Any range to range 6	-	6	

1. This is a deviation for an individual part, once the initial frequency has been measured.
2. Guaranteed by characterization results, not tested in production.

6.3.8 PLL characteristics

The parameters given in *Table 40* are derived from tests performed under ambient temperature and V_{DD} supply voltage conditions summarized in *Table 17*.

Table 40. PLL characteristics

Symbol	Parameter	Value			Unit
		Min	Typ	Max(1)	
f_{PLL_IN}	PLL input clock(2)	2	-	24	MHz
	PLL input clock duty cycle	45	-	55	%

Table 40. PLL characteristics (continued)

Symbol	Parameter	Value			Unit
		Min	Typ	Max(1)	
f_{PLL_OUT}	PLL output clock	2	-	32	MHz
t_{LOCK}	PLL input = 16 MHz PLL VCO = 96 MHz	-	115	160	µs
Jitter	Cycle-to-cycle jitter	-		±600	ps
I_{DDA}(PLL)	Current consumption on V_{DDA}	-	220	450	µA
I_{DD}(PLL)	Current consumption on V_{DD}	-	120	150	

1. Guaranteed by characterization results, not tested in production.
2. Take care of using the appropriate multiplier factors so as to have PLL input clock values compatible with the range defined by f_{PLL_OUT}.

6.3.9 Memory characteristics

RAM memory

Table 41. RAM and hardware registers

Symbol	Parameter	Conditions	Min	Typ	Max	Unit
VRM	Data retention mode(1)	STOP mode (or RESET)	1.65	-	-	V

1. Minimum supply voltage without losing data stored in RAM (in Stop mode or under Reset) or in hardware registers (only in Stop mode).

Flash memory and data EEPROM

Table 42. Flash memory and data EEPROM characteristics

Symbol	Parameter	Conditions	Min	Typ	Max(1)	Unit
V_{DD}	Operating voltage Read / Write / Erase	-	1.65	-	3.6	V
t_{prog}	Programming time for word or half-page	Erasing	-	3.28	3.94	ms
		Programming	-	3.28	3.94	
I_{DD}	Average current during the whole programming / erase operation	T_A = 25 °C, V_{DD} = 3.6 V	-	500	700	µA
	Maximum current (peak) during the whole programming / erase operation		-	1.5	2.5	mA

1. Guaranteed by design, not tested in production.

Table 43. Flash memory and data EEPROM endurance and retention

Symbol	Parameter	Conditions	Value	Unit
			Min(1)	
N_{CYC}(2)	Cycling (erase / write) Program memory	T_A = -40°C to 105 °C	10	kcycles
	Cycling (erase / write) EEPROM data memory		100	
	Cycling (erase / write) Program memory	T_A = -40°C to 125 °C	0.2	
	Cycling (erase / write) EEPROM data memory		2	
t_{RET}(2)	Data retention (program memory) after 10 kcycles at T_A = 85 °C	T_{RET} = +85 °C	30	years
	Data retention (EEPROM data memory) after 100 kcycles at T_A = 85 °C		30	
	Data retention (program memory) after 10 kcycles at T_A = 105 °C	T_{RET} = +105 °C	10	
	Data retention (EEPROM data memory) after 100 kcycles at T_A = 105 °C			
	Data retention (program memory) after 200 cycles at T_A = 125 °C	T_{RET} = +125 °C		
	Data retention (EEPROM data memory) after 2 kcycles at T_A = 125 °C			

1. Guaranteed by characterization results, not tested in production.
2. Characterization is done according to JEDEC JESD22-A117.

6.3.10 EMC characteristics

Susceptibility tests are performed on a sample basis during device characterization.

Functional EMS (electromagnetic susceptibility)

While a simple application is executed on the device (toggling 2 LEDs through I/O ports). the device is stressed by two electromagnetic events until a failure occurs. The failure is indicated by the LEDs:

- **Electrostatic discharge (ESD)** (positive and negative) is applied to all device pins until a functional disturbance occurs. This test is compliant with the IEC 61000-4-2 standard.
- **FTB**: A Burst of Fast Transient voltage (positive and negative) is applied to V_{DD} and V_{SS} through a 100 pF capacitor, until a functional disturbance occurs. This test is compliant with the IEC 61000-4-4 standard.

A device reset allows normal operations to be resumed.

The test results are given in *Table 44*. They are based on the EMS levels and classes defined in application note AN1709.

Table 44. EMS characteristics

Symbol	Parameter	Conditions	Level/ Class
V_{FESD}	Voltage limits to be applied on any I/O pin to induce a functional disturbance	V_{DD} = 3.3 V, LQFP32, T_A = +25 °C, f_{HCLK} = 32 MHz conforms to IEC 61000-4-2	3B
V_{EFTB}	Fast transient voltage burst limits to be applied through 100 pF on V_{DD} and V_{SS} pins to induce a functional disturbance	V_{DD} = 3.3 V, LQFP32, T_A = +25 °C, f_{HCLK} = 32 MHz conforms to IEC 61000-4-4	4A

Designing hardened software to avoid noise problems

EMC characterization and optimization are performed at component level with a typical application environment and simplified MCU software. It should be noted that good EMC performance is highly dependent on the user application and the software in particular.

Therefore it is recommended that the user applies EMC software optimization and prequalification tests in relation with the EMC level requested for his application.

Software recommendations

The software flowchart must include the management of runaway conditions such as:

- Corrupted program counter
- Unexpected reset
- Critical data corruption (control registers...)

Prequalification trials

Most of the common failures (unexpected reset and program counter corruption) can be reproduced by manually forcing a low state on the NRST pin or the oscillator pins for 1 second.

To complete these trials, ESD stress can be applied directly on the device, over the range of specification values. When unexpected behavior is detected, the software can be hardened to prevent unrecoverable errors occurring (see application note AN1015).

Electromagnetic Interference (EMI)

The electromagnetic field emitted by the device are monitored while a simple application is executed (toggling 2 LEDs through the I/O ports). This emission test is compliant with IEC 61967-2 standard which specifies the test board and the pin loading.

Table 45. EMI characteristics

Symbol	Parameter	Conditions	Monitored frequency band	Max vs. frequency range (32 MHz voltage Range 1)	Unit
S_{EMI}	Peak level	V_{DD} = 3.3 V, T_A = 25 °C, LQFP32 package compliant with IEC 61967-2	0.1 to 30 MHz	-22	dBµV
			30 to 130 MHz	-7	
			130 MHz to 1GHz	-12	
			SAE EMI Level	1	-

6.3.11 Electrical sensitivity characteristics

Based on three different tests (ESD, LU) using specific measurement methods, the device is stressed in order to determine its performance in terms of electrical sensitivity.

Electrostatic discharge (ESD)

Electrostatic discharges (a positive then a negative pulse separated by 1 second) are applied to the pins of each sample according to each pin combination. The sample size depends on the number of supply pins in the device (3 parts × (n+1) supply pins). This test conforms to the ANSI/JEDEC standard.

Table 46. ESD absolute maximum ratings

Symbol	Ratings	Conditions	Class	Maximum value(1)	Unit
$V_{ESD(HBM)}$	Electrostatic discharge voltage (human body model)	T_A = +25 °C, conforming to ANSI/JEDEC JS-001	2	2000	V
$V_{ESD(CDM)}$	Electrostatic discharge voltage (charge device model)	T_A = +25 °C, conforming to ANSI/ESD STM5.3.1.	C4	500	

1. Guaranteed by characterization results, not tested in production.

Static latch-up

Two complementary static tests are required on six parts to assess the latch-up performance:

- A supply overvoltage is applied to each power supply pin
- A current injection is applied to each input, output and configurable I/O pin

These tests are compliant with EIA/JESD 78A IC latch-up standard.

Table 47. Electrical sensitivities

Symbol	Parameter	Conditions	Class
LU	Static latch-up class	T_A = +125 °C conforming to JESD78A	II level A

6.3.12 I/O current injection characteristics

As a general rule, current injection to the I/O pins, due to external voltage below V_{SS} or above V_{DD} (for standard pins) should be avoided during normal product operation. However, in order to give an indication of the robustness of the microcontroller in cases when abnormal injection accidentally happens, susceptibility tests are performed on a sample basis during device characterization.

Functional susceptibility to I/O current injection

While a simple application is executed on the device, the device is stressed by injecting current into the I/O pins programmed in floating input mode. While current is injected into the I/O pin, one at a time, the device is checked for functional failures.

The failure is indicated by an out of range parameter: ADC error above a certain limit (higher than 5 LSB TUE), out of conventional limits of induced leakage current on adjacent pins (out of –5 µA/+0 µA range), or other functional failure (for example reset occurrence oscillator frequency deviation).

The test results are given in the *Table 48*.

Table 48. I/O current injection susceptibility

Symbol	Description	Functional susceptibility		Unit
		Negative injection	Positive injection	
I_{INJ}	Injected current on BOOT0	-0	NA(1)	mA
	Injected current on all FT pins	-5 (2)	NA(1)	
	Injected current on any other pin	-5 (2)	+5	

1. Current injection is not possible.
2. It is recommended to add a Schottky diode (pin to ground) to analog pins which may potentially inject negative currents.

6.3.13 I/O port characteristics

General input/output characteristics

Unless otherwise specified, the parameters given in *Table 49* are derived from tests performed under the conditions summarized in *Table 17*. All I/Os are CMOS and TTL compliant.

Table 49. I/O static characteristics

Symbol	Parameter	Conditions	Min	Typ	Max	Unit
V_{IL}	Input low level voltage	TC, FT, FTf, RST I/Os	-	-	$0.3V_{DD}$	V
		BOOT0 pin	-	-	$0.14V_{DD}$(1)	
V_{IH}	Input high level voltage	All I/Os except BOOT0 pin	$0.7\ V_{DD}$	-	-	
		BOOT0 pin	$0.15\ V_{DD}+0.56$(1)	-	-	
V_{hys}	I/O Schmitt trigger voltage hysteresis (2)	Standard I/Os	-	$10\%\ V_{DD}$(3)	-	
		BOOT0 pin	-	0.01	-	
I_{lkg}	Input leakage current (4)	$V_{SS} \le V_{IN} \le V_{DD}$ All I/Os except BOOT0 and FTf I/Os	-	-	±50	nA
		BOOT0(5) $V_{IN} = V_{DD}$	-	+2	-	µA
		BOOT0 $V_{IN} = V_{SS}$	-	0	-	
		$V_{DD} \le V_{IN} \le 5$ V FT I/Os	-	-	200	nA
		$V_{DD} \le V_{IN} \le 5$ V FTf I/Os	-	-	500	
		$V_{DD} \le V_{IN} \le 5$ V BOOT0	-	-	10	µA
R_{PU}	Weak pull-up equivalent resistor(6)	$V_{IN} = V_{SS}$	25	45	65	kΩ
R_{PD}	Weak pull-down equivalent resistor(6)	$V_{IN} = V_{DD}$	25	45	65	kΩ
C_{IO}	I/O pin capacitance	-	-	5	-	pF

1. Guaranteed by characterization, not tested in production
2. Hysteresis voltage between Schmitt trigger switching levels. Guaranteed by characterization results, not tested in production.
3. With a minimum of 200 mV. Guaranteed by characterization results, not tested in production.
4. The max. value may be exceeded if negative current is injected on adjacent pins.
5. BOOT0/PB9 pin limitation: typical input leakage current = 2 µA and input frequency limited to 10 kHz (1.65 V < V_{DD} < 2.7 V) and 5 MHz (2.7 V < V_{DD} < 3.6 V).
6. Pull-up and pull-down resistors are designed with a true resistance in series with a switchable PMOS/NMOS. This MOS/NMOS contribution to the series resistance is minimum (~10% order).

Figure 22. V_{IH}/V_{IL} versus VDD (CMOS I/Os)

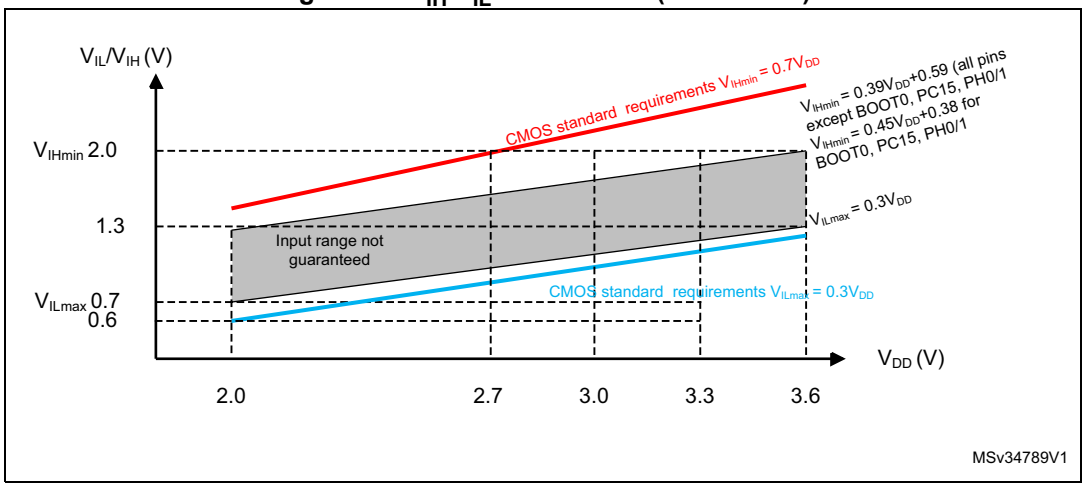

Figure 23. V_{IH}/V_{IL} versus VDD (TTL I/Os)

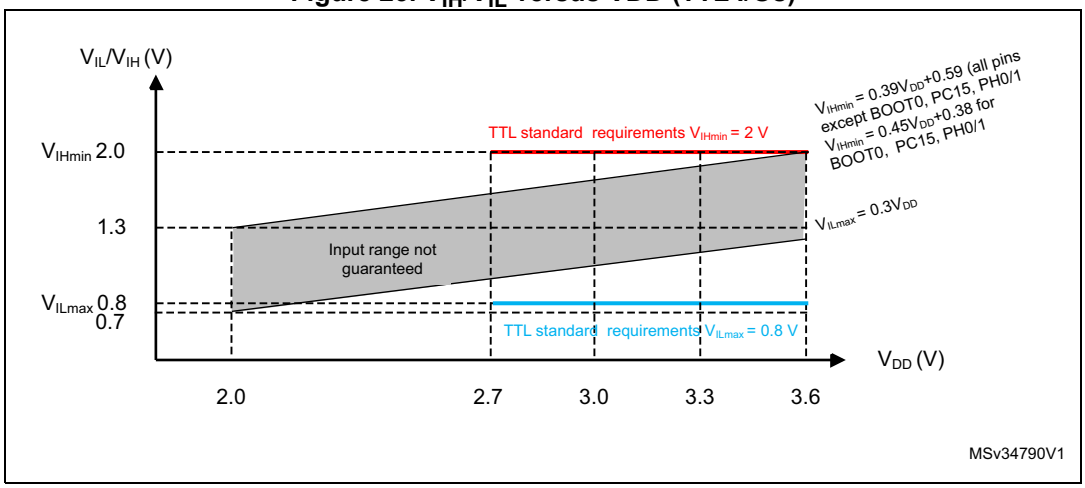

Output driving current

The GPIOs (general purpose input/outputs) can sink or source up to ±8 mA, and sink or source up to ±15 mA with the non-standard V_{OL}/V_{OH} specifications given in *Table 50*.

In the user application, the number of I/O pins which can drive current must be limited to respect the absolute maximum rating specified in *Section 6.2*:

- The sum of the currents sourced by all the I/Os on $V_{DD,}$ plus the maximum Run consumption of the MCU sourced on $V_{DD,}$ cannot exceed the absolute maximum rating $I_{VDD(\Sigma)}$ (see *Table 15*).
- The sum of the currents sunk by all the I/Os on V_{SS} plus the maximum Run consumption of the MCU sunk on V_{SS} cannot exceed the absolute maximum rating $I_{VSS(\Sigma)}$ (see *Table 15*).

Output voltage levels

Unless otherwise specified, the parameters given in *Table 50* are derived from tests performed under ambient temperature and V_{DD} supply voltage conditions summarized in *Table 17*. All I/Os are CMOS and TTL compliant.

Table 50. Output voltage characteristics

Symbol	Parameter	Conditions	Min	Max	Unit
V_{OL} (1)	Output low level voltage for an I/O pin	CMOS port(2), I_{IO} = +8 mA 2.7 V ≤ V_{DD} ≤ 3.6 V	-	0.4	V
V_{OH} (3)	Output high level voltage for an I/O pin		V_{DD}-0.4	-	
V_{OL} (1)	Output low level voltage for an I/O pin	TTL port(2), I_{IO} =+ 8 mA 2.7 V ≤ V_{DD} ≤ 3.6 V	-	0.4	
V_{OH} (3)(4)	Output high level voltage for an I/O pin	TTL port(2), I_{IO} = -6 mA 2.7 V ≤ V_{DD} ≤ 3.6 V	2.4	-	
V_{OL} (1)(4)	Output low level voltage for an I/O pin	I_{IO} = +15 mA 2.7 V ≤ V_{DD} ≤ 3.6 V	-	1.3	
V_{OH} (3)(4)	Output high level voltage for an I/O pin	I_{IO} = -15 mA 2.7 V ≤ V_{DD} ≤ 3.6 V	V_{DD}-1.3	-	
V_{OL} (1)(4)	Output low level voltage for an I/O pin	I_{IO} = +4 mA 1.65 V ≤ V_{DD} < 3.6 V	-	0.45	
V_{OH} (3)(4)	Output high level voltage for an I/O pin	I_{IO} = -4 mA 1.65 V ≤ V_{DD} ≤ 3.6 V	V_{DD}-0.45	-	
V_{OLFM+} (1)(4)	Output low level voltage for an FTf I/O pin in Fm+ mode	I_{IO} = 20 mA 2.7 V ≤ V_{DD} ≤ 3.6 V	-	0.4	
		I_{IO} = 10 mA 1.65 V ≤ V_{DD} ≤ 3.6 V	-	0.4	

1. The I_{IO} current sunk by the device must always respect the absolute maximum rating specified in *Table 15*. The sum of the currents sunk by all the I/Os (I/O ports and control pins) must always be respected and must not exceed $\Sigma I_{IO(PIN)}$.
2. TTL and CMOS outputs are compatible with JEDEC standards JESD36 and JESD52.
3. The I_{IO} current sourced by the device must always respect the absolute maximum rating specified in *Table 15*. The sum of the currents sourced by all the I/Os (I/O ports and control pins) must always be respected and must not exceed $\Sigma I_{IO(PIN)}$.
4. Guaranteed by characterization results, not tested in production.

Input/output AC characteristics

The definition and values of input/output AC characteristics are given in *Figure 24* and *Table 51*, respectively.

Unless otherwise specified, the parameters given in *Table 51* are derived from tests performed under ambient temperature and V_{DD} supply voltage conditions summarized in *Table 17*.

Table 51. I/O AC characteristics(1)(2)

OSPEEDRx [1:0] bit value(1)	Symbol	Parameter	Conditions	Min	Max(3)	Unit
00	$f_{max(IO)out}$	Maximum frequency(4)	C_L = 50 pF, V_{DD} = 2.7 V to 3.6 V	-	400	kHz
			C_L = 50 pF, V_{DD} = 1.65 V to 2.7 V	-	100	
	$t_{f(IO)out}$ $t_{r(IO)out}$	Output rise and fall time	C_L = 50 pF, V_{DD} = 2.7 V to 3.6 V	-	125	ns
			C_L = 50 pF, V_{DD} = 1.65 V to 2.7 V	-	320	
01	$f_{max(IO)out}$	Maximum frequency(4)	C_L = 50 pF, V_{DD} = 2.7 V to 3.6 V	-	2	MHz
			C_L = 50 pF, V_{DD} = 1.65 V to 2.7 V	-	0.6	
	$t_{f(IO)out}$ $t_{r(IO)out}$	Output rise and fall time	C_L = 50 pF, V_{DD} = 2.7 V to 3.6 V	-	30	ns
			C_L = 50 pF, V_{DD} = 1.65 V to 2.7 V	-	65	
10	$F_{max(IO)out}$	Maximum frequency(4)	C_L = 50 pF, V_{DD} = 2.7 V to 3.6 V	-	10	MHz
			C_L = 50 pF, V_{DD} = 1.65 V to 2.7 V	-	2	
	$t_{f(IO)out}$ $t_{r(IO)out}$	Output rise and fall time	C_L = 50 pF, V_{DD} = 2.7 V to 3.6 V	-	13	ns
			C_L = 50 pF, V_{DD} = 1.65 V to 2.7 V	-	28	
11	$F_{max(IO)out}$	Maximum frequency(4)	C_L = 30 pF, V_{DD} = 2.7 V to 3.6 V	-	35	MHz
			C_L = 50 pF, V_{DD} = 1.65 V to 2.7 V	-	10	
	$t_{f(IO)out}$ $t_{r(IO)out}$	Output rise and fall time	C_L = 30 pF, V_{DD} = 2.7 V to 3.6 V	-	6	ns
			C_L = 50 pF, V_{DD} = 1.65 V to 2.7 V	-	17	
-	t_{EXTIpw}	Pulse width of external signals detected by the EXTI controller	-	8	-	ns

1. The I/O speed is configured using the OSPEEDRx[1:0] bits. Refer to the line reference manual for a description of GPIO Port configuration register.
2. BOOT0/PB9 maximum input frequency is 10 kHz (1.65 V < V_{DD} < 2.7 V) and 5 MHz (2.7 V < V_{DD} < 3.6 V).
3. Guaranteed by design. Not tested in production.
4. The maximum frequency is defined in *Figure 24*.

Figure 24. I/O AC characteristics definition

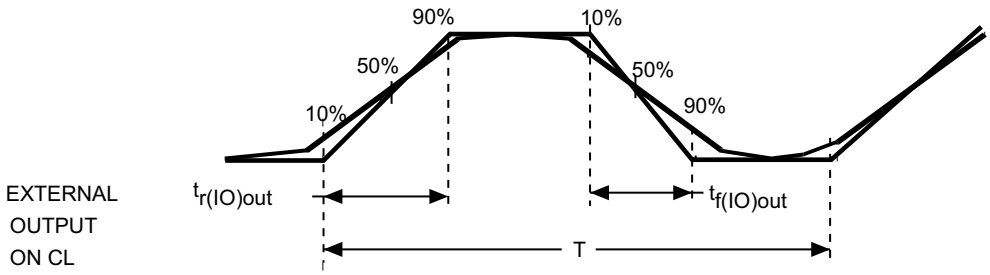

Maximum frequency is achieved if (t_r + t_f) ≤ (2/3)T and if the duty cycle is (45-55%) when loaded by CL specified in the table " *I/O AC characteristics*".

ai14131d

6.3.14 NRST pin characteristics

The NRST pin input driver uses CMOS technology. It is connected to a permanent pull-up resistor, R_{PU} , except when it is internally driven low (see *Table 52*).

Unless otherwise specified, the parameters given in *Table 52* are derived from tests performed under ambient temperature and V_{DD} supply voltage conditions summarized in *Table 17*.

Table 52. NRST pin characteristics

Symbol	Parameter	Conditions	Min	Typ	Max	Unit
$V_{IL(NRST)}$(1)	NRST input low level voltage	-	-	-	$0.3V_{DD}$	V
$V_{IH(NRST)}$(1)	NRST input high level voltage	-	$0.39V_{DD}$+ 0.59	-	-	
$V_{OL(NRST)}$(1)	NRST output low level voltage	I_{OL} = 2 mA 2.7 V < V_{DD} < 3.6 V	-	-	0.4	
		I_{OL} = 1.5 mA 1.65 V < V_{DD} < 2.7 V	-	-		
$V_{hys(NRST)}$(1)	NRST Schmitt trigger voltage hysteresis	-	-	$10\%V_{DD}$(2)	-	mV
R_{PU}	Weak pull-up equivalent resistor(3)	V_{IN} = V_{SS}	25	45	65	kΩ
$V_{F(NRST)}$(1)	NRST input filtered pulse	-	-	-	50	ns
$V_{NF(NRST)}$(1)	NRST input not filtered pulse	-	350	-	-	ns

1. Guaranteed by design, not tested in production.
2. 200 mV minimum value
3. The pull-up is designed with a true resistance in series with a switchable PMOS. This PMOS contribution to the series resistance is around 10%.

Figure 25. Recommended NRST pin protection

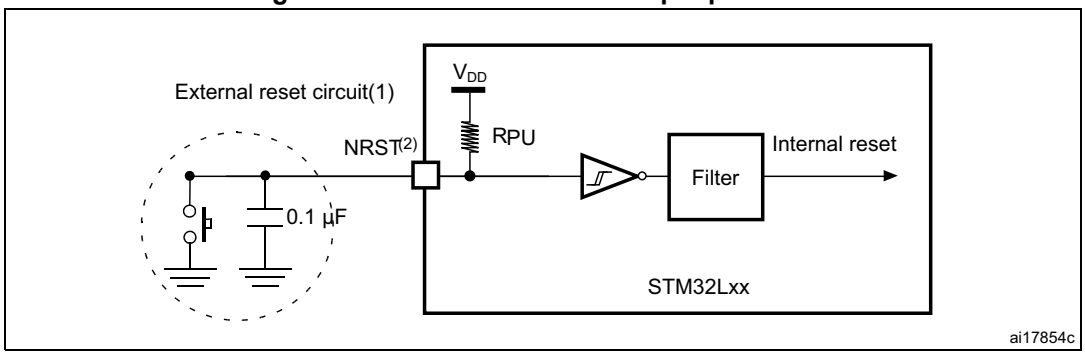

1. The reset network protects the device against parasitic resets.
2. The external capacitor must be placed as close as possible to the device.
3. The user must ensure that the level on the NRST pin can go below the $V_{IL(NRST)}$ max level specified in *Table 52*. Otherwise the reset will not be taken into account by the device.

6.3.15 12-bit ADC characteristics

Unless otherwise specified, the parameters given in *Table 53* are values derived from tests performed under ambient temperature, f_{PCLK} frequency and V_{DDA} supply voltage conditions summarized in *Table 17: General operating conditions*.

Note: It is recommended to perform a calibration after each power-up.

Table 53. ADC characteristics

Symbol	Parameter	Conditions	Min	Typ	Max	Unit
V_{DDA}	Analog supply voltage for ADC ON	Fast channel	1.65	-	3.6	V
		Standard channels	1.75(1)	-	3.6	
$I_{DDA\ (ADC)}$	Current consumption of the ADC on V_{DDA}	1.14 Msps	-	200	-	µA
		10 ksps	-	40	-	
	Current consumption of the ADC on V_{DD}(2)	1.14 Msps	-	70	-	
		10 ksps	-	1	-	
f_{ADC}	ADC clock frequency	Voltage scaling Range 1	0.14	-	16	MHz
		Voltage scaling Range 2	0.14	-	8	
		Voltage scaling Range 3	0.14	-	4	
f_S(3)	Sampling rate	-	0.05	-	1.14	MHz
f_{TRIG}(3)	External trigger frequency	f_{ADC} = 16 MHz, 16-bit resolution	-	-	941	kHz
		-	-	-	17	$1/f_{ADC}$
V_{AIN}	Conversion voltage range	-	0	-	V_{DDA}	V
R_{AIN}(3)	External input impedance	See *Equation 1* and *Table 54* for details	-	-	50	kΩ
R_{ADC}(3)(4)	Sampling switch resistance	-	-	-	1	kΩ

Table 53. ADC characteristics (continued)

Symbol	Parameter	Conditions	Min	Typ	Max	Unit
C_{ADC}(3)	Internal sample and hold capacitor	-	-	-	8	pF
t_{CAL}(3)	Calibration time	f_{ADC} = 16 MHz	5.2			µs
		-	83			$1/f_{ADC}$
$W_{LATENCY}$	ADC_DR register write latency	ADC clock = HSI16	1.5 ADC cycles + 2 f_{PCLK} cycles	-	1.5 ADC cycles + 3 f_{PCLK} cycles	-
		ADC clock = PCLK/2	-	4.5	-	f_{PCLK} cycle
		ADC clock = PCLK/4	-	8.5	-	f_{PCLK} cycle
t_{latr}(3)	Trigger conversion latency	$f_{ADC} = f_{PCLK}/2$ = 16 MHz	0.266			µs
		$f_{ADC} = f_{PCLK}/2$	8.5			$1/f_{PCLK}$
		$f_{ADC} = f_{PCLK}/4$ = 8 MHz	0.516			µs
		$f_{ADC} = f_{PCLK}/4$	16.5			$1/f_{PCLK}$
		$f_{ADC} = f_{HSI16}$ = 16 MHz	0.252	-	0.260	µs
$Jitter_{ADC}$	ADC jitter on trigger conversion	$f_{ADC} = f_{HSI16}$	-	1	-	$1/f_{HSI16}$
t_S(3)	Sampling time	f_{ADC} = 16 MHz	0.093	-	10.03	µs
		-	1.5	-	239.5	$1/f_{ADC}$
t_{STAB}(3)	Power-up time	-	0	0	1	µs
t_{ConV}(3)	Total conversion time (including sampling time)	f_{ADC} = 16 MHz	0.875		10.81	µs
		-	14 to 173 (t_S for sampling +12.5 for successive approximation)			$1/f_{ADC}$

1. V_{DDA} minimum value can be decreased in specific temperature conditions. Refer to *Table 54: RAIN max for fADC = 16 MHz*.
2. A current consumption proportional to the APB clock frequency has to be added (see *Table 31: Peripheral current consumption in run or Sleep mode*).
3. Guaranteed by design, not tested in production.
4. Standard channels have an extra protection resistance which depends on supply voltage. Refer to *Table 54: RAIN max for fADC = 16 MHz*.

Equation 1: R_{AIN} max formula

$$R_{AIN} < \frac{T_S}{f_{ADC} \times C_{ADC} \times \ln(2^{N+2})} - R_{ADC}$$

The simplified formula above (*Equation 1*) is used to determine the maximum external impedance allowed for an error below 1/4 of LSB. Here N = 12 (from 12-bit resolution).

Table 54. R_{AIN} max for f_{ADC} = 16 MHz(1)

T_s (cycles)	t_S (µs)	R_{AIN} max for fast channels (kΩ)	R_{AIN} max for standard channels (kΩ)						
			V_{DD} > 2.7 V	V_{DD} > 2.4 V	V_{DD} > 2.0 V	V_{DD} > 1.8 V	V_{DD} > 1.75 V	V_{DD} > 1.65 V and T_A > -10 °C	V_{DD} > 1.65 V and T_A > 25 °C
1.5	0.09	0.5	< 0.1	NA	NA	NA	NA	NA	NA
3.5	0.22	1	0.2	< 0.1	NA	NA	NA	NA	NA
7.5	0.47	2.5	1.7	1.5	< 0.1	NA	NA	NA	NA
12.5	0.78	4	3.2	3	1	NA	NA	NA	NA
19.5	1.22	6.5	5.7	5.5	3.5	NA	NA	NA	< 0.1
39.5	2.47	13	12.2	12	10	NA	NA	NA	5
79.5	4.97	27	26.2	26	24	< 0.1	NA	NA	19
160.5	10.03	50	49.2	49	47	32	< 0.1	< 0.1	42

1. Guaranteed by design.

Table 55. ADC accuracy(1)(2)(3)(4)

Symbol	Parameter	Conditions	Min	Typ	Max	Unit
ET	Total unadjusted error	1.65 V < V_{DDA} < 3.6 V, range 1/2/3, except for TSSOP14 package	-	2	4	LSB
EO	Offset error		-	1	2.5	
EG	Gain error		-	1	2	
EL	Integral linearity error		-	1.5	2.5	
ED	Differential linearity error		-	1	1.5	
ENOB	Effective number of bits		10.2	11		bits
	Effective number of bits (16-bit mode oversampling with ratio =256)(5)		11.3	12.1	-	
SINAD	Signal-to-noise distortion		62	67.8	-	dB
SNR	Signal-to-noise ratio		63	68	-	
	Signal-to-noise ratio (16-bit mode oversampling with ratio =256)(5)		70	76	-	
THD	Total harmonic distortion		-	-81	-68.5	

Table 55. ADC accuracy(1)(2)(3)(4)

Symbol	Parameter	Conditions	Min	Typ	Max	Unit
ET	Total unadjusted error	1.65 V < V_{DDA} < 3.6 V, range 1/2/3, TSSOP14 package	-	3	5	LSB
EO	Offset error		-	2	2.5	
EG	Gain error		-	2	2.5	
EL	Integral linearity error		-	1.5	2.5	
ED	Differential linearity error		-	1	1.7	
ENOB	Effective number of bits		9.5	10.5	-	bits
	Effective number of bits (16-bit mode oversampling with ratio =256)(5)		10.7	11.6	-	
SINAD	Signal-to-noise distortion		59	65	-	dB
SNR	Signal-to-noise ratio		59	65	-	
	Signal-to-noise ratio (16-bit mode oversampling with ratio =256)(5)		66	73	-	
THD	Total harmonic distortion		-	-75	-63	

1. ADC DC accuracy values are measured after internal calibration.
2. ADC Accuracy vs. Negative Injection Current: Injecting negative current on any of the standard (non-robust) analog input pins should be avoided as this significantly reduces the accuracy of the conversion being performed on another analog input. It is recommended to add a Schottky diode (pin to ground) to standard analog pins which may potentially inject negative current.
   Any positive injection current within the limits specified for $I_{INJ(PIN)}$ and $\Sigma I_{INJ(PIN)}$ in *Section 6.3.12* does not affect the ADC accuracy.
3. Better performance may be achieved in restricted V_{DDA}, frequency and temperature ranges.
4. In TSSOP14 package, where V_{DDA} pin is shared with V_{DD} pin, I/O toggling should be minimized to reach the values given in the above table. I/O toggling with loaded I/O pins can generate ripple on V_{DD}/V_{DDA} and degrade the ADC accuracy.
5. This number is obtained by the test board without additional noise, resulting in non-optimized value for oversampling mode.

Figure 26. ADC accuracy characteristics

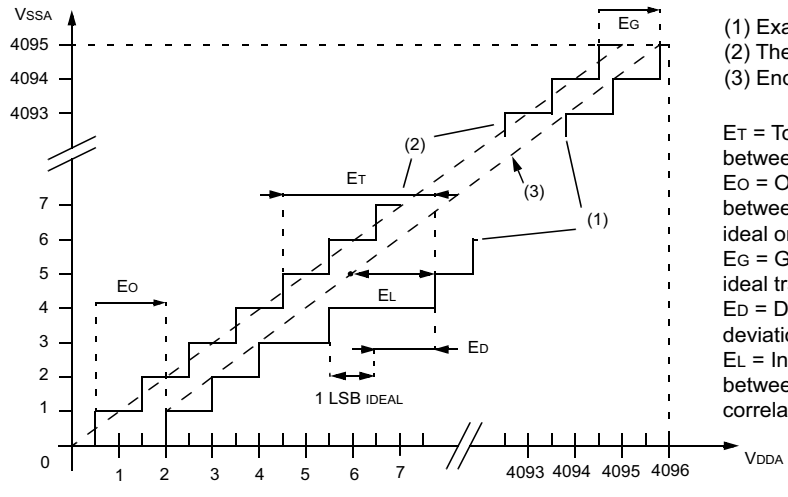

(1) Example of an actual transfer curve
(2) The ideal transfer curve
(3) End point correlation line

E_T = Total Unajusted Error: maximum deviation between the actual and ideal transfer curves.
E_O = Offset Error: maximum deviation between the first actual transition and the first ideal one.
E_G = Gain Error: deviation between the last ideal transition and the last actual one.
E_D = Differential Linearity Error: maximum deviation between actual steps and the ideal ones.
E_L = Integral Linearity Error: maximum deviation between any actual transition and the end point correlation line.

MS19880V2

Figure 27. Typical connection diagram using the ADC

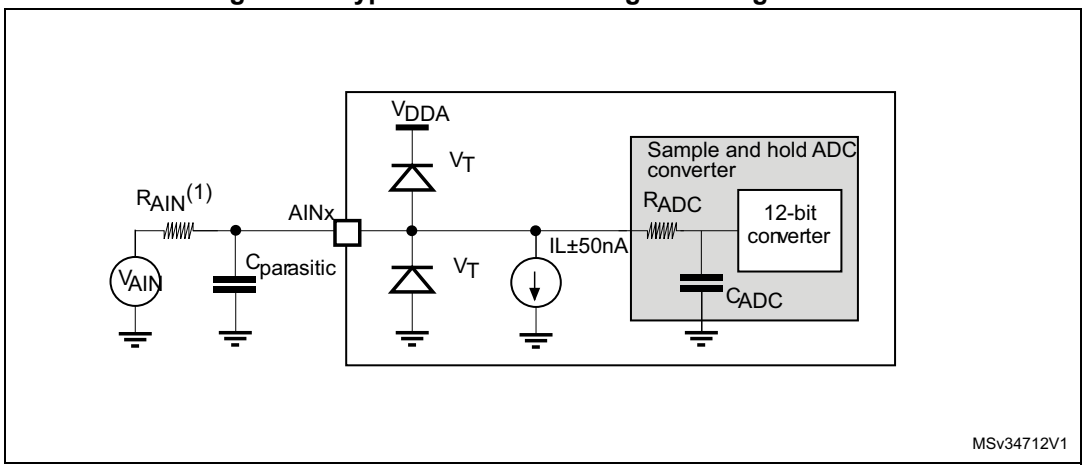

1. Refer to *Table 53: ADC characteristics* for the values of R_{AIN}, R_{ADC} and C_{ADC}.
2. $C_{parasitic}$ represents the capacitance of the PCB (dependent on soldering and PCB layout quality) plus the pad capacitance (roughly 7 pF). A high $C_{parasitic}$ value will downgrade conversion accuracy. To remedy this, f_{ADC} should be reduced.

6.3.16 Temperature sensor characteristics

Table 56. Temperature sensor calibration values

Calibration value name	Description	Memory address
TS_CAL2	TS ADC raw data acquired at temperature of 130 °C ± 5 °C, V_{DDA}= 3 V ± 10 mV	0x1FF8 007E - 0x1FF8 007F

Table 57. Temperature sensor characteristics

Symbol	Parameter	Min	Typ	Max	Unit
T_L(1)	V_{SENSE} linearity with temperature	-	±1	±2	°C
Avg_Slope(1)	Average slope	1.48	1.61	1.75	mV/°C
V_{130}	Voltage at 130°C ±5°C(2)	640	670	700	mV
$I_{DDA(TEMP)}$(3)	Current consumption	-	3.4	6	µA
t_{START}(3)	Startup time	-	-	10	µs
T_{S_temp}(4)(3)	ADC sampling time when reading the temperature	10	-	-	

1. Guaranteed by characterization results, not tested in production.
2. Measured at V_{DD} = 3 V ±10 mV. V30 ADC conversion result is stored in the TS_CAL1 byte.
3. Guaranteed by design, not tested in production.
4. Shortest sampling time can be determined in the application by multiple iterations.

6.3.17 Comparators

Table 58. Comparator 1 characteristics

Symbol	Parameter	Conditions	Min(1)	Typ	Max(1)	Unit
V_{DDA}	Analog supply voltage	-	1.65		3.6	V
R_{400K}	R_{400K} value	-	-	400	-	kΩ
R_{10K}	R_{10K} value	-	-	10	-	
V_{IN}	Comparator 1 input voltage range	-	0.6	-	V_{DDA}	V
t_{START}	Comparator startup time	-	-	7	10	µs
td	Propagation delay(2)	-	-	3	10	
V_{offset}	Comparator offset(3)	-	-	±3	±10	mV
$d_{Voffset}/dt$	Comparator offset variation in worst voltage stress conditions(3)	V_{DDA} = 3.6 V V_{IN+} = 0 V V_{IN-} = V_{REFINT} T_A = 25 °C	0	1.5	10	mV/1000 h
I_{COMP1}	Current consumption(4)	-	-	160	260	nA

1. Guaranteed by characterization, not tested in production.
2. The delay is characterized for 100 mV input step with 10 mV overdrive on the inverting input, the non-inverting input set to the reference.
3. In TSSOP14 package, where V_{DDA} pin is shared with V_{DD} pin, I/O toggling should be minimized to reach the values given in the above table. I/O toggling with loaded I/O pins can generate ripple on V_{DD}/V_{DDA} and degrade the comparator performance.
4. Comparator consumption only. Internal reference voltage not included.

Table 59. Comparator 2 characteristics

Symbol	Parameter	Conditions	Min	Typ	Max(1)	Unit
V_{DDA}	Analog supply voltage	-	1.65	-	3.6	V
V_{IN}	Comparator 2 input voltage range	-	0	-	V_{DDA}	V
t_{START}	Comparator startup time	Fast mode	-	15	20	µs
		Slow mode	-	20	25	
$t_{d\ slow}$	Propagation delay(2) in slow mode	1.65 V ≤ V_{DDA} ≤ 2.7 V	-	1.8	3.5	
		2.7 V ≤ V_{DDA} ≤ 3.6 V	-	2.5	6	
$t_{d\ fast}$	Propagation delay(2) in fast mode	1.65 V ≤ V_{DDA} ≤ 2.7 V	-	0.8	2	
		2.7 V ≤ V_{DDA} ≤ 3.6 V	-	1.2	4	
V_{offset}	Comparator offset error(3)		-	±4	±20	mV
dThreshold/dt	Threshold voltage temperature coefficient	V_{DDA} = 3.3V T_A = 0 to 50 °C V- = V_{REFINT}, 3/4 V_{REFINT}, 1/2 V_{REFINT}, 1/4 V_{REFINT}.	-	15	30	ppm /°C

Table 59. Comparator 2 characteristics (continued)

Symbol	Parameter	Conditions	Min	Typ	Max(1)	Unit
I_{COMP2}	Current consumption(4)	Fast mode	-	3.5	5	µA
		Slow mode	-	0.5	2	

1. Guaranteed by characterization results, not tested in production.
2. The delay is characterized for 100 mV input step with 10 mV overdrive on the inverting input, the non-inverting input set to the reference.
3. In TSSOP14 package, where V_{DDA} pin is shared with V_{DD} pin, I/O toggling should be minimized to reach the values given in the above table. I/O toggling with loaded I/O pins can generate ripple on V_{DD}/V_{DDA} and degrade the comparator performance.
4. Comparator consumption only. Internal reference voltage (necessary for comparator operation) is not included.

6.3.18 Timer characteristics

TIM timer characteristics

The parameters given in the *Table 60* are guaranteed by design.

Refer to *Section 6.3.13: I/O port characteristics* for details on the input/output alternate function characteristics (output compare, input capture, external clock, PWM output).

Table 60. TIMx(1) characteristics

Symbol	Parameter	Conditions	Min	Max	Unit
$t_{res(TIM)}$	Timer resolution time		1	-	$t_{TIMxCLK}$
		$f_{TIMxCLK}$ = 32 MHz	31.25	-	ns
f_{EXT}	Timer external clock frequency on CH1 to CH4		0	$f_{TIMxCLK}/2$	MHz
		$f_{TIMxCLK}$ = 32 MHz	0	16	MHz
Res_{TIM}	Timer resolution	-		16	bit
$t_{COUNTER}$	16-bit counter clock period when internal clock is selected (timer's prescaler disabled)	-	1	65536	$t_{TIMxCLK}$
		$f_{TIMxCLK}$ = 32 MHz	0.0312	2048	µs
t_{MAX_COUNT}	Maximum possible count	-	-	65536 × 65536	$t_{TIMxCLK}$
		$f_{TIMxCLK}$ = 32 MHz	-	134.2	s

1. TIMx is used as a general term to refer to the TIM2 and TIM21 timers.

6.3.19 Communications interfaces

I²C interface characteristics

The I²C interface meets the timings requirements of the I²C-bus specification and user manual rev. 03 for:

- Standard-mode (Sm) : with a bit rate up to 100 kbit/s
- Fast-mode (Fm) : with a bit rate up to 400 kbit/s
- Fast-mode Plus (Fm+) : with a bit rate up to 1 Mbit/s.

The I²C timing requirements are guaranteed by design when the I²C peripheral is properly configured (refer to the reference manual for details) and when the I2CCLK frequency is greater than the minimum given in *Table 62*. The SDA and SCL I/O requirements are met with the following restrictions: the SDA and SCL I/O pins are not "true" open-drain. When configured as open-drain, the PMOS connected between the I/O pin and VDDIOx is disabled, but is still present. Only FTf I/O pins support Fm+ low level output current maximum requirement (refer to *Section 6.3.13: I/O port characteristics* for the I2C I/Os characteristics).

All I²C SDA and SCL I/Os embed an analog filter (see *Table 61* for the analog filter characteristics).

The analog spike filter is compliant with I²C timings requirements only for the following voltage ranges:

- Fast mode Plus: 2.7 V ≤V_{DD} ≤3.6 V and voltage scaling Range 1
- Fast mode:
  - 2 V ≤V_{DD} ≤3.6 V and voltage scaling Range 1 or Range 2.
  - V_{DD} < 2 V, voltage scaling Range 1 or Range 2, C_{load} < 200 pF.

In other ranges, the analog filter should be disabled. The digital filter can be used instead.

Note: In Standard mode, no spike filter is required.

Table 61. I2C analog filter characteristics(1)

Symbol	Parameter	Conditions	Min	Max	Unit
t_{AF}	Maximum pulse width of spikes that are suppressed by the analog filter	Range 1	50(2)	260(3)	ns
		Range 2		-	
		Range 3		-	

1. Guaranteed by characterization results.
2. Spikes with widths below $t_{AF(min)}$ are filtered.
3. Spikes with widths above $t_{AF(max)}$ are not filtered

Table 62. I2C frequency in all I2C modes

Symbol	Parameter	Condition		Min	Unit
f_{I2CCLK}	I2C clock frequency	Standard-mode		2	MHz
		Fast-mode		8	
		Fast-mode Plus	Analog filter ON, DNF = 0	18	
			Analog filter OFF, DNF = 1	16	

SPI characteristics

Unless otherwise specified, the parameters given in the following tables are derived from tests performed under ambient temperature, f_{PCLKx} frequency and V_{DD} supply voltage conditions summarized in *Table 17*.

Refer to *Section 6.3.12: I/O current injection characteristics* for more details on the input/output alternate function characteristics (NSS, SCK, MOSI, MISO).

Table 63. SPI characteristics in voltage Range 1 (1)

Symbol	Parameter	Conditions	Min	Typ	Max	Unit
f_{SCK} $1/t_{c(SCK)}$	SPI clock frequency	Master mode	-	-	16	MHz
		Slave mode receiver			16	
		Slave mode Transmitter 1.71<V_{DD}<3.6V	-	-	12(2)	
		Slave mode Transmitter 2.7<V_{DD}<3.6V	-	-	16(2)	
$Duty_{(SCK)}$	Duty cycle of SPI clock frequency	Slave mode	30	50	70	%
$t_{su(NSS)}$	NSS setup time	Slave mode, SPI presc = 2	4Tpclk	-	-	ns
$t_{h(NSS)}$	NSS hold time	Slave mode, SPI presc = 2	2Tpclk	-	-	
$t_{w(SCKH)}$ $t_{w(SCKL)}$	SCK high and low time	Master mode	Tpclk-2	Tpclk	Tpclk+2	
$t_{su(MI)}$	Data input setup time	Master mode	3	-	-	
$t_{su(SI)}$		Slave mode	3	-	-	
$t_{h(MI)}$	Data input hold time	Master mode	3.5	-	-	
$t_{h(SI)}$		Slave mode	0	-	-	
$t_{a(SO}$	Data output access time	Slave mode	15	-	36	
$t_{dis(SO)}$	Data output disable time	Slave mode	10	-	30	
$t_{v(SO)}$	Data output valid time	Slave mode 1.71<V_{DD}<3.6V	-	14	35	
		Slave mode 2.7<V_{DD}<3.6V	-	14	20	
$t_{v(MO)}$		Master mode	-	4	6	
$t_{h(SO)}$	Data output hold time	Slave mode	10	-	-	
$t_{h(MO)}$		Master mode	3	-	-	

1. Guaranteed by characterization results, not tested in production.
2. The maximum SPI clock frequency in slave transmitter mode is determined by the sum of $t_{v(SO)}$ and $t_{su(MI)}$ which has to fit into SCK low or high phase preceding the SCK sampling edge. This value can be achieved when the SPI communicates with a master having $t_{su(MI)}$ = 0 while $Duty_{(SCK)}$ = 50%.

Table 64. SPI characteristics in voltage Range 2 (1)

Symbol	Parameter	Conditions	Min	Typ	Max	Unit
f_{SCK} $1/t_{c(SCK)}$	SPI clock frequency	Master mode	-	-	8	MHz
		Slave mode Transmitter $1.65<V_{DD}<3.6V$			8	
		Slave mode Transmitter $2.7<V_{DD}<3.6V$			8(2)	
$Duty_{(SCK)}$	Duty cycle of SPI clock frequency	Slave mode	30	50	70	%
$t_{su(NSS)}$	NSS setup time	Slave mode, SPI presc = 2	4Tpclk	-	-	ns
$t_{h(NSS)}$	NSS hold time	Slave mode, SPI presc = 2	2Tpclk	-	-	
$t_{w(SCKH)}$ $t_{w(SCKL)}$	SCK high and low time	Master mode	Tpclk-2	Tpclk	Tpclk+2	
$t_{su(MI)}$	Data input setup time	Master mode	3	-	-	
$t_{su(SI)}$		Slave mode	3	-	-	
$t_{h(MI)}$	Data input hold time	Master mode	6	-	-	
$t_{h(SI)}$		Slave mode	2	-	-	
$t_{a(SO}$	Data output access time	Slave mode	18	-	52	
$t_{dis(SO)}$	Data output disable time	Slave mode	12	-	42	
$t_{v(SO)}$	Data output valid time	Slave mode	-	16	33	
		Master mode	-	4	6	
$t_{v(MO)}$	Data output hold time	Slave mode	11	-	-	
$t_{h(SO)}$		Master mode	3	-	-	

1. Guaranteed by characterization results, not tested in production.
2. The maximum SPI clock frequency in slave transmitter mode is determined by the sum of $t_{v(SO)}$ and $t_{su(MI)}$ which has to fit into SCK low or high phase preceding the SCK sampling edge. This value can be achieved when the SPI communicates with a master having $t_{su(MI)}$ = 0 while $Duty_{(SCK)}$ = 50%.

Table 65. SPI characteristics in voltage Range 3 (1)

Symbol	Parameter	Conditions	Min	Typ	Max	Unit
f_{SCK} $1/t_{c(SCK)}$	SPI clock frequency	Master mode	-	-	2	MHz
		Slave mode			2(2)	
$Duty_{(SCK)}$	Duty cycle of SPI clock frequency	Slave mode	30	50	70	%
$t_{su(NSS)}$	NSS setup time	Slave mode, SPI presc = 2	4Tpclk	-	-	ns
$t_{h(NSS)}$	NSS hold time	Slave mode, SPI presc = 2	2Tpclk	-	-	
$t_{w(SCKH)}$ $t_{w(SCKL)}$	SCK high and low time	Master mode	Tpclk-2	Tpclk	Tpclk+2	
$t_{su(MI)}$	Data input setup time	Master mode	3	-	-	
$t_{su(SI)}$		Slave mode	3	-	-	
$t_{h(MI)}$	Data input hold time	Master mode	16	-	-	
$t_{h(SI)}$		Slave mode	14	-	-	
$t_{a(SO}$	Data output access time	Slave mode	30	-	70	
$t_{dis(SO)}$	Data output disable time	Slave mode	40	-	80	
$t_{v(SO)}$	Data output valid time	Slave mode	-	26.5	47	
		Master mode	-	4	6	
$t_{v(MO)}$	Data output hold time	Slave mode	20	-	-	
$t_{h(SO)}$		Master mode	3	-	-	

1. Guaranteed by characterization results, not tested in production.
2. The maximum SPI clock frequency in slave transmitter mode is determined by the sum of $t_{v(SO)}$ and $t_{su(MI)}$ which has to fit into SCK low or high phase preceding the SCK sampling edge. This value can be achieved when the SPI communicates with a master having $t_{su(MI)}$ = 0 while $Duty_{(SCK)}$ = 50%.

Figure 28. SPI timing diagram - slave mode and CPHA = 0

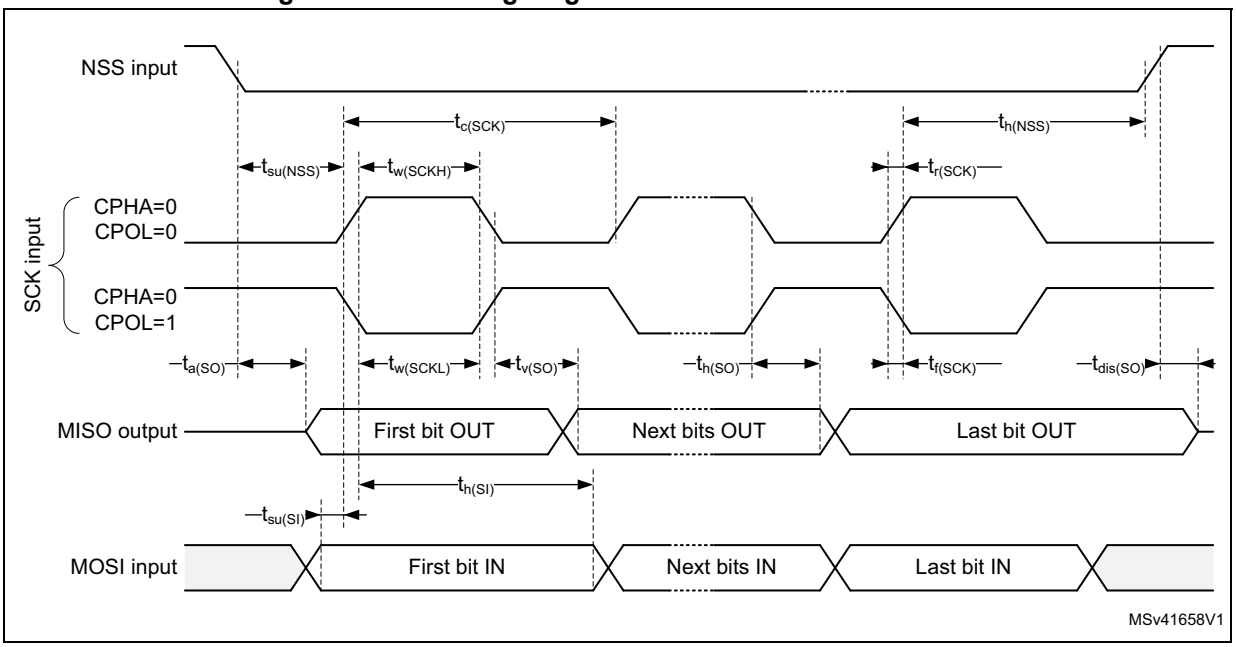

Figure 29. SPI timing diagram - slave mode and CPHA = 1(1)

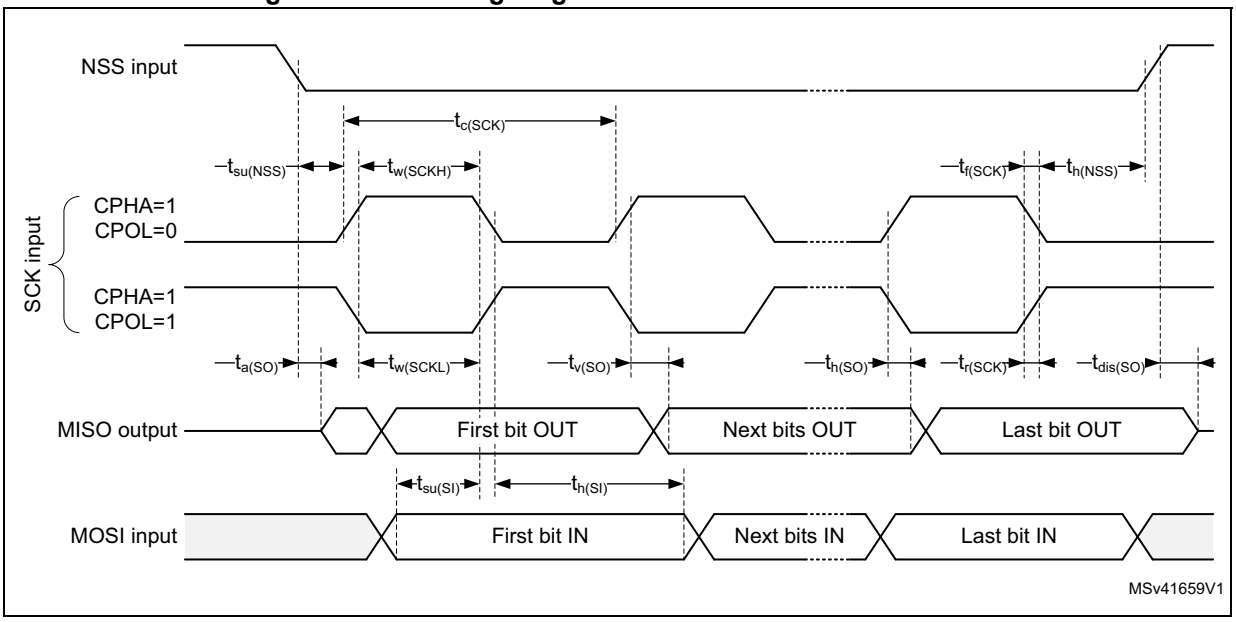

1. Measurement points are done at CMOS levels: $0.3V_{DD}$ and $0.7V_{DD}$.

Figure 30. SPI timing diagram - master mode(1)

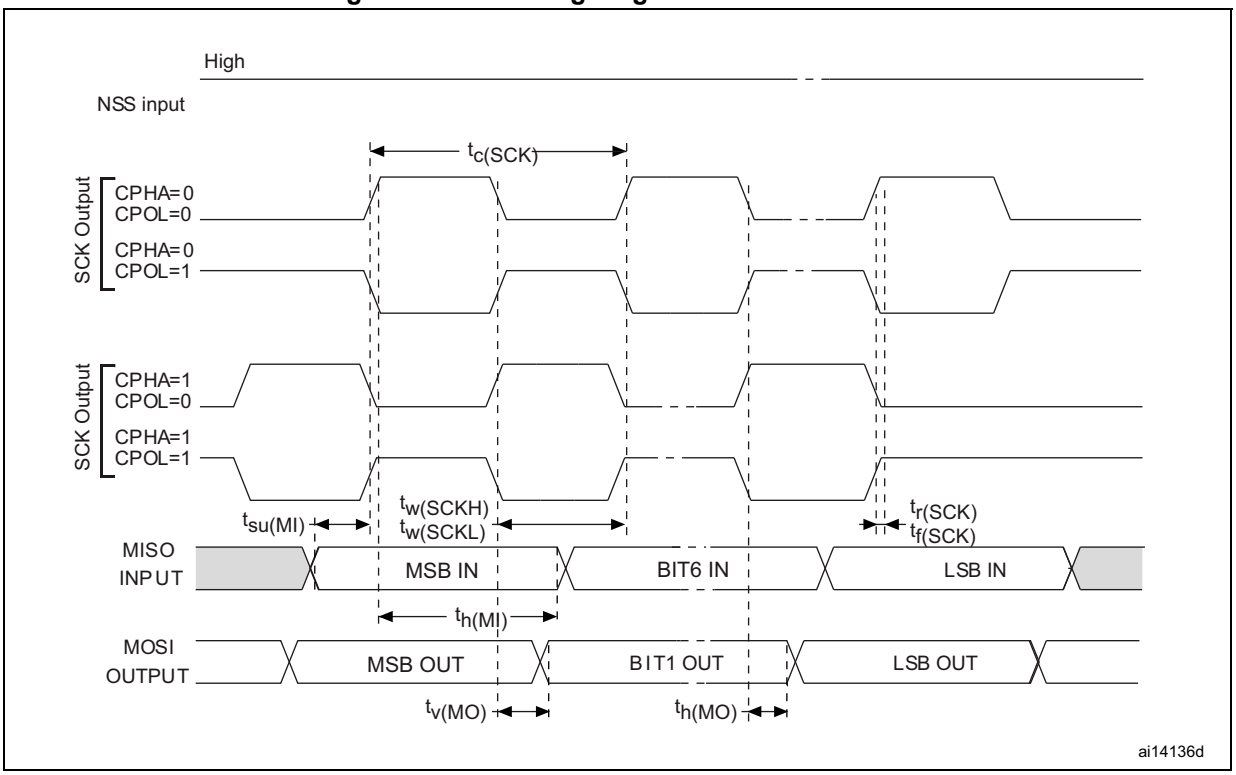

1. Measurement points are done at CMOS levels: $0.3V_{DD}$ and $0.7V_{DD}$.

7 Package information

In order to meet environmental requirements, ST offers these devices in different grades of ECOPACK® packages, depending on their level of environmental compliance. ECOPACK® specifications, grade definitions and product status *are available at http://www.st.com.* ECOPACK® is an ST trademark.

7.1 LQFP32 package information

Figure 31. LQFP32 - 32-pin, 7 x 7 mm, 32-pin low-profile quad flat package outline

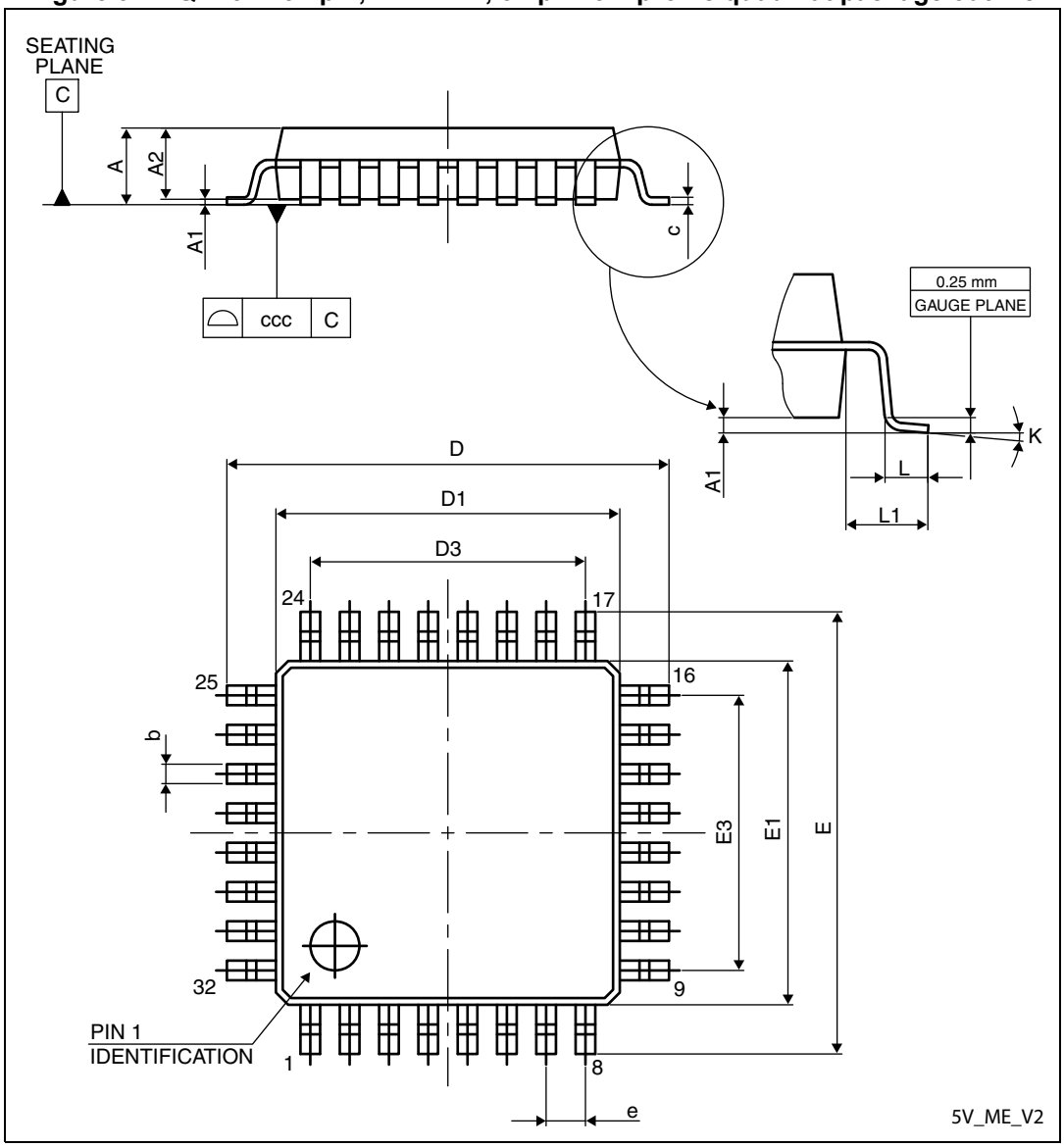

1. Drawing is not to scale.

Table 66. LQFP32 - 32-pin, 7 x 7 mm, 32-pin low-profile quad flat package mechanical data

Symbol	millimeters			inches[1]		
	Min	Typ	Max	Min	Typ	Max
A	-	-	1.600	-	-	0.0630
A1	0.050	-	0.150	0.0020	-	0.0059
A2	1.350	1.400	1.450	0.0531	0.0551	0.0571
b	0.300	0.370	0.450	0.0118	0.0146	0.0177
c	0.090	-	0.200	0.0035	-	0.0079
D	8.800	9.000	9.200	0.3465	0.3543	0.3622
D1	6.800	7.000	7.200	0.2677	0.2756	0.2835
D3	-	5.600	-	-	0.2205	-
E	8.800	9.000	9.200	0.3465	0.3543	0.3622
E1	6.800	7.000	7.200	0.2677	0.2756	0.2835
E3	-	5.600	-	-	0.2205	-
e	-	0.800	-	-	0.0315	-
L	0.450	0.600	0.750	0.0177	0.0236	0.0295
L1	-	1.000	-	-	0.0394	-
ccc	-	-	0.100	-	-	0.0039
k	0°	3.5°	7°	0°	3.5°	7°

1. Values in inches are converted from mm and rounded to 4 decimal digits.

Figure 32. LQFP32 recommended footprint

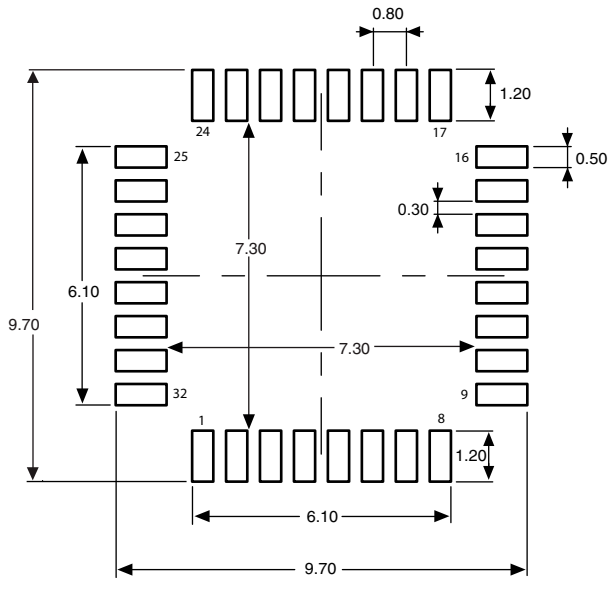

1. Dimensions are expressed in millimeters.

LQFP32 device marking

The following figure gives an example of topside marking versus pin 1 position identifier location.

Other optional marking or inset/upset marks, which depends assembly location, are not indicated below.

Figure 33. Example of LQFP32 marking (package top view)

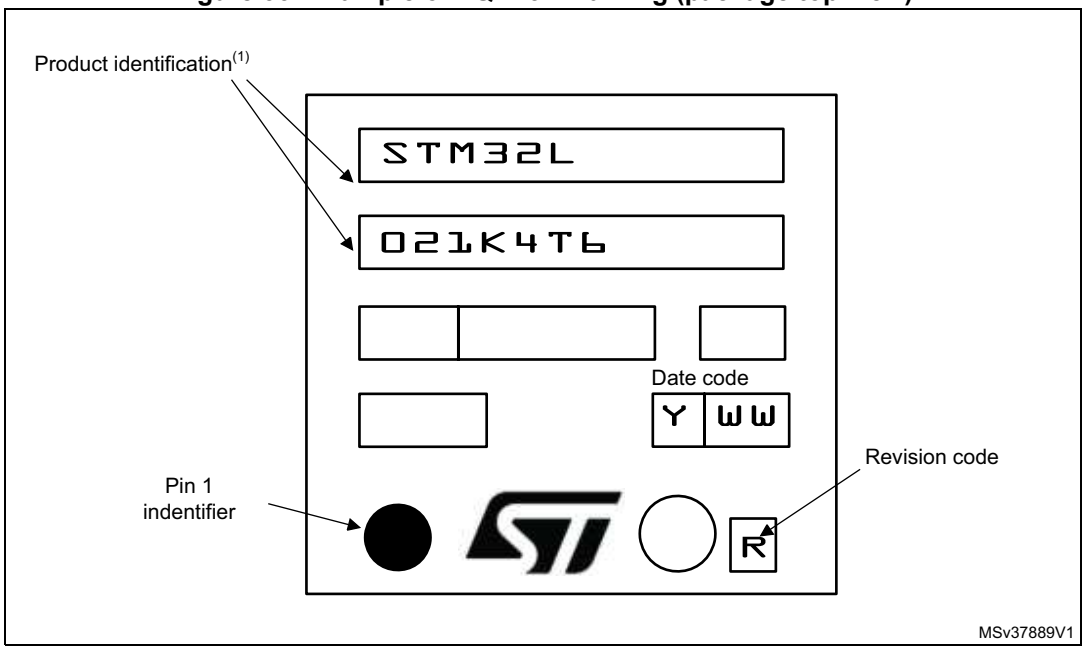

1. Parts marked as “ES”, “E” or accompanied by an Engineering Sample notification letter, are not yet qualified and therefore not yet ready to be used in production and any consequences deriving from such usage will not be at ST charge. In no event, ST will be liable for any customer usage of these engineering samples in production. ST Quality has to be contacted prior to any decision to use these Engineering samples to run qualification activity.

7.2 UFQFPN32 package information

Figure 34. UFQFPN32 - 32-pin, 5x5 mm, 0.5 mm pitch ultra thin fine pitch quad flat package outline

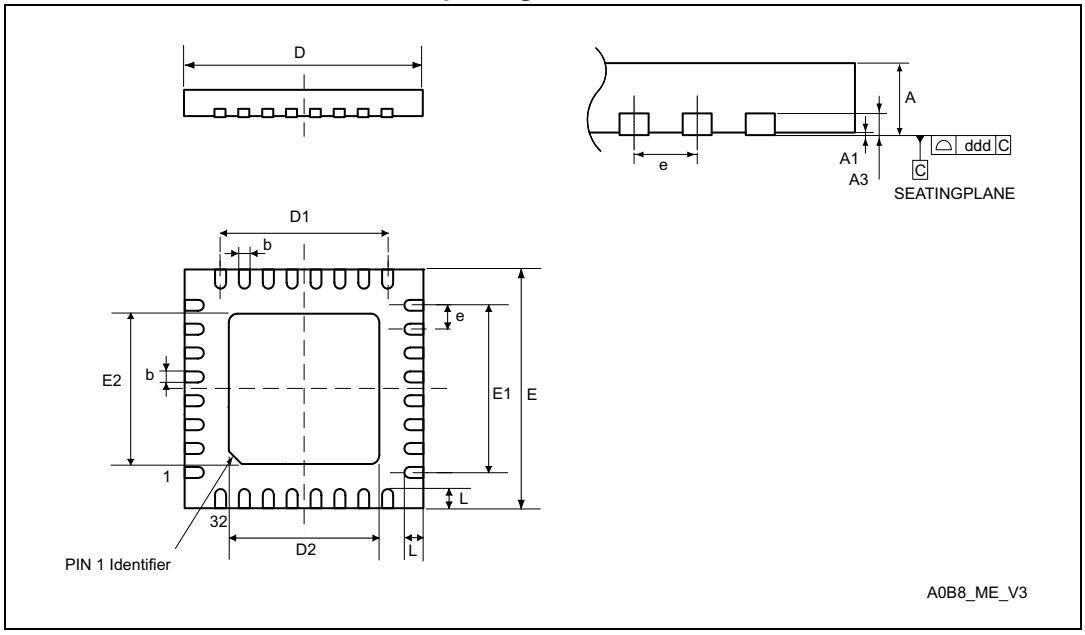

1. Drawing is not to scale.
2. There is an exposed die pad on the underside of the UFQFPN package. It is recommended to connect and solder this backside pad to PCB ground.

Table 67. UFQFPN32 - 32-pin, 5x5 mm, 0.5 mm pitch ultra thin fine pitch quad flat package mechanical data

Symbol	millimeters			inches[1]		
	Min	Typ	Max	Min	Typ	Max
A	0.500	0.550	0.600	0.0197	0.0217	0.0236
A1	-	-	0.050	-	-	0.0020
A3	-	0.152	-	-	0.0060	-
b	0.180	0.230	0.280	0.0071	0.0091	0.0110
D	4.900	5.000	5.100	0.1929	0.1969	0.2008
D1	3.400	3.500	3.600	0.1339	0.1378	0.1417
D2	3.400	3.500	3.600	0.1339	0.1378	0.1417
E	4.900	5.000	5.100	0.1929	0.1969	0.2008
E1	3.400	3.500	3.600	0.1339	0.1378	0.1417
E2	3.400	3.500	3.600	0.1339	0.1378	0.1417
e	-	0.500	-	-	0.0197	-
L	0.300	0.400	0.500	0.0118	0.0157	0.0197
ddd	-	-	0.080	-	-	0.0031

1. Values in inches are converted from mm and rounded to 4 decimal digits.

Figure 35. UFQFPN32 recommended footprint

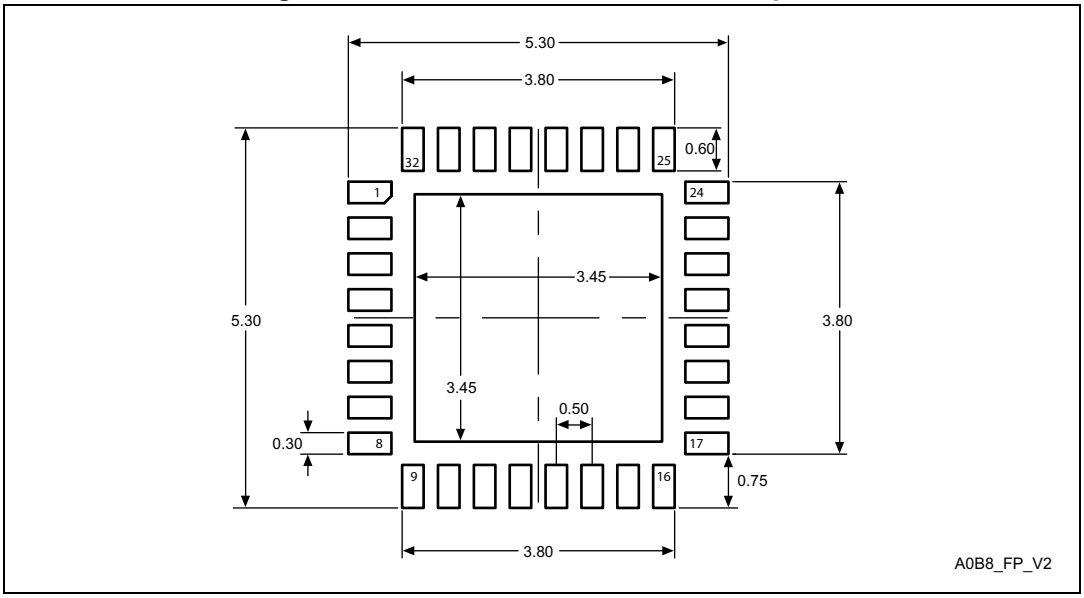

1. Dimensions are expressed in millimeters.

7.3 UFQFPN28 4 x 4 mm package information

Figure 36. UFQFPN28 - 28-lead, 4x4 mm, 0.5 mm pitch, ultra thin fine pitch quad flat package outline

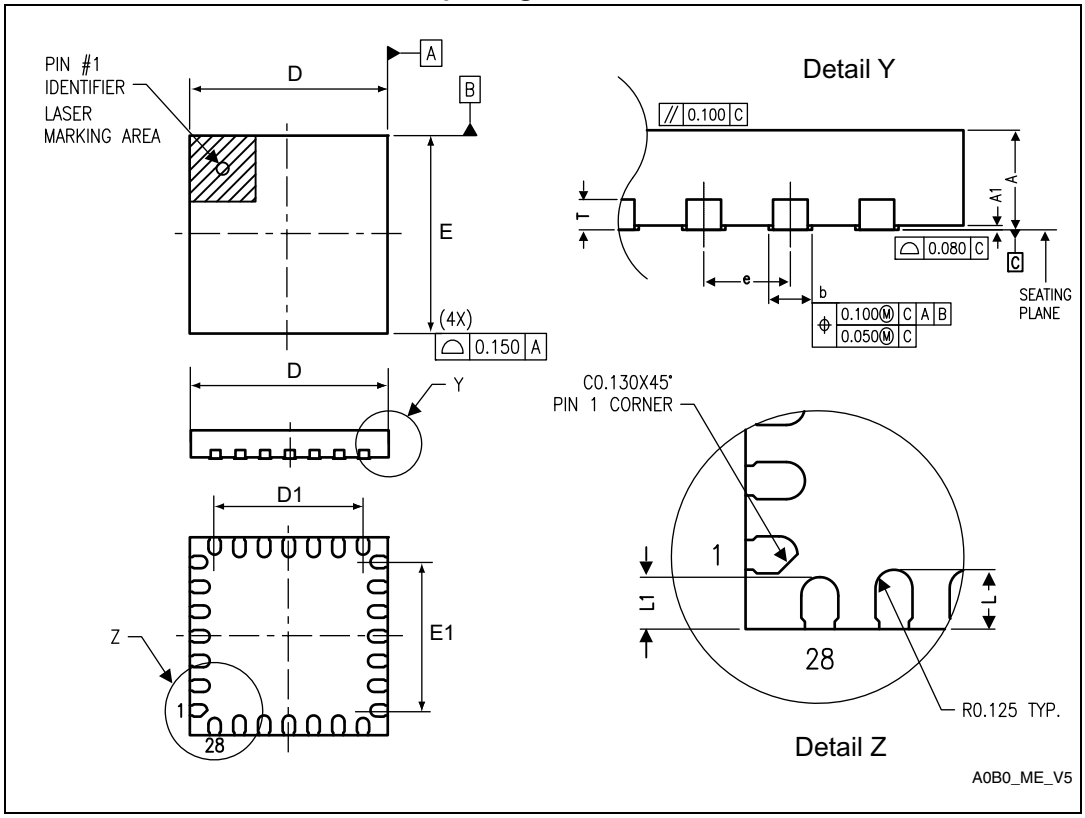

1. Drawing is not to scale.

Table 68. UFQFPN28 - 28-lead, 4x4 mm, 0.5 mm pitch, ultra thin fine pitch quad flat package mechanical data(1)

Symbol	millimeters			inches		
	Min	Typ	Max	Min	Typ	Max
A	0.500	0.550	0.600	0.0197	0.0217	0.0236
A1	-	0.000	0.050	-	0.0000	0.0020
D	3.900	4.000	4.100	0.1535	0.1575	0.1614
D1	2.900	3.000	3.100	0.1142	0.1181	0.1220
E	3.900	4.000	4.100	0.1535	0.1575	0.1614
E1	2.900	3.000	3.100	0.1142	0.1181	0.1220
L	0.300	0.400	0.500	0.0118	0.0157	0.0197
L1	0.250	0.350	0.450	0.0098	0.0138	0.0177
T	-	0.152	-	-	0.0060	-

Table 68. UFQFPN28 - 28-lead, 4x4 mm, 0.5 mm pitch, ultra thin fine pitch quad flat package mechanical data(1) (continued)

Symbol	millimeters			inches		
	Min	Typ	Max	Min	Typ	Max
b	0.200	0.250	0.300	0.0079	0.0098	0.0118
e	-	0.500	-	-	0.0197	-

1. Values in inches are converted from mm and rounded to 4 decimal digits.

Figure 37. UFQFPN28 recommended footprint

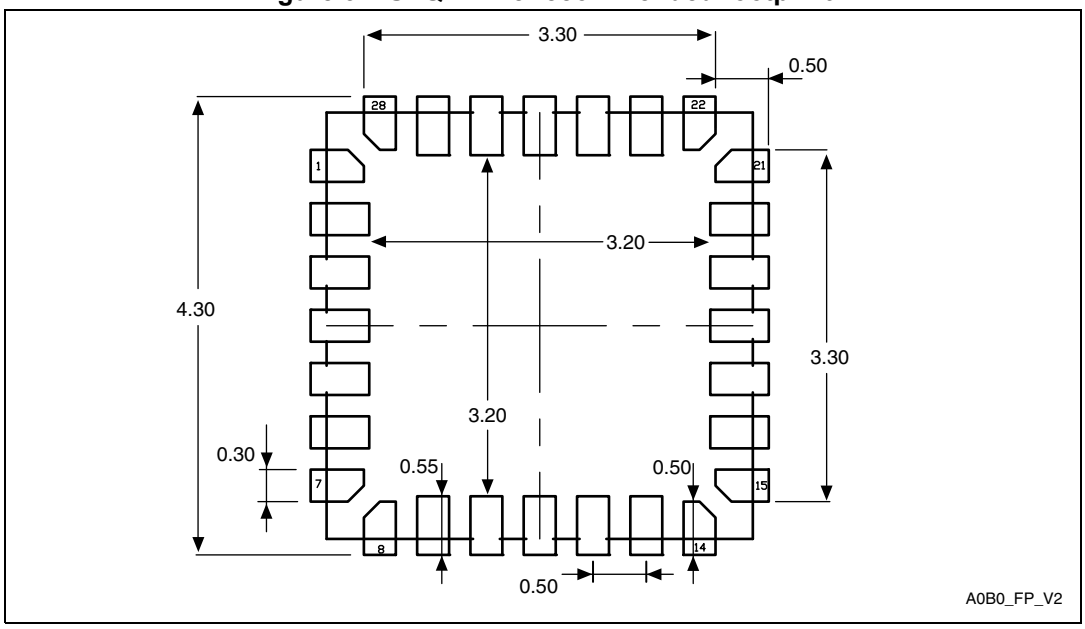

1. Dimensions are expressed in millimeters.

UFQFPN28 device marking

The following figure gives an example of topside marking versus pin 1 position identifier location.

Other optional marking or inset/upset marks, which depends assembly location, are not indicated below.

Figure 38. Example of UFQFPN28 marking (package top view)

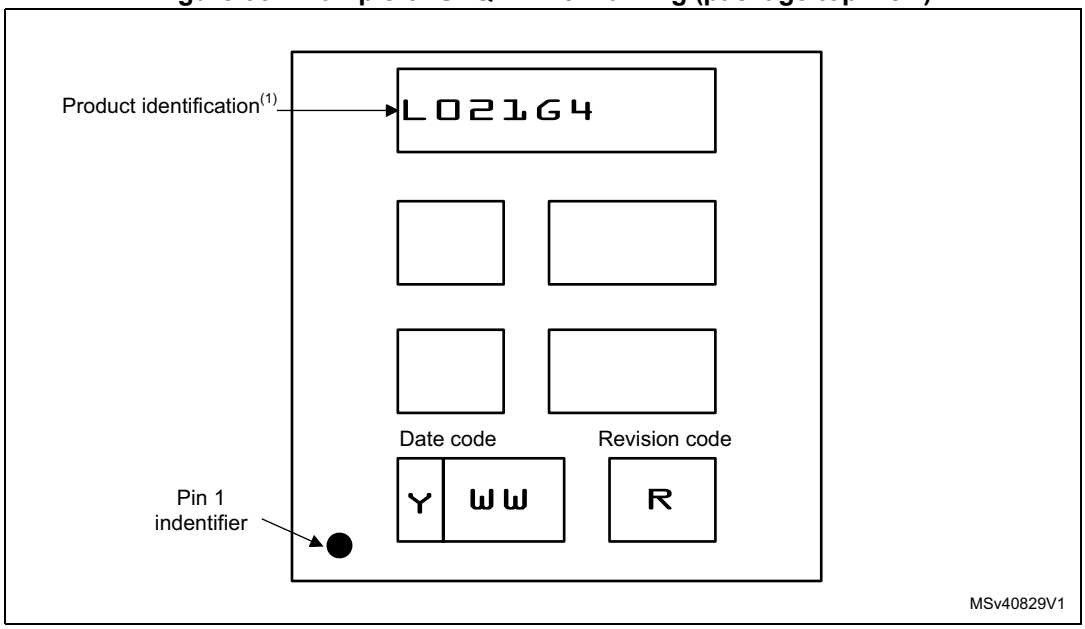

1. Parts marked as “ES”, “E” or accompanied by an Engineering Sample notification letter, are not yet qualified and therefore not yet ready to be used in production and any consequences deriving from such usage will not be at ST charge. In no event, ST will be liable for any customer usage of these engineering samples in production. ST Quality has to be contacted prior to any decision to use these Engineering samples to run qualification activity.

7.4 UFQFPN20 package information

Figure 39. UFQFPN20 - 20-lead, 3x3 mm, 0.5 mm pitch, ultra thin fine pitch quad flat package outline

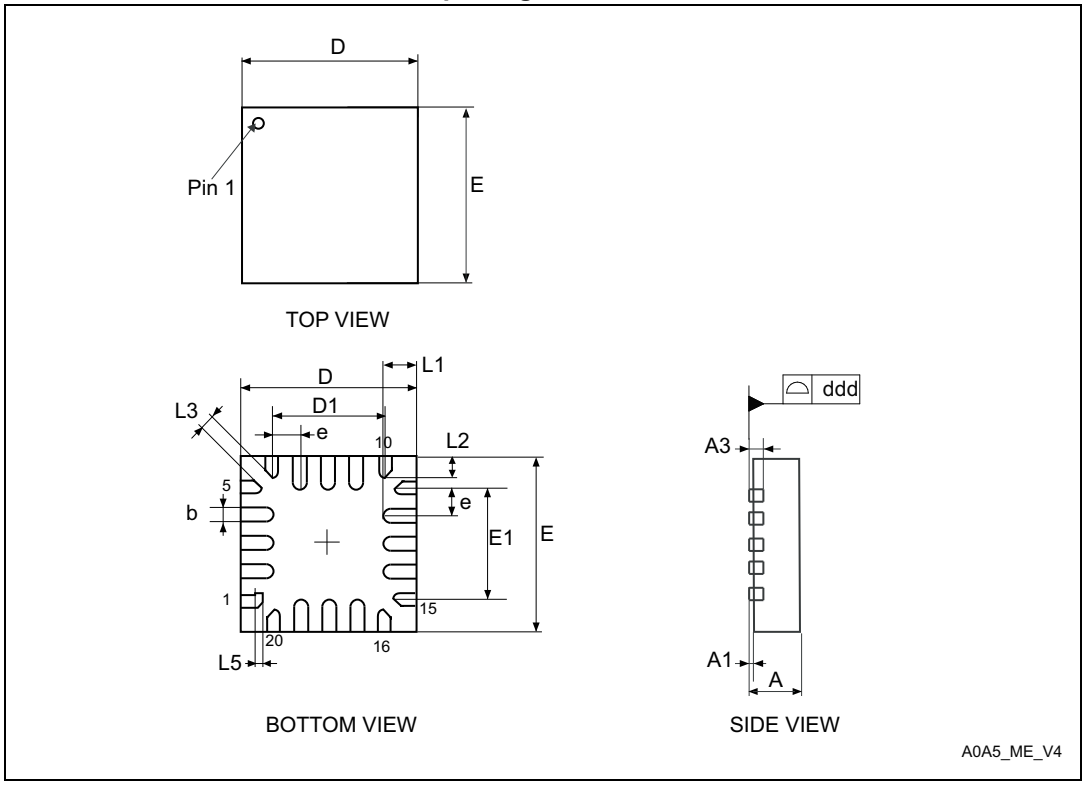

1. Drawing is not to scale.

Table 69. UFQFPN20 - 20-lead, 3x3 mm, 0.5 mm pitch, ultra thin fine pitch quad flat package mechanical data

Symbol	millimeters			inches[1]		
	Min	Typ	Max	Min	Typ	Max
A	0.500	0.550	0.600	0.0197	0.0217	0.0236
A1	0.000	0.020	0.050	0.0000	0.0008	0.0020
A3	-	0.152	-	-	0.060	-
D	2.900	3.000	3.100	0.1142	0.1181	0.1220
D1	-	2.000	-	-	0.0790	-
E	2.900	3.000	3.100	0.1142	0.1181	0.1220
E1	-	2.000	-	-	0.0790	-
L1	0.500	0.550	0.600	0.0197	0.0217	0.0236
L2	0.300	0.350	0.400	0.0118	0.0138	0.0157
L3	-	0.200	-		0.0079	
L5	-	0.150	-		0.0059	

Table 69. UFQFPN20 - 20-lead, 3x3 mm, 0.5 mm pitch, ultra thin fine pitch quad flat package mechanical data (continued)

Symbol	millimeters			inches[1]		
	Min	Typ	Max	Min	Typ	Max
b	0.180	0.250	0.300	0.0071	0.0098	0.0118
e	-	0.500	-	-	0.0197	-
ddd	-	-	0.050	-	-	0.0020

1. Values in inches are converted from mm and rounded to 4 decimal digits.

Figure 40. UFQFPN20 - 20-lead, 3x3 mm, 0.5 mm pitch, ultra thin fine pitch quad flat package recommended footprint

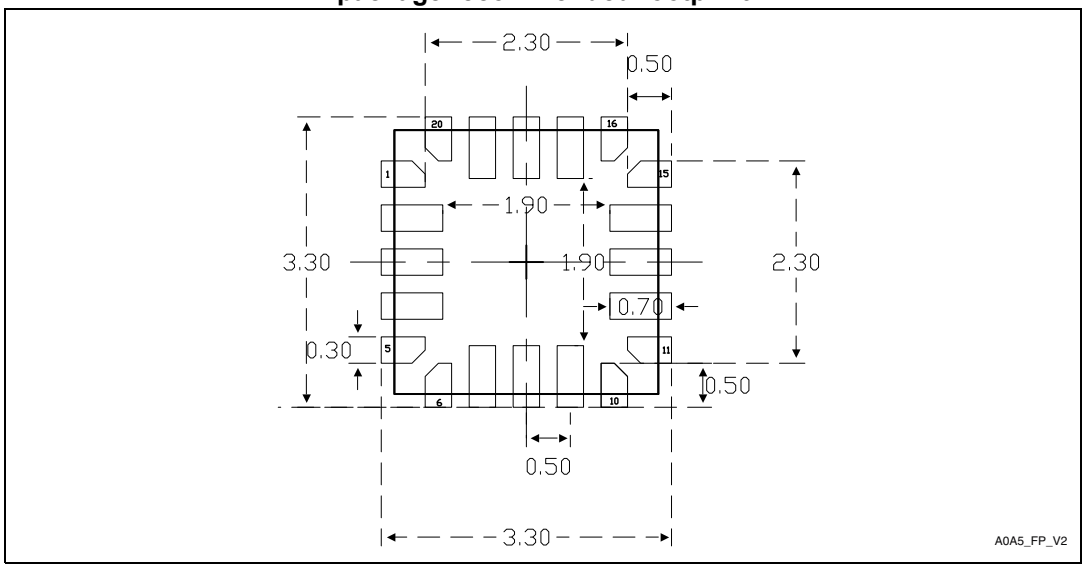

1. Dimensions are expressed in millimeters.

UFQFPN20 device marking

The following figure gives an example of topside marking versus pin 1 position identifier location.

Other optional marking or inset/upset marks, which depends assembly location, are not indicated below.

Figure 41. Example of UFQFPN20 marking (package top view)

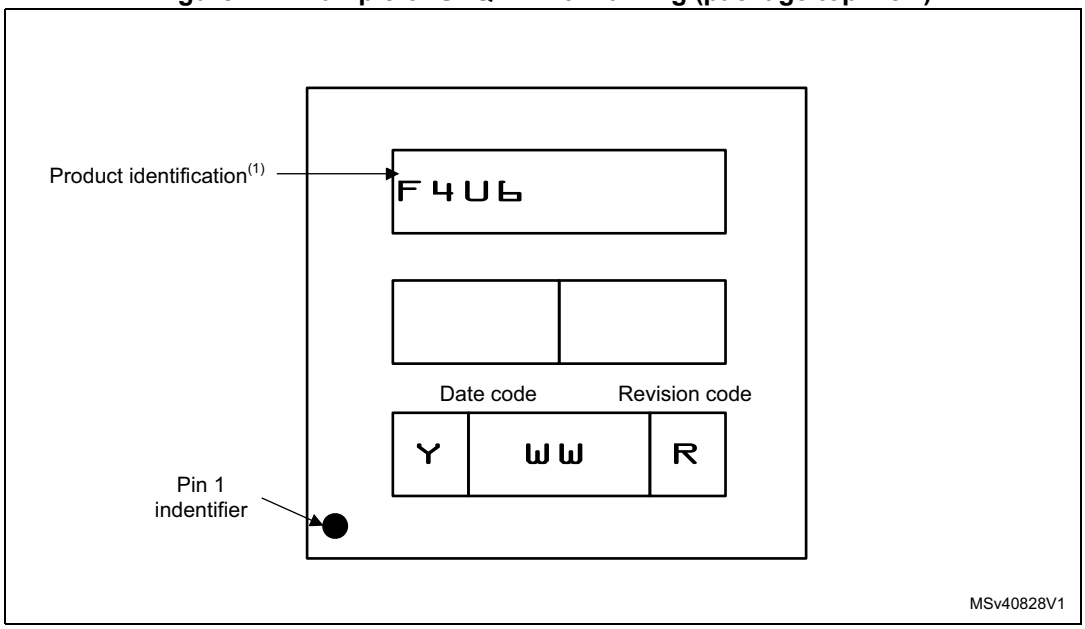

1. Parts marked as “ES”, “E” or accompanied by an Engineering Sample notification letter, are not yet qualified and therefore not yet ready to be used in production and any consequences deriving from such usage will not be at ST charge. In no event, ST will be liable for any customer usage of these engineering samples in production. ST Quality has to be contacted prior to any decision to use these Engineering samples to run qualification activity.

7.5 TSSOP20 package information

Figure 42.TSSOP20 – 20-lead thin shrink small outline, 6.5 x 4.4 mm, 0.65 mm pitch, package outline

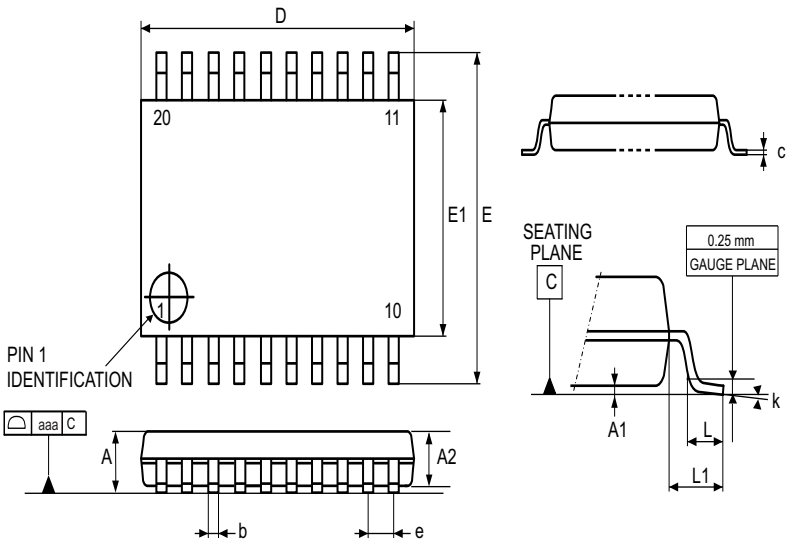

1. Drawing is not to scale.

Table 70. TSSOP20 – 20-lead thin shrink small outline, 6.5 x 4.4 mm, 0.65 mm pitch, package mechanical data

Symbol	millimeters			inches[1]		
	Min.	Typ.	Max.	Min.	Typ.	Max.
A	-	-	1.200	-	-	0.0472
A1	0.050	-	0.150	0.0020	-	0.0059
A2	0.800	1.000	1.050	0.0315	0.0394	0.0413
b	0.190	-	0.300	0.0075	-	0.0118
c	0.090	-	0.200	0.0035	-	0.0079
D[2]	6.400	6.500	6.600	0.2520	0.2559	0.2598
E	6.200	6.400	6.600	0.2441	0.2520	0.2598
E1[3]	4.300	4.400	4.500	0.1693	0.1732	0.1772
e	-	0.650	-	-	0.0256	-
L	0.450	0.600	0.750	0.0177	0.0236	0.0295
L1	-	1.000	-	-	0.0394	-

Table 70. TSSOP20 – 20-lead thin shrink small outline, 6.5 x 4.4 mm, 0.65 mm pitch, package mechanical data (continued)

Symbol	millimeters			inches[1]		
	Min.	Typ.	Max.	Min.	Typ.	Max.
k	0°	-	8°	0°	-	8°
aaa	-	-	0.100	-	-	0.0039

1. Values in inches are converted from mm and rounded to four decimal digits.
2. Dimension “D” does not include mold flash, protrusions or gate burrs. Mold flash, protrusions or gate burrs shall not exceed 0.15mm per side.
3. Dimension “E1” does not include interlead flash or protrusions. Interlead flash or protrusions shall not exceed 0.25mm per side.

Figure 43. TSSOP20 – 20-lead thin shrink small outline, 6.5 x 4.4 mm, 0.65 mm pitch, package footprint

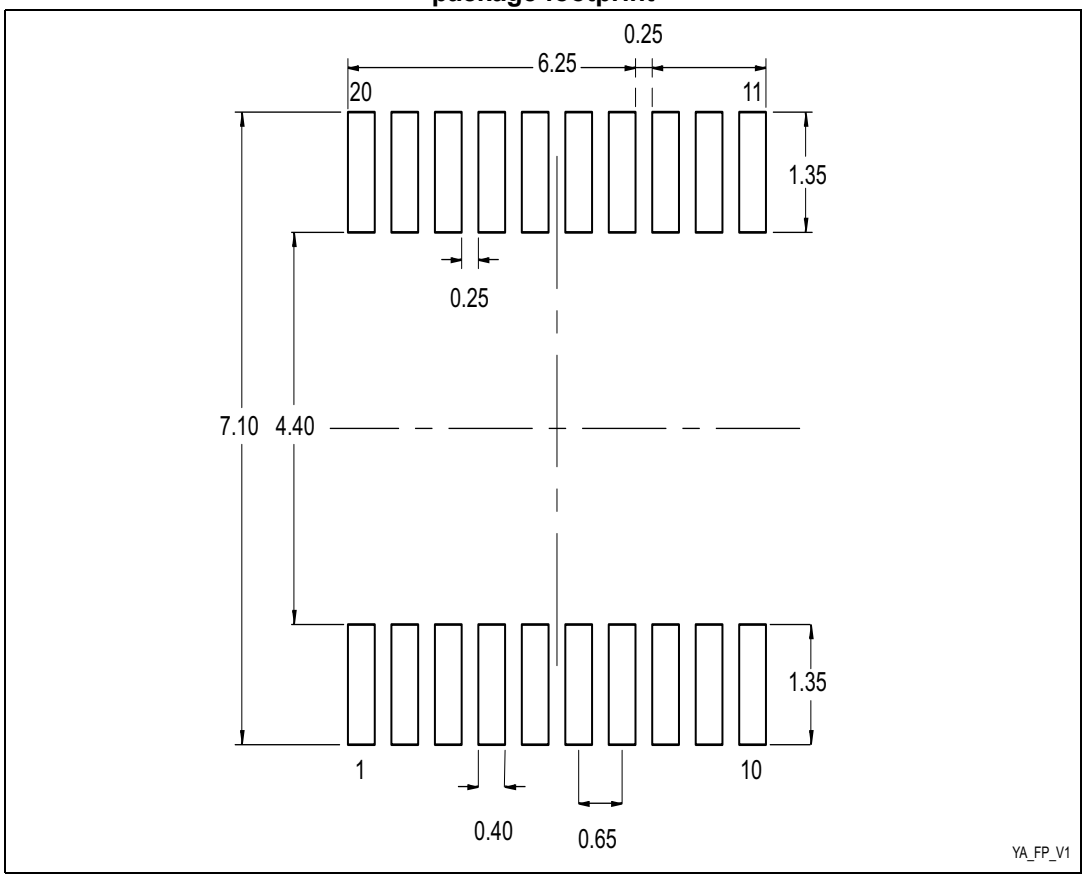

1. Dimensions are expressed in millimeters.

7.6 TSSOP14 package information

Figure 44.TSSOP14 – 14-lead thin shrink small outline, 5.0 x 4.4 mm, 0.65 mm pitch, package outline

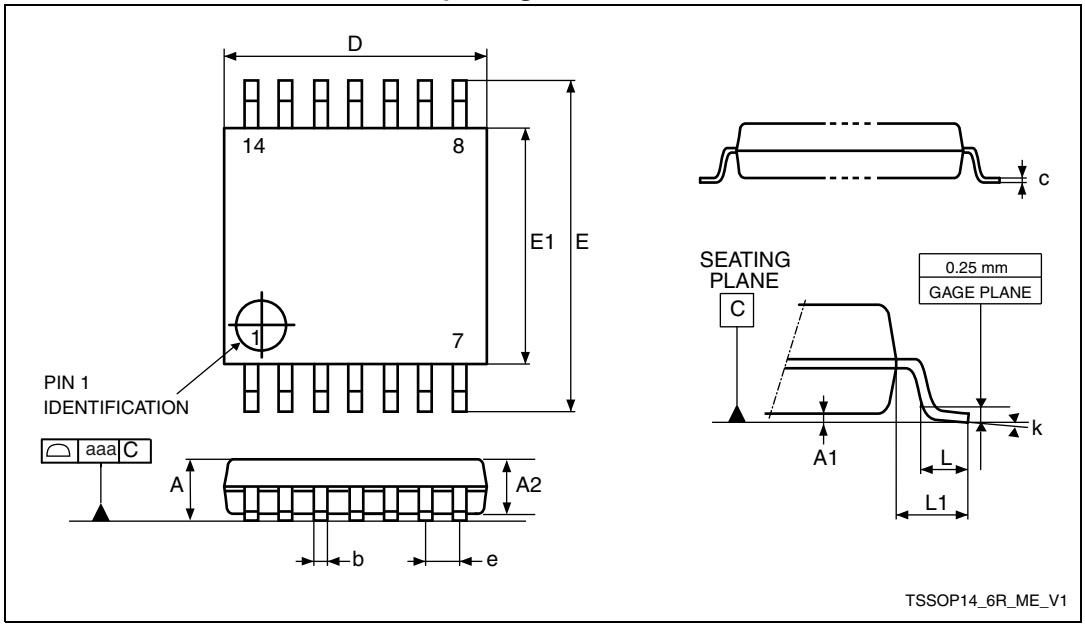

1. Drawing is not to scale.

Table 71. TSSOP14 – 14-lead thin shrink small outline, 5 x 4.4 mm, 0.65 mm pitch, package mechanical data

Symbol	millimeters			inches(1)		
	Min.	Typ.	Max.	Min.	Typ.	Max.
A	-	-	1.200	-	-	0.0472
A1	0.050	-	0.150	0.0020	-	0.0059
A2	0.800	1.000	1.050	0.0315	0.0394	0.0413
b	0.190	-	0.300	0.0075	-	0.0118
c	0.090	-	0.200	0.0035	-	0.0079
D	4.900	5.000	5.100	0.1929	0.1969	0.2008
E	6.200	6.400	6.600	0.2441	0.2520	0.2598
E1	4.300	4.400	4.500	0.1693	0.1732	0.1772
e	-	0.650	-	-	0.0256	-
L	0.450	0.600	0.750	0.0177	0.0236	0.0295
L1	-	1.000	-	-	0.0394	-
k	0°	-	8°	0°	-	8°
aaa	-	-	0.100	-	-	0.0039

1. Values in inches are converted from mm and rounded to four decimal digits.

TSSOP14 device marking

The following figure gives an example of topside marking versus pin 1 position identifier location.

Other optional marking or inset/upset marks, which depends assembly location, are not indicated below.

Figure 45. Example of TSSOP14 marking (package top view)

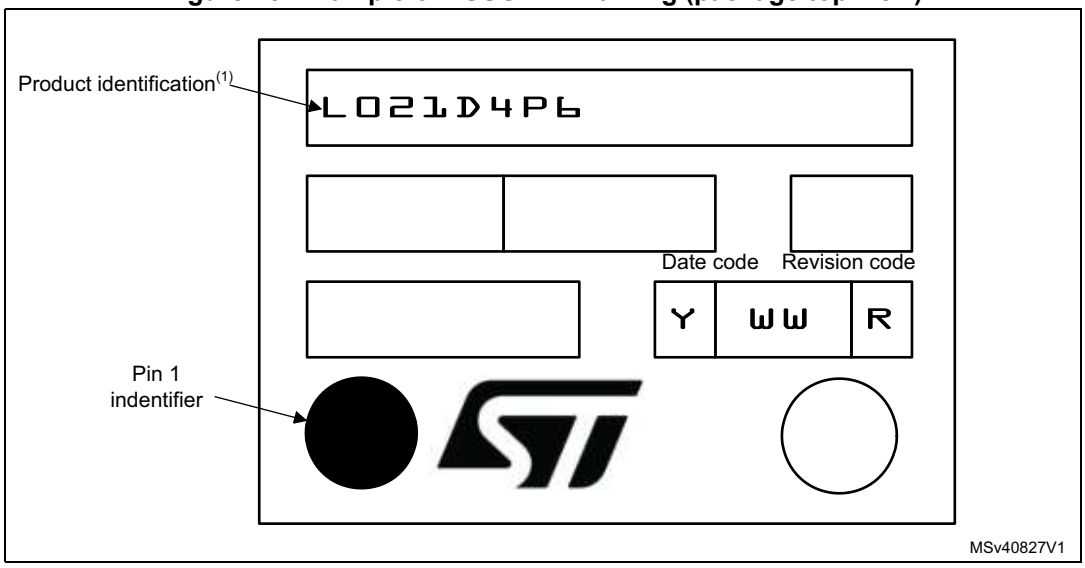

1. Parts marked as “ES”, “E” or accompanied by an Engineering Sample notification letter, are not yet qualified and therefore not yet ready to be used in production and any consequences deriving from such usage will not be at ST charge. In no event, ST will be liable for any customer usage of these engineering samples in production. ST Quality has to be contacted prior to any decision to use these Engineering samples to run qualification activity.

7.7 Thermal characteristics

The maximum chip-junction temperature, T_J max, in degrees Celsius, may be calculated using the following equation:

T_J max = T_A max + (P_D max × Θ_{JA})

Where:

- T_A max is the maximum ambient temperature in °C,
- Θ_{JA} is the package junction-to-ambient thermal resistance, in °C/W,
- P_D max is the sum of P_{INT} max and $P_{I/O}$ max (P_D max = P_{INT} max + $P_{I/O}$max),
- P_{INT} max is the product of I_{DD} and V_{DD}, expressed in Watts. This is the maximum chip internal power.

$P_{I/O}$ max represents the maximum power dissipation on output pins where:

$P_{I/O}$ max = Σ (V_{OL} × I_{OL}) + Σ((V_{DD} – V_{OH}) × I_{OH}),

taking into account the actual V_{OL} / I_{OL} and V_{OH} / I_{OH} of the I/Os at low and high level in the application.

Table 72. Thermal characteristics

Symbol	Parameter	Value	Unit
Θ_{JA}	**Thermal resistance junction-ambient** LQFP32 - 7 x 7 mm / 0.8 mm pitch	60	°C/W
	Thermal resistance junction-ambient UFQFPN32 - 5 x 5 mm / 0.5 mm pitch	39	
	Thermal resistance junction-ambient UFQFPN28 - 4 x 4 mm, 0.5 mm pitch	97	
	Thermal resistance junction-ambient UFQFPN20 - 3 x 3 mm, 0.5 mm pitch	102	
	Thermal resistance junction-ambient TSSOP20 - 169 mils	74	
	Thermal resistance junction-ambient TSSOP14 - 169 mils	95	

Figure 46. Thermal resistance

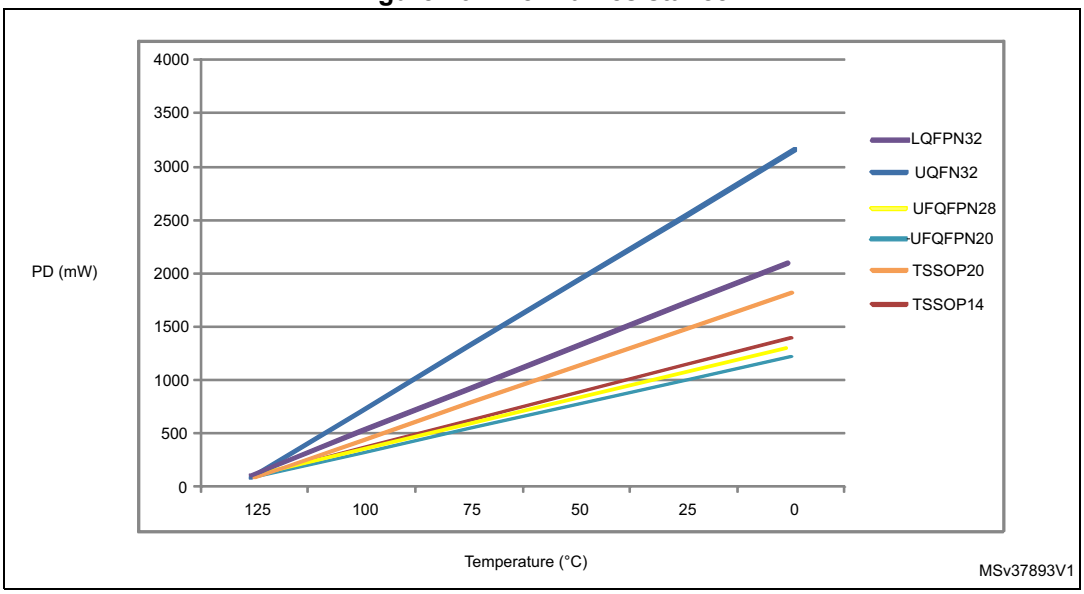

1. The above curves are valid for range 3.

7.7.1 Reference document

JESD51-2 Integrated Circuits Thermal Test Method Environment Conditions - Natural Convection (Still Air). Available from www.jedec.org.

8 Ordering information

Table 73. STM32L021x4 ordering information scheme

Example: STM32 L 021 K 4 T 6 D xxx

Device family

STM32 = Arm-based 32-bit microcontroller

Product type

L = Low power

Device subfamily

021 = Access line with AES

Pin count

K = 32 pins

G = 28 pins

F = 20 pins

D = 14 pins

Flash memory size

4 = 16 Kbytes

Package

T = LQFP

U = UFQFPN

P = TSSOP

Temperature range

6 = Industrial temperature range, –40 to 85 °C

7 = Industrial temperature range, –40 to 105 °C

3 = Industrial temperature range, –40 to 125 °C

Options

No character = V_{DD} range: 1.8 to 3.6 V and BOR enabled

D = V_{DD} range: 1.65 to 3.6 V and BOR disabled

Packing

TR = tape and reel

No character = tray or tube

For a list of available options (speed, package, etc.) or for further information on any aspect of this device, please contact your nearest ST sales office.

9 Revision history

Table 75. Document revision history

Date	Revision	Changes
07-Dec-2015	1	Initial release.
11-Feb-2016	2	*Features*: modified current consumption in run mode, Cortex®-M0+ core frequency range and total number of timers. Updated ADC conversion consumption on cover page. Updated ADC conversion consumption on cover page. Updated UFQFPN28 pinout: *Figure 5: STM32L021x4 UFQFPN28 pinout* and *Table 12: Pin definitions*. Updated *Table 54: RAIN max for fADC = 16 MHz*. Modified TS_CAL2 description in *Table 56: Temperature sensor calibration values*. Added *Section : UFQFPN20 device marking*, *Section : TSSOP14 device marking* and *Section : UFQFPN28 device marking*.
17-Mar-2016	3	Changed minimum comparator supply voltage to 1.65 V on cover page. Added baudrate allowing to wake up the MCU from Stop mode in *Section 3.16.3: Low-power universal asynchronous receiver transmitter (LPUART)*. Added number of fast and standard channels in *Section 3.10: Analog-to-digital converter (ADC)*. Updated *Table 15: Current characteristics* to add the total output current for STM32L021GxUx. Changed V_{DDA} minimum value to 1.65 V in *Table 17: General operating conditions*. Updated *Table 25: Current consumption in Sleep mode*, *Table 26: Current consumption in Low-power Run mode*, *Table 27: Current consumption in Low-power Sleep mode* and *Table 29: Typical and maximum current consumptions in Standby mode*. *Section 6.3.15: 12-bit ADC characteristics*: – *Table 53: ADC characteristics*: Distinction made between V_{DDA} for fast and standard channels; added note *1.* Updated condition for f_{TRIG} measurement. Added note *4.* related to R_{ADC} and removed measurement condition. Updated t_S and t_{CONV}. – Updated equation 1 description. – Updated *Table 54: RAIN max for fADC = 16 MHz* for f_{ADC} = 16 MHz and distinction made between fast and standard channels. – Updated measurement condition in *Table 55: ADC accuracy*. Added *Table 63: USART/LPUART characteristics*.

Table 75. Document revision history

Date	Revision	Changes
20-Jun-2016	4	Updated: – *Features* in cover page: Stop mode values, number of DMA channels, number of I/Os, number of communication peripherals. – *Table 26: Current consumption in Low-power Run mode*, *Table 27: Current consumption in Low-power Sleep mode*, *Table 33: Low-power mode wakeup timings*, *Table 35: Low-speed external user clock characteristics*
12-Sep-2017	5	Removed I/O operation from *Table 2: Functionalities depending on the operating power supply range*. Updated *Section 3.4.4: Boot modes* and added Note *7.* in *Table 12: Pin definitions*. Changed USARTx_RTS and LPUARTx_RTS into USARTx_RTS_DE and LPUARTx_RTS_DE, respectively in *Section 4: Pin descriptions*. In *Section 5: Memory mapping*, replaced memory mapping schematic by reference to the reference manual. Updated introduction text in *Section 6.2: Absolute maximum ratings* to mention device mission profile and extended mission profiles. Added note in *Table 48: I/O current injection susceptibility*. Updated minimum and maximum values of I/O weak pull-up equivalent resistor (R_{PU}) and weak pull-down equivalent resistor (R_{PD}) in *Table 49: I/O static characteristics*. Updated minimum and maximum values of NRST weak pull-up equivalent resistor (R_{PU}) in *Table 52: NRST pin characteristics*. Added note 2 related to the position of the external capacitor below *Figure 25: Recommended NRST pin protection*. Updated *Section : I2C interface characteristics*. Removed section *USART/LPUART characteristics*. Updated *Figure 28: SPI timing diagram - slave mode and CPHA = 0*, *Figure 29: SPI timing diagram - slave mode and CPHA = 1(1)* and *Figure 30: SPI timing diagram - master mode(1)*.

Table 75. Document revision history

Date	Revision	Changes
12-Sep-2017	5 (continued)	In *Section 7: Package information*: – Added paragraph related to optional marking or inset/upset marks in all device marking sections. – Updated *Table 66: LQFP32 - 32-pin, 7 x 7 mm, 32-pin low-profile quad flat package mechanical data*. – Updated *Figure 34: UFQFPN32 - 32-pin, 5x5 mm, 0.5 mm pitch ultra thin fine pitch quad flat package outline* and *Table 67: UFQFPN32 - 32-pin, 5x5 mm, 0.5 mm pitch ultra thin fine pitch quad flat package mechanical data*. – Updated *Figure 39: UFQFPN20 - 20-lead, 3x3 mm, 0.5 mm pitch, ultra thin fine pitch quad flat package outline* and *Table 70: UFQFPN20 - 20-lead, 3x3 mm, 0.5 mm pitch, ultra thin fine pitch quad flat package mechanical data*. – Added notes related to D and E1 in *Table 71: TSSOP20 – 20-lead thin shrink small outline, 6.5 x 4.4 mm, 0.65 mm pitch, package mechanical data*. – Updated *Figure 44: TSSOP14 – 14-lead thin shrink small outline, 5.0 x 4.4 mm, 0.65 mm pitch, package outline* and *Table 71: TSSOP20 – 20-lead thin shrink small outline, 6.5 x 4.4 mm, 0.65 mm pitch, package mechanical data* – Added notes related to D and E1 in *Table 71: TSSOP20 – 20-lead thin shrink small outline, 6.5 x 4.4 mm, 0.65 mm pitch, package mechanical data*. *Section 8* renamed into Ordering information.

IMPORTANT NOTICE – PLEASE READ CAREFULLY

STMicroelectronics NV and its subsidiaries (“ST”) reserve the right to make changes, corrections, enhancements, modifications, and improvements to ST products and/or to this document at any time without notice. Purchasers should obtain the latest relevant information on ST products before placing orders. ST products are sold pursuant to ST’s terms and conditions of sale in place at the time of order acknowledgement.

Purchasers are solely responsible for the choice, selection, and use of ST products and ST assumes no liability for application assistance or the design of Purchasers’ products.

No license, express or implied, to any intellectual property right is granted by ST herein.

Resale of ST products with provisions different from the information set forth herein shall void any warranty granted by ST for such product.

ST and the ST logo are trademarks of ST. All other product or service names are the property of their respective owners.

Information in this document supersedes and replaces information previously supplied in any prior versions of this document.

© 2017 STMicroelectronics – All rights reserved