ESDAxxSCxY

Automotive quad-line Transil™ transient voltage suppressor (TVS) for ESD protection

Datasheet - production data



SOT23-6L

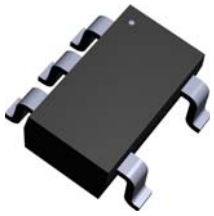

SOT23-5L

Features

- 4 unidirectional Transil functions
- 400 W peak pulse power (8/20 µs)

Benefits

- High EOS and ESD protection levels
- Suitable for high density boards
- AEC-Q101 qualified

Complies with the following standards:

- ISO 10605: C = 150 pF, R = 330 Ω
  - 30 kV (air discharge)
  - 30 kV (contact discharge)
- ISO 10605: C = 330 pF, R = 330 Ω
  - 30 kV (air discharge)
  - 30 kV (contact discharge)
- ISO 7637-2
  - Pulse 1: V_S = -100 V
  - Pulse 2a: V_S = +50 V
  - Pulse 3a: V_S = -150 V
  - Pulse 3b: V_S = +100 V

Applications

Where ESD and EOS transient overvoltage protection in susceptible equipment is required, such as:

- Information - entertainment
- Signal communications
- Connectivity
- Comfort and convenience

Description

The ESDAxxSCxY devices are monolithic voltage suppressors designed to protect components which are connected to data and transmission lines against ESD.

They clamp the voltage just above the logic level supply for positive transients, and to a diode drop below ground for negative transient.

Figure 1. Pin configuration

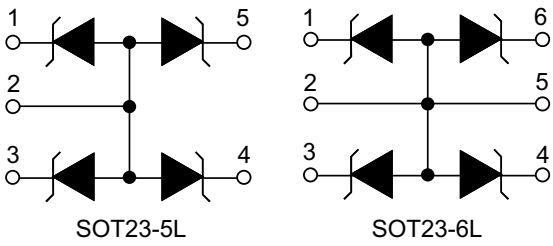

Table 1. Device summary

Order code	V_{BR}(min.)	Package
ESDA5V3SC6Y	5.3	SOT23-6L
ESDA6V1SC6Y	6.1	SOT23-6L
ESDA14V2SC5Y	14.2	SOT23-5L
ESDA14V2SC6Y	14.2	SOT23-6L
ESDA25SC6Y	25	SOT23-6L

This is information on a product in full production. www.st.com

1 Characteristics

Table 2. Absolute ratings (T_{amb} = 25 °C)

Symbol	Parameter		Value	Unit
V_{PP}	Peak pulse voltage	ISO10605 (C = 150 pF, R = 330 Ω) Contact discharge Air discharge ISO10605 (C = 330 pF, R = 330 Ω) Contact discharge Air discharge	 30 30 30 30	kV
P_{PP}	Peak pulse power (8/20µs)	ESDA5V3SC6Y, ESDA6V1SC6Y	300	W
		ESDA14V2SC5Y, ESDA14V2SC6Y, ESDA25SC6Y	400	
I_{PP}	Peak pulse current (8/20µs)	ESDA5V3SC6Y ESDA6V1SC6Y ESDA14V2SC5Y, ESDA14V2SC6Y ESDA25SC6Y	22 18 14 9	A
T_j	Operating junction temperature range		-40 to +150	°C
T_{stg}	Storage temperature range		-65 to +150	°C
T_L	Maximum lead temperature for soldering during 10 s		260	°C

Figure 2. Electrical characteristics (definitions)

Symbol Parameter
V_{BR} = Breakdown voltage
I_{RM} = Leakage current @ V_{RM}
V_{RM} = Stand-off voltage
V_{CL} = Clamping voltage
I_{PP} = Peak pulse current
I_F = Forward current
V_F = Forward voltage
R_d = Dynamic impedance
C_{LINE} = Line capacitance

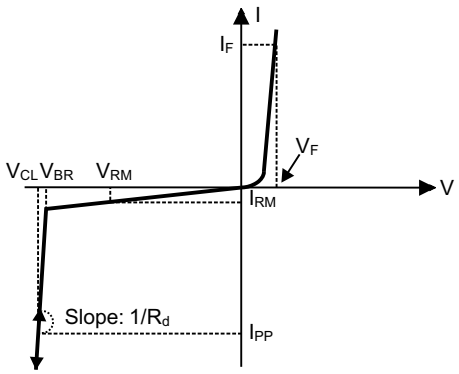

Table 3. Electrical characteristics - values (T_{amb} = 25 °C)

Order code	V_{BR} at I_R			I_{RM} at V_{RM}		V_{CL} at I_{pp} (1)		V_F at I_F		αT (2)	C_{line}
	min.	max.		max.		max.		max.		max.	typ.
	V	V	mA	µA	V	V	A	V	mA	10^{-4}/C	pF
ESDA5V3SC6Y	5.3	5.9	1	2	3	21	22	1.25	200	5	320
ESDA6V1SC6Y	6.1	7.2	1	2	5.2	19	18	1.25	200	6	190
ESDA14V2SC5Y, ESDA14V2SC6Y	14.2	15.8	1	5	12	35	14	1.25	200	10	100
ESDA25SC6Y	25	30	1	1	24	51	9	1.2	10	10	60

1. 8/20 µs waveform
2. $\Delta V_{BR} = \alpha T^* (T_{amb} - 25\ °C) * V_{BR} (25\ °C)$

Figure 3. Pulse power versus junction temperature

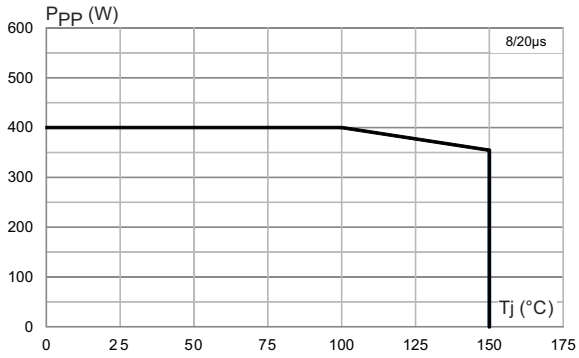

Figure 4. Peak pulse power versus exponential pulse duration (typical values)

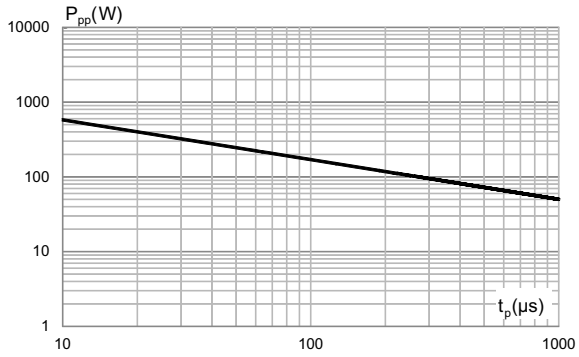

Figure 5. Clamping voltage versus peak pulse current (typical values, 8/20 µs waveform)

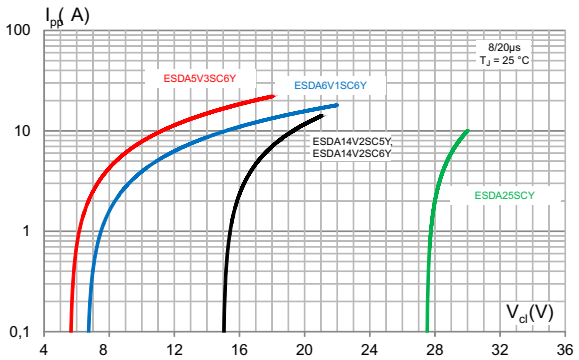

Figure 6. Leakage current versus junction temperature (typical values)

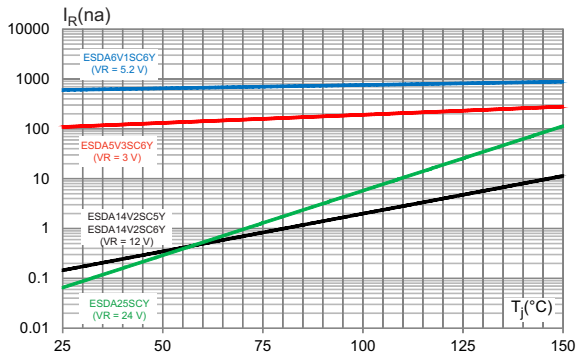

Note: ISO7637-2 pulse responses are not applicable for products with a breakdown voltage lower than the average battery voltage (13.5 V) like ESDA6V1SC6Y.

Figure 7. ISO7637-2 pulse 1 response (V_S = -100 V)

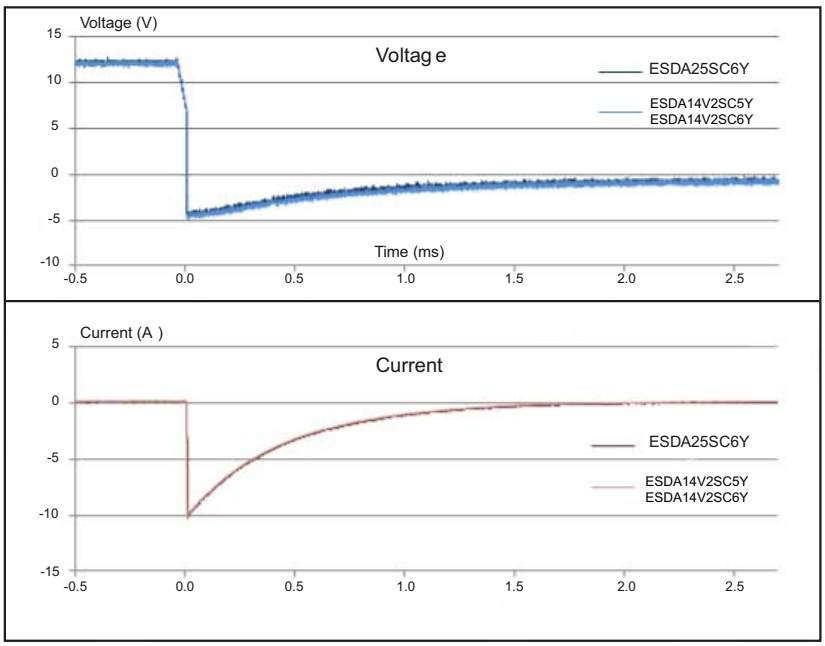

Figure 8. ISO7637-2 pulse 2a response (V_S = 50 V)

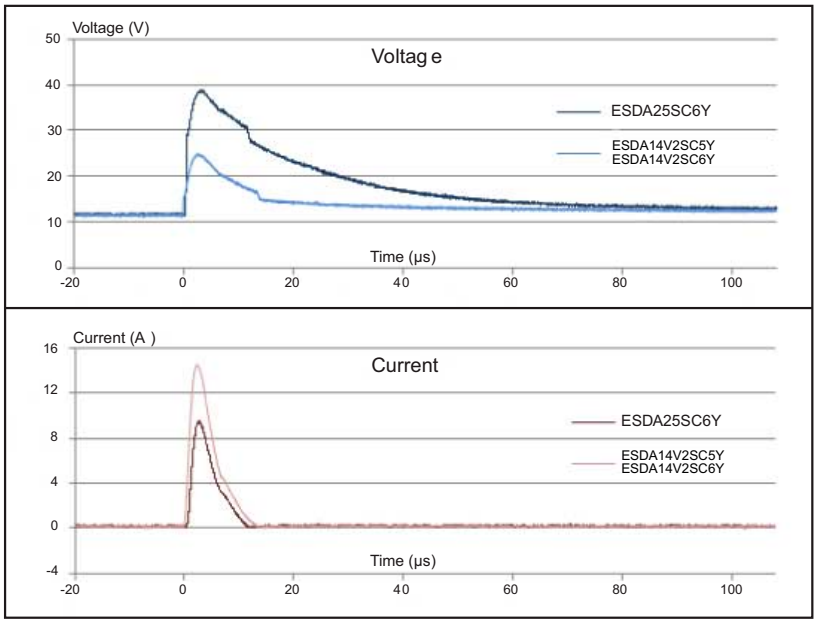

Figure 9. ISO7637-2 pulse 3a response (V_S = -150 V)

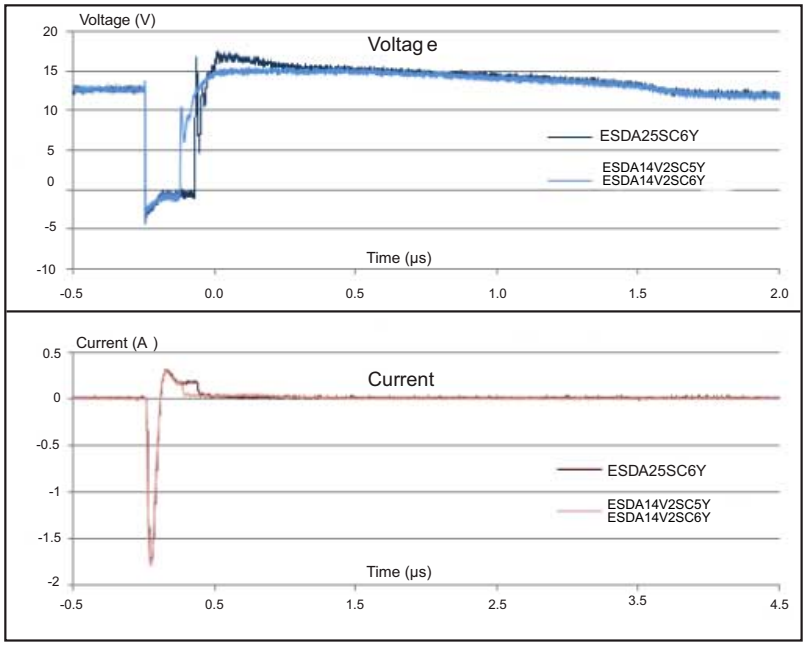

Figure 10. ISO7637-2 pulse 3b response (V_S = 100 V)

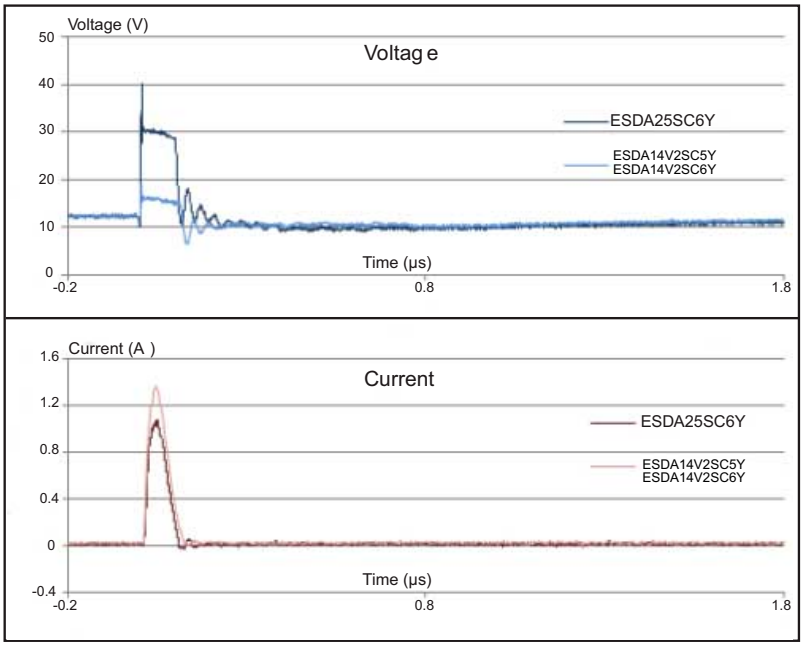

2 Application and design guidelines

More information is available in the STMicroelectronics Application note AN2689: “Protection of automotive electronics from electrical hazards, guidelines for design and component selection”.

3 Package information

- Epoxy meets UL94, V0
- Lead-free packages

In order to meet environmental requirements, ST offers these devices in different grades of ECOPACK® packages, depending on their level of environmental compliance. ECOPACK® specifications, grade definitions and product status are available at: *www.st.com*.
ECOPACK® is an ST trademark.

3.1 SOT23-5L package information

Figure 11. SOT23-5L package outline

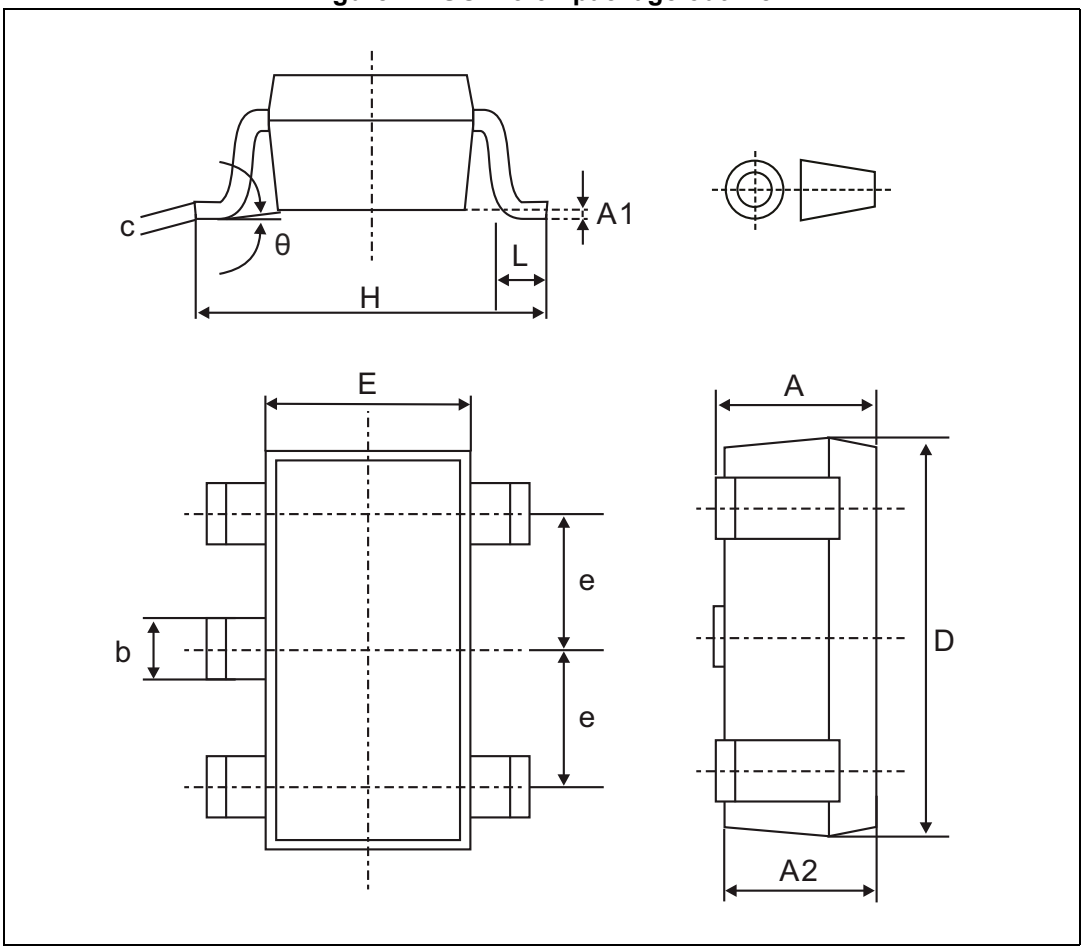

Table 4. SOT23-5L package mechanical data

Ref.	Dimensions					
	Millimeters			Inches		
	Min.	Typ.	Max.	Min.	Typ.	Max.
A	0.90		1.45	0.0354		0.0570
A1	0		0.15	0		0.0059
A2	0.90		1.30	0.0354		0.0511
b	0.30		0.50	0.0118		0.0196
c	0.09		0.20	0.0035		0.0078
D	2.80		3.05	0.1102		0.1200
E	1.50		1.75	0.0590		0.0688
e		0.95			0.0374	
H	2.60		3.00	0.1023		0.1181
L	0.30		0.60	0.0118		0.0236
θ	0°		10°	0°		10°

Figure 12. SOT23-5L footprint (dimensions in mm)

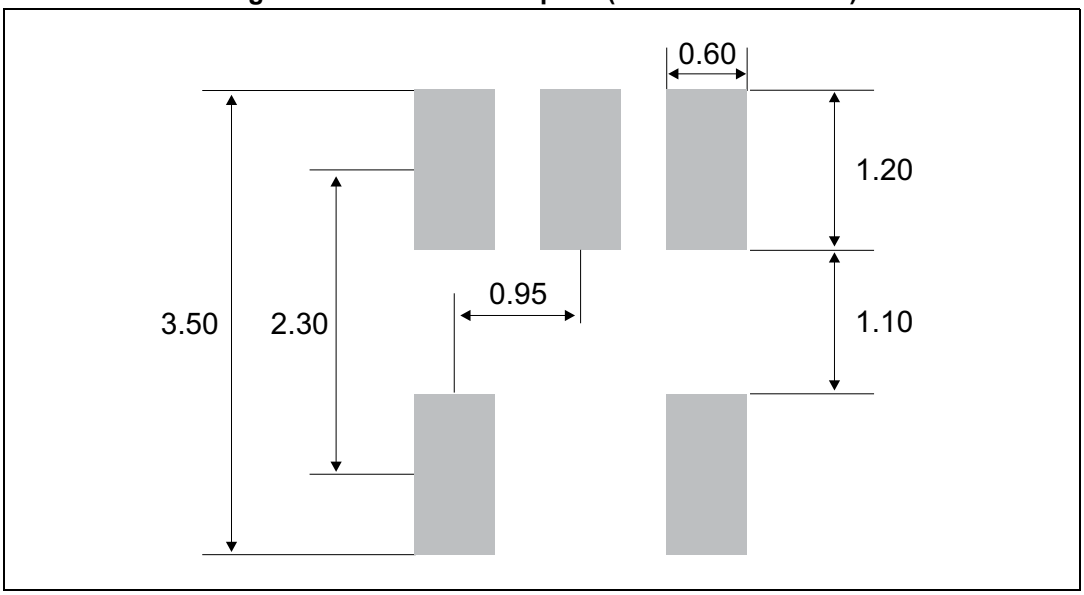

3.2 SOT23-6L package information

Figure 13. SOT23-6L package outline

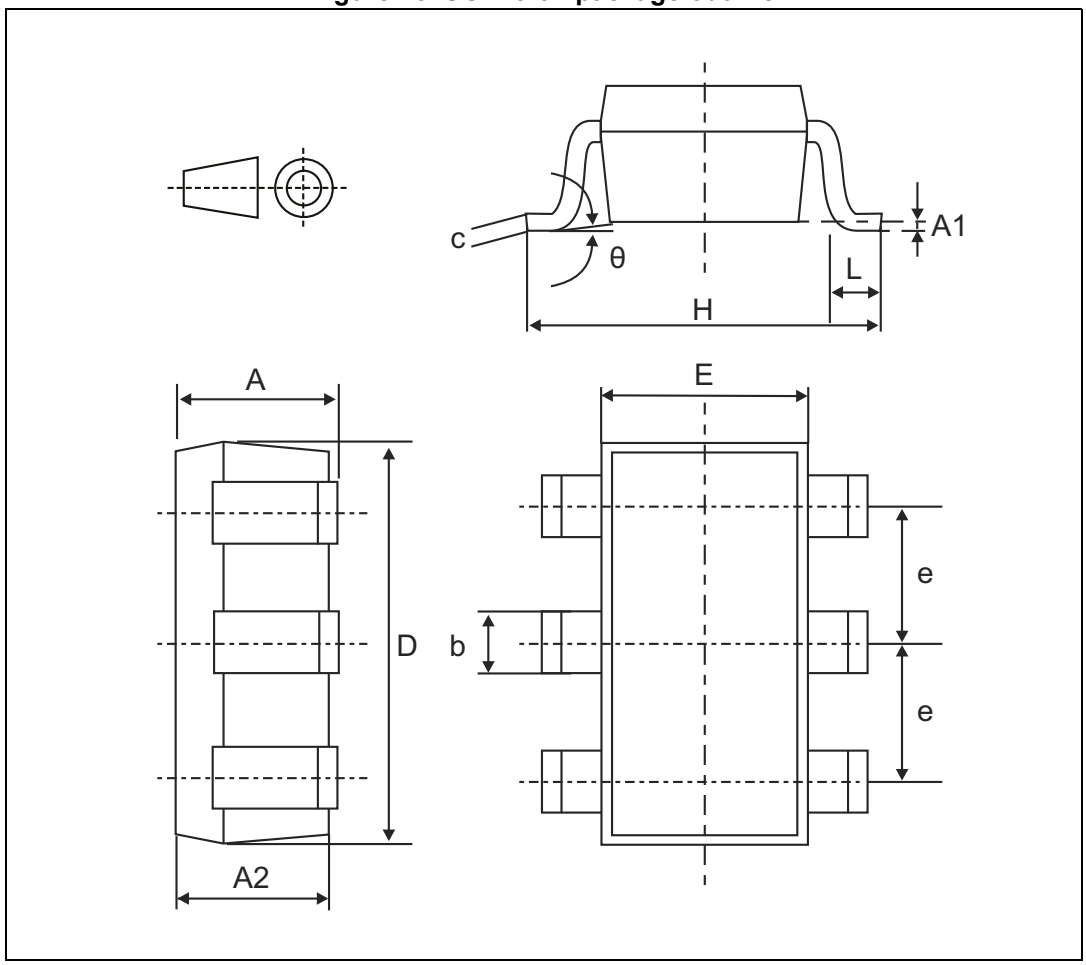

Table 5. SOT23-6L package mechanical data

Ref.	Dimensions					
	Millimeters			Inches		
	Min.	Typ.	Max.	Min.	Typ.	Max.
A	0.90		1.45	0.0354		0.0570
A1	0		0.15	0		0.0059
A2	0.90		1.30	0.0354		0.0511
b	0.30		0.50	0.0118		0.0196
c	0.09		0.20	0.0035		0.0078
D	2.80		3.05	0.1102		0.1200
E	1.50		1.75	0.0590		0.0688
e		0.95			0.0374	
H	2.60		3.00	0.1023		0.1181
L	0.30		0.60	0.0118		0.0236
θ	0°		10°	0°		10°

Figure 14. SOT23-6L footprint (dimensions in mm)

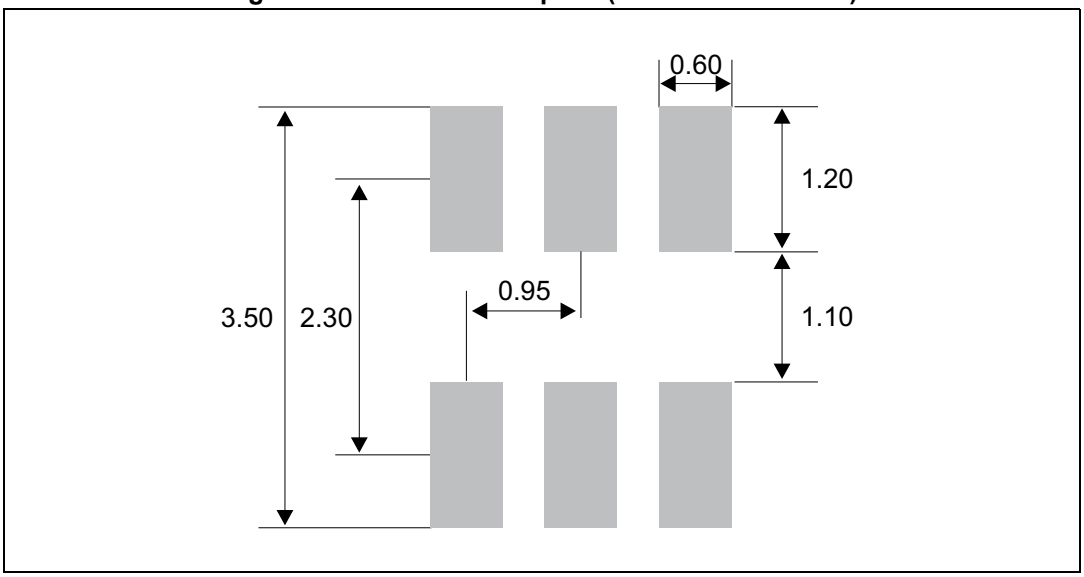

4 Recommendation on PCB assembly

4.1 Solder paste

1. Use halide-free flux, qualification ROL0 according to ANSI/J-STD-004.
2. “No clean” solder paste recommended.
3. Offers a high tack force to resist component displacement during PCB movement.
4. Use solder paste with fine particles: powder particle size 20-45 µm.

4.2 Placement

1. Manual positioning is not recommended.
2. It is recommended to use the lead recognition capabilities of the placement system, not the outline centering.
3. Standard tolerance of ± 0.05 mm is recommended.
4. 3.5 N placement force is recommended. Too much placement force can lead to squeezed out solder paste and cause solder joints to short. Too low placement force can lead to insufficient contact between package and solder paste that could cause open solder joints or badly centered packages.
5. To improve the package placement accuracy, a bottom side optical control should be performed with a high resolution tool.
6. For assembly, a perfect supporting of the PCB (all the more on flexible PCB) is recommended during solder paste printing, pick and place and reflow soldering by using optimized tools.

4.3 PCB design preference

1. To control the solder paste amount, the closed via is recommended instead of open vias.
2. The position of tracks and open vias in the solder area should be well balanced. The symmetrical layout is recommended, in case any tilt phenomena caused by asymmetrical solder paste amount due to the solder flow away.

4.4 Reflow profile

Figure 15. ST ECOPACK® recommended soldering reflow profile for PCB mounting

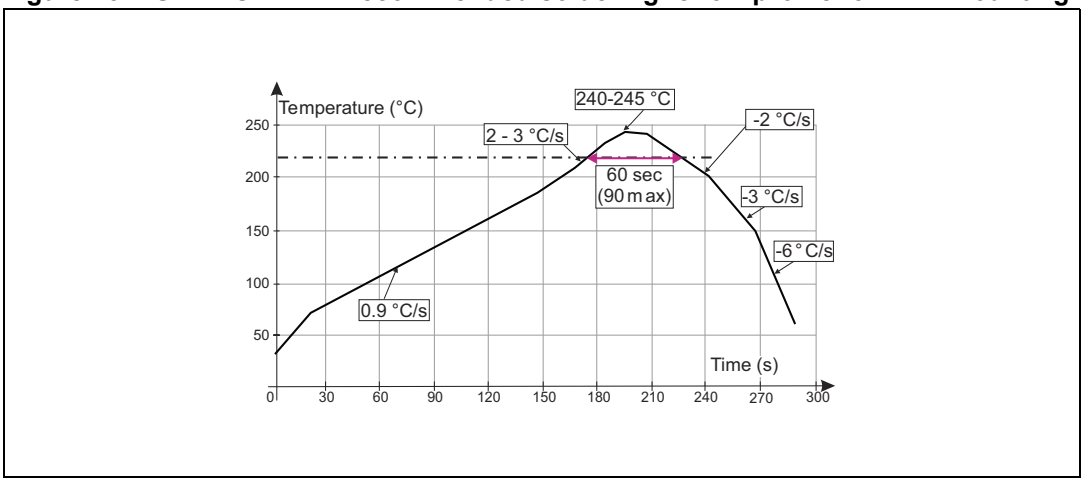

Note: Minimize air convection currents in the reflow oven to avoid component movement.

5 Ordering information

Figure 16. Ordering information scheme

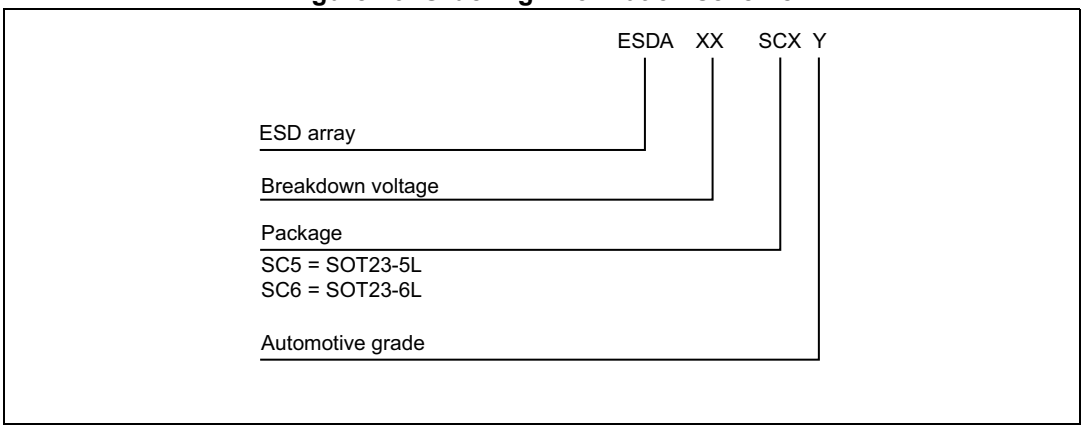

Table 6. Ordering information

Order codes	Marking(1)	Package	Weight	Base qty	Delivery mode
ESDA5V3SC6Y	ES5Y	SOT23-6L	14 mg	3000	Tape and reel
ESDA6V1SC6Y	ES6Y	SOT23-6L			
ESDA14V2SC5Y	EC1Y	SOT23-5L	16 mg		
ESDA14V2SC6Y	ES1Y	SOT23-6L			
ESDA25SC6Y	ES2Y	SOT23-6L	14 mg		

1. The marking can be rotated by multiples of 90° to differentiate assembly location

6 Revision history

Table 7. Document revision history

Date	Revision	Changes
05-Oct-2015	1	Initial release.

IMPORTANT NOTICE – PLEASE READ CAREFULLY

STMicroelectronics NV and its subsidiaries (“ST”) reserve the right to make changes, corrections, enhancements, modifications, and improvements to ST products and/or to this document at any time without notice. Purchasers should obtain the latest relevant information on ST products before placing orders. ST products are sold pursuant to ST’s terms and conditions of sale in place at the time of order acknowledgement.

Purchasers are solely responsible for the choice, selection, and use of ST products and ST assumes no liability for application assistance or the design of Purchasers’ products.

No license, express or implied, to any intellectual property right is granted by ST herein.

Resale of ST products with provisions different from the information set forth herein shall void any warranty granted by ST for such product.

ST and the ST logo are trademarks of ST. All other product or service names are the property of their respective owners.

Information in this document supersedes and replaces information previously supplied in any prior versions of this document.

© 2015 STMicroelectronics – All rights reserved