Ordering number : ENA0377A

LB11988V

Monolithic Digital IC

Fan Motor Driver

ON Semiconductor®

http://onsemi.com

Overview

LB11988V is a motor driver IC optimal for driving the DC fan motors.

Functions

- Three-phase full-wave current linear drive
- Built-in current limiter circuit
- Built-in saturation prevention circuits in both the upper and lower sides of the output stage
- Forward/backward rotation direction setting circuit built in
- FG amplifier
- Thermal shutdown circuit

Specifications

Absolute Maximum Ratings at Ta = 25°C

Parameter	Symbol	Conditions	Ratings	Unit
Maximum supply voltage	V_{CC} max		24	V
	V_S max		24	V
Maximum output current	I_O max		1.3	A
Allowable power dissipation	Pd max	Independent IC	0.5	W
Operating temperature	Topr		-30 to +75	°C
Storage temperature	Tstg		-55 to +150	°C

Caution 1) Absolute maximum ratings represent the value which cannot be exceeded for any length of time.
Caution 2) Even when the device is used within the range of absolute maximum ratings, as a result of continuous usage under high temperature, high current, high voltage, or drastic temperature change, the reliability of the IC may be degraded. Please contact us for the further details.

Stresses exceeding Maximum Ratings may damage the device. Maximum Ratings are stress ratings only. Functional operation above the Recommended Operating Conditions is not implied. Extended exposure to stresses above the Recommended Operating Conditions may affect device reliability.

Allowable Operating Ratings at Ta = 25°C

Parameter	Symbol	Conditions	Ratings	Unit
Supply voltage	V_S		5 to 22	V
	V_{CC}		7 to 22	V
Hall input amplitude	V_{HALL}	Between Hall inputs	±30 to ±80	mVo-p

Electrical Characteristics at Ta = 25°C, V_{CC} = 12V, V_S = 12V

Parameter	Symbol	Conditions	Ratings			Unit
			min	typ	max	
V_{CC} current drain	I_{CC}	R_L = 560Ω (Y)		15	24	mA
Output						
Output saturation voltage	$V_O$sat1	I_O = 500mA, Rf = 0.5Ω, Sink + Source (Saturation prevention function included)		2.1	2.6	V
	$V_O$sat2	I_O = 1.0A, Rf = 0.5Ω, Sink + Source (Saturation prevention function included)		2.6	3.5	V
Output leakage current	$I_O$leak				1.0	mA
Hall amplifier						
Input offset voltage	V_{off} (HALL)		-6		+6	mV
Input bias current	V_b (HALL)	V_{IN}, W_{IN}		1	3	µA
Common-mode input voltage	V_{cm} (HALL)		3		V_{CC}-3	V
FR						
Threshold voltage	V_{FRTH}		4		8	V
Input bias current	Ib (FR)		-5			µA
Current limiter						
LIM pin current limit level	I_{LIM}	Rf = 0.5Ω, With the Hall input logic states fixed (U, V, W = high, high, low)		1		A
Saturation						
Saturation prevention circuit lower side voltage setting	$V_O$sat (DET)	RL = 560Ω (Y), Rf = 0.5Ω, The voltage between each output and the corresponding Rf.		0.28		V
FG amplifier						
Upper side output saturation voltage	Vsatu (SH)		11.8			V
Lower side output saturation voltage	Vsatd (SH)				0.3	V
Hysteresis	Vhys			23		mV
TSD operating temperature	T-TSD	Design target value*		170		°C

Note * : Items shown to be design target values in the conditions column are not measured.

Package Dimensions

unit : mm (typ)

3315

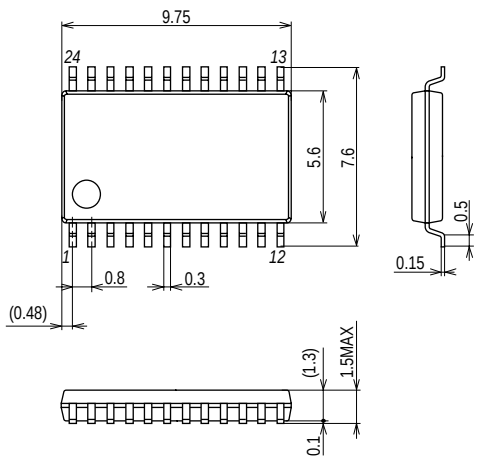

SSOP24J(275mil)

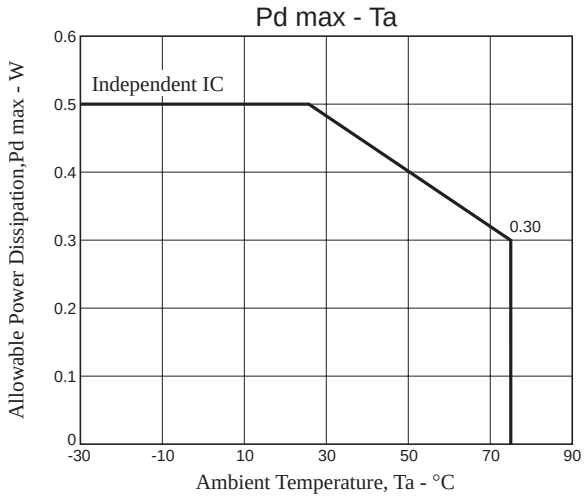

Pin Assignment

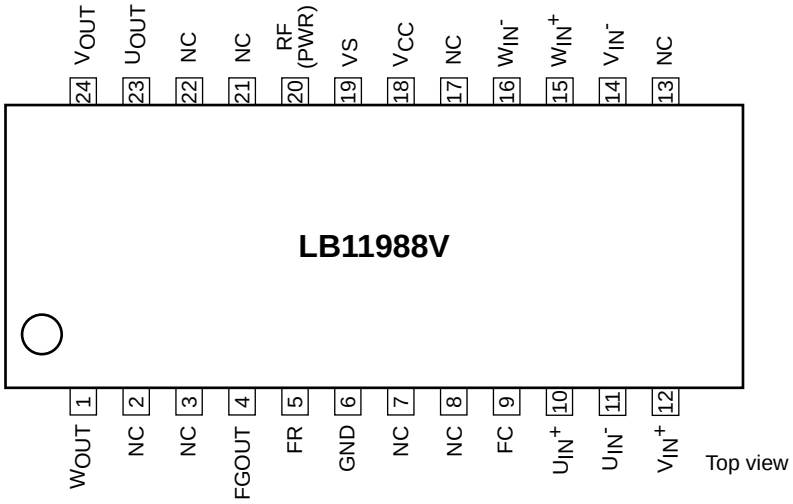

Truth Table and Control Functions

	Source→Sink	Hall input			FR
		U	V	W	
1	V → W	H	H	L	H
	W → V				L
2	U → W	H	L	L	H
	W → U				L
3	U → V	H	L	H	H
	V → U				L
4	W → V	L	L	H	H
	V → W				L
5	W → U	L	H	H	H
	U → W				L
6	V → U	L	H	L	H
	U → V				L

Note : The “H” state for FR is defined as a voltage of 8V or higher, and the “L” state for FR is defined as a voltage of 4V or lower. (When V_{CC} = 12V.)

Note : For the Hall inputs, the input high state is defined to be the state where the (+) input is higher than the corresponding (-) input by 0.01V or higher, and the input low state is defined to be the state where the (+) input is lower than the corresponding (-) input by 0.01V or higher.

Note : Since this drive technique is a 180° current application scheme, the phases other than the sink and the source phases will not turn off.

Block Diagram

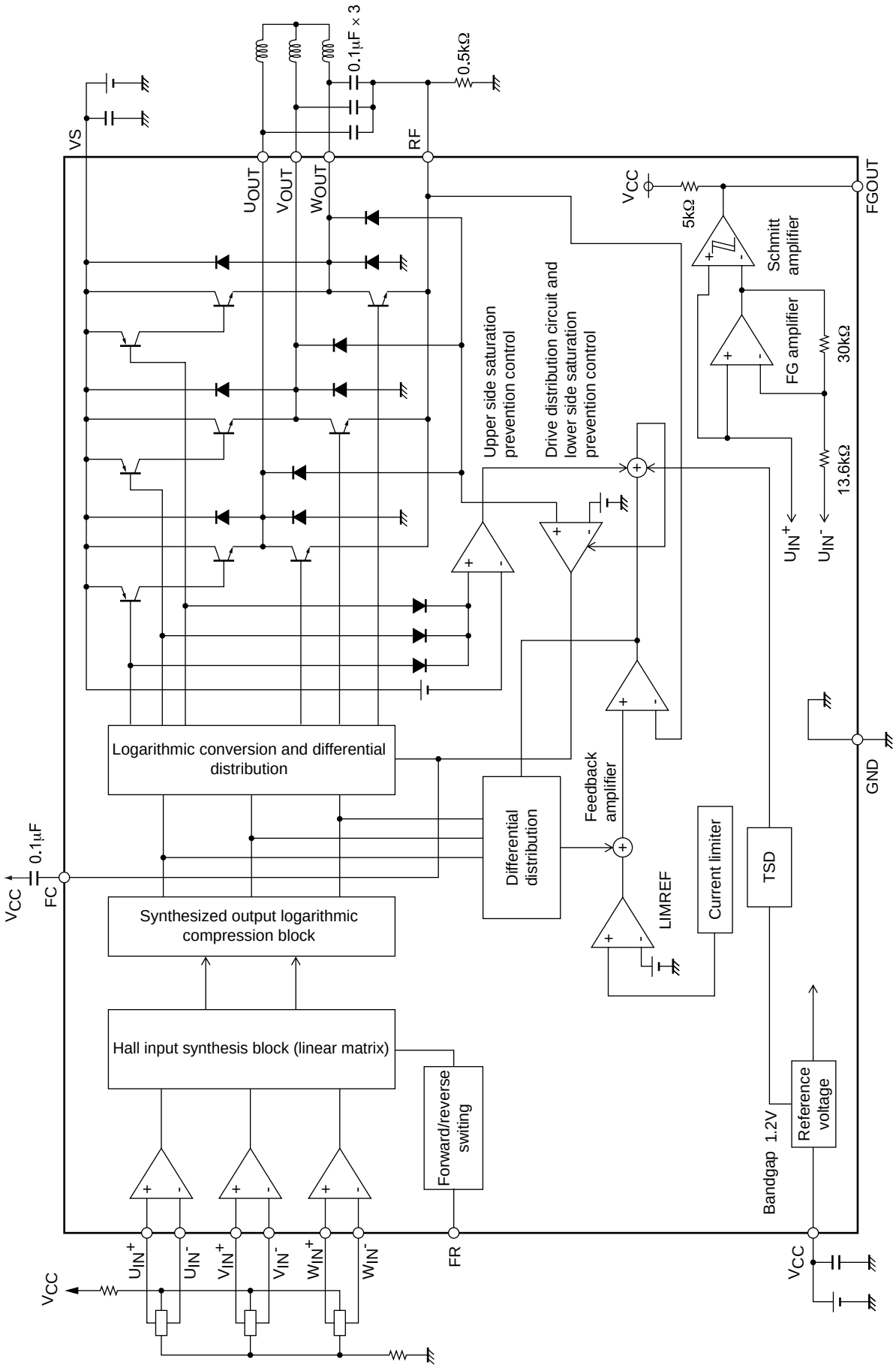

Equivalent Circuit

Pin name	Equivalent circuit
U_{IN}^{+} U_{IN}^{-} V_{IN}^{+} V_{IN}^{-} W_{IN}^{+} W_{IN}^{-}	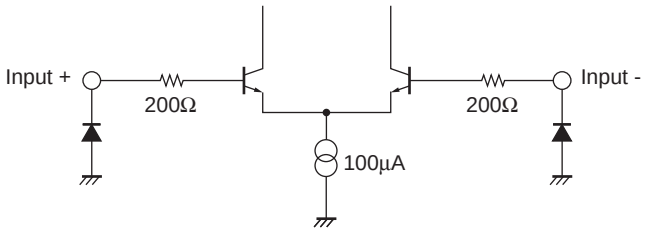
U_{OUT} V_{OUT} W_{OUT} RF V_S	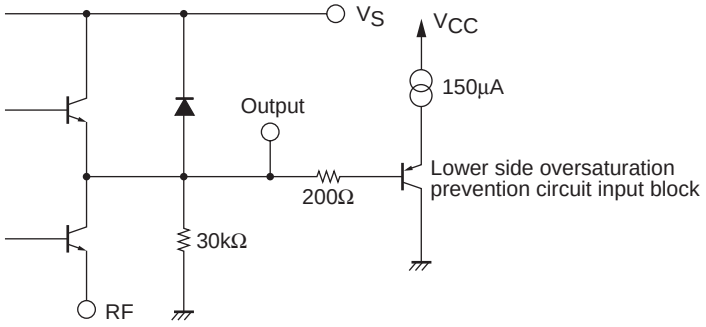
FR	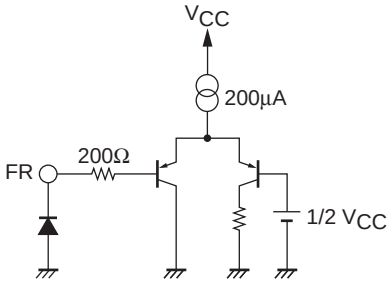
FC	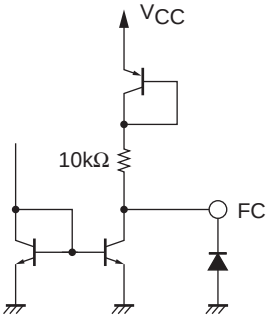
FGOUT	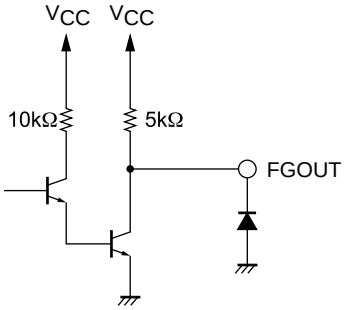

Pin Functions

Pin No.	Pin name	Function
6	GND	Ground for circuits other than the output transistors. Note that the Rf pin will be at the lowest potential of the output transistors.
3	FGOUT	This is the FG amplifier output pin. Internally, it is a resistive load. (Pull up)
5	FR	Forward/reverse switching pin
9	FC	Corrects the frequency characteristics of the saturation prevention circuit loop and current limiter circuit.
10, 11 12, 14 15, 16	U_{IN}^+, U_{IN}^- V_{IN}^+, V_{IN}^- W_{IN}^+, W_{IN}^-	U-phase Hall input. Logic high refers to the state where $IN^+ > IN^-$. V-phase Hall input. Logic high refers to the state where $IN^+ > IN^-$. W-phase Hall input. Logic high refers to the state where $IN^+ > IN^-$.
18	V_{CC}	Power supply provided to all IC internal circuits other than the output block. This voltage must be stabilized so that ripple and noise do not enter the IC.
19	V_S	Output block power supply
5	RF	Used for output current detection. The current limiter circuit operates using the resistor (Rf) connected between this pin and ground. Note that the lower side saturation prevention circuit operates according to the voltage that appears on this pin. Since the over-saturation level is set by this voltage, the level of the lower side saturation prevention circuit may be degraded in the large current region if the value of Rf is made extremely small.
23 24 1	U_{OUT} V_{OUT} W_{OUT}	U-phase Hall output. V-phase Hall output. W-phase Hall output. (These pins include internal spark killer diodes.)

ON Semiconductor and the ON logo are registered trademarks of Semiconductor Components Industries, LLC (SCILLC). SCILLC owns the rights to a number of patents, trademarks, copyrights, trade secrets, and other intellectual property. A listing of SCILLC's product/patent coverage may be accessed at www.onsemi.com/site/pdf/Patent-Marking.pdf. SCILLC reserves the right to make changes without further notice to any products herein. SCILLC makes no warranty, representation or guarantee regarding the suitability of its products for any particular purpose, nor does SCILLC assume any liability arising out of the application or use of any product or circuit, and specifically disclaims any and all liability, including without limitation special, consequential or incidental damages. "Typical" parameters which may be provided in SCILLC data sheets and/or specifications can and do vary in different applications and actual performance may vary over time. All operating parameters, including "Typicals" must be validated for each customer application by customer's technical experts. SCILLC does not convey any license under its patent rights nor the rights of others. SCILLC products are not designed, intended, or authorized for use as components in systems intended for surgical implant into the body, or other applications intended to support or sustain life, or for any other application in which the failure of the SCILLC product could create a situation where personal injury or death may occur. Should Buyer purchase or use SCILLC products for any such unintended or unauthorized application, Buyer shall indemnify and hold SCILLC and its officers, employees, subsidiaries, affiliates, and distributors harmless against all claims, costs, damages, and expenses, and reasonable attorney fees arising out of, directly or indirectly, any claim of personal injury or death associated with such unintended or unauthorized use, even if such claim alleges that SCILLC was negligent regarding the design or manufacture of the part. SCILLC is an Equal Opportunity/Affirmative Action Employer. This literature is subject to all applicable copyright laws and is not for resale in any manner.