1. Scope

The present specifications shall apply to a FMB-26.

2. Outline

Type	Silicon Schottky Barrier Diode
Structure	Resin Molded Flammability : UL94V-0 (Equivalent)
Applications	High Frequency Rectification

3. Absolute maximum ratings

No.	Item	Symbol	Unit	Rating	Conditions
1	Transient Peak Reverse Voltage	V_{RSM}	V	60	
2	Peak Reverse Voltage	V_{RM}	V	60	
3	Average Forward Current	$I_{F(AV)}$	A	4.0	Tc≤128°C, Sinewave
4	Peak Surge Forward Current	I_{FSM}	A	40	10msec. Half sinewave, one shot
5	I^2t Limiting Value	I^2t	A^2s	8.0	1msec≤t≤10msec
6	Junction Temperature	T_j	°C	-40~+150	
7	Storage Temperature	T_{stg}	°C	-40~+150	
8	Dielectric Strength		kV	A.C.1.0	Junction and case (1min)

4. Electrical characteristics(Ta=25°C , unless otherwise specified)

No.	Item	Symbol	Unit	Value	Conditions
1	Forward Voltage Drop	V_{F1}	V	0.58 max.	I_F=1.6A
		V_{F2}	V	0.62 max.	I_F=2.0A
2	Reverse Leakage Current	I_R	mA	2.0 max.	$V_R=V_{RM}$
3	Reverse Leakage Current Under High Temperature	$H \cdot I_{R1}$	mA	20 max.	$V_R=V_{RM}$, T_j=125°C
		$H \cdot I_{R2}$	mA	70 max.	$V_R=V_{RM}$, T_j=150°C
4	Thermal Resistance	$R_{th(j-c)}$	°C /W	4.0 max.	Between Junction and case

No.1,2,&3 show characteristics per one chip.

Not Recommended for New Designs

5. Characteristics

$I_{F(AV)}$ - P_F

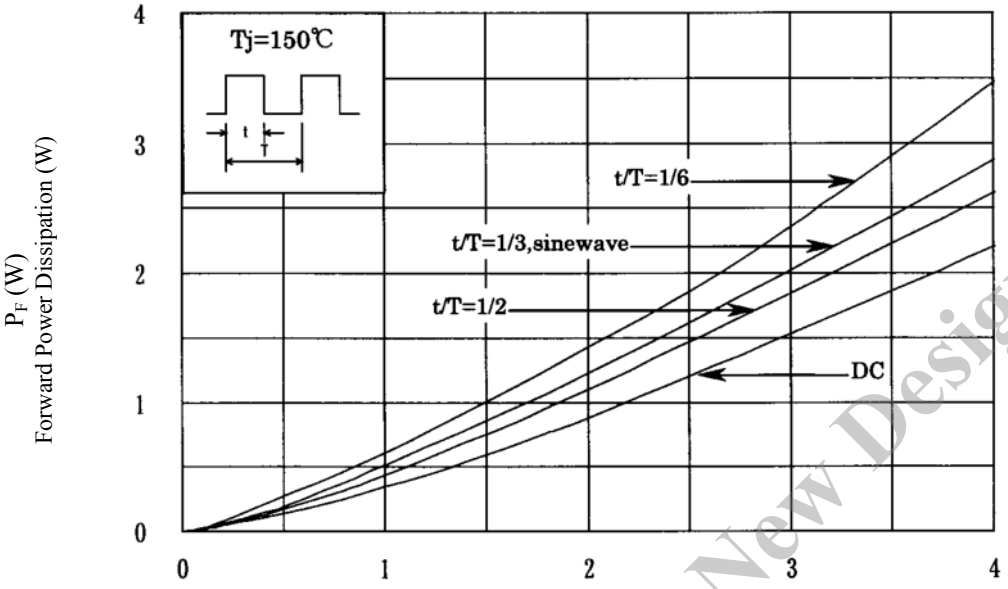

V_R - P_R

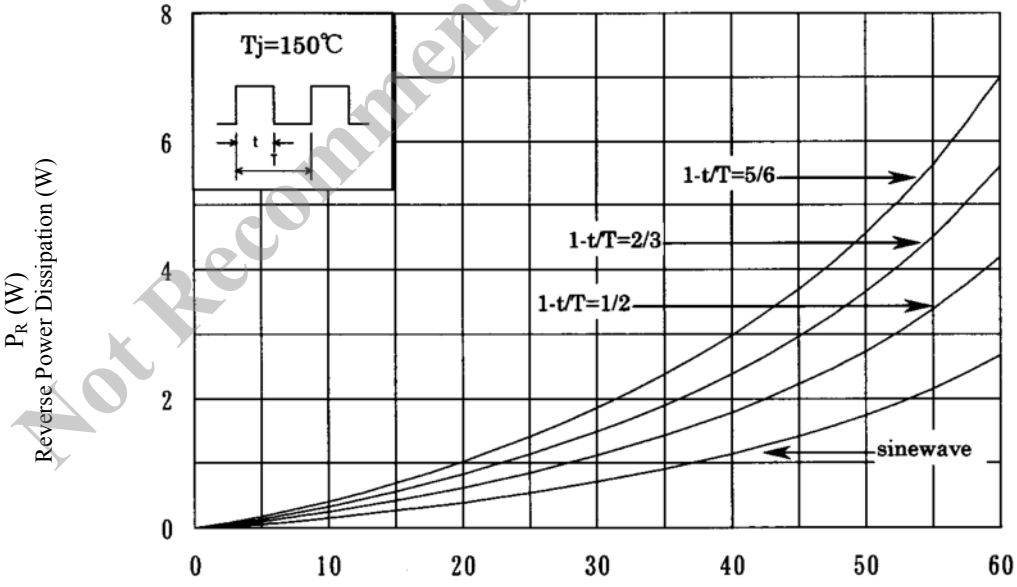

Not Recommended for New Designs

6. Derating

Tc - $I_{F(AV)}$ V_R=60(V)

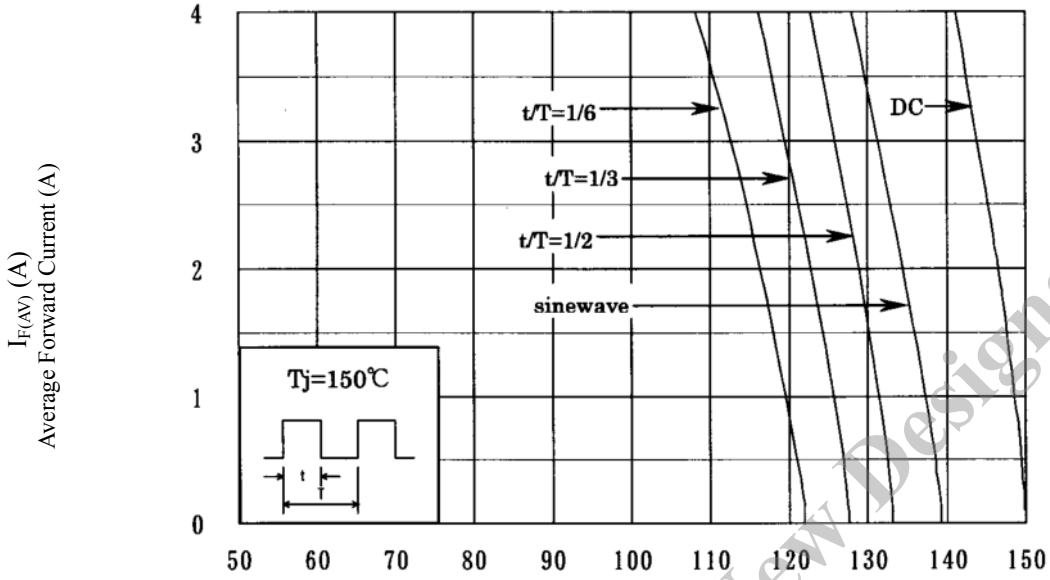

Not Recommended for New Designs

7. Package information

7-1 Package type, physical dimensions and material

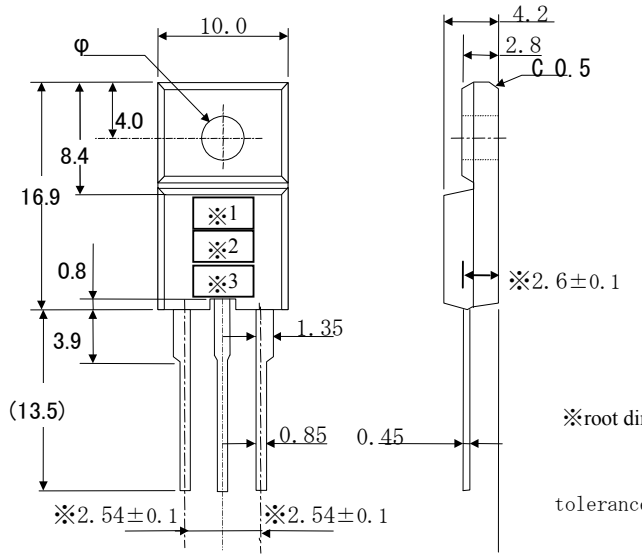

7-2 Appearance

The body shall be clean and shall not bear any stain, rust or flaw.

7-3 Marking

Type Name	Marking		
	*1 Type Name	*2 Polarity	*3 Lot number
FMB-26	FMB 26	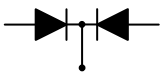	1st letter: Last digit of year 2nd letter: Month From 1 to 9 for Jan. to Sep., O for Oct., N for Nov., D for Dec. 3rd & 4th letter: Day ex. 4128 (Jan. 28, 2004)

Not Recommended for New Designs