1. Scope

The present specifications shall apply to an FMB-29L.

2. Outline

Type	Silicon Schottky Barrier Diode
Structure	Resin Molded
Applications	High Frequency Rectification

3. Flammability

UL94V-0(Equivalent)

Not Recommended for New Designs

4. Absolute maximum ratings

No.	Item	Symbol	Unit	Rating	Conditions
1	Transient Peak Reverse Voltage	V_{RSM}	V	90	
2	Peak Reverse Voltage	V_{RM}	V	90	
3	Average Forward Current	$I_{F(AV)}$	A	8.0	Refer to Derating of 7
4	Peak Surge Forward Current	I_{FSM}	A	60	Half sinewave, one shot
5	I^2t Limiting Value	I^2t	A^2s	18	1msec≤ t≤ 10msec
6	Junction Temperature	T_j	°C	-40 ~ +150	
7	Storage Temperature	T_{stg}	°C	-40 ~ +150	

No.1,2,4&5 show ratings per one chip.

5. Electrical characteristics (Ta=25°C ，unless otherwise specified)

No.	Item	Symbol	Unit	Value	Conditions
1	Forward Voltage Drop	V_F	V	0.81 max.	I_F=4.0A
2	Reverse Leakage Current	I_R	mA	5.0 max.	$V_R=V_{RM}$
3	Reverse Leakage Current Under High Temperature	H･I_{R1}	mA	35 max.	$V_R=V_{RM}$, T_j=125°C
		H･I_{R2}	mA	125 max.	$V_R=V_{RM}$, T_j=150°C
4	Thermal Resistance	$R_{th(j-c)}$	°C/W	4.0 max.	Between Junction and case

No.1,2,&3 show characteristics per one chip.

Not Recommended for New Designs

6. Characteristics

$I_{F(AV)}$ - P_F

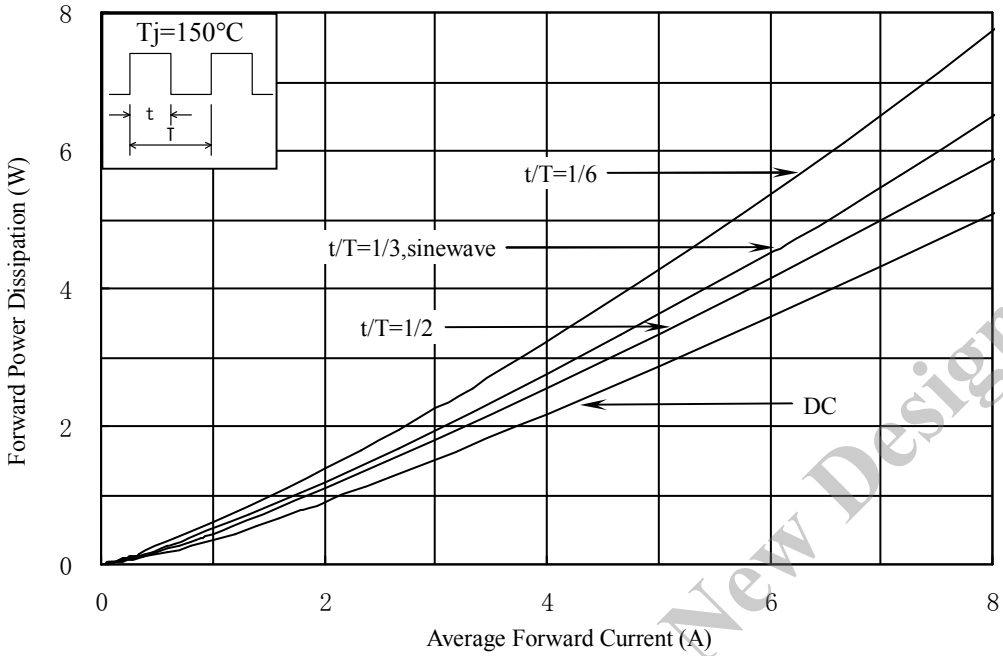

V_R - P_R

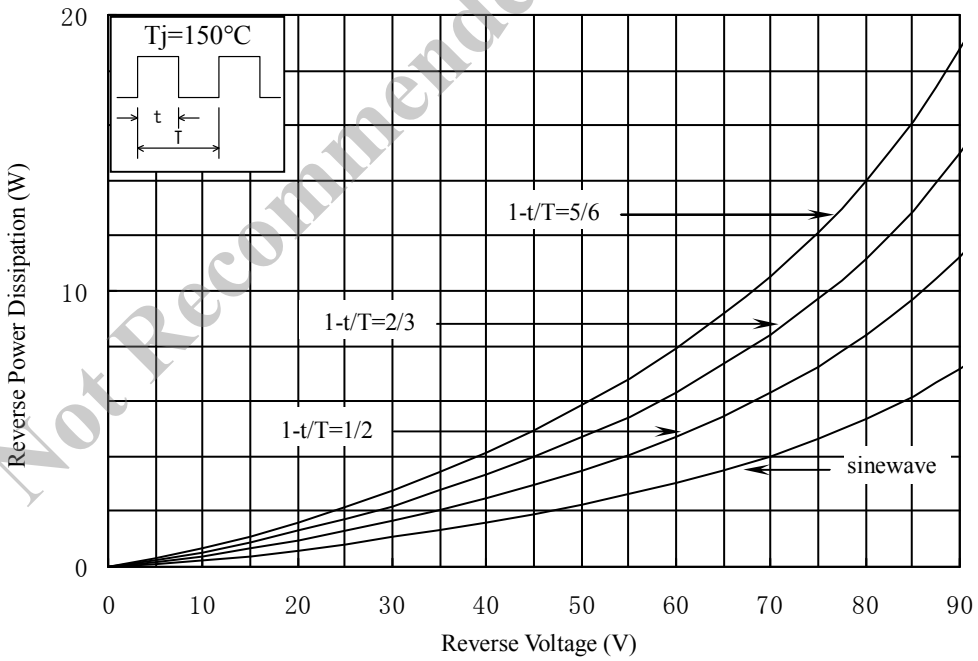

Not Recommended for New Designs

7. Derating

Tc - $I_{F(AV)}$ V_R=0(V)

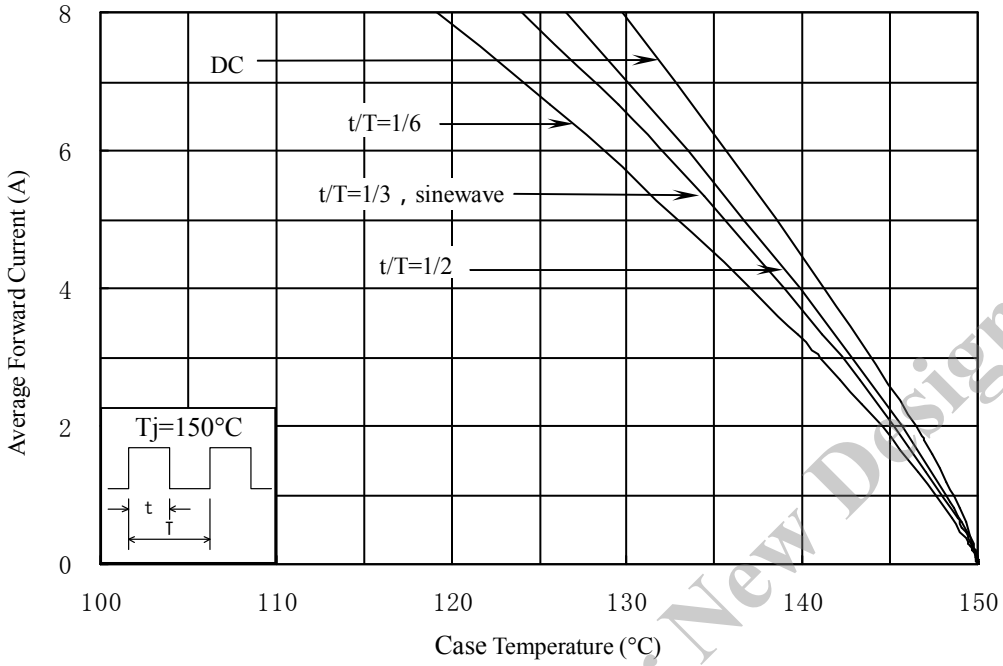

Tc - $I_{F(AV)}$ V_R=90(V)

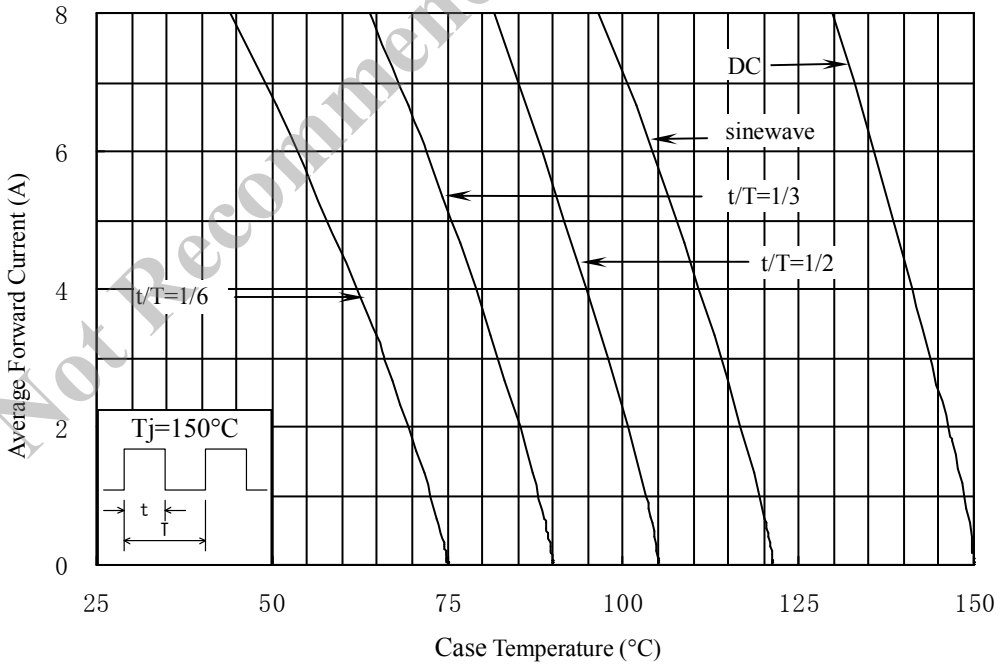

Not Recommended for New Designs

8. Package information

8-1Package type, physical dimensions and material

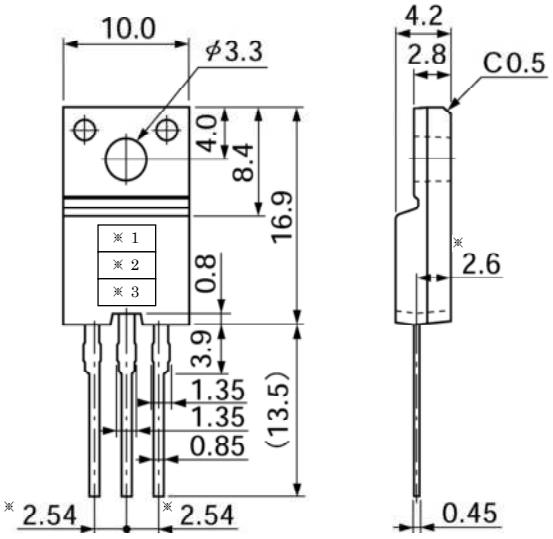

＊：root dimension

tolerance ±0.2 Dimensions in mm

8-2Appearance

The body shall be clean and shall not bear any stain, rust or flaw.

8-3Marking

Type Name	Marking		
	＊1 Type Name	＊2 Polarity	＊3 Lot number
FMB-29L	FMB29L		1st letter: Last digit of year 2nd letter: Month From 1 to 9 for Jan. to Sep., O for Oct., N for Nov., D for Dec. 3rd & 4th letter: Day ex. 4917 (Sep. 17, 2004)

Not Recommended for New Designs