1 Scope

The present specifications shall apply to Sanken silicon diode, FMM-26S/R.

2 Outline

Type	Silicon Diode
Structure	Resin Molded
Applications	Commercial Frequency Rectification

3 Flammability

L94V-0(Equivalent)

4 Absolute maximum ratings

No.	Item	Symbol	Unit	Rating	Conditions
1	Transient Peak Reverse Voltage	V_{RSM}	V	650	
2	Peak Reverse Voltage	V_{RM}	V	600	
3	Average Forward Current	$I_{F(AV)}$	A	10	Tl=98°C, Sinewave
4	Peak Surge Forward Current	I_{FSM}	A	100	10ms. Half sine wave, one shot
5	I^2t Limiting Value	I^2t	A^2s	50	
6	Junction Temperature	T_j	°C	-40 to +150	
7	Storage Temperature	T_{stg}	°C	-40 to +150	
8	Screwing Torque		N·m	0.59	
9	Dielectric Strength		kV	A.C. 1.0	Between lead and case (1 min.)

No.1, 2, 4 and 5 show ratings per one chip.

5 Electrical characteristics (Ta=25°C, unless otherwise specified)

No.	Item	Symbol	Unit	Value	Conditions
1	Forward Voltage Drop	V_F	V	1.1 max.	I_F=5.0A
2	Reverse Leakage Current	I_R	μA	10 max.	$V_R=V_{RM}$
3	Reverse Leakage Current Under High Temperature	H·I_R	μA	100 max.	$V_R=V_{RM}$, T_j=150°C
4	Thermal Resistance	$R_{th(j-c)}$	°C /W	4.0 max.	Between Junction and case

No.1, 2 and 3 show characteristics per one chip.

Not Recommended for New Designs

6 Characteristics

IF(AV) - PF Characteristics

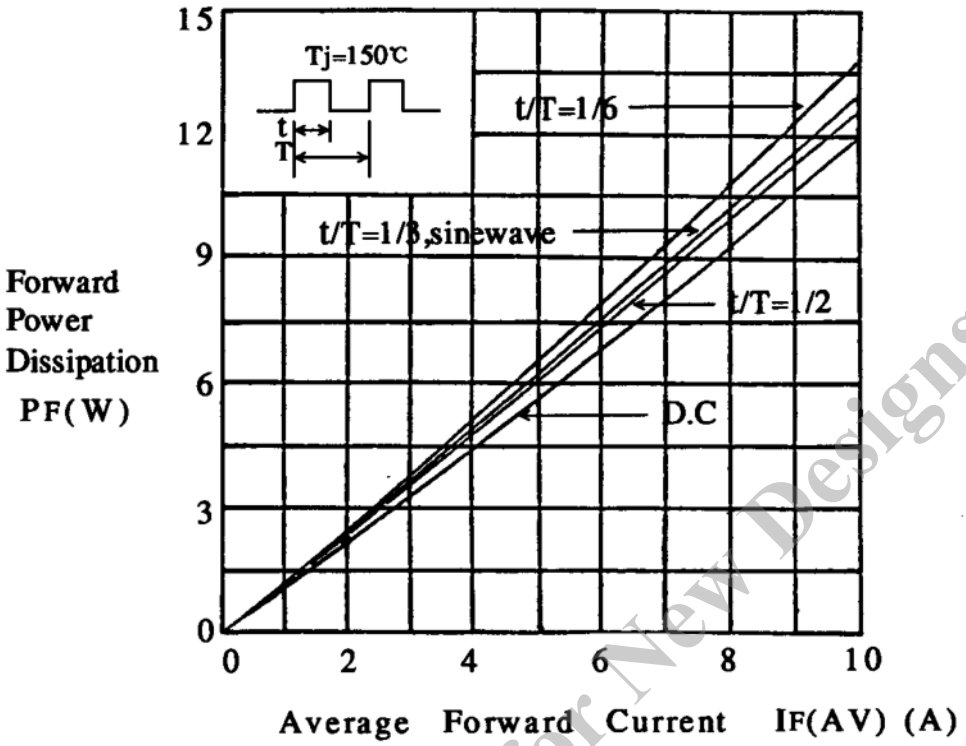

IF(AV) - Tl Characteristics

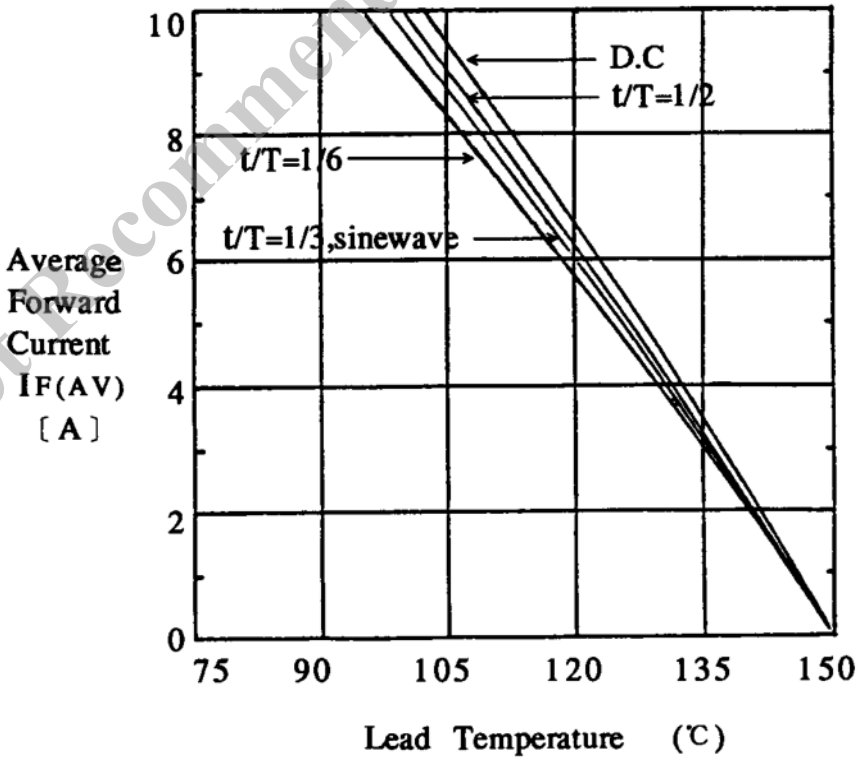

Not Recommended for New Designs

7 Package information

7 - 1 Package type, physical dimensions and material

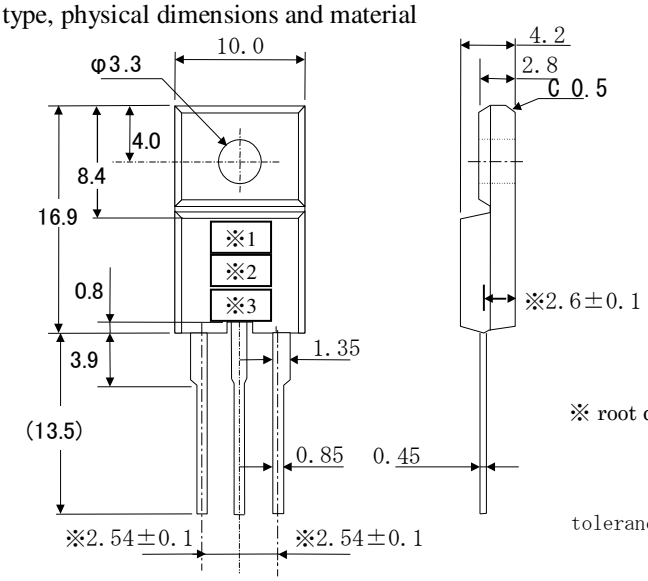

Dimensions in mm

7 - 2 Appearance

The body shall be clean and shall not bear any stain, rust or flaw.

7 - 3 Marking

Type Name	Marking		
	*1 is type name	*2 is polarity	*3 is lot number
FMM-26S FMM-26R	FMM26S FMM26R	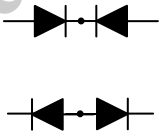	1st letter: Last digit of year 2nd letter: Month From 1 to 9 for Jan. to Sep., O for Oct., N for Nov., D for Dec. 3rd & 4th letter: Day ex. 2117 (Jan. 17, 2002)

Not Recommended for New Designs