1 Scope

The present specifications shall apply to FMU-26S/R.

2 Outline

Type	Silicon Diode
Structure	Resin Molded
Applications	High Frequency Rectification

3 Flammability

UL94V-0(Equivalent)

4 Absolute maximum ratings

No.	Item	Symbol	Unit	Rating	Conditions
1	Transient Peak Reverse Voltage	V_{RSM}	V	650	
2	Peak Reverse Voltage	V_{RM}	V	600	
3	Average Forward Current	$I_{F(AV)}$	A	10	Refer to derating curve in Section 7
4	Peak Surge Forward Current	I_{FSM}	A	40	10ms. Half sine wave, one shot
5	I^2t Limiting Value	I^2t	A^2s	8.0	1 ms ≤ t ≤ 10 ms
6	Junction Temperature	T_j	°C	-40 to +150	
7	Storage Temperature	T_{stg}	°C	-40 to +150	

No.1, 2, 4 and 5 show ratings per one chip.

5 Electrical characteristics (Ta=25°C, unless otherwise specified)

No.	Item	ymbol	Unit	Value	Conditions
1	Forward Voltage Drop	V_F	V	1.5 max.	I_F=5.0A
2	Reverse Leakage Current	I_R	μA	50 max.	$V_R=V_{RM}$
3	Reverse Leakage Current Under High Temperature	H･I_R1	μA	500 max.	$V_R=V_{RM}$, T_j=100°C
		H･I_R2	mA	3.0 max.	$V_R=V_{RM}$, T_j=150°C
4	Reverse Recovery Time	trr1	nS	400 max.	$I_F=I_{RP}$=100mA 90% Recovery point, T_j=25°C
		trr2	nS	180 max.	I_F=100mA,I_{RP}=200mA 75% Recovery point ,T_j=25°C
5	Forward Voltage Drop	$R_{th(j-c)}$	°C /W	4.0 max.	Between Junction and case

No.1, 2, 3 and 4 show characteristics per one chip.

Not Recommended for New Designs

6 Characteristics

$I_{F(AV)}$ – P_F

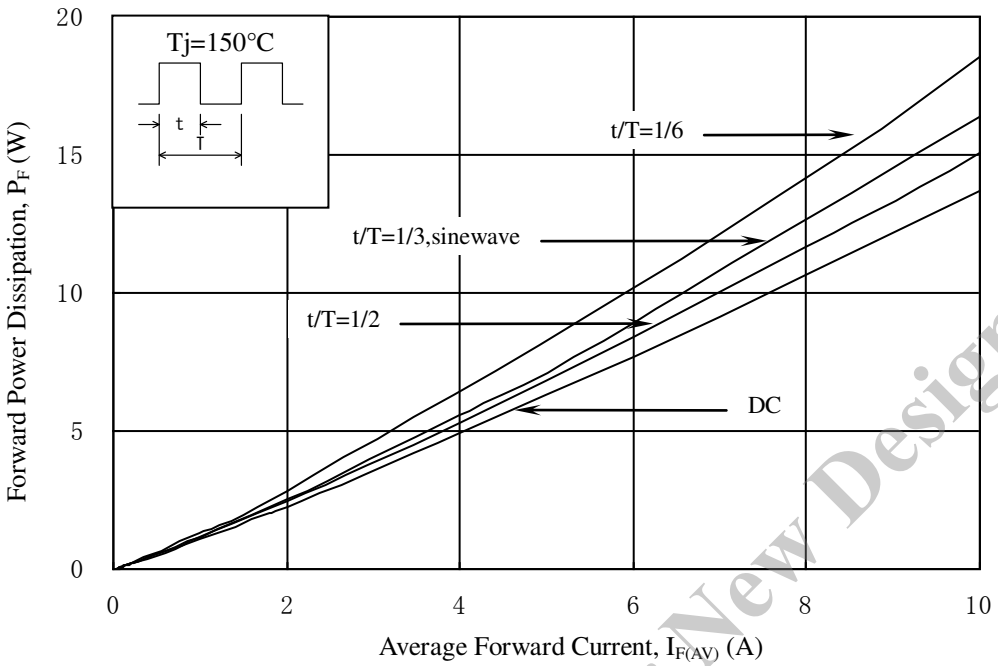

V_R – P_R

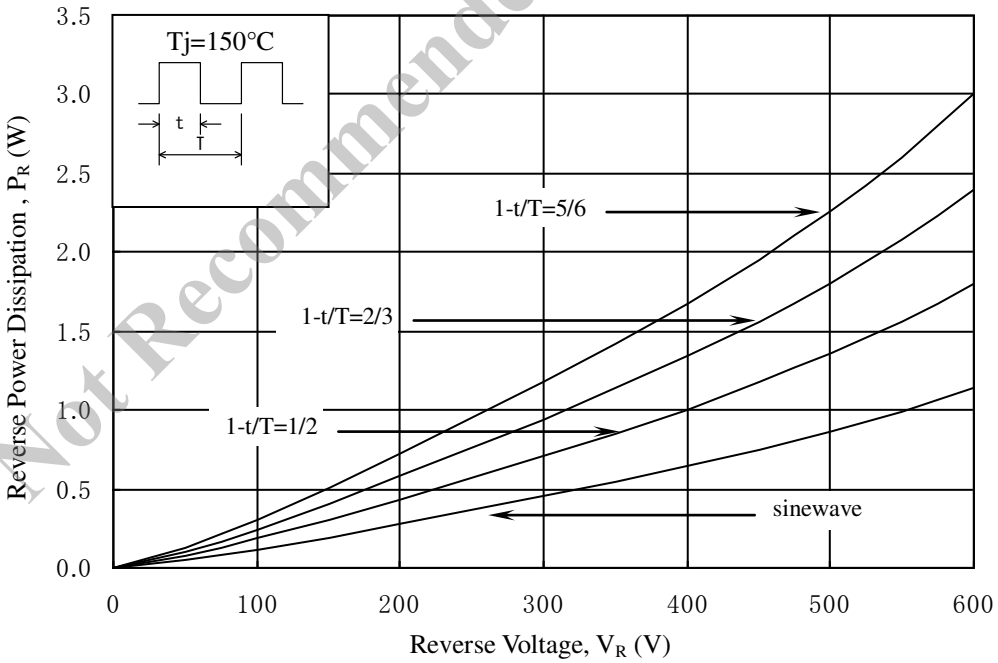

Not Recommended for New Designs

7 Derating

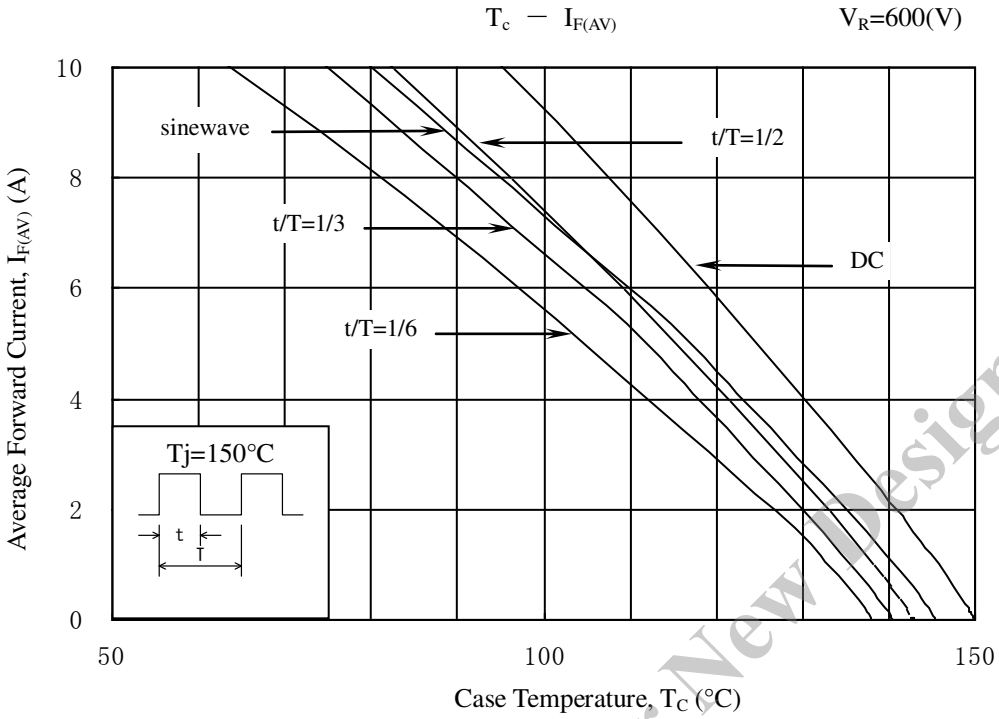

Not Recommended for New Designs

8 Package information

8-1 Package type, physical dimensions and material

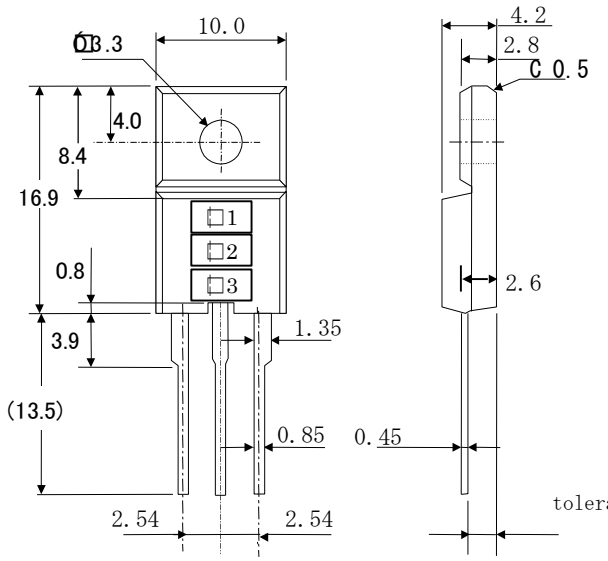

Dimensions in mm

8-2Appearance

The body shall be clean and shall not bear any stain, rust or flaw.

8-3 Marking

Type Name	Marking		
	*1 is type name	*2 is polarity	*3 is lot number
FMU-26S	FMU26S	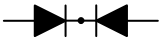	1st letter: Last digit of year 2nd letter: Month From 1 to 9 for Jan. to Sep., O for Oct., N for Nov., D for Dec. 3rd & 4th letter: Day ex. 2117 (Jan. 17, 2002)
FMU-26R	FMU26R	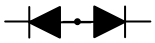	

Not Recommended for New Designs