EMI FSG

FABRIC SHIELDING GASKETS

LEADER TECH
a HEICO company

High-Performance EMI Fabric Shielding Gaskets

EMI Shielding Gaskets for Electronic Enclosures

Typical EMI Fabric Shielding Gasket electronic enclosure installation.

Shielding gaskets are, very simply, connectors of two opposing metallic planes which make them appear as one continuous surface, by connecting across the openings. Depending on the frequencies involved, the openings must be reduced as closely as possible to a continuous seal.

Leader Tech's unique Fabric Shielding Gasket structure is a combination of a highly conductive nickel/copper ripstop fabric and a resilient polyurethane foam core. Leader Tech's FSG products have superior shielding properties and ensure long performance life all in a cost effective manner.

Benefits of Fabric Shielding Gaskets (FSG)

Fabric Shielding Gaskets assure tight EMI electrical contact sealing of electronic enclosures with high speed microprocessors.

- Excellent shielding effectiveness
- Extremely low compression force allows for use of lighter materials and less fastening and hinge hardware
- Low Surface Resistivity provides excellent conductivity
- Abrasion resistant metalized fabric for durable performance
- Low compression set ensures long term reliability of gasket performance
- Profile and I/O gaskets are available with PSA tapes which facilitates quick assembly
- Designed for use with non-conductive pressure sensitive adhesive for better adhesion
- FSG products can be ordered from 24" or 48" stock, cut to specific lengths or kiss cut on release liner
- Over 100 sizes to choose from in a variety of profiles
- Many profiles can be mitered and bonded as a frame gasket
- Prototype samples can be provided within 24 hours

Table of Contents

Rectangle Shape 4-5
D-Shape 6-7
Square Shape 8
C-Fold Shape 9
Bell Shape 10
Knife Shape 11
P-Shape 12
Round Shape 13
T-Shape 13
Oval Shape 14
Triangle Shape 14
D-Sub Miniature 15
I/O Back Panel Profiles 16
Shielding Fabrics 17
Fabric Shielding Tape 17
Compression and Performance Data 18
Technical Data 19

EMI FSG
FABRIC SHIELDING GASKETS

LEADER TECH SATISFYING OUR CUSTOMERS BY SCORE OPTIMIZING OUR RESOURCES EVERYDAY QUALITY POLICY

ISO9001:2008 CERTIFIED

RoHS COMPLIANT

Rectangle Shape
Fabric Shielding Gaskets

Shielding Effectiveness
Up to 105 dB

Test Frequencies
30MHz - 10GHz

Low Compression
See page 18 for typical performance

Dura-Layer Construction
Resiliant base with high-performance fabric

Recommended Compression
30-50% of gasket height

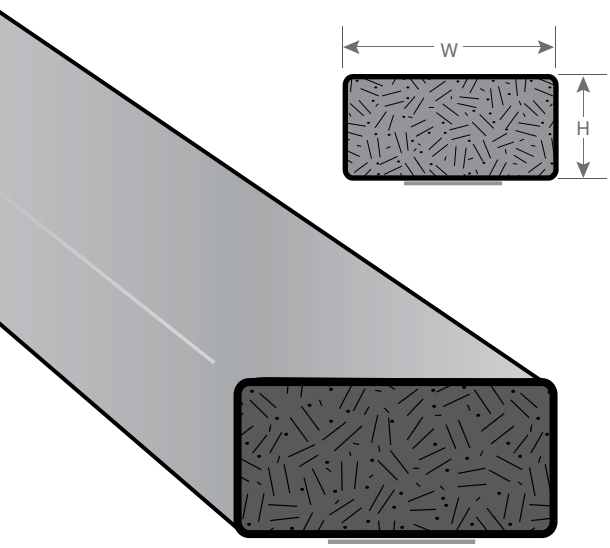

RECTANGLE SHAPE
with pressure sensitive adhesive mounting.

Low profiles with low compression force for applications with small gaps and larger profiles for applications on cabinets and large enclosures.

Larger profiles are commonly used in groove mounted applications.

Available in standard 24" and 48" lengths or cut to length as desired.

Conductive tape and products without tape can also be supplied. Contact factory for ordering information.

Please consult factory for sizes not shown.

See page 5 for part number explanation and typical cross section and length tolerances.

Part	H (in)	(mm)	W (in)	(mm)
SG015200R	0.015	0.38	0.200	5.08
SG020157R	0.020	0.51	0.157	3.99
SG020197R	0.020	0.51	0.197	5.00
SG020275R	0.020	0.51	0.275	6.99
SG039118R	0.039	0.99	0.118	3.00
SG040125R	0.040	1.02	0.125	3.18
SG040200R	0.040	1.02	0.200	5.08
SG040275R	0.040	1.02	0.275	6.99
SG040395R	0.040	1.02	0.395	10.03
SG040500R	0.040	1.02	0.500	12.70
SG040600R	0.040	1.02	0.600	15.24
SG040710R	0.040	1.02	0.710	18.03
SG050090R	0.050	1.27	0.090	2.29
SG060125R	0.060	1.52	0.125	3.18

Continued on page 5.

Rectangle Shape
Fabric Shielding Gaskets

Part	H (in)	(mm)	W (in)	(mm)
SG060160R	0.060	1.52	0.160	4.06
SG060200R	0.060	1.52	0.200	5.08
SG060280R	0.060	1.52	0.280	7.11
SG060395R	0.060	1.52	0.395	10.03
SG060550R	0.060	1.52	0.550	13.97
SG060750R	0.060	1.52	0.750	19.05
SG079157R	0.079	2.00	0.157	3.99
SG080200R	0.080	2.03	0.200	5.08
SG080275R	0.080	2.03	0.275	6.99
SG080395R	0.080	2.03	0.395	10.03
SG080500R	0.080	2.03	0.500	12.70
SG080750R	0.080	2.03	0.750	19.05
SG100200R	0.100	2.54	0.200	5.08
SG120155R	0.120	3.05	0.155	3.94
SG125250R	0.125	3.18	0.250	6.35
SG125375R	0.125	3.18	0.375	9.53
SG160354R	0.160	4.06	0.354	8.99
SG187375R	0.187	4.75	0.375	9.53
SG187750R	0.187	4.75	0.750	19.05
SG250375R	0.250	6.35	0.375	9.53
SG250500R	0.250	6.35	0.500	12.70
SG250600R	0.250	6.35	0.600	15.24
SG375500R	0.375	9.53	0.500	12.70

TYPICAL CROSS SECTION TOLERANCES

±.010 in.	(0.25 mm)	for all dimensions up to	0.04 in.	(1.02 mm)
±.020 in.	(0.50 mm)	for all dimensions above	0.04 in.	(1.02 mm)

Detailed part drawings are available upon request.

TYPICAL LENGTH TOLERANCES

0.20 to 6.00 in.	(5 - 152 mm)	±.03 in.	(0.76 mm)
6.01 to 18.00 in.	(153 - 457 mm)	±.06 in.	(1.52 mm)
18.01 to 48.00 in.	(458 - 1219 mm)	±.08 in.	(2.03 mm)

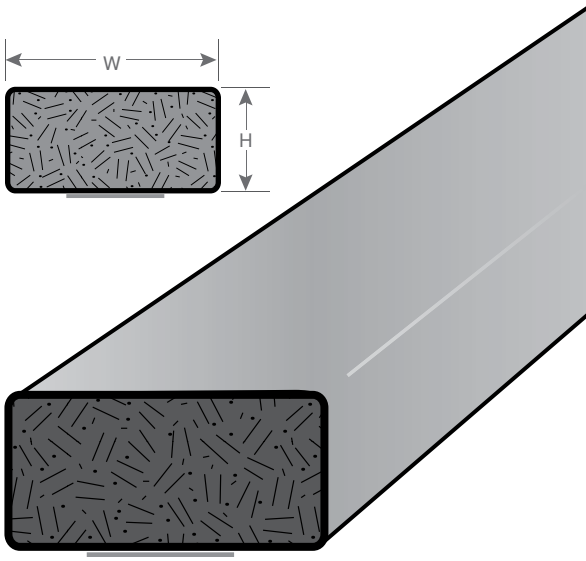

Part Number Explanation

SG	XXX	XXX	X	-	XX.XX
# start	Height	Width	Profile		Length

*Example:
SG125250R-22.50: Gasket .125 tall, .250 wide, Rectangle Shape and 22.5" long

D-Shape
Fabric Shielding Gaskets

Shielding Effectiveness
Up to 105 dB

Test Frequencies
30MHz - 10GHz

Low Compression
See page 18 for typical performance

Dura-Layer Construction
Resiliant base with high-performance fabric

Recommended Compression
30-50% of gasket height

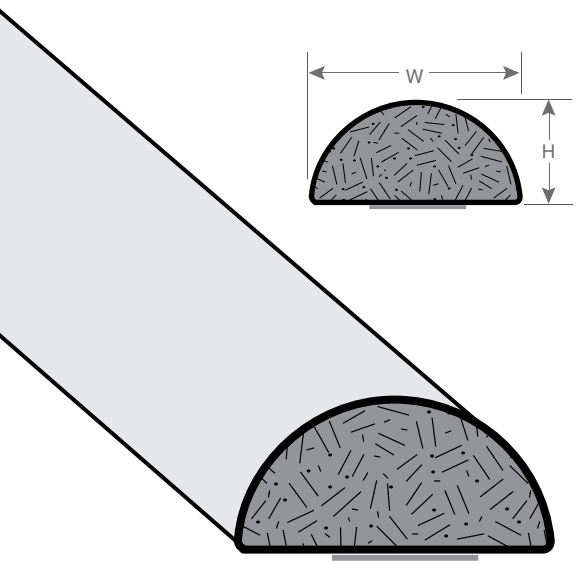

D-SHAPE
with pressure sensitive adhesive mounting.

Universally functional for most applications - our most popular style.

The D Shape allows omni-directional compression loading from any angle.

Cross-sectional profile is scaled for optimum compression/contact resistance properties.

Larger profiles are commonly used in groove mounted applications.

Available in standard 24" and 48" lengths or cut to length as desired.

Conductive tape and products without tape can also be supplied. Contact factory for ordering information.

Please consult factory for sizes not shown.

See page 7 for part number explanation and typical cross section and length tolerances.

Part	H (in)	(mm)	W (in)	(mm)
SG040150D	0.040	1.02	0.150	3.81
SG050140D	0.050	1.27	0.140	3.56
SG050250D	0.050	1.27	0.250	6.35
SG060125D	0.060	1.52	0.125	3.18
SG060150D	0.060	1.52	0.150	3.81
SG070135D	0.070	1.78	0.135	3.43
SG070180D	0.070	1.78	0.180	4.57
SG080080D	0.080	2.03	0.080	2.03
SG080160D	0.080	2.03	0.160	4.06
SG080394D	0.080	2.03	0.394	10.01
SG090090D	0.090	2.29	0.090	2.29
SG090150D	0.090	2.29	0.150	3.81

Continued on page 7.

D-Shape
Fabric Shielding Gaskets

Part	H (in)	(mm)	W (in)	(mm)
SG100300D	0.100	2.54	0.300	7.62
SG110180D	0.110	2.79	0.180	4.57
SG120150D	0.120	3.05	0.150	3.81
SG120475D	0.120	3.05	0.475	12.07
SG125187D	0.125	3.18	0.187	4.75
SG125250D	0.125	3.18	0.250	6.35
SG130190D	0.130	3.30	0.190	4.83
SG140250D	0.140	3.56	0.250	6.35
SG150250D	0.150	3.81	0.250	6.35
SG160240D	0.160	4.06	0.240	6.10
SG180400D	0.180	4.57	0.400	10.16
SG187250D	0.187	4.75	0.250	6.35
SG195260D	0.195	4.95	0.260	6.60
SG236236D	0.236	5.99	0.236	5.99
SG250375D	0.250	6.35	0.375	9.53
SG295355D	0.295	7.49	0.355	9.02
SG315630D	0.315	8.00	0.630	16.00
SG375500D	0.375	9.53	0.500	12.70
SG430500D	0.430	10.92	0.500	12.70
SG562709D	0.562	14.27	0.709	18.01
SG670670D	0.670	17.02	0.670	17.02

TYPICAL CROSS SECTION TOLERANCES

±.010 in.	(0.25 mm)	for all dimensions up to	0.04 in.	(1.02 mm)
±.020 in.	(0.50 mm)	for all dimensions above	0.04 in.	(1.02 mm)

Detailed part drawings are available upon request.

TYPICAL LENGTH TOLERANCES

0.20 to 6.00 in.	(5 - 152 mm)	±.03 in.	(0.76 mm)
6.01 to 18.00 in.	(153 - 457 mm)	±.06 in.	(1.52 mm)
18.01 to 48.00 in.	(458 - 1219 mm)	±.08 in.	(2.03 mm)

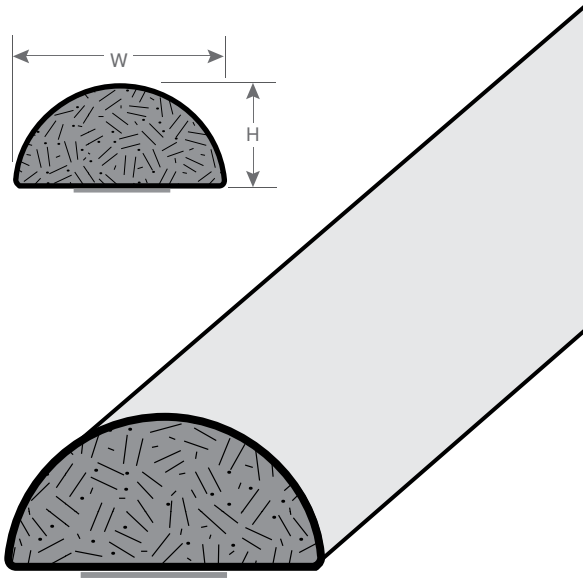

Part Number Explanation

SG	XXX	XXX	X	-	XX.XX
# start	Height	Width	Profile		Length

*Example:
SG125250D-22.50: Gasket .125 tall, .250 wide, D-Shape and 22.5" long

Square Shape
Fabric Shielding Gaskets

Shielding Effectiveness
Up to 105 dB

Test Frequencies
30MHz - 10GHz

Low Compression
See page 18 for typical performance

Dura-Layer Construction
Resiliant base with high-performance fabric

Recommended Compression
30-50% of gasket height

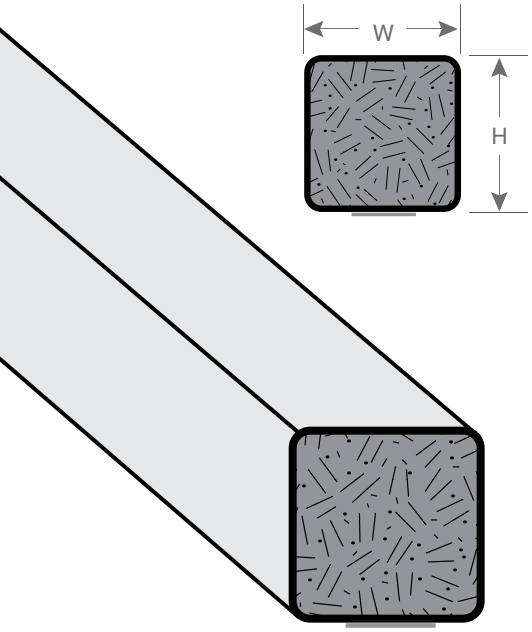

SQUARE SHAPE
with pressure sensitive adhesive mounting.

Low profiles with low compression force for applications with small gaps and larger profiles for applications on cabinets and large enclosures.

Larger profiles are commonly used in groove mounted applications.

Available in standard 24" and 48" lengths or cut to length as desired.

Conductive tape and products without tape can also be supplied. Contact factory for ordering information.

Please consult factory for sizes not shown.

See below for part number explanation.

See page 19 for typical cross section and length tolerances.

Part	H (in)	(mm)	W (in)	(mm)
SG080080S	0.080	2.03	0.080	2.03
SG118118S	0.118	3.00	0.118	3.00
SG160160S	0.160	4.06	0.160	4.06
SG200200S	0.200	5.08	0.200	5.08
SG250250S	0.250	6.35	0.250	6.35
SG375375S	0.375	9.53	0.375	9.53
SG500500S	0.500	12.70	0.500	12.70
SG670670S	0.670	17.02	0.670	17.02
SG787787S	0.787	19.99	0.787	19.99

Part Number Explanation

SG	XXX	XXX	X	-	XX.XX
# start	Height	Width	Profile		Length

*Example:
SG250250S-22.50: Gasket .250 tall, .250 wide, Square Shape and 22.5" long

C-Fold Shape
Fabric Shielding Gaskets

Shielding Effectiveness
Up to 105 dB

Test Frequencies
30MHz - 10GHz

Low Compression
See page 18 for typical performance

Dura-Layer Construction
Resiliant base with high-performance fabric

Recommended Compression
50-60% of gasket height

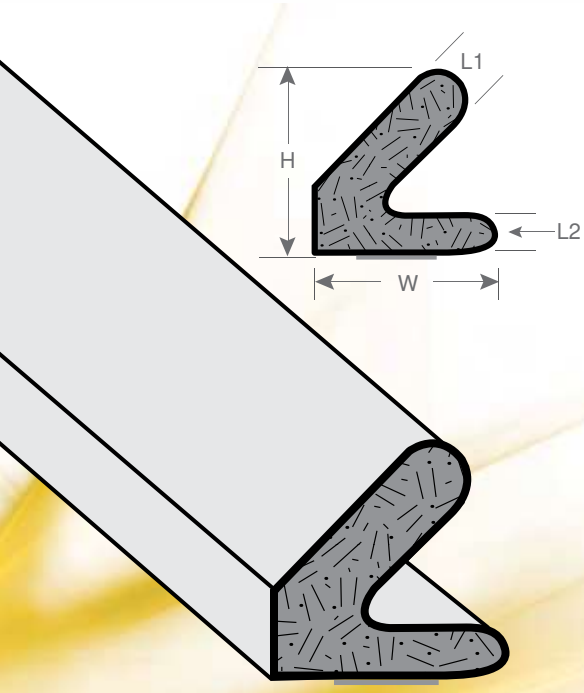

C-FOLD SHAPE
with pressure sensitive adhesive mounting.

C-Fold profiles are popular for larger gap applications where low compression force is desired.

Large profiles are ideal for cabinet and enclosure applications.

Available in standard 24" and 48" lengths or cut to length as desired.

Conductive tape and products without tape can also be supplied. Contact factory for ordering information.

Please consult factory for sizes not shown.

See below for part number explanation.

See page 19 for typical cross section and length tolerances.

Part	H (in)	(mm)	W (in)	(mm)	L1	L2
SG196325C	0.196	4.98	0.325	8.26	.120	.040
SG196535C	0.196	4.98	0.535	13.59	.100	.040
SG240415C	0.240	6.10	0.415	10.54	.100	.040
SG252280C	0.252	6.40	0.280	7.11	.100	.040
SG315315C	0.315	8.00	0.315	8.00	.125	.060
SG380420C	0.380	9.65	0.420	10.67	.115	.060
SG465420C	0.465	11.81	0.420	10.67	.120	.060
SG550590C	0.550	13.97	0.590	14.99	.120	.060
SG675600C	0.675	17.15	0.600	15.24	.120	.060

Part Number Explanation

SG	XXX	XXX	X	-	XX.XX
# start	Height	Width	Profile		Length

*Example:
SG252280C-22.50: Gasket .252 tall, .280 wide, C-Fold Shape and 22.5" long

Bell Shape
Fabric Shielding Gaskets

Shielding Effectiveness
Up to 105 dB

Test Frequencies
30MHz - 10GHz

Low Compression
See page 18 for typical performance

Dura-Layer Construction
Resiliant base with high-performance fabric

Recommended Compression
30-50% of gasket height

BELL SHAPE
with pressure sensitive adhesive mounting.

Available in standard 24" and 48" lengths or cut to length as desired.

Conductive tape and products without tape can also be supplied. Contact factory for ordering information.

Please consult factory for sizes not shown.

See below for part number explanation.

See page 19 for typical cross section and length tolerances.

Part	H (in)	(mm)	W (in)	(mm)
SG070180B	0.070	1.78	0.180	4.57
SG090315B	0.090	2.29	0.315	8.00
SG100300B	0.100	2.54	0.300	7.62
SG130256B	0.130	3.30	0.256	6.50
SG157500B	0.157	3.99	0.500	12.70
SG200500B	0.200	5.08	0.500	12.70

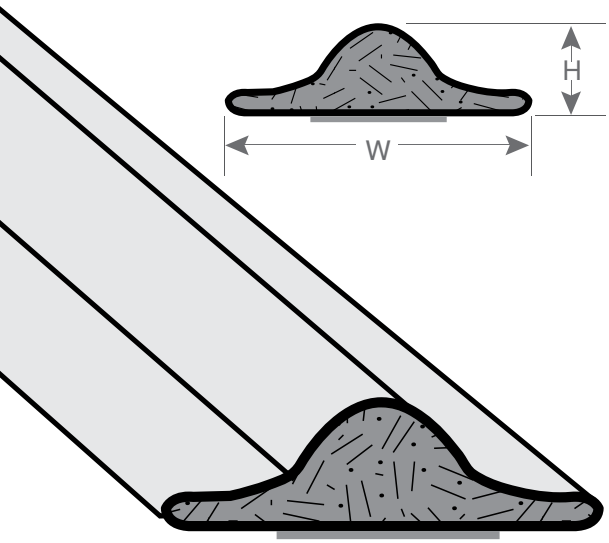

Part Number Explanation

SG	XXX	XXX	X	-	XX.XX
# start	Height	Width	Profile		Length

*Example:
SG100300B-22.50: Gasket .100 tall, .300 wide, Bell shape and 22.5" long

Knife Shape
Fabric Shielding Gaskets

Shielding Effectiveness
Up to 105 dB

Test Frequencies
30MHz - 10GHz

Low Compression
See page 18 for typical performance

Dura-Layer Construction
Resiliant base with high-performance fabric

Recommended Compression
30-50% of gasket height

KNIFE SHAPE
with pressure sensitive adhesive mounting.

Available in standard 24" and 48" lengths or cut to length as desired.

Conductive tape and products without tape can also be supplied. Contact factory for ordering information.

Please consult factory for sizes not shown.

See below for part number explanation.

See page 19 for typical cross section and length tolerances.

Part	H (in)	(mm)	W (in)	(mm)
SG070340K	0.070	1.78	0.340	8.64
SG106315K	0.106	2.69	0.315	8.00
SG106445K	0.106	2.69	0.445	11.30
SG160600K	0.160	4.06	0.600	15.24
SG250750K	0.250	6.35	0.750	19.05
SG312707K	0.312	7.92	0.707	17.96
SG350750K	0.350	8.89	0.750	19.05

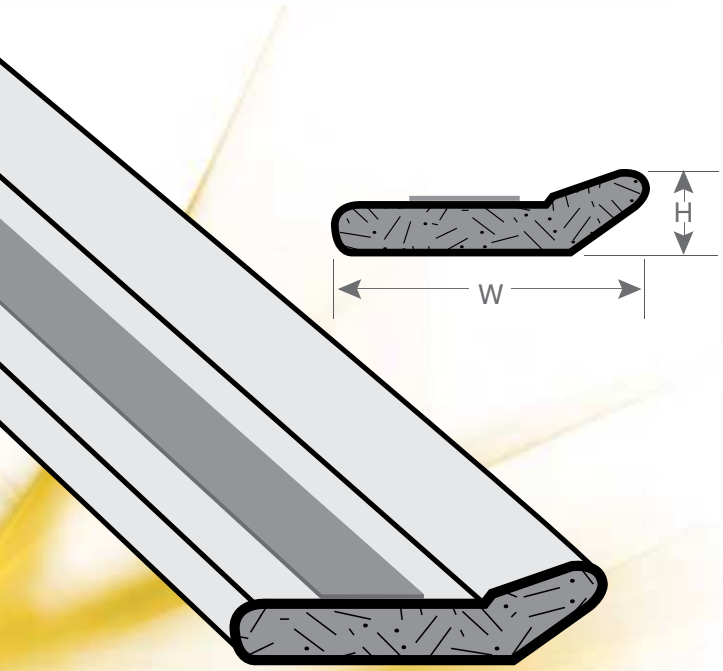

Part Number Explanation

SG	XXX	XXX	X	-	XX.XX
# start	Height	Width	Profile		Length

*Example:
SG106445K-22.50: Gasket .106 tall, .445 wide, Knife Shape and 22.5" long

P-Shape

Fabric Shielding Gaskets

Shielding Effectiveness
Up to 105 dB

Test Frequencies
30MHz - 10GHz

Low Compression
See page 18 for typical performance

Dura-Layer Construction
Resiliant base with high-performance fabric

Recommended Compression
30-50% of gasket height

P-SHAPE

with pressure sensitive adhesive mounting.

Available in standard 24" and 48" lengths or cut to length as desired.

Conductive tape and products without tape can also be supplied. Contact factory for ordering information.

Please consult factory for sizes not shown.

See below for part number explanation.

See page 19 for typical cross section and length tolerances.

Part	H (in)	(mm)	W (in)	(mm)	L1 (in)	(mm)	L (in)	(mm)
SG016195P	0.016	0.41	0.195	4.95	0.070	1.78	0.005	0.13
SG060275P	0.060	1.52	0.275	6.99	0.118	3.00	0.014	0.35
SG080200P	0.080	2.03	0.200	5.08	0.118	3.00	0.020	0.50
SG130520P	0.130	3.30	0.520	13.21	0.260	6.60	0.039	1.00
SG145520P	0.145	3.68	0.520	13.21	0.252	6.40	0.039	1.00
SG200395P	0.200	5.08	0.395	10.03	0.157	4.00	0.079	2.00
SG200475P	0.200	5.08	0.475	12.07	0.157	4.00	0.079	2.00

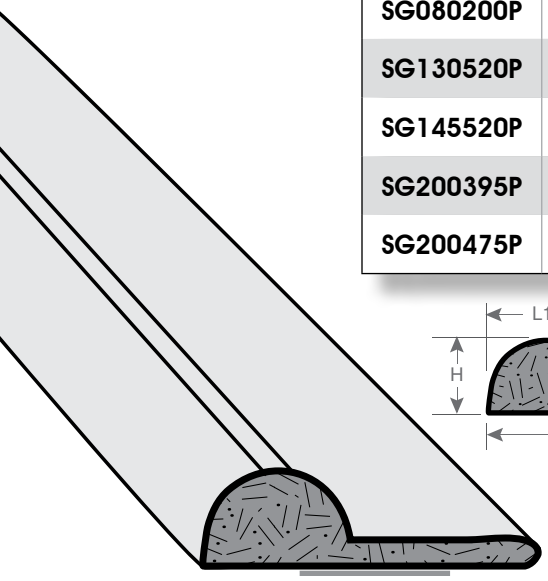

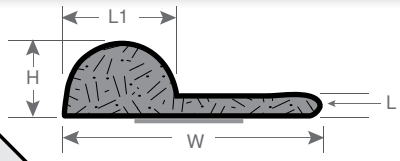

Part Number Explanation

SG	XXX	XXX	X	-	XX.XX
# start	Height	Width	Profile		Length

*Example:
SG130520P-22.50: Gasket .130 tall .520 wide, P-Shape and 22.5" long

Phone: 1.866.Tech.EMI Fax: 813.855.3291 Web: www.leadertechinc.com

Round & T-Shape
Fabric Shielding Gaskets

Shielding Effectiveness
Up to 105 dB

Test Frequencies
30MHz - 10GHz

Low Compression
See page 18 for typical performance

Dura-Layer Construction
Resiliant base with high-performance fabric

Recommended Compression
30-50% of gasket height

ROUND SHAPE

Adhesive mounting not typical.

Available in standard 24” and 48” lengths or cut to length as desired.

Please consult factory for sizes not shown.

See page 12 for part number explanation.

See page 19 for typical cross section and length tolerances.

Tape is not available.

Part	D (in)	(mm)
SG100100Z	0.100	2.54
SG125125Z	0.125	3.18
SG160160Z	0.160	4.06
SG200200Z	0.200	5.08

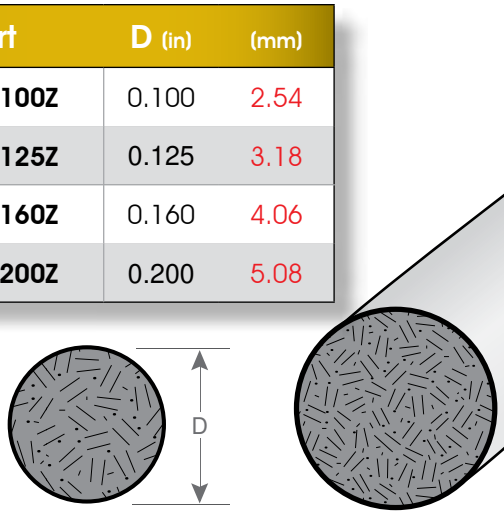

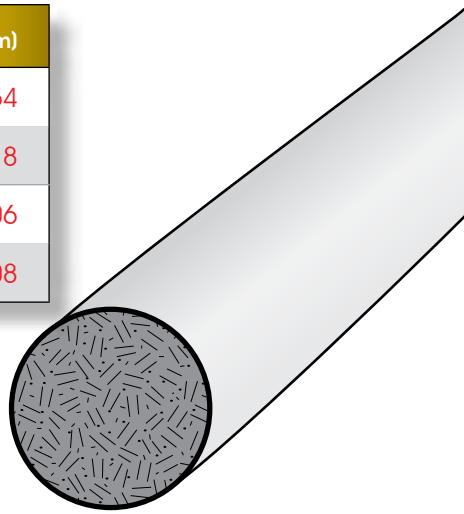

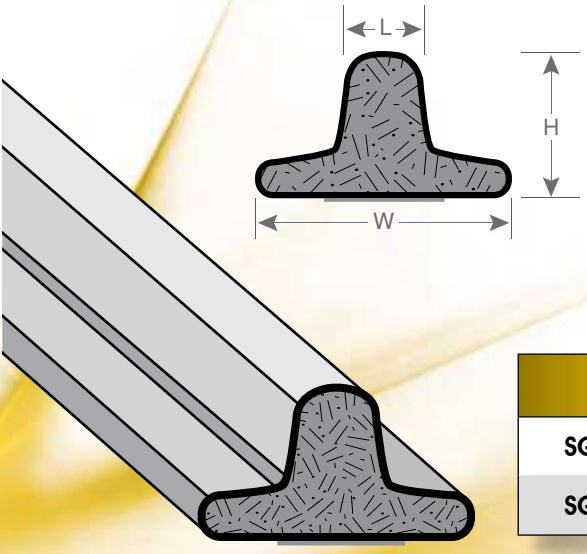

T-SHAPE
with pressure sensitive adhesive mounting.

Available in standard 24” and 48” lengths or cut to length as desired.

Conductive tape and products without tape can also be supplied. Contact factory for ordering information.

Please consult factory for sizes not shown.

See page 12 for part number explanation.

See page 19 for typical cross section and length tolerances.

Part	H (in)	(mm)	W (in)	(mm)	L (in)	(mm)
SG152235T	0.152	3.86	0.235	5.97	0.050	1.27
SG157245T	0.157	3.99	0.245	6.22	0.050	1.27

Oval & Triangle Shape
Fabric Shielding Gaskets

Shielding Effectiveness
Up to 105 dB

Test Frequencies
30MHz - 10GHz

Low Compression
See page 18 for typical performance

Dura-Layer Construction
Resiliant base with high-performance fabric

Recommended Compression
30-50% of gasket height

OVAL SHAPE
with pressure sensitive adhesive mounting.

Available in standard 24" and 48" lengths or cut to length as desired.

Conductive tape and products without tape can also be supplied. Contact factory for ordering information.

Please consult factory for sizes not shown.

See page 12 for part number explanation.

See page 19 for typical cross section and length tolerances.

Part	H (in)	(mm)	W (in)	(mm)
SG140200E	0.140	3.56	0.200	5.08
SG160790E	0.160	4.06	0.790	20.07

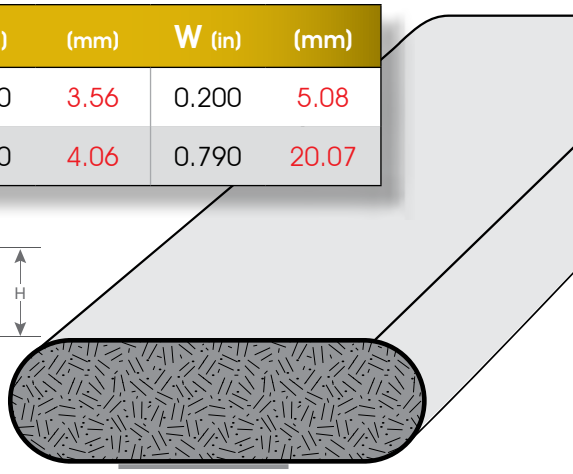

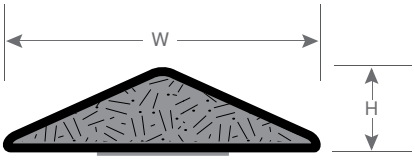

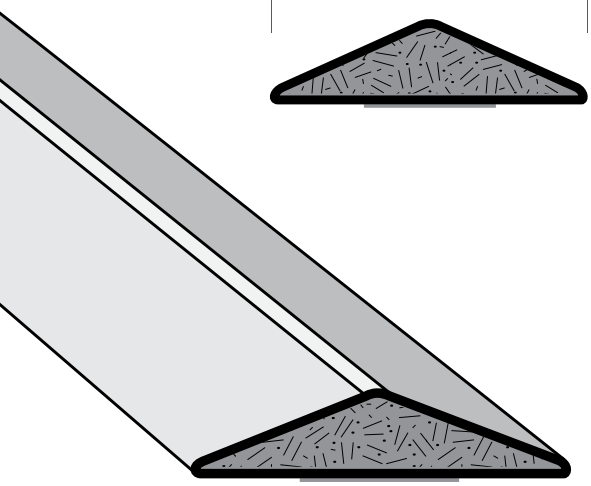

TRIANGLE SHAPE
with pressure sensitive adhesive mounting.

Available in standard 24" and 48" lengths or cut to length as desired.

Conductive tape and products without tape can also be supplied. Contact factory for ordering information.

Please consult factory for sizes not shown.

See page 12 for part number explanation.

See page 19 for typical cross section and length tolerances.

Part	H (in)	(mm)	W (in)	(mm)
SG098500TR	0.098	2.49	0.500	12.70
SG140390TR	0.140	3.56	0.390	9.91

D-Sub Miniature
Fabric Shielding Gaskets

Shielding Effectiveness
Up to 105 dB

Test Frequencies
30MHz - 10GHz

Low Compression
See page 18 for typical performance

Dura-Layer Construction
Resiliant base with high-performance fabric

Recommended Compression
30-50% of gasket height

D-SUB MINIATURE
very conformable to irregular surfaces.

Eliminates any gap problem between connector and I/O surface plates. Compresses from .100" to .025" (2,5 to 0,6mm).

Outside conductive surface is metalized CuNi fabric.

9, 15, 25, 37 and 50 pin connector gaskets available in stock.

Available with adhesive tape. Please consult factory for ordering information.

Consult factory for sizes not shown.

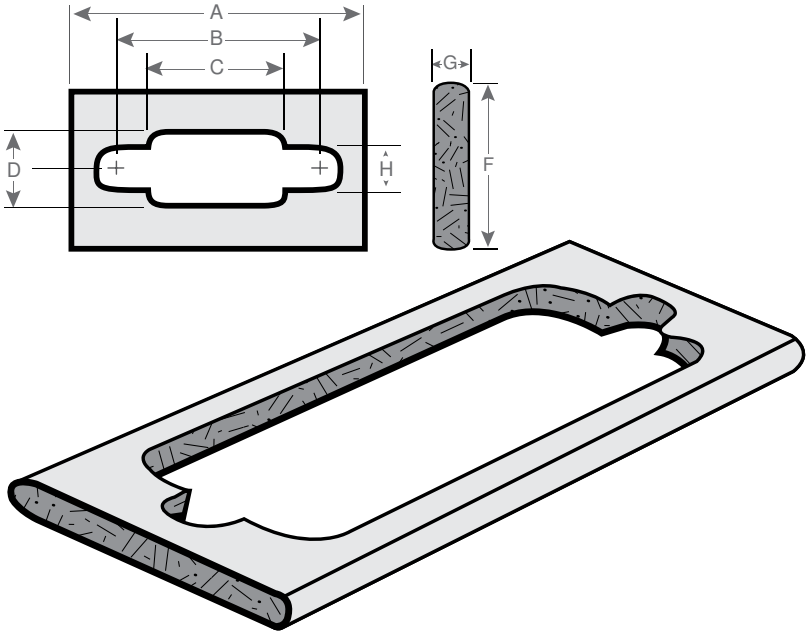

Part	Type	A		B		C		D		E		F		G		H	
SG140009DS	9 Pin	1.40	35.6	.98	24.9	.78	19.8	.44	11.2	.22	5.6	.70	17.8	.100	2.5	.15	3.8
SG175015DS	15 Pin	1.75	44.5	1.31	33.3	1.11	28.2	.44	11.2	.22	5.6	.70	17.8	.100	2.5	.15	3.8
SG228025DS	25 Pin	2.28	57.9	1.85	7.0	1.65	41.9	.44	11.2	.22	5.6	.70	17.8	.100	2.5	.15	3.8
SG293037DS	37 Pin	2.93	74.4	2.50	63.5	2.29	58.2	.44	11.2	.22	5.6	.70	17.8	.100	2.5	.15	3.8
SG284050DS	50 Pin	2.84	72.1	2.41	61.2	2.20	55.9	.55	14.0	.28	7.1	.80	20.3	.100	2.5	.15	3.8

I/O Back Panel Profiles

Fabric Shielding Gaskets

I/O BACK PANEL PROFILES

Leader Tech offers a variety of standard I/0 gaskets in a variety of configurations for computer and instrumentation applications. These profiles are made from .040” or .060” thick Leader Tech FSG material and can be made to custom shapes, sizes and thicknesses as well. PSA is standard on many profiles and available on all designs upon request. Leader Tech FSG I/O gaskets are all UL94-V0 rated and RoHS compliant.

SG100001I

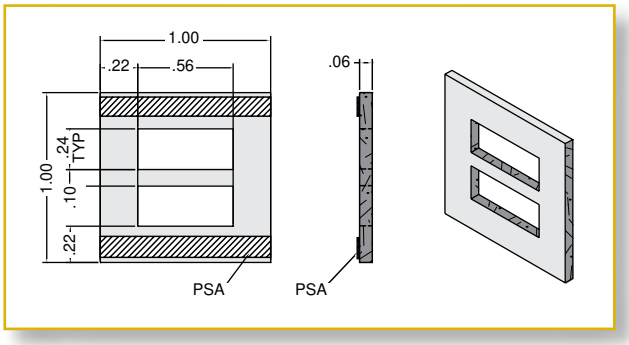

SG100003I

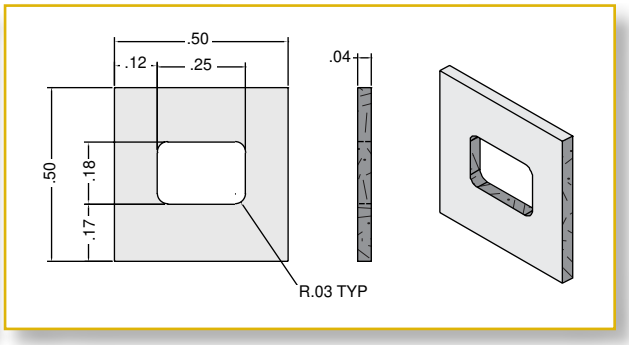

SG100004I

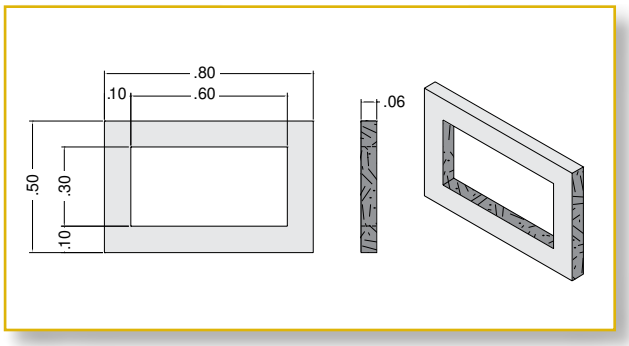

SG100005I

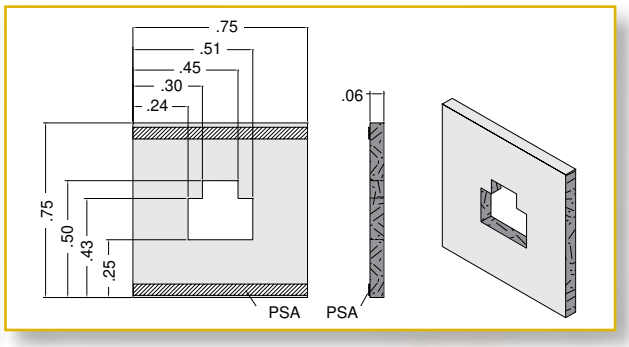

Shielding Fabrics & Conductive Tapes

SHIELDING FABRICS

Shielding effectiveness is determined by a combination of the reflection and absorption of RF signals. Absorption depends on the thickness of the shield material. However, reflection occurs at the shield surface and its effectiveness is independent of thickness. Reflection is the determining factor for all high frequency signal attenuation. (Note: When using these materials for conductive shielding gaskets, conductivity is the determinant.) Maximum reflection occurs with the highest conductivity materials – the best being copper, nickel and combinations of both.

Applications

Bonding or laminating to complex geometric shapes with optional hot melt or conductive adhesive.

- Large surface coverage with minimal seams due to 41" material width
- ESD/RFI-EMI shielding attenuation > 70dB up to 10 GHz for CuNi type
- Seal enclosure panels and frames, seams or joints
- Use for architectural shielding or shielded room wall and ceiling finishing

Options

- All materials are available in non-adhesive, hot melt or conductive adhesive backing
- Standard sheets are 41" x 36" (1041 x 914 mm)
- Longer lengths can be custom ordered – please consult factory for information
- Full rolls are 325' (99M) long – please consult factory for ordering information. Note: conductive adhesive versions are 164' (50M) long

Part Number w/o Adhesive	w/Hot Melt Adhesive	w/Conductive Adhesive	Description	Width		Length		Thickness		Surface Resistivity	500KHz	100MHz	300MHz	1GHz
SF005PCN	SF005PCN-HM	SF005PCN-CA	Conductive CuNi Cloth	41	1041	36	914	0.003	0.08	.005 ohm/mm^2	79dB	81dB	86dB	82dB
SF030PCU	SF030PCU-HM	SF030PCU-CA	Conductive Cu Cloth	41	1041	36	914	0.003	0.08	.035 ohm/mm^2	60dB	67dB	65dB	62dB
SF050PNI	SF050PNI-HM	SF050PNI-CA	Conductive Ni Cloth	41	1041	36	914	0.004	0.10	.050 ohm/mm^2	60dB	72dB	67dB	63dB

FABRIC SHIELDING TAPES

Applications

Cable shielding, enclosure seams, shielded room joints, PCB component shields, irregular surface/component shields, alternative to custom die-cut shielding gaskets or sections.

- Service Temperature: -40°F to 212°F (-40°C to 100°C)
- Adhesion: (peel) 50 oz/in. (54N/100mm)
- Material: CuNi metalized fabric and conductive acrylic adhesive backing w/release liner

Part	Width		Thickness		Length		Resistivity	Impedance
ST005PCN25	.25	6.35	.005	0.13	85.0 ft. rolls	25.0m	0.03 - 0.05 ohms/inch	
ST005PCN50	.50	12.7	.005	0.13	85.0 ft. rolls	25.0m	0.03 - 0.05 ohms/inch	69dB@100MHz
ST005PCN75	.75	19.05	.005	0.13	85.0 ft. rolls	25.0m	0.03 - 0.05 ohms/inch	62dB@500MHz
ST005PCN100	1.00	25.4	.005	0.13	85.0 ft. rolls	25.0m	0.03 - 0.05 ohms/inch	

Compression and Performance Data

Typical Compression Deflection Performance Charts:

Compression/deflection curves are typical. Dimensions shown do not include pressure sensitive adhesive (.005 thick).
Please contact factory for compression force data for parts not shown.

SG125250R

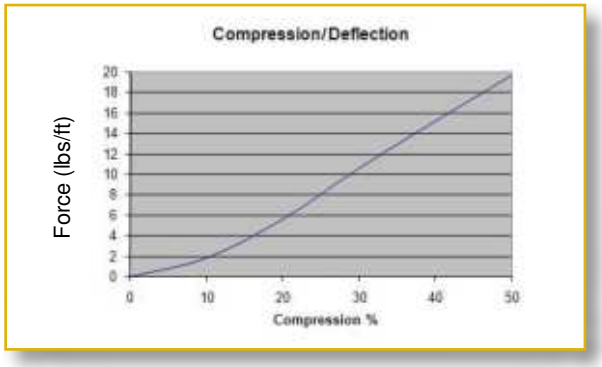

SG187375R

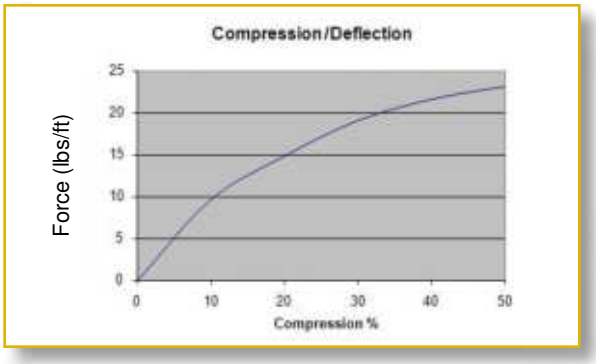

SG250375D

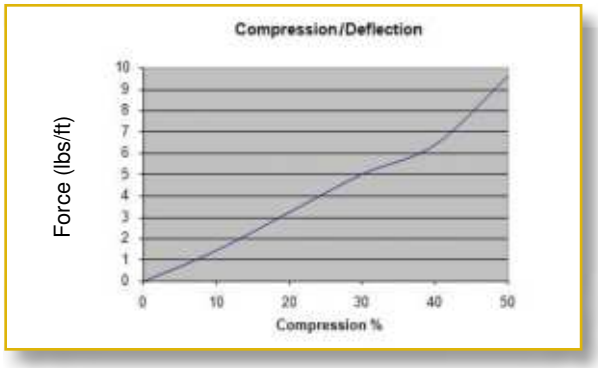

SG106445K

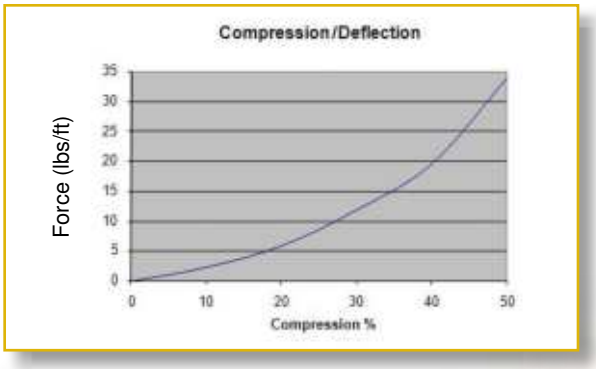

Excellent Shielding Performance

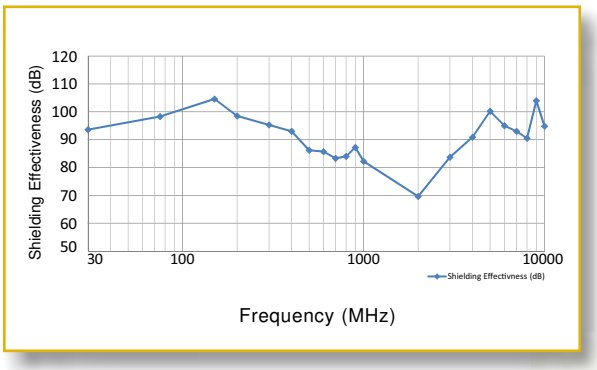

Extremely High Fatigue Resistance

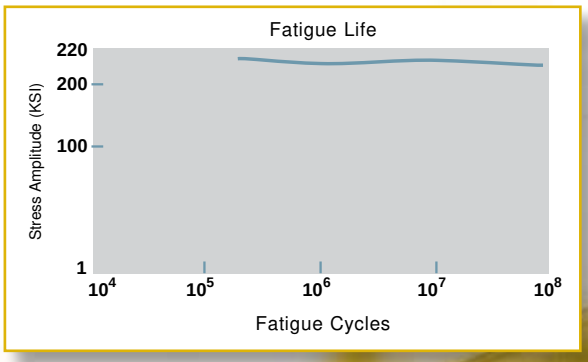

Technical Data

Fabric Shielding Gaskets

Leader Tech (FSG):

Fabric: Nickel/Copper RipStop

Foam: Open Cell Polyurethane

Compression Set: <15% (ASTM D3574)

Temperature Range: -40°F to 158°F (-40°C to 70°C) (ASTM D746)

Surface Resistivity: ≤0.050 Ω/inch² (ASTM F390)

Flammability Rating: UL94V0

Shielding Effectiveness: >Up to 105 dB (MIL-DTL-83528C)

Pressure Sensitive Adhesive: Non-conductive, high peel strength

ROHS: Compliant

REACH: Compliant

Tolerances:

TYPICAL CROSS SECTION TOLERANCES		
±.010 in. (0.25 mm) for all dimensions up to	0.04 in.	(1.02 mm)
±.020 in. (0.50 mm) for all dimensions above	0.04 in.	(1.02 mm)

(Detailed part drawings are available upon request)

TYPICAL LENGTH TOLERANCES			
0.20 to 6.00 in.	(5 - 152 mm)	±.03 in.	(0.76 mm)
6.01 to 18.00 in.	(153 - 457 mm)	±.06 in.	(1.52 mm)
18.01 to 48.00 in.	(458 - 1219 mm)	±.08 in.	(2.03 mm)

For quotes, technical information or personal assistance, contact:

LEADER TECH a HEICO company

12420 Race Track Road, Tampa, Florida 33626
www.leadertechinc.com • sales@leadertechinc.com
866.TECH.EMI (866.832.4364) • Local: 813.855.6921
Fax: 813.855.3291

Cage Code: 4J674

STATEMENT OF LIEU OF WARRANTY: All technical information and data in this document is based on tests and is believed to be accurate and reliable. Nevertheless, since the products described herein are not provided to conform with mutually accepted specifications and the use thereof is unknown, the manufacturer and seller of the products do not guarantee results, freedom from patent infringement, or suitability of the products for any application thereof. The manufacturer and seller of the products described in this document will provide all possible technical assistance and will replace any products proven defective. No statement or recommendations made by the manufacturer or seller not contained herein shall have any force of effect unless in conformity with an agreement signed by an officer of the seller and manufacturer. Product testing by the purchaser is recommended in order to confirm expected results.

copyright© Leader Tech, Inc. 2010

www.LeaderTechInc.com

A passion in all we do

LEADER TECH
a HEICO company

12420 Race Track Rd.
Tampa, Florida 33626
866.TECH.EMI
(866.832.4364)
t 813.855.6921
f 813.855.3291

Reliable Board, Enclosure and Cable Shielding Products

ISO 9001: 2008 CERTIFIED
RoHS COMPLIANT