PART NAME	ECONOBOXES	PART No.	CU-5470 TO CU-5479 & CU-5470-B TO CU-5479-B	REV. DATE	5-8-08

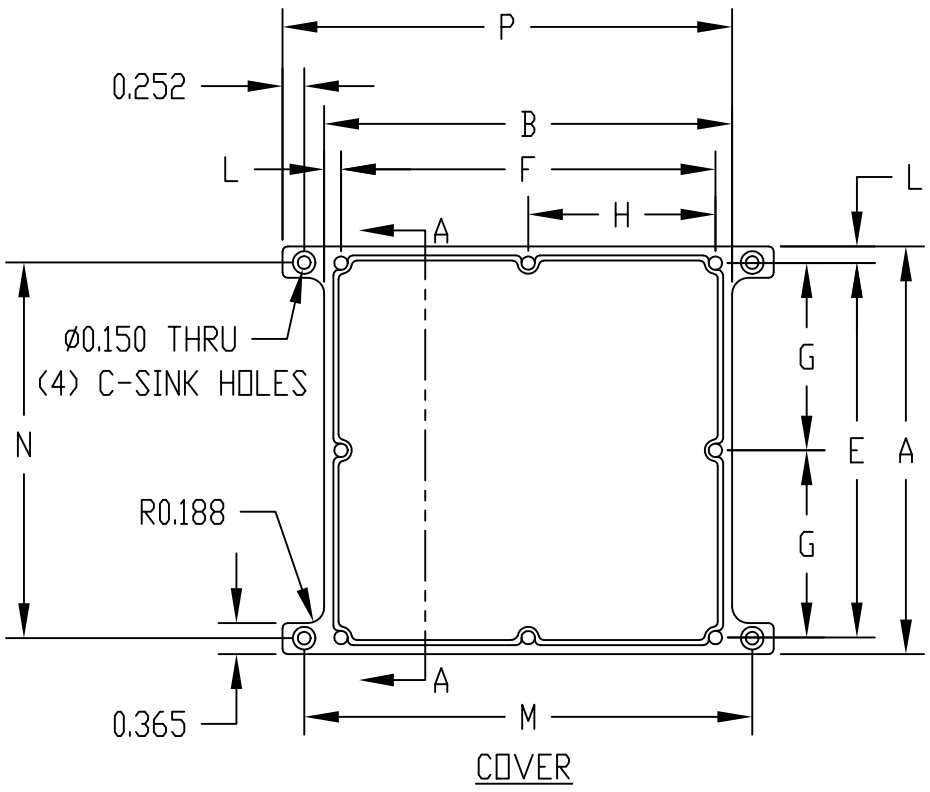

COVER

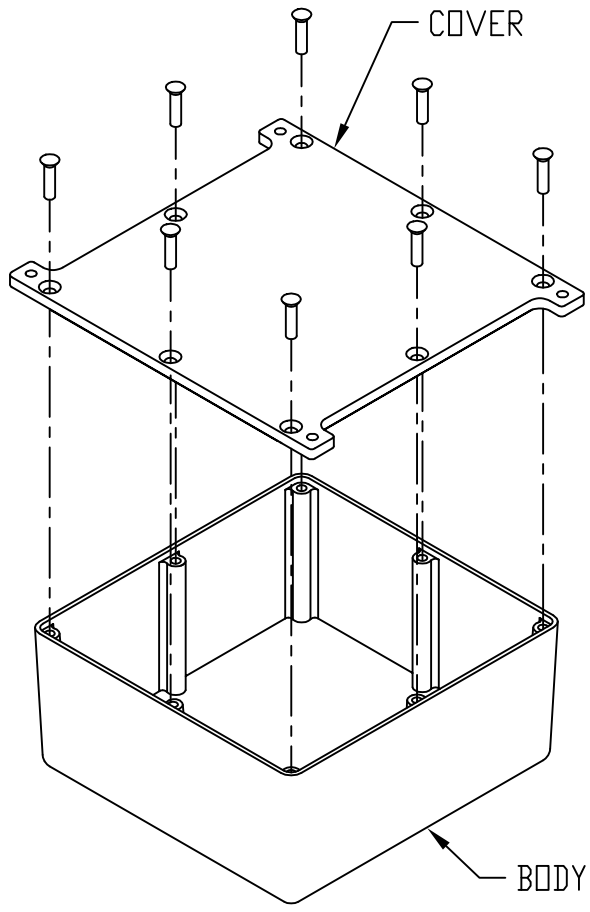

MATERIAL:
ALUMINUM ALLOY #ADC-12
FINISH:
NATURAL (NO SUFFIX)
SMOOTH BLACK (SUFFIX -B)

ALL INTERNAL FILLETS 0.062 RADIUS
ALL INTERNAL ROUNDS 0.125 RADIUS
ALL EXTERNAL ROUNDS 0.125 RADIUS
ALL BOXES ASSEMBLED WITH #6-32 FLAT HD. SCREWS

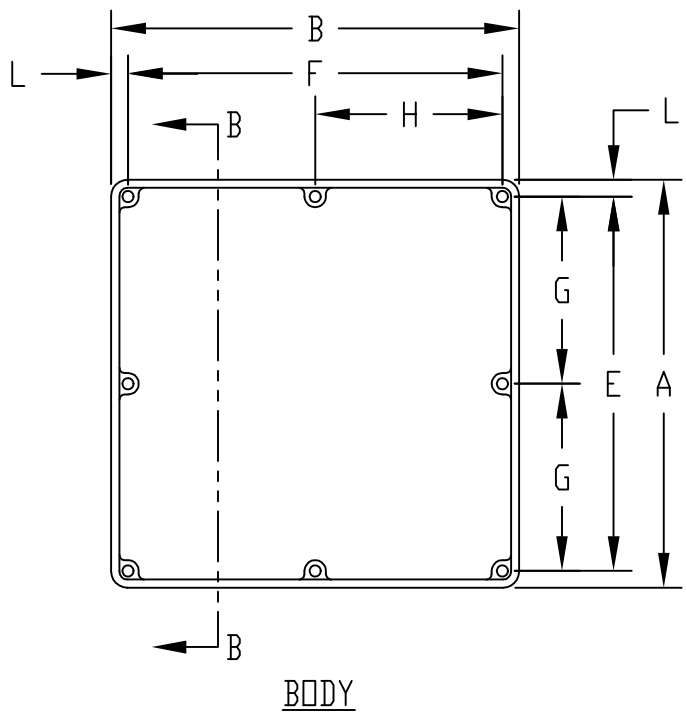

BODY

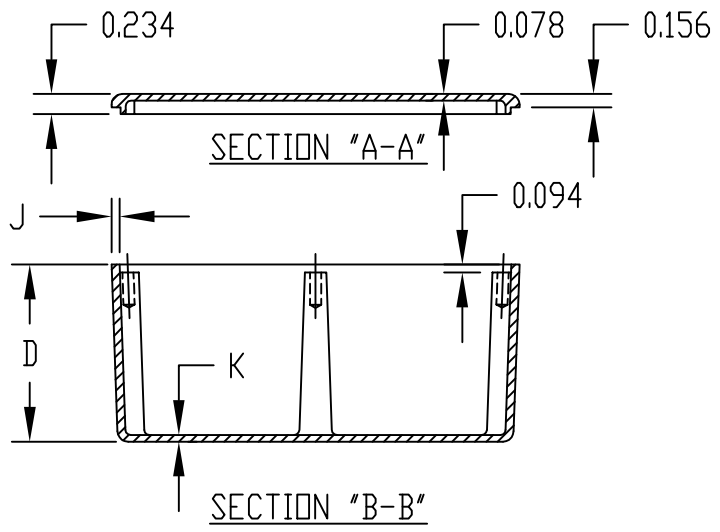

* ASSEMBLED HEIGHT

PART NO.	PART NO.	A	B	* C	D	E	F	G	H	J	K	L	M	N	P
CU-5470	CU-5470-B	2.000	2.000	1.250	1.094	1.625	1.625	---	---	0.065	0.065	0.188	2.468	1.625	2.486
CU-5471	CU-5471-B	4.330	3.250	1.750	1.594	3.955	2.875	---	---	0.094	0.078	0.188	3.718	3.954	3.736
CU-5472	CU-5472-B	4.750	3.150	2.330	2.174	4.375	2.775	---	---	0.094	0.078	0.188	3.618	4.374	3.636
CU-5473	CU-5473-B	4.688	3.688	1.340	1.184	4.313	3.313	---	---	0.094	0.078	0.188	4.156	4.312	4.174
CU-5474	CU-5474-B	4.750	4.750	2.330	2.174	4.375	4.375	---	---	0.094	0.078	0.188	5.218	4.375	5.236
CU-5475	CU-5475-B	4.750	4.750	3.750	3.594	4.375	4.375	---	---	0.094	0.078	0.188	5.218	4.375	5.236
CU-5476	CU-5476-B	6.000	3.250	2.000	1.844	5.610	2.860	2.805	---	0.094	0.078	0.195	3.718	5.604	3.736
CU-5477	CU-5477-B	7.390	4.703	1.500	1.344	7.000	4.313	3.500	---	0.094	0.078	0.195	5.172	7.000	5.190
CU-5478	CU-5478-B	7.500	7.500	2.620	2.464	7.110	7.110	3.555	3.555	0.094	0.078	0.195	7.968	7.110	7.986
CU-5479	CU-5479-B	4.375	2.375	2.136	1.980	4.000	2.000	---	---	0.065	0.078	0.188	2.844	4.000	2.862