PART NAME	UTILIBOX (STYLE E)	PART No.	CU-789 TO CU-792

MATERIAL:
ABS THERMOPLASTIC
(FLAMMABILITY RATING OF 94V-0 AT 0.070" THICKNESS AND CONTINUOUS USE TEMPERATURE OF 70° C.)

COLOR: BLACK

COVER REDUCES INSIDE HEIGHT BY 0.075.

LENGTH AND WIDTH DIMENSIONS ARE TAKEN FROM CLOSED END OF THE BOX. DIMENSIONS INCREASE SLIGHTLY AT OPEN END DUE TO TAPER.

FOUR (4) #4 x 0.500" LG. SELF THREADING SCREWS WITH HI/LOW THREADS ARE SUPPLIED FOR MOUNTING COVER.

FINISH:
BODY - OUTSIDE SURFACES ARE TEXTURED FINISH WITH TEXTURED INSERT AREA.
COVER - SURFACES ARE SMOOTH.

NOTE: ALL DIMENSIONS HAVE ±0.010 TOLERANCE UNLESS OTHERWISE SPECIFIED.

MOUNTING BOSSES USE EITHER M2.5 METRIC OR #4 STD. SHEET METAL SCREWS x 0.250" LG. (NOT SUPPLIED)

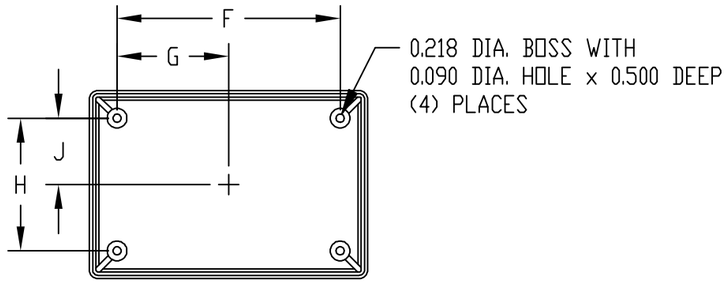

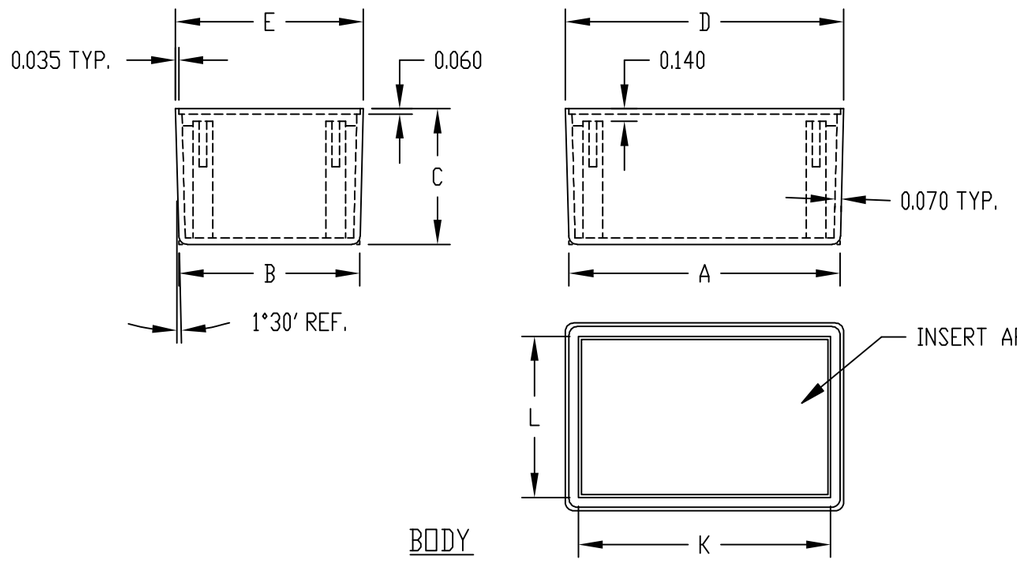

BODY

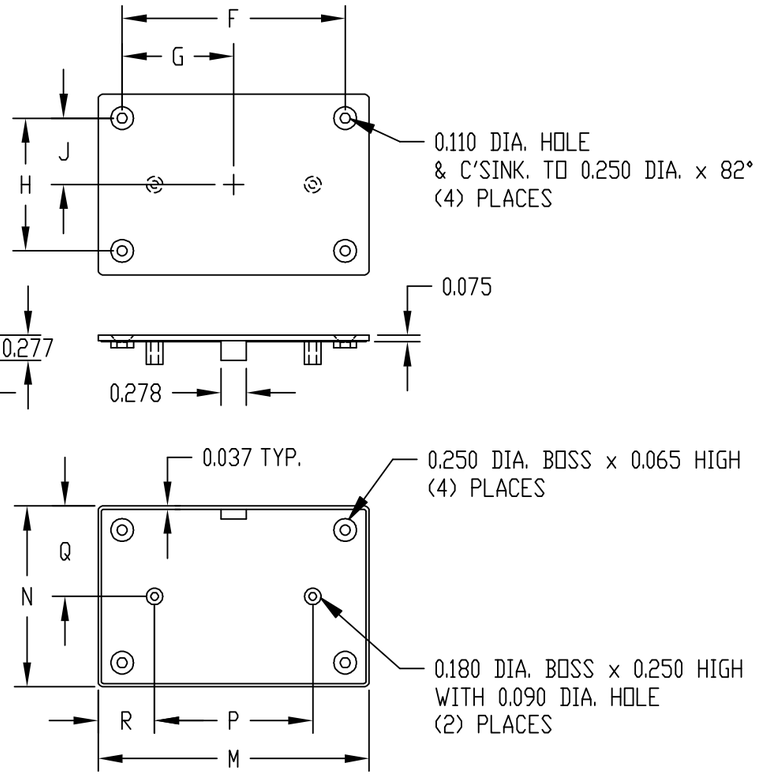

COVER

PART No.	A	B	C	D	E	F	G	H	J	K	L	M	N	P	Q	R
CU-789	3.000	2.000	0.900	3.047	2.047	2.625	1.313	1.625	0.813	3.015	2.015	3.010	2.010	1.750	1.005	0.633
CU-790	3.000	2.000	1.500	3.079	2.079	2.625	1.313	1.625	0.813	3.015	2.015	3.010	2.010	1.750	1.005	0.633
CU-791	3.000	3.000	1.500	3.079	3.079	2.625	1.313	2.625	1.313	3.015	3.015	3.015	3.015	1.750	1.508	0.633
CU-792	4.000	1.750	1.000	4.052	1.802	3.600	1.800	1.340	0.670	3.975	1.725	3.970	1.720	3.000	0.860	0.485

To learn more about plastic electronic enclosures visit http://www.budind.com/