HD3SS3202 Two-Channel Differential 2:1/1:2 USB3.1 Mux/Demux

1 Features

- Provides MUX/DEMUX Solution for USB Type-C™ Ecosystem for USB 3.1 Gen 1 and Gen 2 Data Rates
- Compatible With MIPI DSI/CSI-2 DPHY, LVDS, PCIE Gen III, SATA Express, SATA
- Operates up to 10 Gbps
- Wide –3-dB Differential BW of over 8 GHz
- Excellent Dynamic Characteristics (at 5 GHz)
  - Crosstalk = –41 dB
  - Off Isolation = –20 dB
  - Insertion Loss = –2.4 dB
  - Return Loss = –8 dB
- Bidirectional "Mux/De-Mux" Differential Switch
- Supports Common Mode Voltage 0 to 2 V
- Single Supply Voltage V_{CC} of 3.3 V ±10%
- Commercial Temperature Range of 0°C to 70°C (HD3SS3202)
- Industrial Temperature Range of –40°C to 85°C (HD3SS3202I)

2 Applications

- USB Type-C™ Ecosystem
- Desktop and Notebook PCs
- Shared I/O Ports
- Docking Stations
- Monitors, TVs
- Set Top Box
- Network Security Cameras

3 Description

The HD3SS3202 is a high-speed bidirectional passive switch in mux or demux configurations suited for USB Type-C™ applications that support USB 3.1 Gen 1 and Gen 2 data rates. Based on control pin SEL, the device supplies switching on differential channels between Port B or Port C to Port A.

The HD3SS3202 is a generic analog differential passive switch. It works with any high-speed interface application that requires a common mode voltage range of 0 to 2 V, and requires a differential signaling with differential amplitude at a maximum of 1800 mVpp. The device has adaptive tracking that makes sure the channel stays unchanged for the full common mode voltage range.

The device allows high-speed switching with minimum attenuation to the signal eye diagram with little added jitter. It uses < 1.65 mW (typical) of power when in operation. It has a shutdown mode that is used by the OEn pin resulting < .02 µW (typical).

Device Information(1)

PART NUMBER	PACKAGE	BODY SIZE (NOM)
HD3SS3202 HD3SS3202I	UQFN (16)	2.60 mm x 1.80 mm

(1) For all available packages, see the orderable addendum at the end of the data sheet.

Simplified Schematic

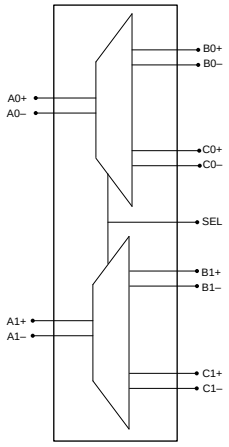

An IMPORTANT NOTICE at the end of this data sheet addresses availability, warranty, changes, use in safety-critical applications, intellectual property matters and other important disclaimers. PRODUCTION DATA.

Table of Contents

1 Features ... 1
2 Applications ... 1
3 Description ... 1
4 Revision History ... 2
5 Pin Configuration and Functions ... 3
6 Specifications ... 4
6.1 Absolute Maximum Ratings ... 4
6.2 ESD Ratings ... 4
6.3 Recommended Operating Conditions ... 4
6.4 Thermal Information ... 4
6.5 Electrical Characteristics ... 5
6.6 High-Speed Performance Parameters ... 5
6.7 Switching Characteristics ... 6
6.8 Typical Characteristics ... 6
7 Parameter Measurement Information ... 7
8 Detailed Description ... 9
8.1 Overview ... 9
8.2 Functional Block Diagram ... 9
8.3 Feature Description ... 9
8.4 Device Functional Modes ... 10
9 Application and Implementation ... 11
9.1 Application Information ... 11
9.2 Typical Applications ... 14
9.3 Systems Examples ... 15
10 Power Supply Recommendations ... 18
11 Layout ... 18
11.1 Layout Guidelines ... 18
11.2 Layout Example ... 18
12 Device and Documentation Support ... 19
12.1 Receiving Notification of Documentation Updates 19
12.2 Community Resources ... 19
12.3 Trademarks ... 19
12.4 Electrostatic Discharge Caution ... 19
12.5 Glossary ... 19
13 Mechanical, Packaging, and Orderable Information ... 19

4 Revision History

NOTE: Page numbers for previous revisions may differ from page numbers in the current version.

Changes from Original (May 2018) to Revision A	Page
• Changed I_{CC} max from 0.6mA to 0.8mA	5

Copyright © 2018, Texas Instruments Incorporated

5 Pin Configuration and Functions

RSV Package
16-Pin UQFN
Top View

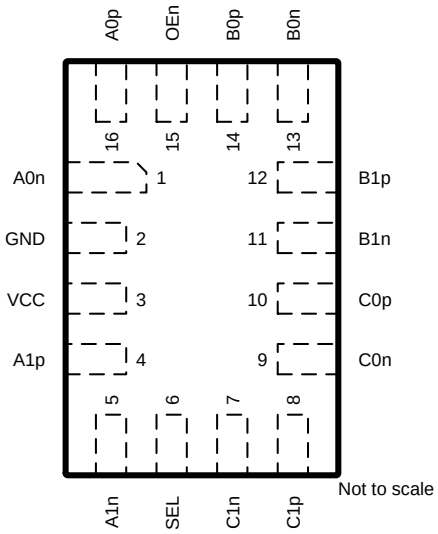

Pin Functions

PIN		I/O	DESCRIPTION
NAME	NO.		
A0n	1	I/O	Port A, channel 0, high-speed negative signal
GND	2	G	Ground
V_{CC}	3	P	3.3-V power
A1p	4	I/O	Port A, channel 1, high-speed positive signal
A1n	5	I/O	Port A, channel 1, high-speed negative signal
SEL	6	I	Port select pin. To help with noise immunity, a 0.01 µF capacitor to GND on this pin is suggested. L: Port A to Port B H: Port A to Port C
C1n	7	I/O	Port C, channel 1, high-speed negative signal (connector side)
C1p	8	I/O	Port C, channel 1, high-speed positive signal (connector side)
C0n	9	I/O	Port C, channel 0, high-speed negative signal (connector side)
C0p	10	I/O	Port C, channel 0, high-speed positive signal (connector side)
B1n	11	I/O	Port B, channel 1, high-speed negative signal (connector side)
B1p	12	I/O	Port B, channel 1, high-speed positive signal (connector side)
B0n	13	I/O	Port B, channel 0, high-speed negative signal (connector side)
B0p	14	I/O	Port B, channel 0, high-speed positive signal (connector side)
OEn	15	I	Active-low chip enable. To help with noise immunity, a 0.01 µF capacitor to GND on this pin is suggested. L: Normal operation H: Shutdown
A0p	16	I/O	Port A, channel 0, high-speed positive signal

Copyright © 2018, Texas Instruments Incorporated

6 Specifications

6.1 Absolute Maximum Ratings

over operating free-air temperature range (unless otherwise noted)(1)

			MIN	MAX	UNIT
V_{CC}	Supply voltage		–0.5	4	V
	Voltage	Differential I/O	–0.5	2.5	V
		Control pins	–0.5	V_{CC}+ 0.5	
T_{stg}	Storage temperature		–65	150	°C

(1) Stresses beyond those listed under *Absolute Maximum Ratings* may cause permanent damage to the device. Theseare stress ratings only, which do not imply functional operation of the device at these or anyother conditions beyond those indicated under *Recommended OperatingConditions*. Exposure to absolute-maximum-rated conditions for extended periods mayaffect device reliability.

6.2 ESD Ratings

			VALUE	UNIT
$V_{(ESD)}$	Electrostatic discharge	Human-body model (HBM), per ANSI/ESDA/JEDEC JS-001(1)	±2000	V
		Charged-device model (CDM), per JEDEC specification JESD22-C101(2)	±500	

(1) JEDEC document JEP155 states that 500-V HBM allows safemanufacturing with a standard ESD control process.
(2) JEDEC document JEP157 states that 250-V CDM allows safemanufacturing with a standard ESD control process.

6.3 Recommended Operating Conditions

over operating free-air temperature range (unless otherwise noted)

			MIN	NOM	MAX	UNIT
V_{CC}	Supply voltage		3	3.3	3.6	V
V_{ih}	Input high voltage (SEL, OEn pins)		2		V_{CC}	V
V_{il}	Input low voltage (SEL, OEn pins)		–0.1		0.8	V
V_{diff}	High-speed signal pins differential voltage		0		1.8	V_{pp}
V_{cm}	High speed signal pins common mode voltage		0		2	V
T_A	Operating free-air/ambient temperature	HD3SS3202RSV	0		70	°C
		HD3SS3202IRSV	–40		85	

6.4 Thermal Information

THERMAL METRIC(1)		HD3SS3202 RSV (VQFN) 16 PINS	UNIT
$R_{\theta JA}$	Junction-to-ambient thermal resistance	117.3	°C/W
$R_{\theta JC(top)}$	Junction-to-case (top) thermal resistance	52.1	°C/W
$R_{\theta JB}$	Junction-to-board thermal resistance	52.6	°C/W
ψ_{JT}	Junction-to-top characterization parameter	1.2	°C/W
ψ_{JB}	Junction-to-board characterization parameter	51.1	°C/W
$R_{\theta JC(bot)}$	Junction-to-case (bottom) thermal resistance	n/a	°C/W

(1) For more information about traditional and new thermalmetrics, see the Semiconductor and IC Package ThermalMetrics application report.

Copyright © 2018, Texas Instruments Incorporated

6.5 Electrical Characteristics

over operating free-air temperature range (unless otherwise noted)

PARAMETER		TEST CONDITIONS	MIN	TYP	MAX	UNIT
I_{CC}	Device active current	V_{CC} = 3.3 V, OEn = 0		0.5	0.8	mA
I_{STDN}	Device shutdown current	V_{CC} = 3.3 V, OEn = V_{CC}		0.005	1	µA
C_{ON}	Output ON capacitance to GND			0.6		pF
C_{OFF}	Output OFF capacitance to GND			0.8		pF
R_{ON}	Output ON resistance	V_{CC} = 3.3 V; V_{CM} = 0 to 2 V; I_O = –8 mA		5	8	Ω
ΔR_{ON}	On-resistance match between pairs of the same channel	V_{CC} = 3.3 V; –0.35 V ≤ V_{IN} ≤ 2.35 V; I_O = –8 mA			0.7	Ω
R_{FLAT_ON}	On-resistance flatness R_{ON}(MAX) – R_{ON}(MIN)	V_{CC} = 3.3 V; –0.35 V ≤ V_{IN} ≤ 2.35 V			1	Ω
$I_{IH,CTRL}$	Input high current, control pins (SEL, OEn)				1	µA
$I_{IL,CTRL}$	Input low current, control pins (SEL, OEn)				1	µA
$I_{IH,HS}$	Input high current, high-speed pins [Ax/Bx/Cx][p/n]	V_{IN} = 2 V for selected port, A and B with SEL = 0, and A and C with SEL = V_{CC}			1	µA
$I_{IH,HS}$	Input high current, high-speed pins [Ax/Bx/Cx][p/n]	V_{IN} = 2 V for non-selected port, C with SEL = 0, and B with SEL = V_{CC} (1)		100	140	µA
$I_{IL,HS}$	Input low current, high-speed pins [Ax/Bx/Cx][p/n]				1	µA

(1) There is a 20-kΩ pull-down in non-selected port.

6.6 High-Speed Performance Parameters

PARAMETER		TEST CONDITION	MIN	TYP	MAX	UNIT
I_L	Differential insertion loss	f = 0.3 MHz		-0.4		dB
		f = 0.625 MHz		-0.4		
		f = 2.5 GHz		-1.3		
		f = 4 GHz		-2.0		
		f = 5 GHz		-2.4		
BW	–3-dB bandwidth			8		GHz
R_L	Differential return loss	f = 0.3 MHz		-27		dB
		f = 2.5 GHz		-11		
		f = 4 GHz		-9		
		f = 5 GHz		-8		
O_{IRR}	Differential OFF isolation	f = 0.3 MHz		-77		dB
		f = 2.5 GHz		-23		
		f = 4 GHz		-21		
		f = 5 GHz		-20		
X_{TALK}	Differential crosstalk	f = 0.3 MHz		-82		dB
		f = 2.5 GHz		-44		
		f = 4 GHz		-41		
		f = 5 GHz		-41		

Copyright © 2018, Texas Instruments Incorporated

6.7 Switching Characteristics

PARAMETER			MIN	TYP	MAX	UNIT
t_{PD}	Switch propagation delay (see Figure 4)				80	ps
t_{SW_ON}	Switching time SEL-to-Switch ON (see Figure 3)				0.5	µs
t_{SW_OFF}	Switching time SEL-to-Switch OFF (see Figure 3)				0.5	µs
t_{SK_INTRA}	Intra-pair output skew (see Figure 4)				6	ps
t_{SK_INTER}	Inter-pair output skew (see Figure 4)				20	ps
t_{PD}	Average propagation delay, see Figure 1	f = 100 MHz	16		54	ps
		f = 200 MHz	33		63	
		f = 300 MHz	33		59	
		f = 400 MHz	33		57	
		f = 500 MHz	33		56	
		f = 600 MHz	33		53	
		f = 700 MHz	33		50	
		f = 750 MHz	33		50	
		f = 800 MHz	33		50	
		f = 900 MHz	31		50	
		f = 1000 MHz	30		50	

6.8 Typical Characteristics

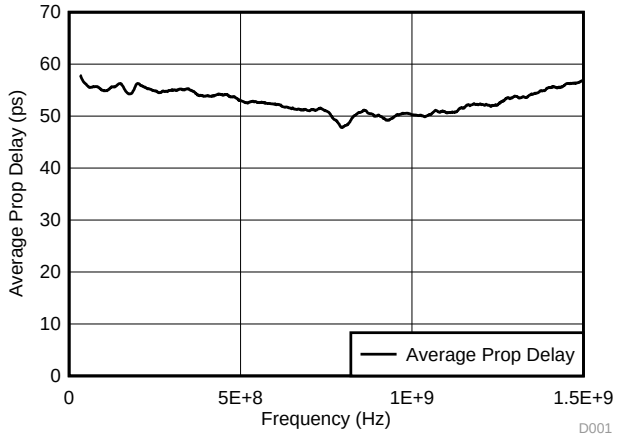

Figure 1. Average Propagation Delay vs Frequency

Copyright © 2018, Texas Instruments Incorporated

7 Parameter Measurement Information

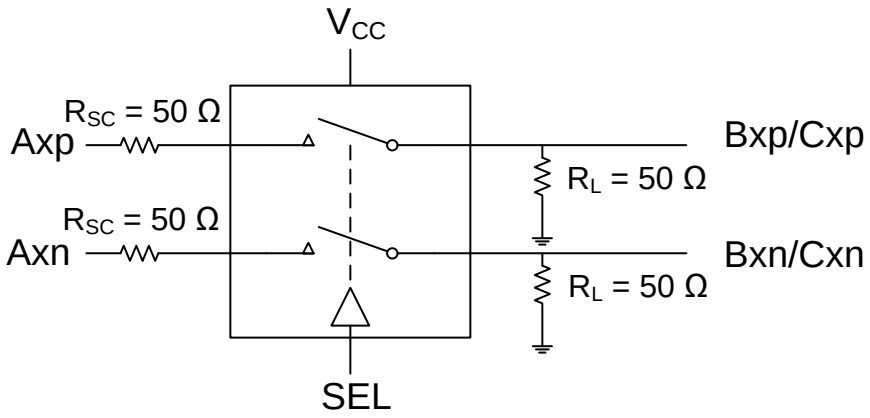

Figure 2. Test Setup

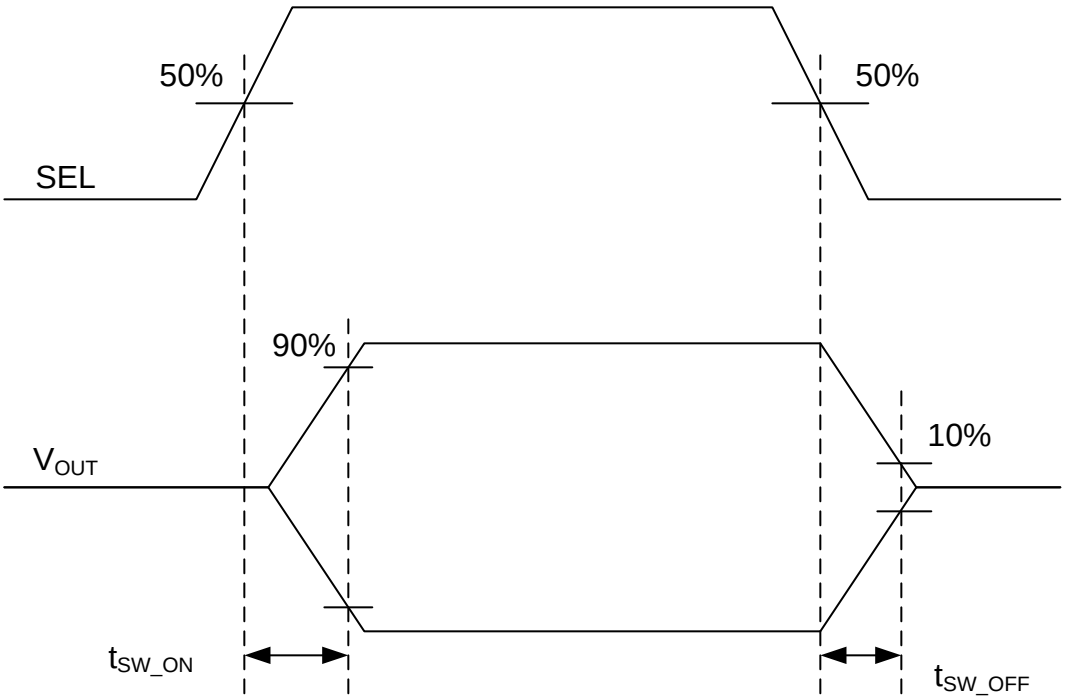

Figure 3. Switch On and Off Timing Diagram

Parameter Measurement Information (continued)

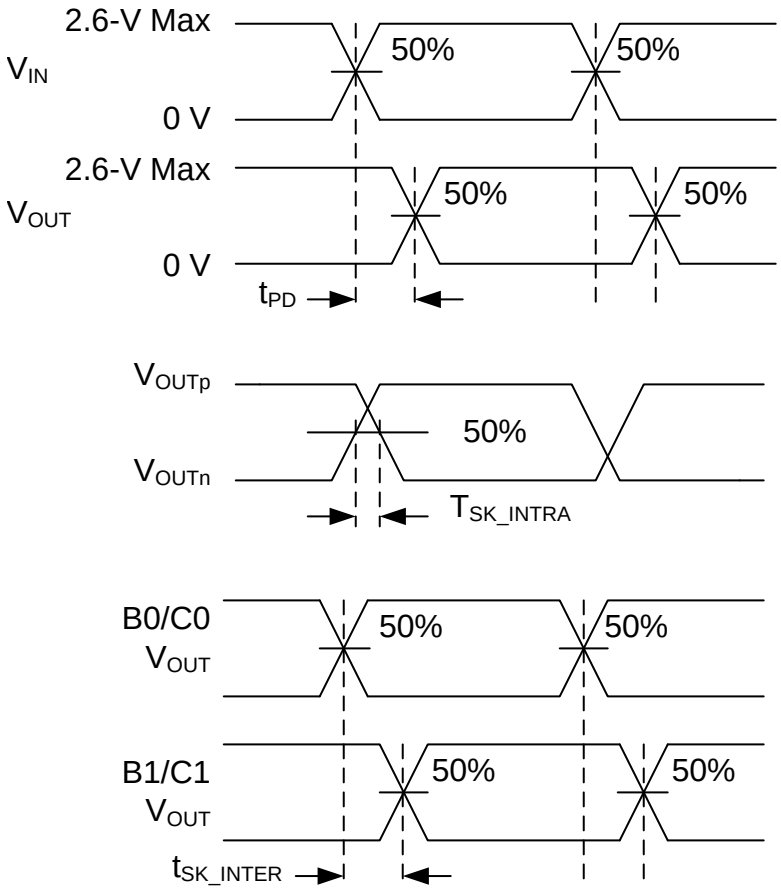

Figure 4. Timing Diagrams and Test Setup

Copyright © 2018, Texas Instruments Incorporated

8 Detailed Description

8.1 Overview

The HD3SS3202 is a generic analog differential passive switch that can works for any high-speed interface applications requiring a common mode voltage range of 0 to 2 V and differential signaling with differential amplitude up to 1800 mVpp. It uses adaptive tracking to ensures the channel remain unchanged for the entire common mode voltage range.

Excellent dynamic characteristics of the device allow high-speed switching with minimum attenuation to the signal eye diagram with little added jitter. It consumes < 1.65 mW (typ) of power when operational and has a shutdown mode exercisable by OEn pin resulting < .02 µW (typical).

8.2 Functional Block Diagram

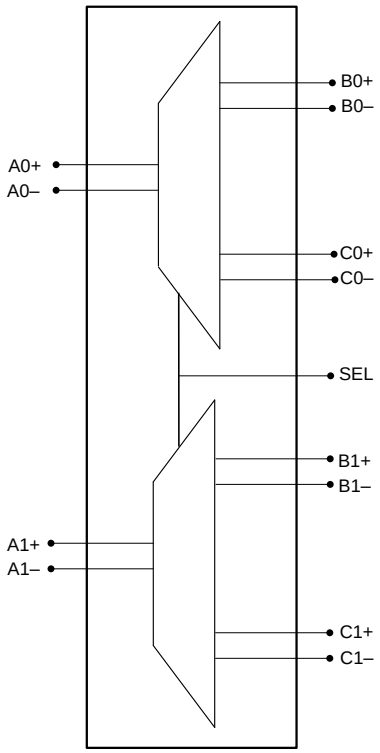

8.3 Feature Description

8.3.1 Output Enable and Power Savings

The HD3SS3202 has two power modes, active/normal operating mode and standby/shutdown mode. During standby mode, the device consumes little current to save the maximum power. To enter standby mode, the OEn control pin is pulled high through a resistor and must remain high. For active/normal operation, the OEn control pin should be pulled low to GND.

HD3SS3202 consumes < 1.65 mW (typ) of power when operational and has a shutdown mode exercisable by the OEn pin resulting < .02 µW (typ).

Copyright © 2018, Texas Instruments Incorporated

8.4 Device Functional Modes

Table 1. Port Select Control Logic(1)

PORT A CHANNEL	PORT B OR PORT C CHANNEL CONNECTED TO PORT A CHANNEL	
	SEL = L	SEL = H
A0p	B0p	C0p
A0n	B0n	C0n
A1p	B1p	C1p
A1n	B1n	C1n

(1) The HD3SS3202 can tolerate polarity inversions for all differential signals on Ports A, B, and C. Take care to ensure the same polarity is maintained on Port A versus Ports B/C.

Copyright © 2018, Texas Instruments Incorporated

9 Application and Implementation

NOTE

Information in the following applications sections is not part of the TI component specification, and TI does not warrant its accuracy or completeness. TI's customers are responsible for determining suitability of components for their purposes. Customers should validate and test their design implementation to confirm system functionality.

9.1 Application Information

The HD3SS3202 is a generic 2-channel high-speed mux/demux type of switch that can be used for routing high-speed signals between two different locations on a circuit board. The HD3SS3202 supports several high-speed data protocols with a differential amplitude of <1800 mVpp and a common mode voltage of < 2 V, as with USB 3.1 and DisplayPort 1.2. The device has one select input (SEL) pin that can be controlled by an available GPIO pin within a system or from a microcontroller.

The HD3SS3202 with its adaptive common mode tracking technology can support applications where the common mode is different between the RX and TX pair. The two USB3.1 Type C connector applications show both a host and device side. The cable between the two connectors swivels the pairs to properly route the signals to the correct pin. The other applications are more generic because different connectors can be used.

Many interfaces require AC coupling between the transmitter and receiver. The 0201 capacitors are the preferred option to provide AC coupling; 0402 size capacitors also work. Avoid the capacitors greater than 0402 and C-packs. When placing AC coupling capacitors, symmetric placement is best. The designer should place them along the TX pairs on the system board, which are usually routed on the top layer of the board.

The AC coupling capacitors have several placement options. Because the HD3SS3202 requires a bias voltage, the designer must place the capacitors on one side of the switch. If they are placed on both sides of the switch, a biasing voltage should be provided. Figure 5 shows a few placement options. The coupling capacitors are placed between the HD3SS3202 and endpoint. In this situation, the HD3SS3202 is biased by the system/host controller.

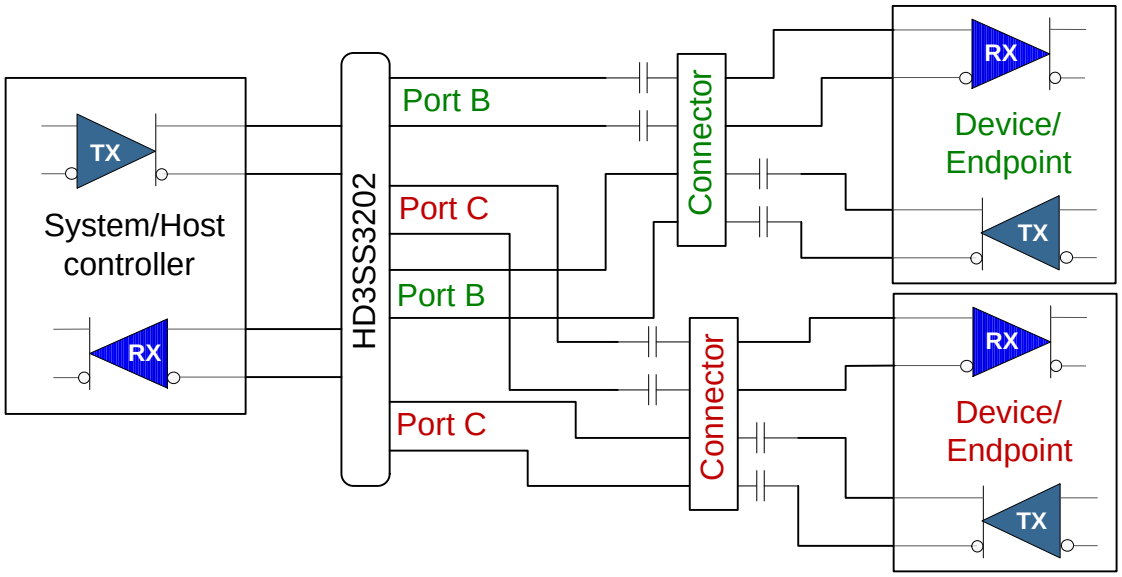

Figure 5. AC Coupling Capacitors between HD3SS3202 TX and Endpoint TX

Application Information (continued)

In Figure 6, the coupling capacitors are placed on the host transmit pair and endpoint transmit pair. In this situation, the switch on top is biased by the endpoint and the lower switch is biased by the host controller.

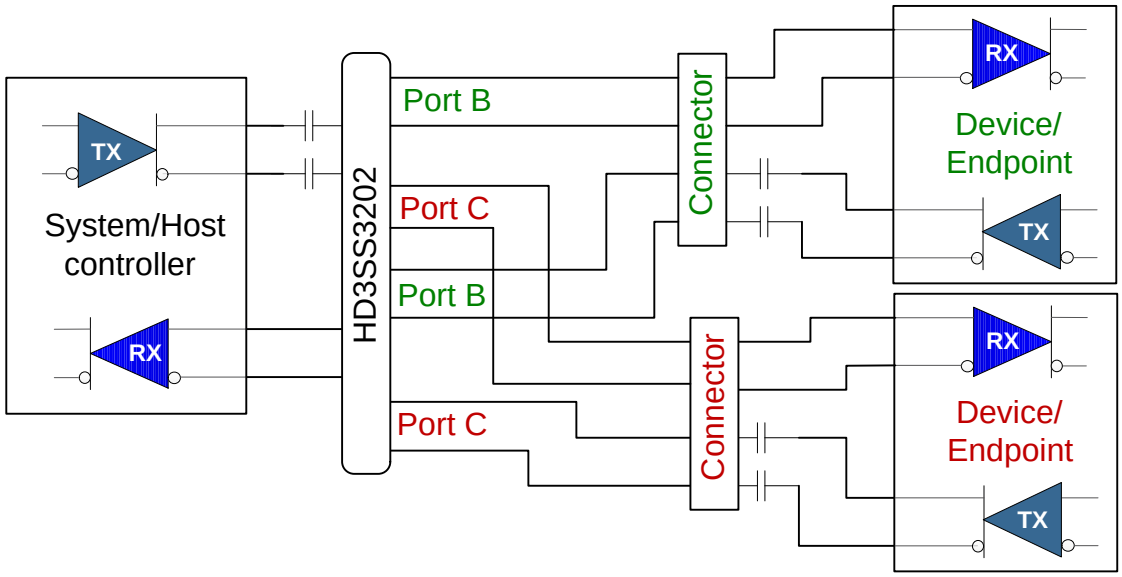

Figure 6. AC Coupling Capacitors on Host TX and Endpoint TX

If the common mode voltage in the system is higher than 2 V, the coupling capacitors are placed on both sides of the switch (shown in Figure 7). A biasing voltage of < 2 V is required in this case.

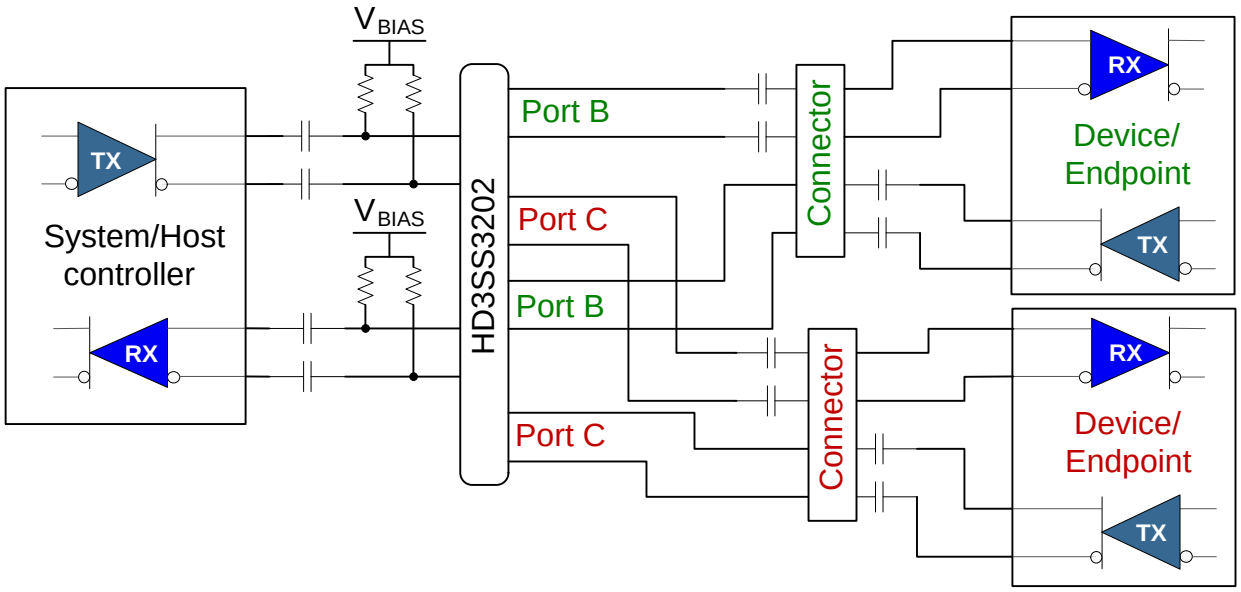

V_{BIAS} can be GND

Capacitor and resistor values depend upon application.

Figure 7. AC Coupling Capacitors on Both Sides of Switch

Copyright © 2018, Texas Instruments Incorporated

Application Information (continued)

The HD3SS3202 can be used with the USB Type C connector to support the connector's flip ability. Figure 8 provides the generic location for the AC coupling capacitors for this application.

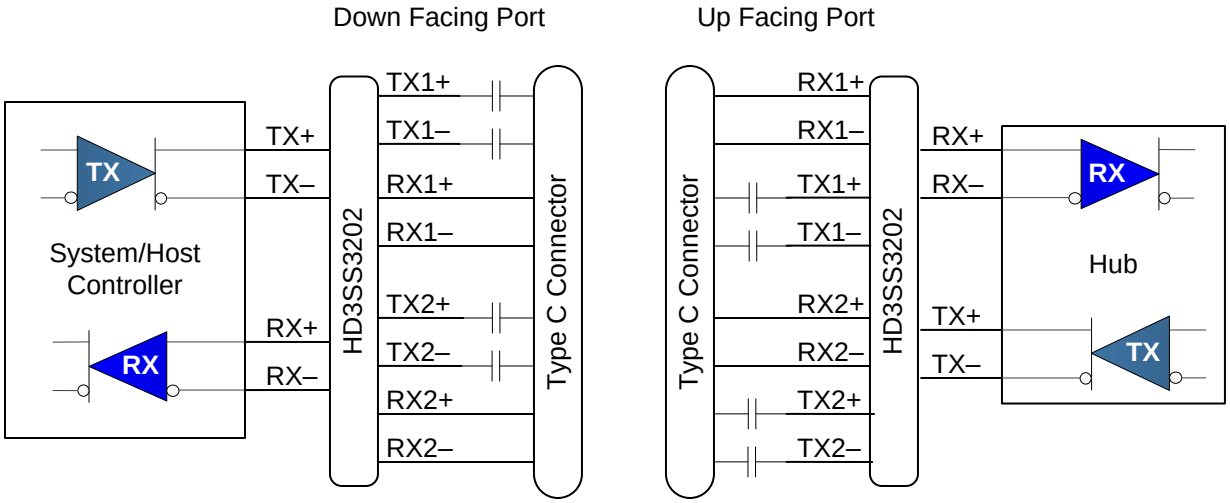

Figure 8. AC Coupling Capacitors for USB Type C

9.2 Typical Applications

9.2.1 Down Facing Port for USB3.1 Type C

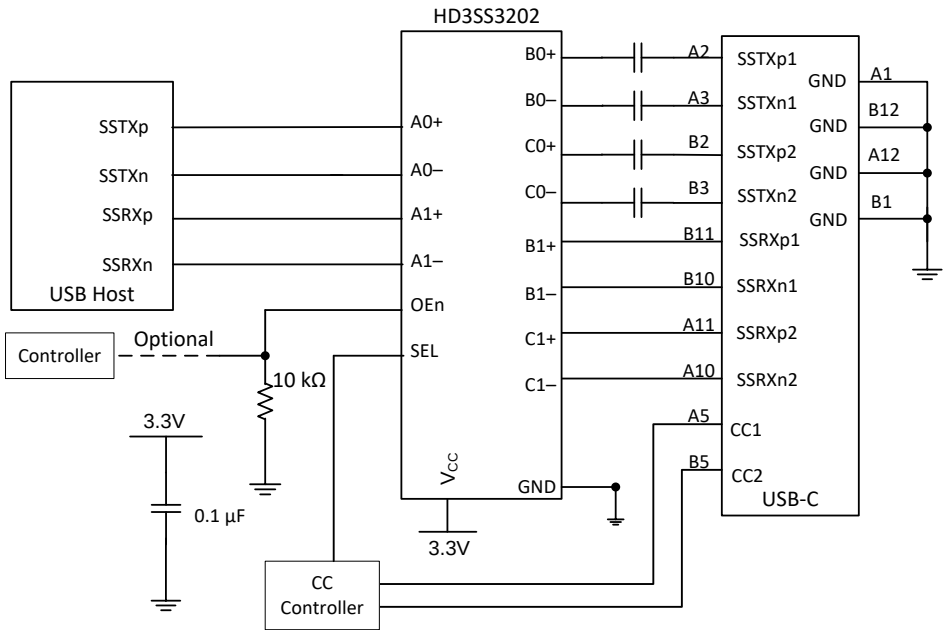

Figure 9. Down Facing Port for USB3.1 Type C Connector

9.2.1.1 Design Requirements

The HD3SS3202 can be designed into many different applications. All the applications have certain requirements for the system to work properly. The HD3SS3202 requires 3.3-V ±10% V_{CC} rail. The OEn pin must be low for device to work; otherwise, it disables the outputs. This pin can be driven by a processor. The expectation is that one side of the device has AC coupling capacitors. Table 2 provides information on expected values to perform properly.

Table 2. Design Parameters

DESIGN PARAMETER	VALUE
V_{CC}	3.3 V
AXp/n, BXp/n, CXp/n CM input voltage	0 to 2 V
Control/OEn pin max voltage for low	0.8 V
Control/OEn pin min voltage for high	2.0 V
AC coupling capacitor	75 nF to 265 nF.
R_{BIAS} (Figure 9) when needed	100 kΩ

9.2.1.2 Detailed Design Procedure

The HD3SS3202 is a high-speed passive switch device that can behave as a mux or demux. Because this is a passive switch, signal integrity is important because the device provides no signal conditioning capability. The device can support 1 to 2 inches of board trace and a connector on either end.

To design in the HD3SS3202, the designer needs to understand the following.

- Determine the loss profile between circuits that are to be muxed or demuxed.
- Provide clean impedance and electrical length matched board traces.
- Depending upon the application, determine the best place to put the 100-nF coupling capacitor.
- Provide a control signal for the SEL and OEn pins. It may be necessary to include a 0.01µF to GND on each of these pins to help with noise immunity.
- See the application schematics on recommended decouple capacitors from V_{CC} pins to ground

Copyright © 2018, Texas Instruments Incorporated

9.2.1.3 Application Curves

Figure 10 shows the eye at the input of the HD3SS3202 and Figure 11 at the output of the HD3SS3202.

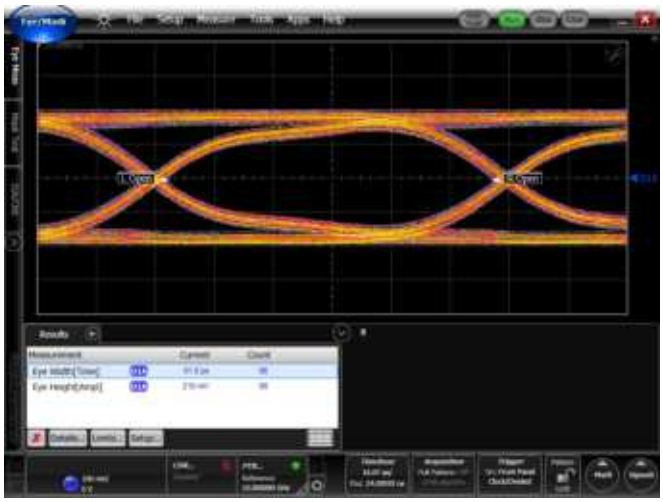

Figure 10. Source 10 Gbps Eye Diagram

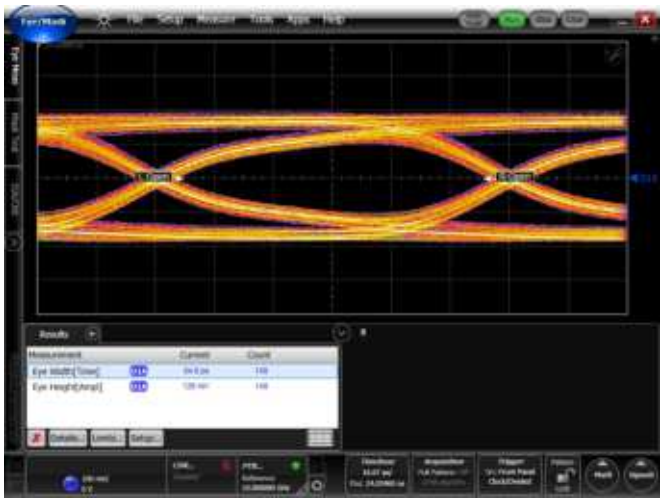

Figure 11. HD3SS3202 10 Gbps Output Eye Diagram

9.3 Systems Examples

9.3.1 Up Facing Port for USB3.1 Type C

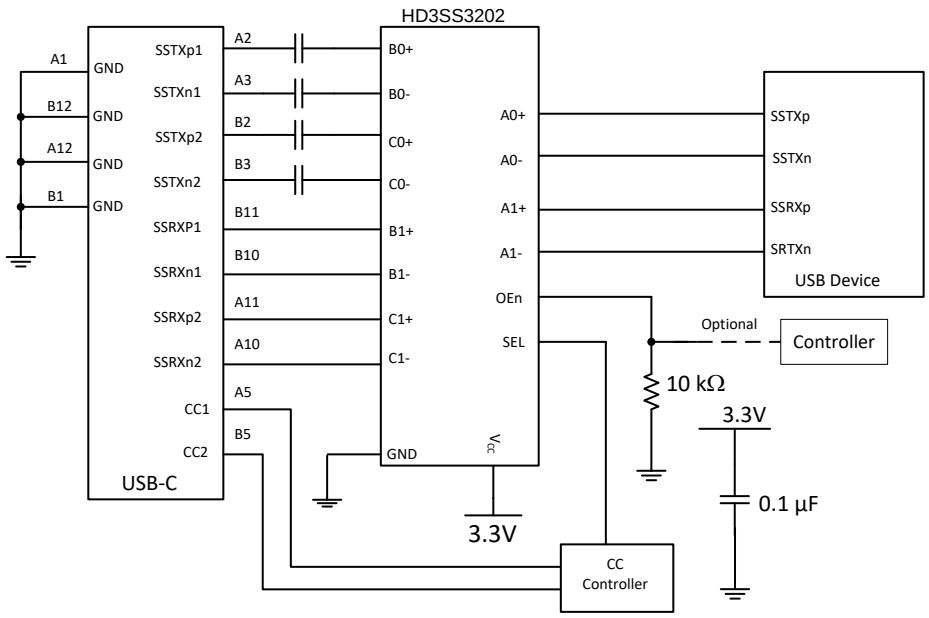

Figure 12. Up Facing Port for USB3.1 USB Type-C Connector

Systems Examples (continued)

9.3.2 PCIE/USB

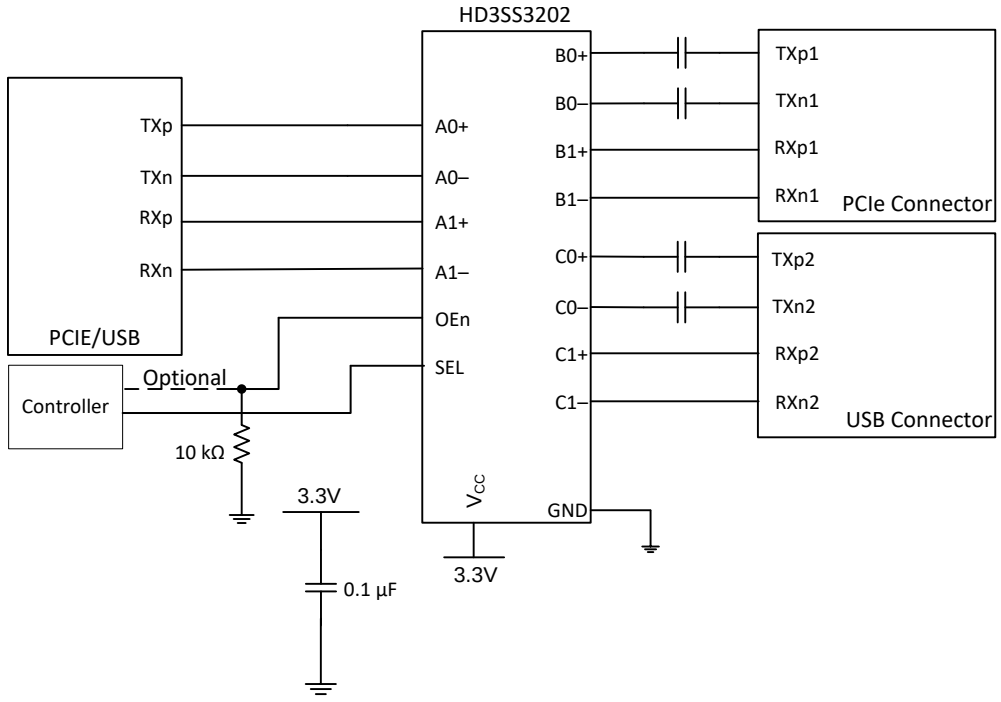

Figure 13. PCIE Motherboard

9.3.3 PCIE/eSATA

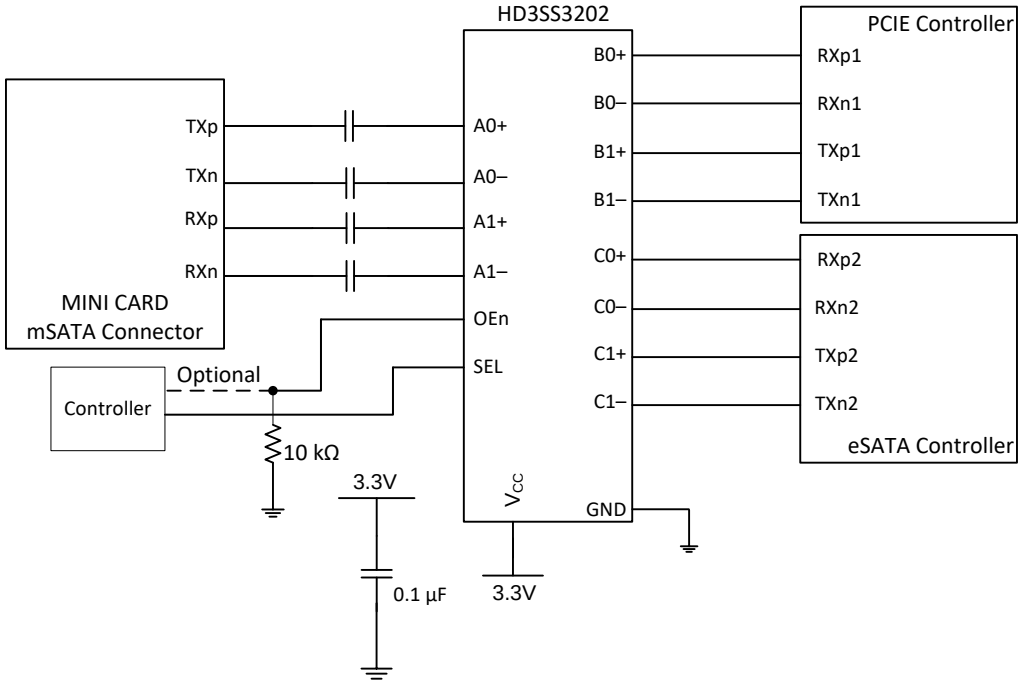

Figure 14. PCIE and eSATA Combo

Copyright © 2018, Texas Instruments Incorporated

Systems Examples (continued)

9.3.4 USB/eSATA

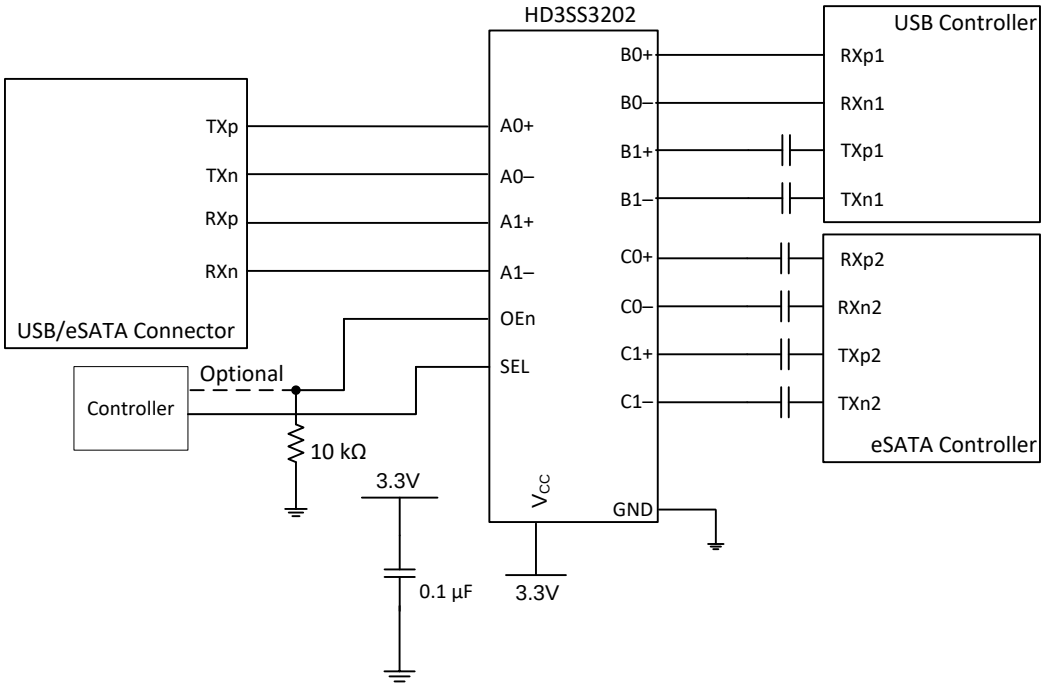

Figure 15. eSATA and USB 3.1 Combo Connector

9.3.5 MIPI Camera Serial Interface

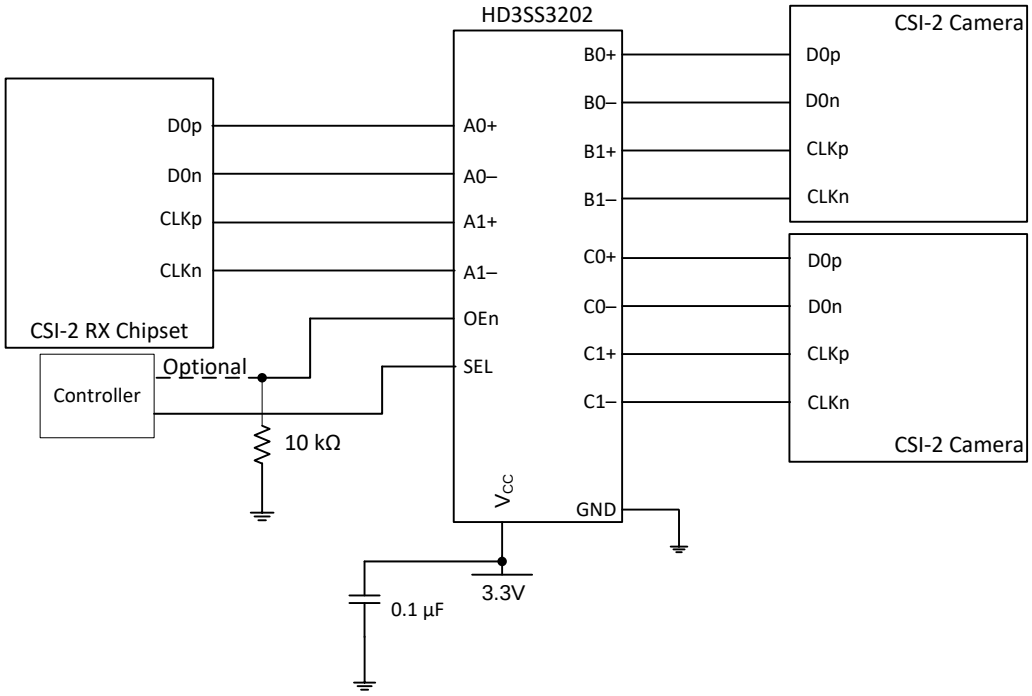

Figure 16. CSI Camera Array

10 Power Supply Recommendations

The HD3SS3202 does not require a power supply sequence. TI recommends placing a 100nF de-coupling capacitor at the device V_{CC} near the pin.

11 Layout

11.1 Layout Guidelines

11.2 Layout Example

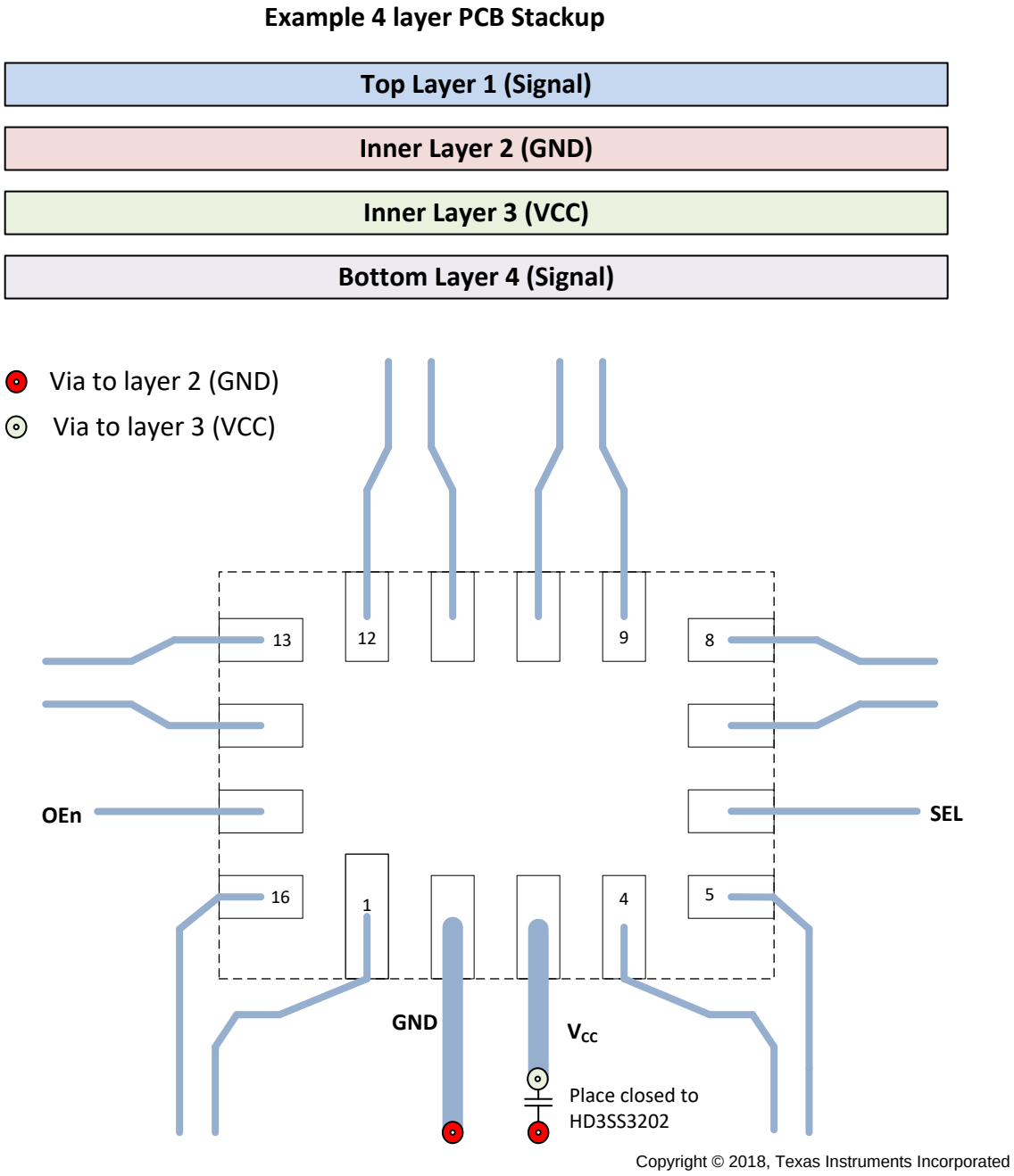

Figure 17. HD3SS3202 Basic Layout Example

Copyright © 2018, Texas Instruments Incorporated

12 Device and Documentation Support

12.1 Receiving Notification of Documentation Updates

To receive notification of documentation updates, navigate to the device product folder on ti.com. In the upper right corner, click on *Alert me* to register and receive a weekly digest of any product information that has changed. For change details, review the revision history included in any revised document.

12.2 Community Resources

The following links connect to TI community resources. Linked contents are provided "AS IS" by the respective contributors. They do not constitute TI specifications and do not necessarily reflect TI's views; see TI's Terms of Use.

TI E2E™ Online Community ***TI's Engineer-to-Engineer (E2E) Community.*** Created to foster collaboration among engineers. At e2e.ti.com, you can ask questions, share knowledge, explore ideas and help solve problems with fellow engineers.

Design Support ***TI's Design Support*** Quickly find helpful E2E forums along with design support tools and contact information for technical support.

12.3 Trademarks

E2E is a trademark of Texas Instruments.

12.4 Electrostatic Discharge Caution



This integrated circuit can be damaged by ESD. Texas Instruments recommends that all integrated circuits be handled with appropriate precautions. Failure to observe proper handling and installation procedures can cause damage.

ESD damage can range from subtle performance degradation to complete device failure. Precision integrated circuits may be more susceptible to damage because very small parametric changes could cause the device not to meet its published specifications.

12.5 Glossary

SLYZ022 — *TI Glossary*.

This glossary lists and explains terms, acronyms, and definitions.

13 Mechanical, Packaging, and Orderable Information

The following pages include mechanical, packaging, and orderable information. This information is the most current data available for the designated devices. This data is subject to change without notice and revision of this document. For browser-based versions of this data sheet, refer to the left-hand navigation.

Copyright © 2018, Texas Instruments Incorporated

PACKAGING INFORMATION

Orderable part number	Status (1)	Material type (2)	Package | Pins	Package qty | Carrier	RoHS (3)	Lead finish/ Ball material (4)	MSL rating/ Peak reflow (5)	Op temp (°C)	Part marking (6)
HD3SS3202IRSVR	Active	Production	UQFN (RSV) | 16	3000 | LARGE T&R	Yes	NIPDAU	Level-1-260C-UNLIM	-40 to 85	3202
HD3SS3202IRSVR.B	Active	Production	UQFN (RSV) | 16	3000 | LARGE T&R	Yes	NIPDAU	Level-1-260C-UNLIM	-40 to 85	3202
HD3SS3202IRSVT	Active	Production	UQFN (RSV) | 16	250 | SMALL T&R	Yes	NIPDAU	Level-1-260C-UNLIM	-40 to 85	3202
HD3SS3202IRSVT.B	Active	Production	UQFN (RSV) | 16	250 | SMALL T&R	Yes	NIPDAU	Level-1-260C-UNLIM	-40 to 85	3202
HD3SS3202RSVR	Active	Production	UQFN (RSV) | 16	3000 | LARGE T&R	Yes	NIPDAU	Level-1-260C-UNLIM	-40 to 85	3202
HD3SS3202RSVR.B	Active	Production	UQFN (RSV) | 16	3000 | LARGE T&R	Yes	NIPDAU	Level-1-260C-UNLIM	0 to 70	3202
HD3SS3202RSVT	Active	Production	UQFN (RSV) | 16	250 | SMALL T&R	Yes	NIPDAU	Level-1-260C-UNLIM	-40 to 85	3202
HD3SS3202RSVT.B	Active	Production	UQFN (RSV) | 16	250 | SMALL T&R	Yes	NIPDAU	Level-1-260C-UNLIM	0 to 70	3202
HD3SS3202RSVTG4.B	Active	Production	UQFN (RSV) | 16	250 | SMALL T&R	Yes	NIPDAU	Level-1-260C-UNLIM	-40 to 85	3202

(1) **Status:** For more details on status, see our product life cycle.

(2) **Material type:** When designated, preproduction parts are prototypes/experimental devices, and are not yet approved or released for full production. Testing and final process, including without limitation quality assurance, reliability performance testing, and/or process qualification, may not yet be complete, and this item is subject to further changes or possible discontinuation. If available for ordering, purchases will be subject to an additional waiver at checkout, and are intended for early internal evaluation purposes only. These items are sold without warranties of any kind.

(3) **RoHS values:** Yes, No, RoHS Exempt. See the TI RoHS Statement for additional information and value definition.

(4) **Lead finish/Ball material:** Parts may have multiple material finish options. Finish options are separated by a vertical ruled line. Lead finish/Ball material values may wrap to two lines if the finish value exceeds the maximum column width.

(5) **MSL rating/Peak reflow:** The moisture sensitivity level ratings and peak solder (reflow) temperatures. In the event that a part has multiple moisture sensitivity ratings, only the lowest level per JEDEC standards is shown. Refer to the shipping label for the actual reflow temperature that will be used to mount the part to the printed circuit board.

(6) **Part marking:** There may be an additional marking, which relates to the logo, the lot trace code information, or the environmental category of the part.

Multiple part markings will be inside parentheses. Only one part marking contained in parentheses and separated by a "~" will appear on a part. If a line is indented then it is a continuation of the previous line and the two combined represent the entire part marking for that device.

Important Information and Disclaimer: The information provided on this page represents TI's knowledge and belief as of the date that it is provided. TI bases its knowledge and belief on information provided by third parties, and makes no representation or warranty as to the accuracy of such information. Efforts are underway to better integrate information from third parties. TI has taken and continues to take reasonable steps to provide representative

and accurate information but may not have conducted destructive testing or chemical analysis on incoming materials and chemicals. TI and TI suppliers consider certain information to be proprietary, and thus CAS numbers and other limited information may not be available for release.

In no event shall TI's liability arising out of such information exceed the total purchase price of the TI part(s) at issue in this document sold by TI to Customer on an annual basis.

TAPE AND REEL INFORMATION

REEL DIMENSIONS

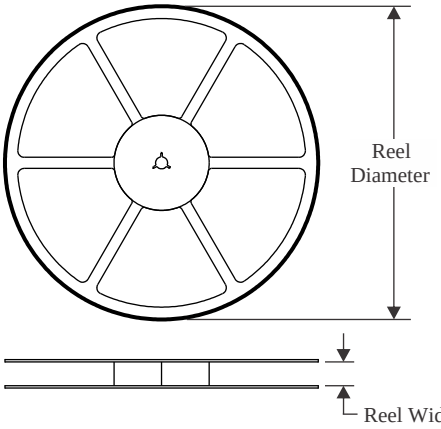

TAPE DIMENSIONS

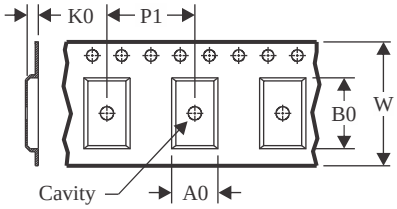

A0	Dimension designed to accommodate the component width
B0	Dimension designed to accommodate the component length
K0	Dimension designed to accommodate the component thickness
W	Overall width of the carrier tape
P1	Pitch between successive cavity centers

QUADRANT ASSIGNMENTS FOR PIN 1 ORIENTATION IN TAPE

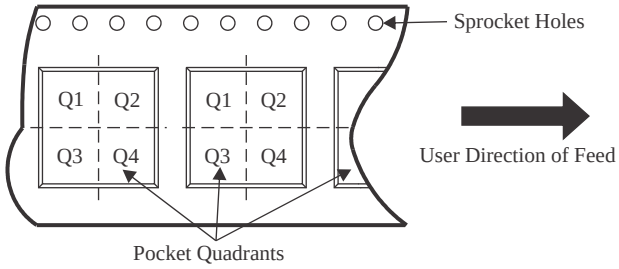

*All dimensions are nominal

Device	Package Type	Package Drawing	Pins	SPQ	Reel Diameter (mm)	Reel Width W1 (mm)	A0 (mm)	B0 (mm)	K0 (mm)	P1 (mm)	W (mm)	Pin1 Quadrant
HD3SS3202IRSVR	UQFN	RSV	16	3000	178.0	13.5	2.1	2.9	0.75	4.0	12.0	Q1
HD3SS3202IRSVT	UQFN	RSV	16	250	178.0	13.5	2.1	2.9	0.75	4.0	12.0	Q1
HD3SS3202RSVR	UQFN	RSV	16	3000	178.0	13.5	2.1	2.9	0.75	4.0	12.0	Q1
HD3SS3202RSVT	UQFN	RSV	16	250	178.0	13.5	2.1	2.9	0.75	4.0	12.0	Q1

TAPE AND REEL BOX DIMENSIONS

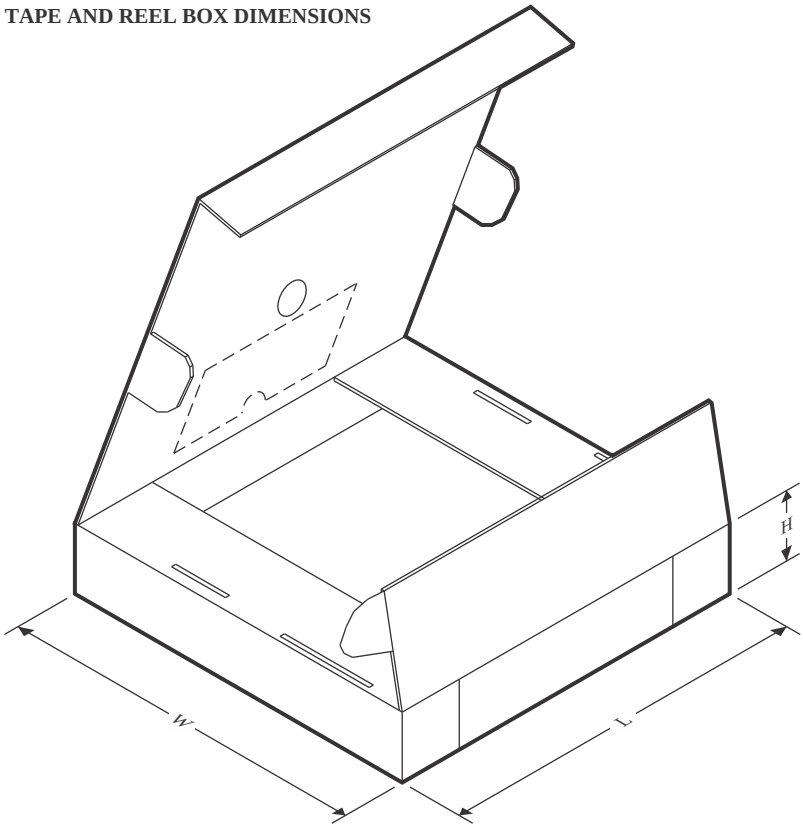

*All dimensions are nominal

Device	Package Type	Package Drawing	Pins	SPQ	Length (mm)	Width (mm)	Height (mm)
HD3SS3202IRSVR	UQFN	RSV	16	3000	189.0	185.0	36.0
HD3SS3202IRSVT	UQFN	RSV	16	250	189.0	185.0	36.0
HD3SS3202RSVR	UQFN	RSV	16	3000	189.0	185.0	36.0
HD3SS3202RSVT	UQFN	RSV	16	250	189.0	185.0	36.0

GENERIC PACKAGE VIEW

RSV 16

UQFN - 0.55 mm max height

1.8 x 2.6, 0.4 mm pitch

ULTRA THIN QUAD FLATPACK - NO LEAD

This image is a representation of the package family, actual package may vary.
Refer to the product data sheet for package details.

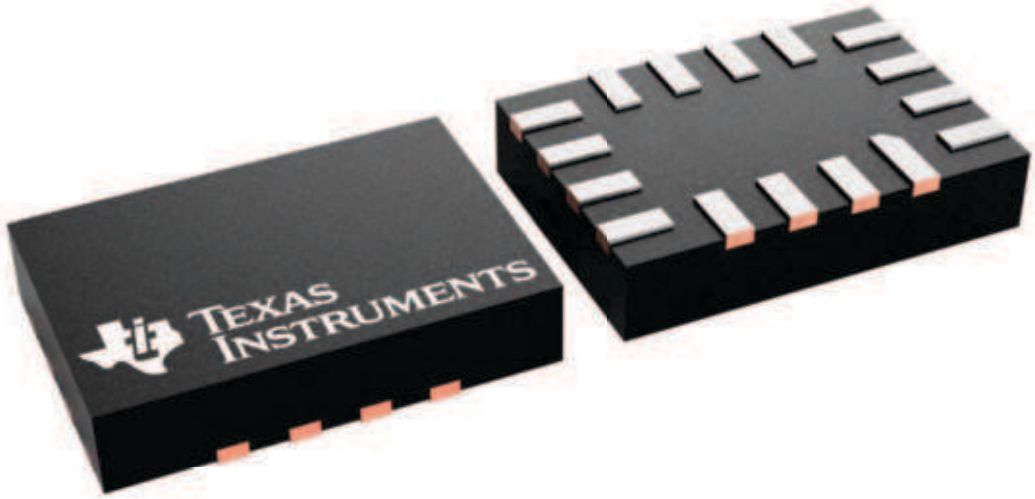

4231225/A

RSV0016A

PACKAGE OUTLINE

UQFN - 0.55 mm max height

ULTRA THIN QUAD FLATPACK - NO LEAD

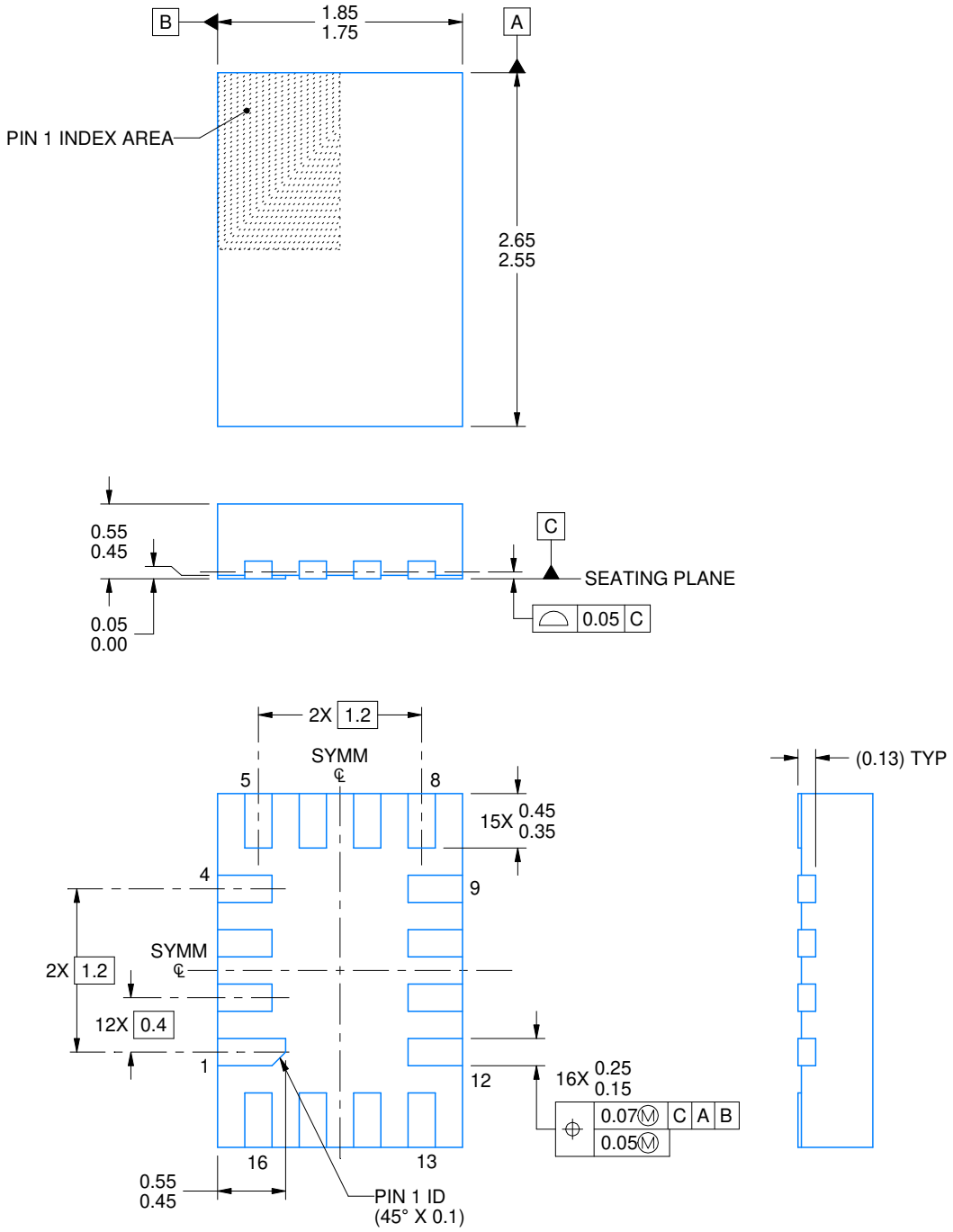

NOTES:

1. All linear dimensions are in millimeters. Any dimensions in parenthesis are for reference only. Dimensioning and tolerancing per ASME Y14.5M.
2. This drawing is subject to change without notice.

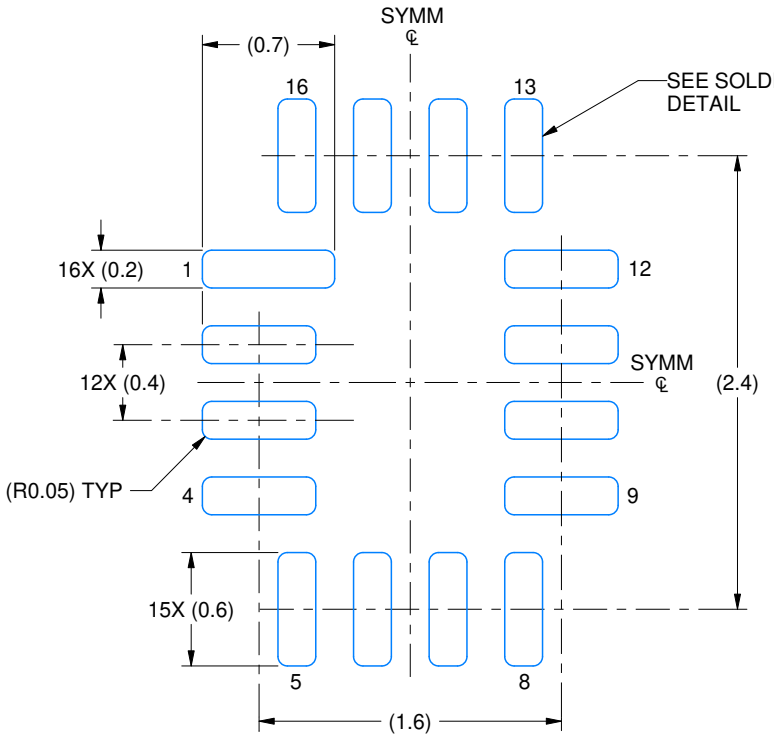

LAND PATTERN EXAMPLE
EXPOSED METAL SHOWN
SCALE: 25X

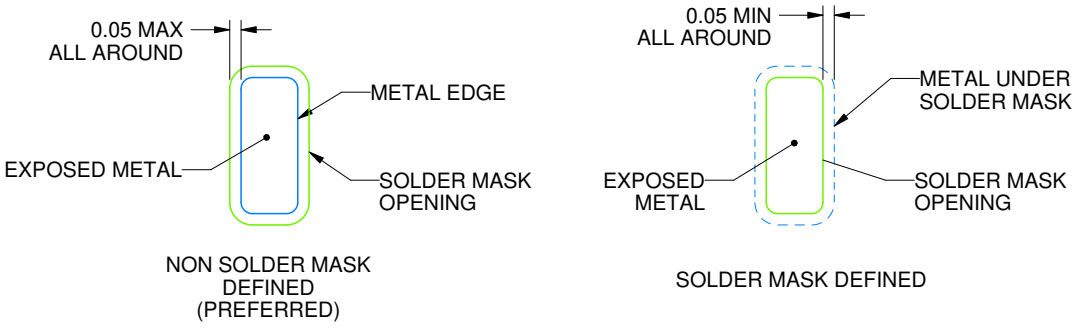

SOLDER MASK DETAILS

4220314/C 02/2020

NOTES: (continued)

3. For more information, see Texas Instruments literature number SLUA271 (www.ti.com/lit/slua271).

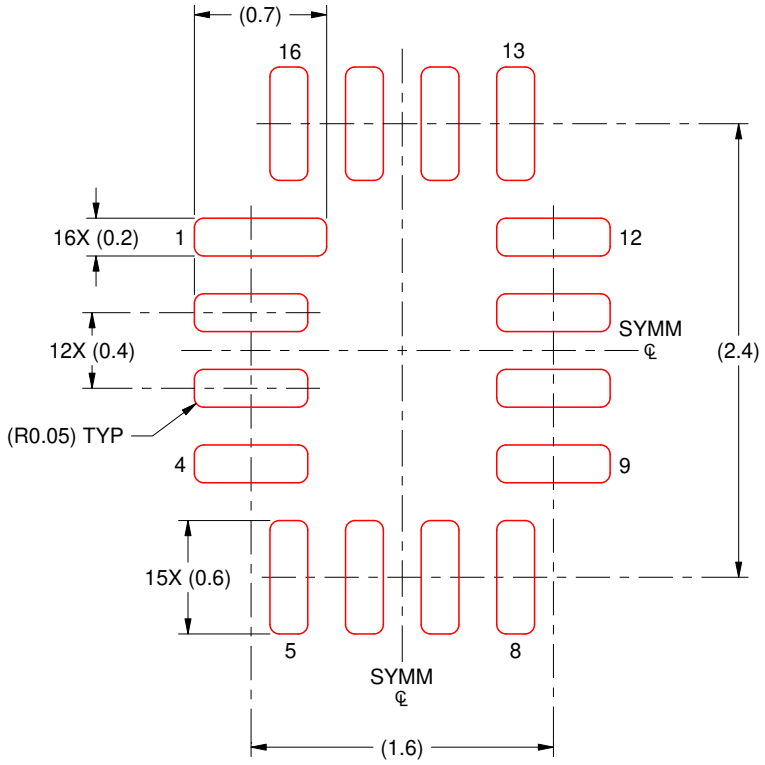

SOLDER PASTE EXAMPLE
BASED ON 0.125 MM THICK STENCIL
SCALE: 25X

4220314/C 02/2020

NOTES: (continued)

4. Laser cutting apertures with trapezoidal walls and rounded corners may offer better paste release. IPC-7525 may have alternate design recommendations.

IMPORTANT NOTICE AND DISCLAIMER

TI PROVIDES TECHNICAL AND RELIABILITY DATA (INCLUDING DATASHEETS), DESIGN RESOURCES (INCLUDING REFERENCE DESIGNS), APPLICATION OR OTHER DESIGN ADVICE, WEB TOOLS, SAFETY INFORMATION, AND OTHER RESOURCES “AS IS” AND WITH ALL FAULTS, AND DISCLAIMS ALL WARRANTIES, EXPRESS AND IMPLIED, INCLUDING WITHOUT LIMITATION ANY IMPLIED WARRANTIES OF MERCHANTABILITY, FITNESS FOR A PARTICULAR PURPOSE OR NON-INFRINGEMENT OF THIRD PARTY INTELLECTUAL PROPERTY RIGHTS.

These resources are intended for skilled developers designing with TI products. You are solely responsible for (1) selecting the appropriate TI products for your application, (2) designing, validating and testing your application, and (3) ensuring your application meets applicable standards, and any other safety, security, regulatory or other requirements.

These resources are subject to change without notice. TI grants you permission to use these resources only for development of an application that uses the TI products described in the resource. Other reproduction and display of these resources is prohibited. No license is granted to any other TI intellectual property right or to any third party intellectual property right. TI disclaims responsibility for, and you fully indemnify TI and its representatives against any claims, damages, costs, losses, and liabilities arising out of your use of these resources.

TI’s products are provided subject to TI’s Terms of Sale, TI’s General Quality Guidelines, or other applicable terms available either on ti.com or provided in conjunction with such TI products. TI’s provision of these resources does not expand or otherwise alter TI’s applicable warranties or warranty disclaimers for TI products. Unless TI explicitly designates a product as custom or customer-specified, TI products are standard, catalog, general purpose devices.

TI objects to and rejects any additional or different terms you may propose.

Copyright © 2026, Texas Instruments Incorporated

Last updated 10/2025