HD3SS460 4 x 6 Channels USB Type-C™ Alternate Mode MUX

1 Features

- Provides MUX Solution for USB Type-C™ Ecosystem Including Alternate Mode (AM)
- Provides Wide Channel Selection Choices Including USBSS and 2 Ch AM, 4 Ch AM
- Compatible with 5 Gbps USB3.1 Gen 1 and AM Including 5.4 Gbps DisplayPort 1.2a
- Compatible for Source/Host and Sink/Device Applications
- Provides Cross-point MUX for Low Speed SBU Pins
- Bidirectional "Mux/De-Mux" Differential Switch
- Supports Common Mode Voltage 0-2 V
- Low Power with 1-μA Shutdown and 0.6 mA Active
- Single Supply Voltage VCC of 3.3 V ±10%
- Industrial Temperature Range of –40 to 85°C

2 Applications

- Flippable USB Type-C™ Ecosystem
- Tablets, Laptops, Monitors, Phones
- USB Host and Devices
- Docking Stations

3 Description

The HD3SS460 is a high-speed bi-directional passive switch in mux or demux configurations. Based on control pin POL the device provides switching to accommodate connector flipping. The device also provides muxing between 2Ch Data / 2Ch Video and all 4Ch Video based on control pin AMSEL.

The device also provides cross points MUX for low speed pins as needed in flippable connector implementation.

The HD3SS460 is a generic analog differential passive switch that can work for any high speed interface applications as long as it is biased at a common mode voltage range of 0-2V and has differential signaling with differential amplitude up to 1800mVpp. It employs an adaptive tracking that ensures the channel remains unchanged for entire common mode voltage range.

Excellent dynamic characteristics of the device allow high speed switching with minimum attenuation to the signal eye diagram with very little added jitter. It consumes <2 mW of power when operational and <5μW in shutdown mode, exercisable by EN pin.

Device Information(1)

PART NUMBER	PACKAGE	BODY SIZE (NOM)
HD3SS460	QFN (RHR) (28)	3.50 mm × 5.50 mm
HD3SS460I		
HD3SS460	QFN (RNH) (30)	2.50 mm × 4.50 mm
HD3SS460I		

(1) For all available packages, see the orderable addendum at the end of the data sheet.

Simplified Schematic

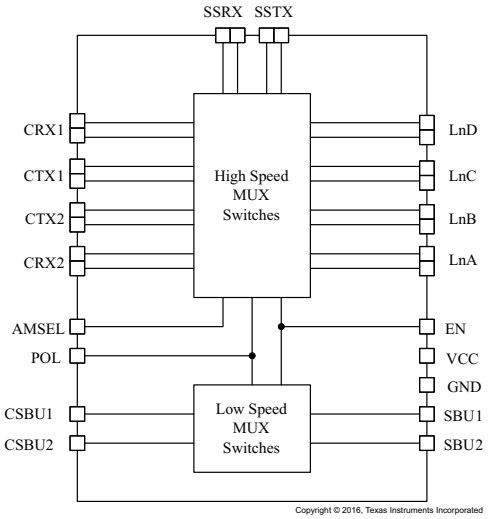

Application

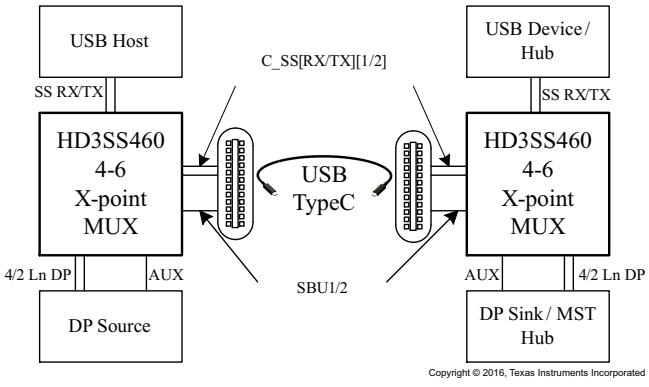

An IMPORTANT NOTICE at the end of this data sheet addresses availability, warranty, changes, use in safety-critical applications, intellectual property matters and other important disclaimers. PRODUCTION DATA.

Table of Contents

1 Features ... 1
2 Applications ... 1
3 Description ... 1
4 Revision History ... 2
5 Device Comparison Table ... 4
6 Pin Configuration and Functions ... 5
7 Specifications ... 6
7.1 Absolute Maximum Ratings ... 6
7.2 ESD Ratings ... 6
7.3 Recommended Operating Conditions ... 6
7.4 Thermal Information ... 6
7.5 Electrical Characteristics ... 7
7.6 High Speed Port Performance Parameters ... 8
7.7 High Speed Signal Path Switching Characteristics ... 8
8 Detailed Description ... 10
8.1 Overview ... 10
8.2 Functional Block Diagram ... 10
8.3 Feature Description ... 11
8.4 Device Functional Modes ... 11
9 Application and Implementation ... 14
9.1 Application Information ... 14
9.2 USB SS and DP as Alternate Mode ... 14
10 Power Supply Recommendations ... 23
11 Layout ... 24
11.1 Layout Guidelines ... 24
11.2 Layout Example ... 25
12 Device and Documentation Support ... 27
12.1 Receiving Notification of Documentation Updates 27
12.2 Community Resources ... 27
12.3 Trademarks ... 27
12.4 Electrostatic Discharge Caution ... 27
12.5 Glossary ... 27
13 Mechanical, Packaging, and Orderable Information ... 27

4 Revision History

NOTE: Page numbers for previous revisions may differ from page numbers in the current version.

Changes from Revision C (December 2016) to Revision D — **Page**

- Deleted R187 from Figure 16 ... 21
- Deleted R187 from Figure 19. ... 23

Changes from Revision B (June 2016) to Revision C — **Page**

- Added QFN (RNH) (30) to the *Device Information* table ... 1
- Added the RNH package option to the *Device Comparison Table* table ... 4
- Added the RNH package option to the *Pin Configuration and Functions* section ... 5
- Changed the Description of pins LnBn, p, LnCn, p, LnDn, p, SSTXn, p, and SSRXn, p From: positive, negative To: negative, positive in the *Pin Functions* table ... 5
- Changed the Supply voltage MIN value From: 3.0 V To: 2.7 V in the *Recommended Operating Conditions* table ... 6
- Added the RNH package option to the *Thermal Information* table ... 6
- Changed V_{IH} to include a separate line entry for POL pin in the *Electrical Characteristics* table ... 7

Changes from Revision A (March 2015) to Revision B — **Page**

- Changed text and Figure 3, Figure 4 in the USB SS and DP as Alternate Mode section for clarity. ... 14
- Added Figure 5 ... 15
- Added Figure 6 ... 16
- Deleted Table *Pin Assignments for DP Source Pins and DP Sink Pins* in the *Detailed Design Procedure* section ... 17
- Added Table 2, Table 3, Table 4, and Table 5 ... 17
- Added Figure 8 through Figure 13 ... 17
- Changed image for Figure 16 ... 21
- Changed image for Figure 19. ... 23

Copyright © 2015–2017, Texas Instruments Incorporated

Changes from Original (January 2015) to Revision A **Page**

- Added full data sheet specification complement 6

Copyright © 2015–2017, Texas Instruments Incorporated

5 Device Comparison Table(1)

OPERATING TEMPERATURE (°C)	PART NUMBER	PINS	TOP-SIDE MARKING
0 to 70	HD3SS460RHR	28	3SS460
–40 to 85	HD3SS460IRHR	28	3SS460I
0 to 70	HD3SS460RNH	30	460RNH
–40 to 85	HD3SS460IRNH	30	460IRNH

(1) For all available packages, see the orderable addendum at the end of the data sheet. Package drawings, thermal data, and symbolization are available at www.ti.com/packaging

Copyright © 2015–2017, Texas Instruments Incorporated

6 Pin Configuration and Functions

RHR Package With Thermal Pad (28-Pin WQFN) Top View

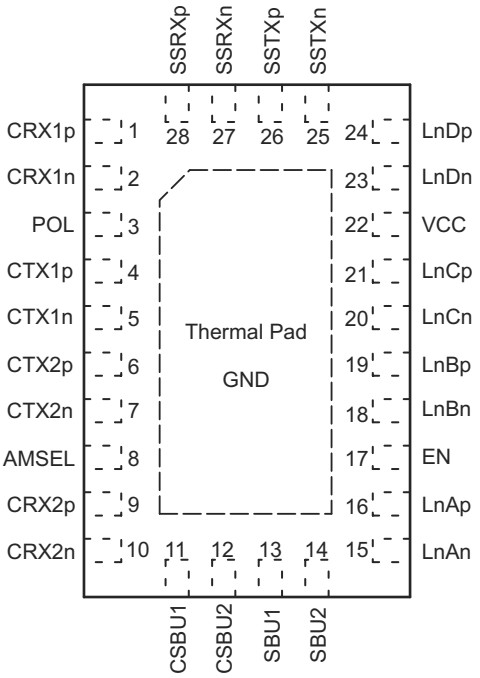

RNH Package With Thermal Pad (30-Pin WQFN) Top View

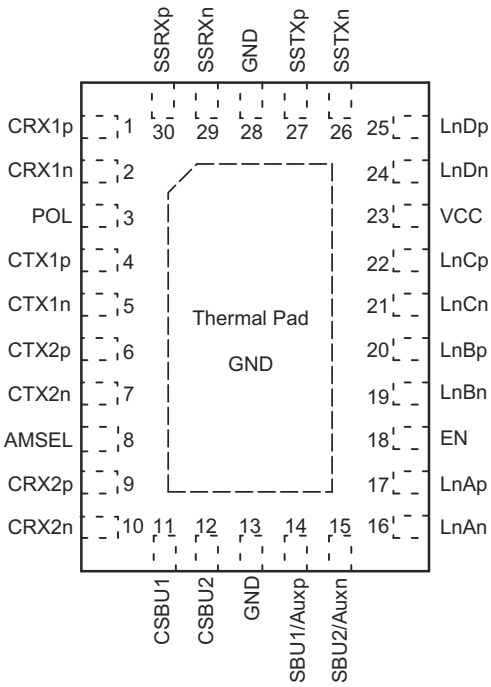

Pin Functions

PIN			TYPE(1)	DESCRIPTION
NAME	RHR NO.	RNH NO.		
VCC	22	23	P	Power
GND	PAD	13, 28, PAD	G	Ground
POL	3	3	Input	Provides MUX control (Table 1)
AMSEL	8	8	3-Level Input	Provides MUX configurations (Table 1)
EN	17	18	3-Level Input	Enable signal; also provides MUX control (Table 1)
CRX1p, n	1, 2	1, 2	I/O	High Speed Signal Port CRX1 positive, negative
CTX1p, n	4, 5	4, 5	I/O	High Speed Signal Port CTX1 positive, negative
CTX2p, n	6, 7	6, 7	I/O	High Speed Signal Port CTX2 positive, negative
CRX2p, n	9, 10	9, 10	I/O	High Speed Signal Port CRX2 positive, negative
LnAn, p	15, 16	16, 17	I/O	High Speed Signal Port LnA positive, negative
LnBn, p	18, 19	19, 20	I/O	High Speed Signal Port LnB negative, positive
LnCn, p	20, 21	21, 22	I/O	High Speed Signal Port LnC negative, positive
LnDn, p	23, 24	24, 25	I/O	High Speed Signal Port LnD negative, positive
SSTXn, p	25, 26	26, 27	I/O	High Speed Signal Port SSTX negative, positive
SSRXn, p	27, 28	29, 30	I/O	High Speed Signal Port SSRX negative, positive
CSBU1, 2	11, 12	11, 12	I/O	Low Speed Signal Port CSBU 1, 2
SBU1, 2	13, 14	14, 15	I/O	Low Speed Signal Port SBU 1, 2

(1) High speed data ports (CRX[1/2][p/n], Ln[A-D][p,n], and SS[T/R]X[p/n]) incorporate 20kΩ pull down resistors that are switched in when a port is not selected and switched out when the port is selected.

Copyright © 2015–2017, Texas Instruments Incorporated

7 Specifications

7.1 Absolute Maximum Ratings

over operating free-air temperature range (unless otherwise noted) (1)

	MIN	MAX	UNIT
Supply Voltage, VCC	–0.5	4	V
Differential High Speed I/O Voltages, C[R/T]X[1/2][p/n], Ln[A-D][p/n], SS[R/T]X[p/n]	–0.5	2.5	V
Low Speed I/O Voltages, CSBU[1/2], SBU[1/2]	–0.5	4	V
Control signal voltages, POL, AMSEL, EN	–0.5	4	V
Storage temperature, T_{stg}	–65	150	°C

(1) Stresses beyond those listed under *Absolute Maximum Ratings* may cause permanent damage to the device. These are stress ratings only, which do not imply functional operation of the device at these or any other conditions beyond those indicated under *Recommended Operating Conditions*. Exposure to absolute-maximum-rated conditions for extended periods may affect device reliability.

7.2 ESD Ratings

		VALUE	UNIT
$V_{(ESD)}$ Electrostatic discharge	Human-body model (HBM), per ANSI/ESDA/JEDEC JS-001 (1)	±4000	V
	Charged-device model (CDM), per JEDEC specification JESD22-C101 (2)	±1000	V

(1) JEDEC document JEP155 states that 500-V HBM allows safe manufacturing with a standard ESD control process. Manufacturing with less than 500-V HBM is possible with the necessary precautions.
(2) JEDEC document JEP157 states that 250-V CDM allows safe manufacturing with a standard ESD control process. Manufacturing with less than 250-V CDM is possible with the necessary precautions.

7.3 Recommended Operating Conditions

over operating free-air temperature range (unless otherwise noted)

			MIN	NOM	MAX	UNIT
V_{CC}	Supply voltage		2.7	3.3	3.6	V
T_A	Operating free air temperature	HD3SS460	0	25	70	°C
		HD3SS460I	–40	25	85	
V_{CM}	High speed port common mode voltage		0		2	V
V_{IN}	Low Speed signal voltage		0		VCC	
Vdiff	High speed port differential voltage		0		1.8	Vpp

7.4 Thermal Information

THERMAL METRIC (1)		HD3SS460		UNIT
		QFN (RNH)	QFN (RHR)	
		30 PINS	28 PINS	
$R_{\theta JA}$	Junction-to-ambient thermal resistance	51.6	44.0	°C/W
$R_{\theta JC(top)}$	Junction-to-case (top) thermal resistance	37.5	34.8	°C/W
$R_{\theta JB}$	Junction-to-board thermal resistance	17.5	14.7	°C/W
ψ_{JT}	Junction-to-top characterization parameter	0.7	0.7	°C/W
ψ_{JB}	Junction-to-board characterization parameter	17.3	24.5	°C/W
$R_{\theta JC(bot)}$	Junction-to-case (bottom) thermal resistance	6.8	6.9	°C/W

(1) For more information about traditional and new thermal metrics, see the *Semiconductor and IC Package Thermal Metrics* application report.

Copyright © 2015–2017, Texas Instruments Incorporated

7.5 Electrical Characteristics

typical values for all parameters are at V_{DD} = 3.3 V and T_A = 25°C (unless otherwise noted)

PARAMETER		TEST CONDITIONS	MIN	TYP	MAX	UNIT
V_{IL}	Input low voltage, control pins POL, AMSEL, EN		–0.1		0.4	V
V_{IH}	Input high voltage, control pins AMSEL, EN		V_{CC} –0.4		V_{CC} +0.1	V
	Input high voltage, control pins POL		1.7		V_{CC} +0.1	V
V_{IM}	Input mid-level voltage, control pins AMSEL, EN		$V_{CC}/2$ –0.3	$V_{CC}/2$	$V_{CC}/2$ +0.3	V
$I_{LK-DIFF-ACTIVE}$	Leakage current on active differential IO pins, VCC = 3.6 V, pin at 0 or 2.4 V.				1	µA
$I_{LK-DIFF-INACTIVE}$	Leakage current on inactive differential IO pins, VCC = 3.6V, pin at 2.4 V.				150	µA
I_{IH}	Input high current, control pins POL, AMSEL, EN and signal pins CSBU1/2, SBU1/2				1	µA
I_{IL}	Input low current, control pins POL, AMSEL, EN and signal pins CSBU1/2, SBU1/2				1	µA
I_{IM}	Input mid-level current, control pins AMSEL, EN				1	µA
I_{OFF}	Device shutdown current			1	5	µA
I_{DD}	Device active current, EN=H or M			0.6	0.9	mA
$R_{ON(HS)}$	Switch ON resistance for high speed differential signals	V_{CC} = 3.3 V, V_{CM} = 0-2 V, I_O = - 8 mA		8	14	Ω
$R_{ON(LS)}$	Switch ON resistance for low speed signals	V_{CC} = 3.3 V, V_{CM} = 0-2 V, I_O = - 8 mA		12		Ω
$R_{FLAT(ON,HS)}$	High speed differential signals' ON resistance flatness for a channel	($R_{ON(MAX)}$ – $R_{ON(MIN)}$) over V_{CM} range V_{CC} = 3.3 V, V_{CM} = 0-2 V, I_O = - 8 mA			1.5	Ω
$C_{ON(HS)}$	High speed differential signals' input capacitance				1	pF

Copyright © 2015–2017, Texas Instruments Incorporated

7.6 High Speed Port Performance Parameters

under recommended operating conditions; R_{LOAD}, R_{SC} = 50 Ω (unless otherwise noted)

PARAMETER			MIN	TYP	MAX	UNIT
RL	Differential return loss	100 Mhz SS Paths		–23		dB
		2.5 Ghz SS Paths		–9		
		100 MHz AM Paths		–23		
		2. 7GHz AM Paths		–13		
IL	Differential insertion loss	100 Mhz SS Paths		–0.7		
		2.5 Ghz SS Paths		–1.6		
		100 MHz AM Paths		–0.7		
		2.7 GHz AM Paths		–1.4		
OI	Differential off isolation	100 Mhz		–50		
		2.5 Ghz		–26		
		2.7 GHz		–25		
Xtalk	Differential cross talk, Between CRX1/2 and CTX1/2	100 Mhz		–80		
		2.5 Ghz		–30		
		2.7 Ghz		–28		
	Differential cross talk, Between CRX1 and CRX2 or CTX1 and CTX2	100 Mhz		–50		
		2.5 Ghz		–26		
		2.7 Ghz		–25		
BW_{SS}	Differential –3 dB BW SS Paths			4.2		GHz
BW_{AM}	Differential –3 dB BW AM Paths			5.4		
BW_{SBU}	Low-speed switch –3 dB BW			500		MHz

7.7 High Speed Signal Path Switching Characteristics

PARAMETER		TEST CONDITION	MIN	TYP	MAX	UNIT
t_{PD}	Switch propagation delay	R_{SC} and R_{LOAD} = 50 Ω, Figure 2			100	ps
$t_{SK(O)}$	Inter-Pair output skew (CH-CH)				50	
$t_{SK(b-b)}$	Intra-Pair output skew (bit-bit)				5	
t_{ON}	Control signals POL, AMSEL and EN (H/M toggle) to switch ON time	R_{SC} and R_{LOAD} = 50 Ω, Figure 1			3	µs
t_{OFF}	Control signals POL, AMSEL and EN (H/M toggle) to switch OFF time				1	

Timing Diagrams

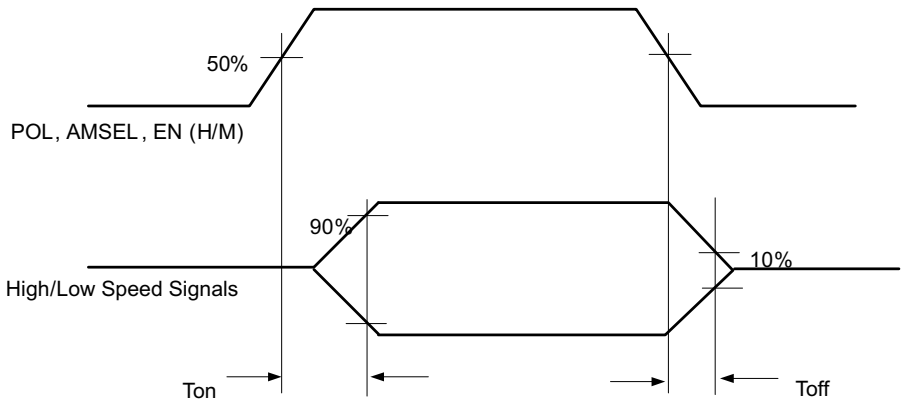

Figure 1. Switch ON/OFF Time

Copyright © 2015–2017, Texas Instruments Incorporated

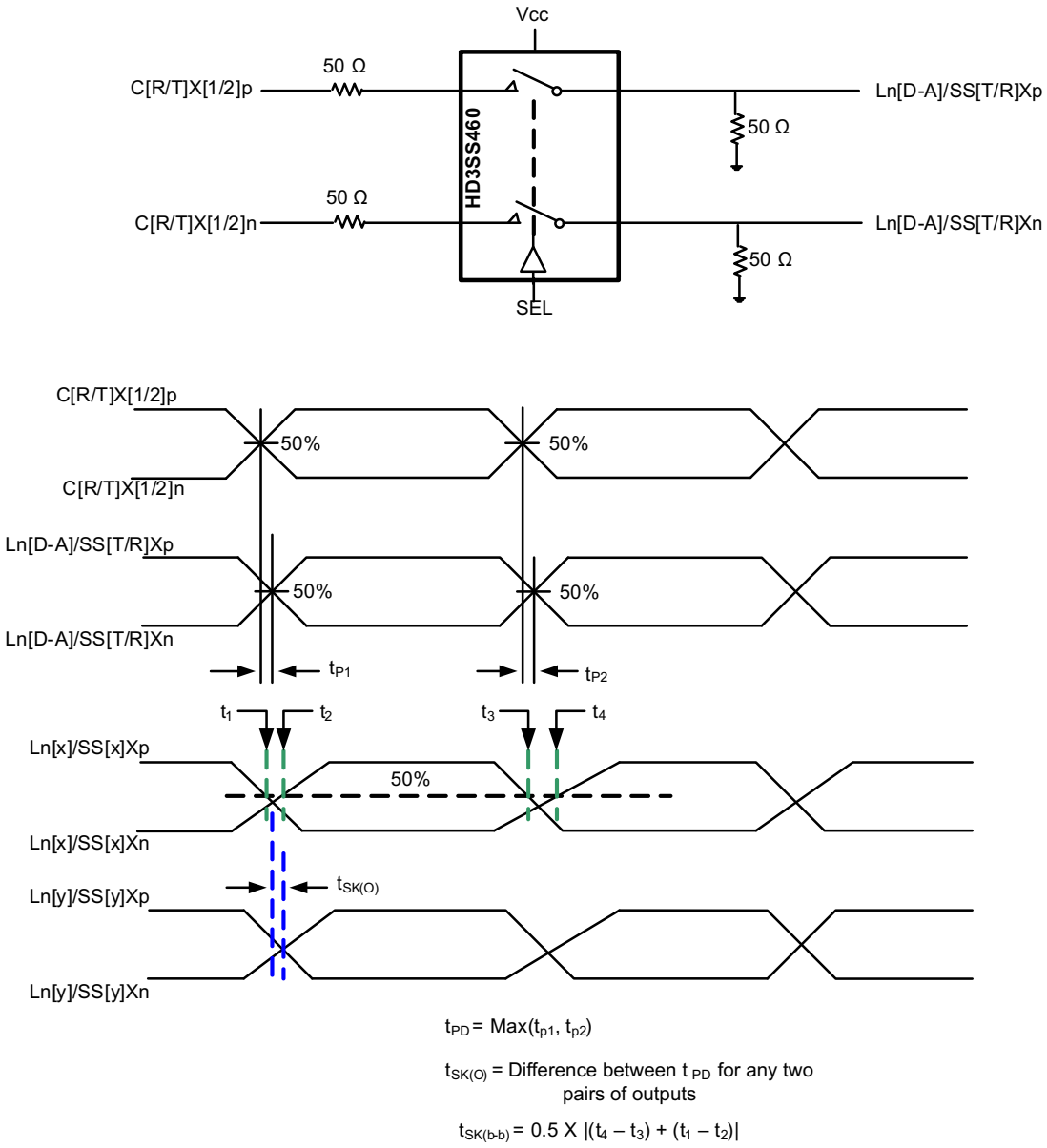

t_{PD} = Max(t_{p1}, t_{p2})

$t_{SK(O)}$ = Difference between t_{PD} for any two pairs of outputs

$t_{SK(b-b)}$ = 0.5 X |(t_4 – t_3) + (t_1 – t_2)|

Figure 2. Propagation Delay and Skew

Copyright © 2015–2017, Texas Instruments Incorporated

8 Detailed Description

8.1 Overview

The HD3SS460 is a high-speed bi-directional passive 4-6 cross-point switch in mux or demux configurations. Based on control pin POL the device provides switching to accommodate USB Type-C plug flipping. The device provides multiple signal switching options that allow system implementation flexibility.

The HD3SS460 is a generic analog, differential passive switch that can work for any high speed interface applications as long as it is biased at a common mode voltage range of 0-2 V and has differential signaling with differential amplitude up to 1800 mVpp. It employs an adaptive tracking that ensures the channel remains unchanged for entire common mode voltage range

Excellent dynamic characteristics of the device allow high speed switching with minimum attenuation to the signal eye diagram with very little added jitter.

8.2 Functional Block Diagram

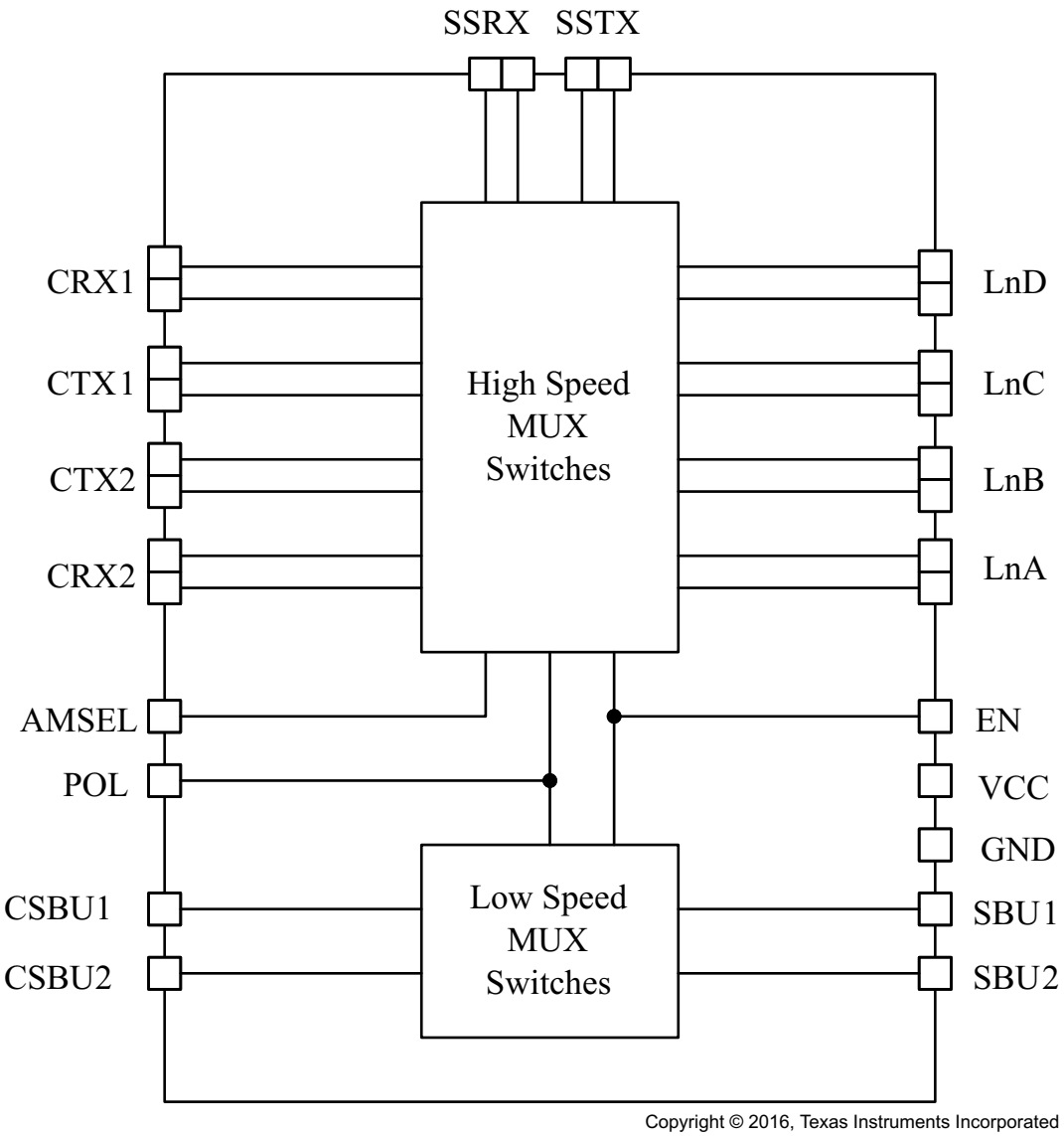

Copyright © 2016, Texas Instruments Incorporated

Copyright © 2015–2017, Texas Instruments Incorporated

8.3 Feature Description

8.3.1 High Speed Differential Signal Switching

Based on control pin AMSEL the device provides muxing options of:

1. 1 port (RX and TX) USB3.1 SS data / 2Ch video (or any other Alternate Mode data)
2. All 4Ch video (or any other Alternate Mode data)
3. 1 port (RX and TX) USB3.1 SS data
4. 1 port (RX and TX) USB3.1 SS data / 2Ch video (or any other Alternate Mode data) with option of choosing video from two different source/sink
5. 1 port (RX and TX) USB3.1 SS data / 2Ch video (or any other Alternate Mode data) with option of choosing video 2 Ln Video or 1 Ln Video from two different source/sink

8.3.2 Low Speed SBU Signal Switching

The device also provides cross point muxing for low speed SBU signals as needed in USB Type-C flippable connector implementation. The device provides the option to choose the USB only implementation where SBU ports are in tri-state.

8.3.3 Output Enable and Power Savings

The HD3SS460 has two power modes, active/normal operating mode and standby/shutdown mode. During standby mode, the device consumes very little current to save the maximum power. To enter standby mode, the EN control pin is pulled low and must remain low. For active/normal operation, the EN control pin should be pulled high to VDD through a resistor or dynamically controlled to switch between H or M.

HD3SS460 consumes <2 mW of power when operational and <5 µW in shutdown mode, exercisable by the EN pin.

8.4 Device Functional Modes

8.4.1 Device High Speed Switch Control Modes

Table 1. MUX Control for High Speed and Low Speed SBU Channels

POL	AMSEL	EN	CONFIGURATIONS	HIGH SPEED SIGNAL FLOW(1)	SBU SIGNAL FLOW
L	L	H	2CH USBSS + 2CH AM (Normal)	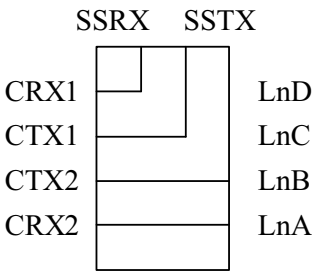	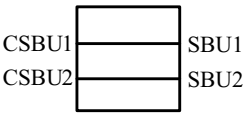
H	L	H	2CH USBSS + 2CH AM (Flipped)	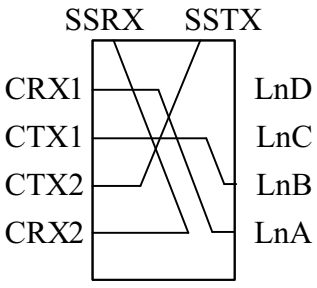	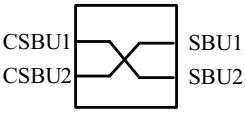

(1) All positive signals connect to positive and negative to negative

Copyright © 2015–2017, Texas Instruments Incorporated

Device Functional Modes (continued)

Table 1. MUX Control for High Speed and Low Speed SBU Channels (continued)

POL	AMSEL	EN	CONFIGURATIONS	HIGH SPEED SIGNAL FLOW(1)	SBU SIGNAL FLOW
L	H	H	4CH AM (Normal)	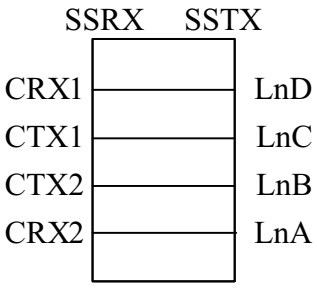	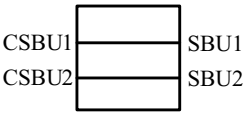
H	H	H	4CH AM (Flipped)	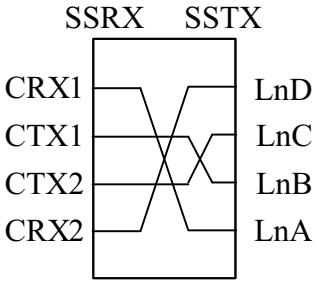	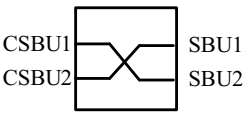
L	M	H	2CH USBSS (Normal)	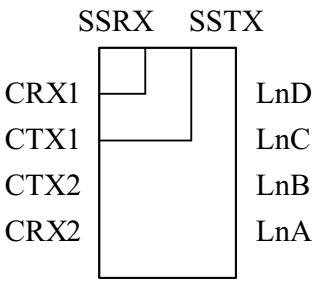	All Low Speed SBU Ports HighZ
H	M	H	2CH USBSS (Flipped)	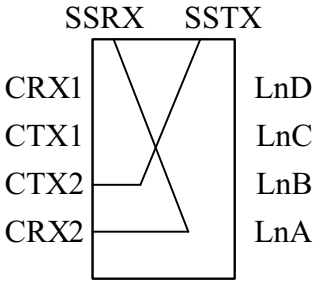	All Low Speed SBU Ports HighZ
L	M	M	2CH USBSS + 2CH AM (Normal)	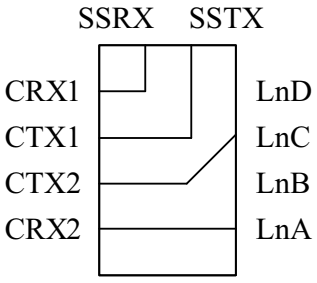	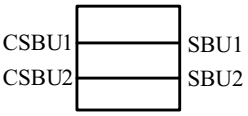

Copyright © 2015–2017, Texas Instruments Incorporated

Device Functional Modes (continued)

Table 1. MUX Control for High Speed and Low Speed SBU Channels (continued)

POL	AMSEL	EN	CONFIGURATIONS	HIGH SPEED SIGNAL FLOW(1)	SBU SIGNAL FLOW
H	M	M	2CH USBSS + 2CH AM (Flipped)	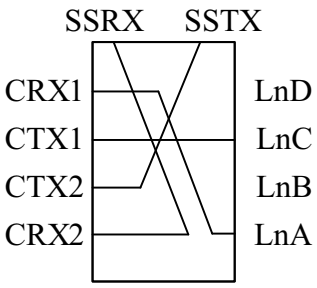	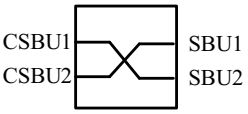
L	L	M	2CH USBSS + 2CH AM from alternate GPU (Normal)	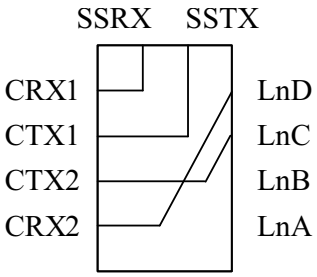	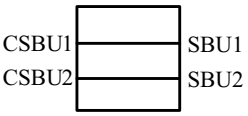
H	L	M	2CH USBSS + 2CH AM from alternate GPU (Flipped)	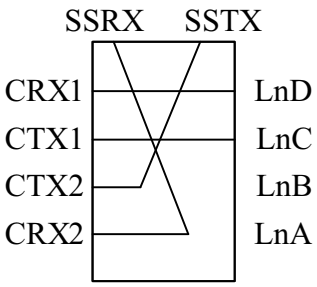	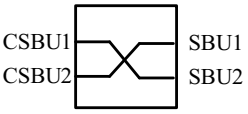
L	H	M	Reserved	Reserved	Reserved
H	H	M	Reserved	Reserved	Reserved
X	X	L	All High Speed Ports HighZ	All High Speed Ports HighZ	All Low Speed SBU Ports HighZ

9 Application and Implementation

NOTE

Information in the following applications sections is not part of the TI component specification, and TI does not warrant its accuracy or completeness. TI's customers are responsible for determining suitability of components for their purposes. Customers should validate and test their design implementation to confirm system functionality.

9.1 Application Information

HD3SS460 can be utilized for a wide range of muxing needs. This is general purpose passive cross-point switch. The channels have independent adaptive common mode tracking allowing flexibility. As long as recommended electrical use conditions are met the device can be used number of ways as described in Table 1.

NOTE

HD3SS460 does not provide common mode biasing for the channel. Therefore it is required that the device is biased from either side for all active channels.

9.2 USB SS and DP as Alternate Mode

HD3SS460 can be used USB Type-C ecosystem with DP as alternate mode in two distinct application configurations – one is for DP Source/USB Host, the other one for the DP Sink/USB Device/Dock. Figure 3 and Figure 4 illustrate typical application block diagrams for these two cases. Detail schematics are illustrated in Detailed Design Procedure section. Other applications and or use cases possible where these examples can be used as general guidelines.

Figure 3 and Figure 4 depict the AC coupling capacitor placement examples. TI recommends placing the capacitors as shown in the illustrations for the backward compatibility and interoperability purposes as some of the existing USB systems may present Vcm, exceeding the typical range of 0–2 V on SS differential pairs.

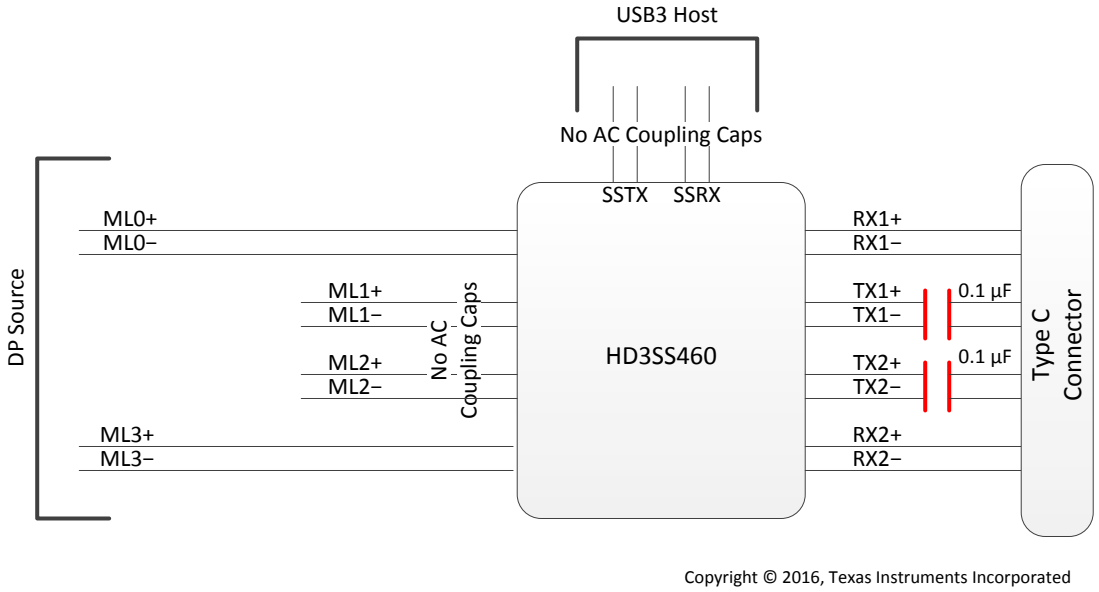

Figure 3. Block Diagram for a Type C Interface Using DP as Alternate Mode – Source/Host

Copyright © 2015–2017, Texas Instruments Incorporated

USB SS and DP as Alternate Mode (continued)

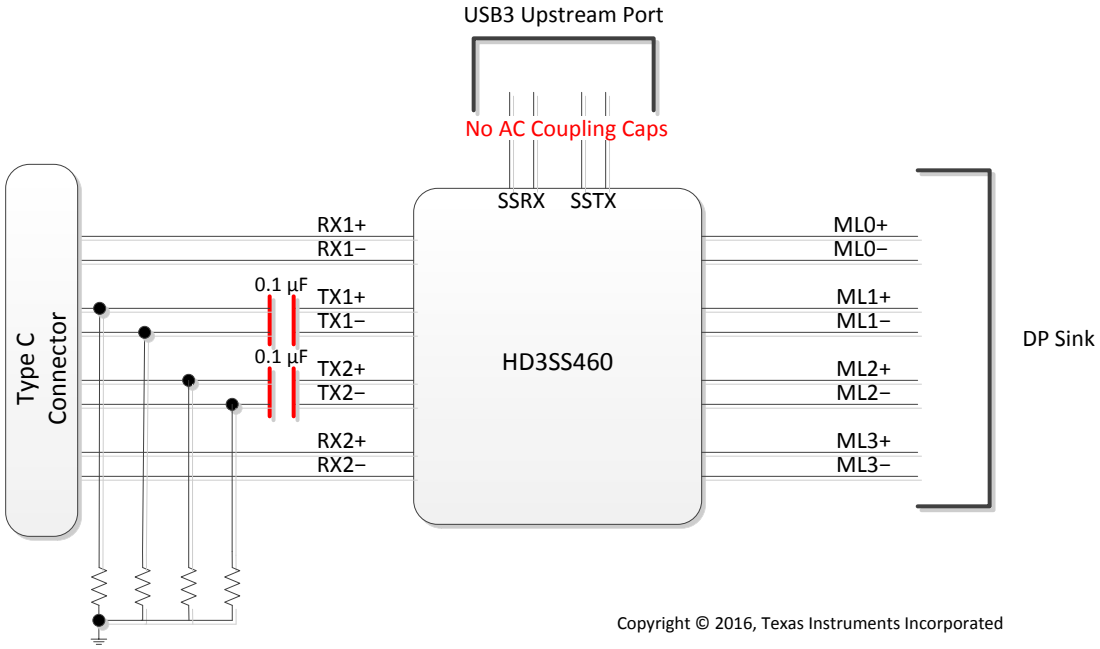

Figure 4. Diagram for a Type C Interface Using DP as Alternate Mode – Sink/Device/Dock

Figure 5 and Figure 6 depict the AC coupling capacitor recommendations in case the upstream or downstream port connected internally to the HD3SS460 presents Vcm greater than 2 V.

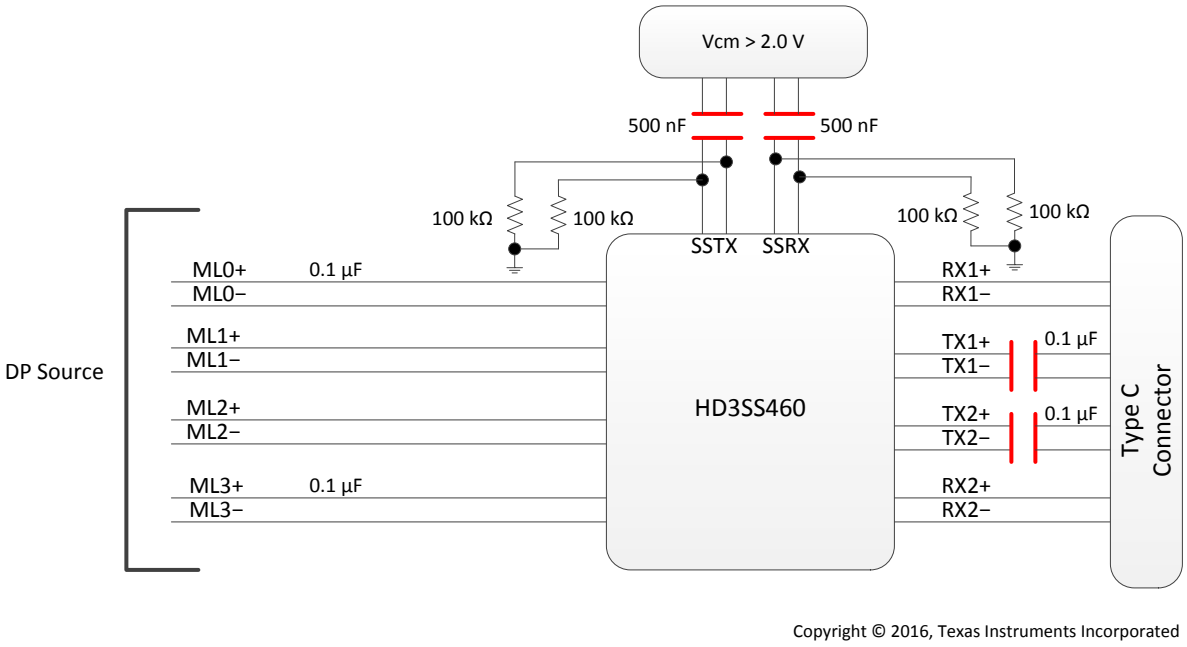

Figure 5. HD3SS460 USB Host (DP Source with SS USB Vcm)

USB SS and DP as Alternate Mode (continued)

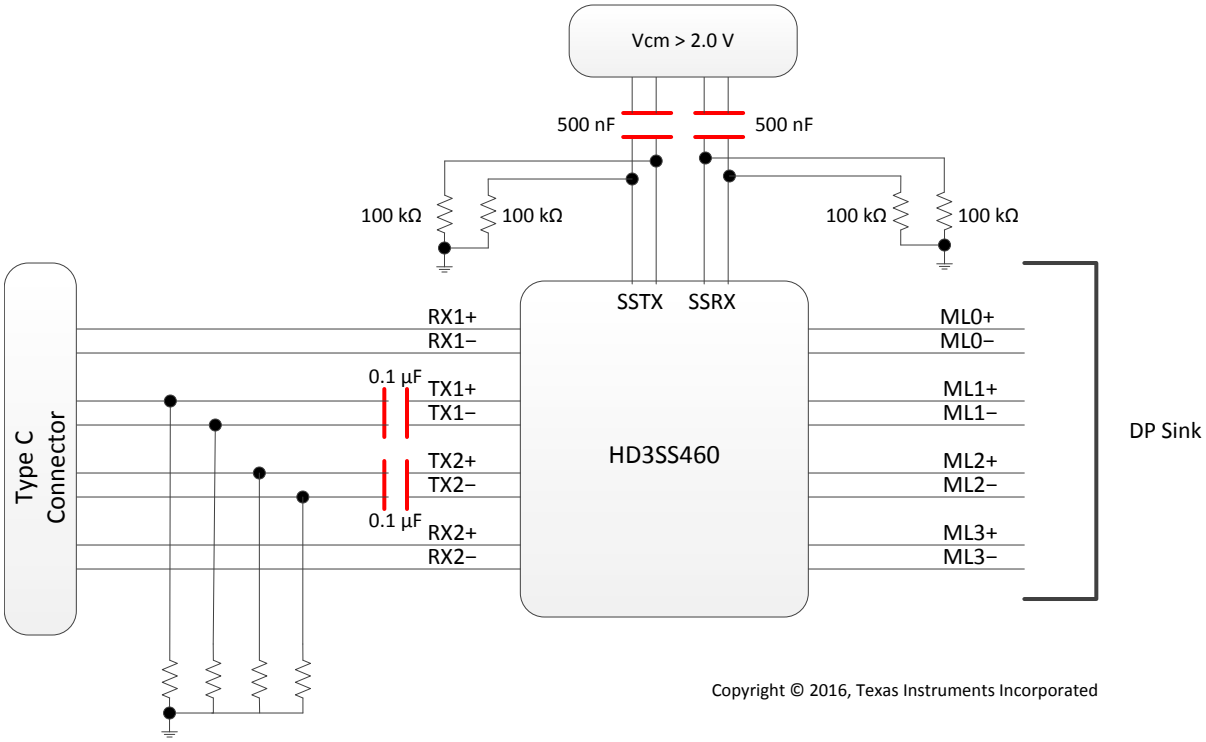

Figure 6. HD3SS460 USB Upstream (DP Sink Implementation Example)

9.2.1 Design Requirements

DESIGN PARAMETERS	EXAMPLE VALUES
VCC	3.3 V
Decoupling capacitors	0.1 µF
AC Capacitors	75-200nF (100nF shown) USBSS TX p and n lines require AC capacotprs. Alternate mode signals may or may not require AC capacitors
Control pins	Controls pins can be dynamically controlled or pin-strapped. The POL signal is controlled by CC logic in the Type-C ecosystem.

Copyright © 2015–2017, Texas Instruments Incorporated

9.2.2 Detailed Design Procedure

The reference schematics shown in this document are based upon the pin assignment defined in the Alternate mode over Type C specification as shown in Figure 7 below.

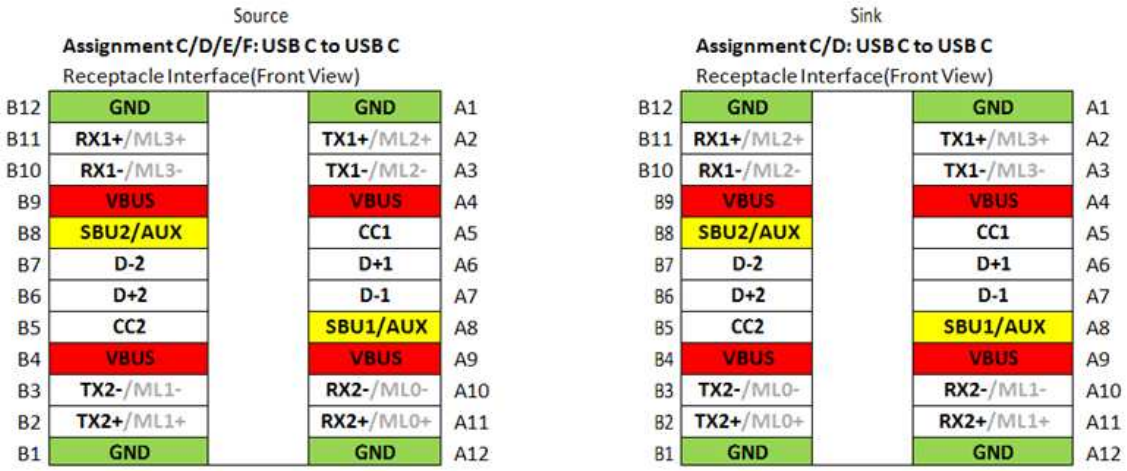

Figure 7. Pin Assignment – Alternate Mode Over Type C

Table 2 represents the example pin mapping to HD3SS460 for the DP Source pin assignments C, D, E and F, DP Sink pin assignments C and D.

Table 2. SOURCE Pin Assignment Option C and E (AMSEL = H, EN = H)

RECEPTACLE PIN NUMBER	460 PIN MAPPING TO TYPE C CONNECTOR	460 PIN MAPPING TO DP SOURCE (GPU)	
		POL = L	POL = H
A11/10	CRX2	LnA(ML0)	LnD(ML3)
A2/3	CTX1	LnC(ML2)	LnB(ML1)
B11/10	CRX1	LnD(ML3)	LnA(ML0)
B2/3	CTX2	LnB(ML1)	LnC(ML2)
A8	CSBU1	SBU1(AUXP)	SBU2(AUXN)
B8	CSBU2	SBU2(AUXN)	SBU1(AUXP)

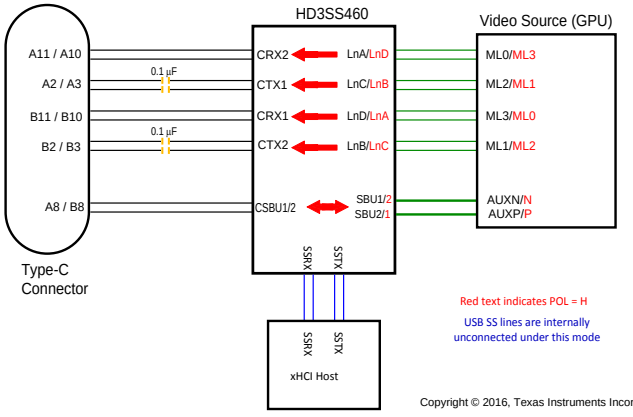

Figure 8. SOURCE Pin Assignment Option C and E (AMSEL = H, EN = H)

Table 3. SOURCE Pin Assignment Option D and F (AMSEL = L, EN = H)

RECEPTACLE PIN NUMBER	460 PIN MAPPING TO TYPE C CONNECTOR	460 PIN MAPPING TO DP SOURCE (GPU)	
		POL = L	POL = H
A11/10	CRX2	LnA(ML0)	SSRX
A2/3	CTX1	SSTX	LnB(ML1)
B11/10	CRX1	SSRX	LnA(ML0)
B2/3	CTX2	LnB(ML1)	SSTX
A8	CSBU1	SBU1(AUXP)	SBU2(AUXN)
B8	CSBU2	SBU2(AUXN)	SBU1(AUXP)

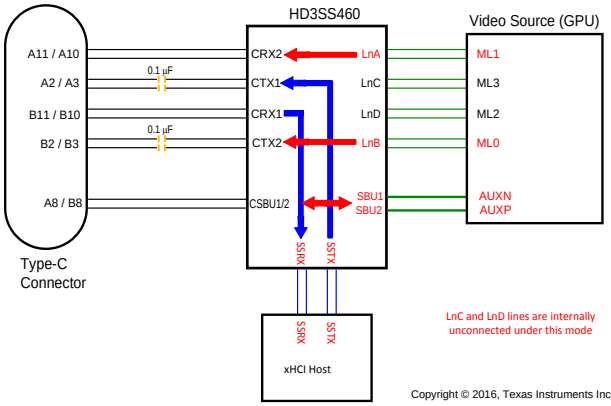

Figure 9. SOURCE Pin Assignment Option D and F (AMSEL = L, EN = H, POL = L)

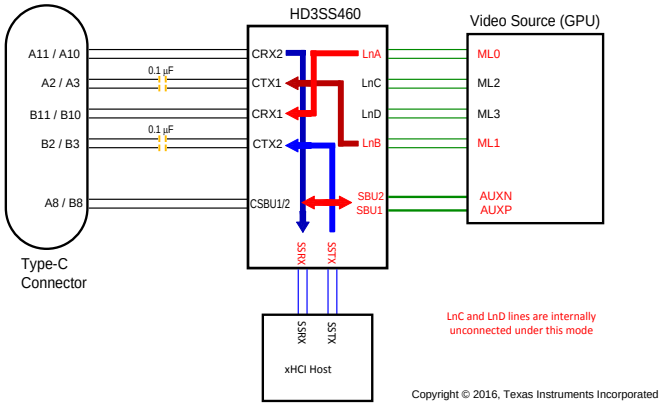

Figure 10. SOURCE Pin Assignment Option D and F (AMSEL = L, EN = H, POL = H)

Table 4. SINK Pin Assignment Option C (AMSEL = H, EN = H)

RECEPTACLE PIN NUMBER	460 PIN MAPPING TO TYPE C CONNECTOR	460 PIN MAPPING TO DP SOURCE (GPU)	
		POL = L	POL = H
A11/10	CRX2	LnA(ML1)	LnD(ML2)
A2/3	CTX1	LnC(ML3)	LnB(ML0)
B11/10	CRX1	LnD(ML2)	LnA(ML1)
B2/3	CTX2	LnB(ML0)	LnC(ML3)
A8	CSBU1	SBU1(AUXN)	SBU2(AUXP)
B8	CSBU2	SBU2(AUXP)	SBU1(AUXN)

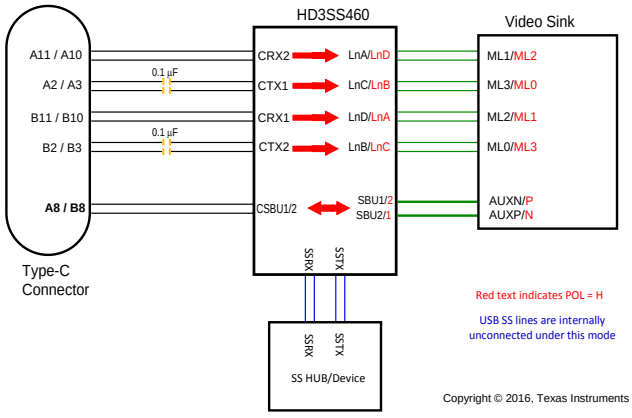

Figure 11. SINK Pin Assignment Option C (AMSEL = H, EN = H)

Copyright © 2015–2017, Texas Instruments Incorporated

Table 5. SINK Pin Assignment Option D (AMSEL = L, EN = H)

RECEPTACLE PIN NUMBER	460 PIN MAPPING TO TYPE C CONNECTOR	460 PIN MAPPING TO DP SOURCE (GPU)	
		POL = L	POL = H
A11/10	CRX2	LnA(ML1)	SSRX
A2/3	CTX1	SSTX	LnB(ML0)
B11/10	CRX1	SSRX	LnA(ML1)
B2/3	CTX2	LnB(ML0)	SSTX
A8	CSBU1	SBU1(AUXN)	SBU2(AUXP)
B8	CSBU2	SBU2(AUXP)	SBU1(AUXN)

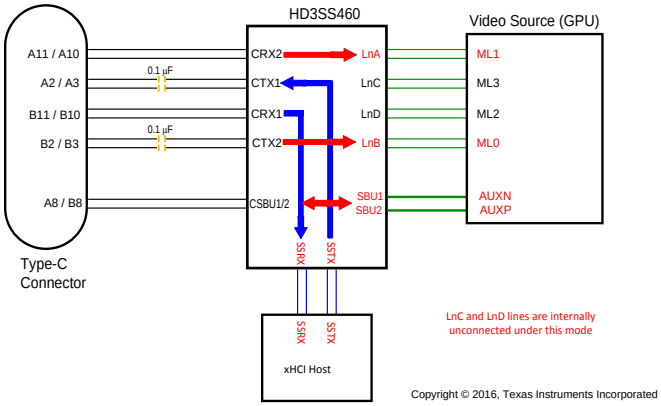

Figure 12. SINK Pin Assignment Option D (AMSEL = L, EN = H, POL=L)

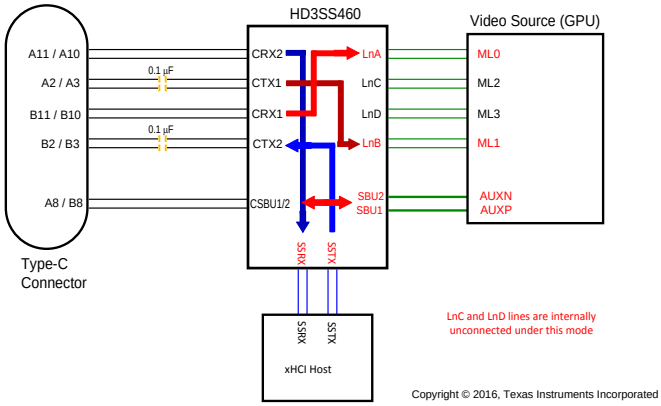

Figure 13. SINK Pin Assignment Option D (AMSEL = L, EN = H, POL=H)

Schematic diagrams Figure 14, Figure 15, and Figure 16 show the DP Source/USB Host implementation; and, Figure 17, Figure 18, and Figure 19 show the DP Sink/USB Device/HUSB Hub/Dock implementation, respectively.

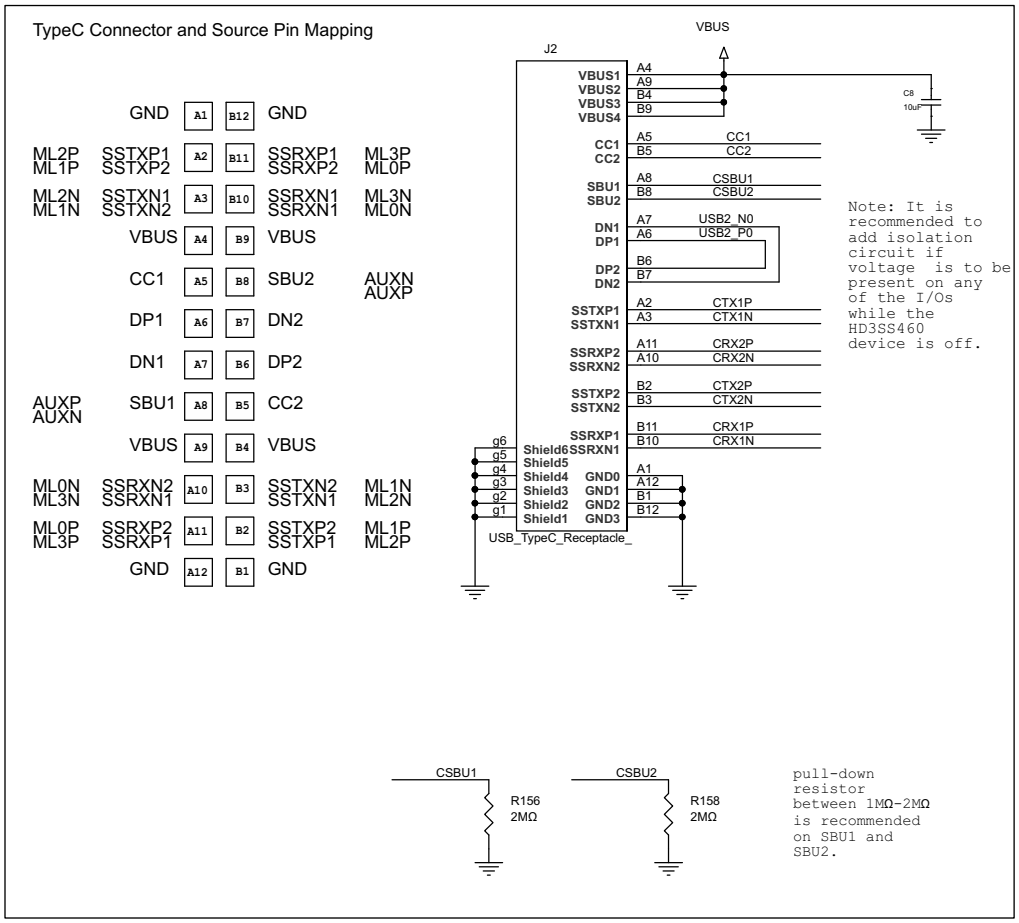

Copyright © 2016, Texas Instruments Incorporated

Figure 14. Schematic Implementations for DP Source/ USB Host (1 of 3)

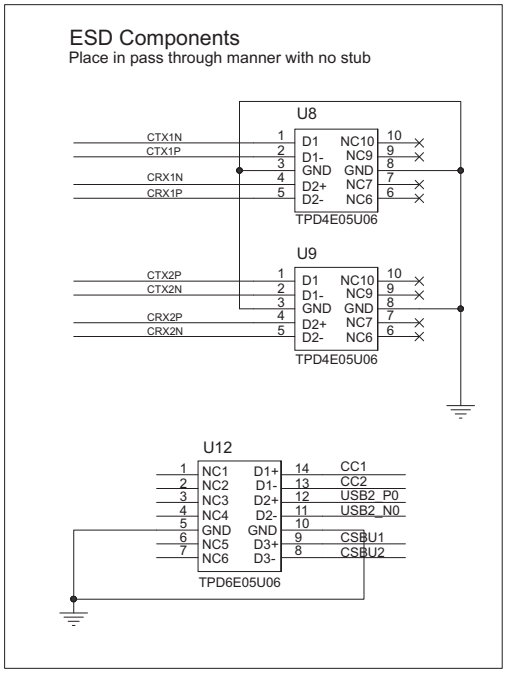

Copyright © 2016, Texas Instruments Incorporated

Figure 15. Schematic Implementations for DP Source/ USB Host (2 of 3)

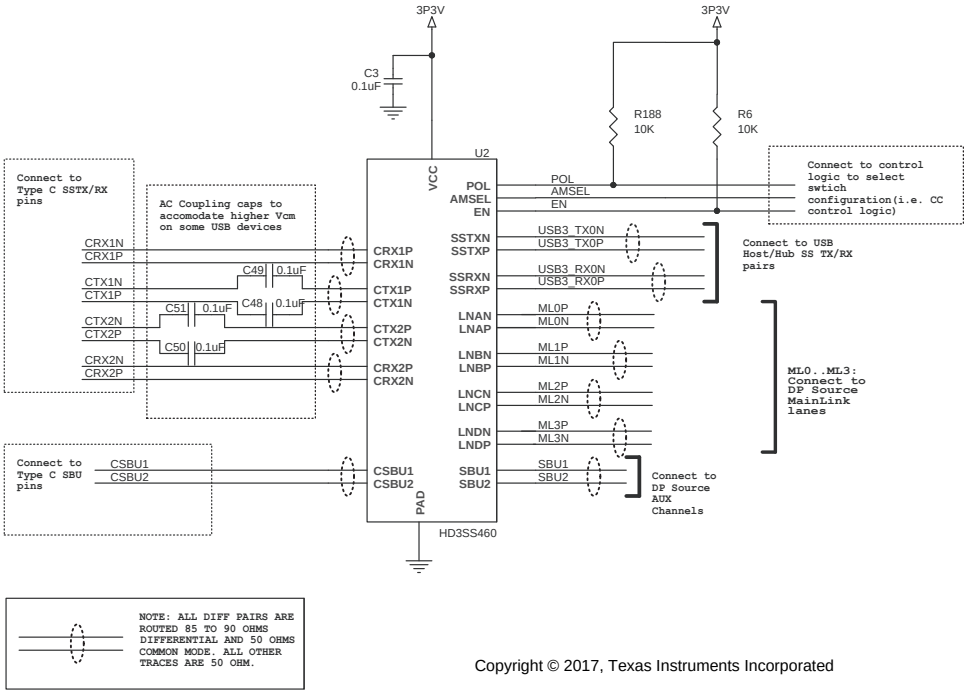

Copyright © 2017, Texas Instruments Incorporated

Figure 16. Schematic Implementations for DP Source/ USB Host (3 of 3)

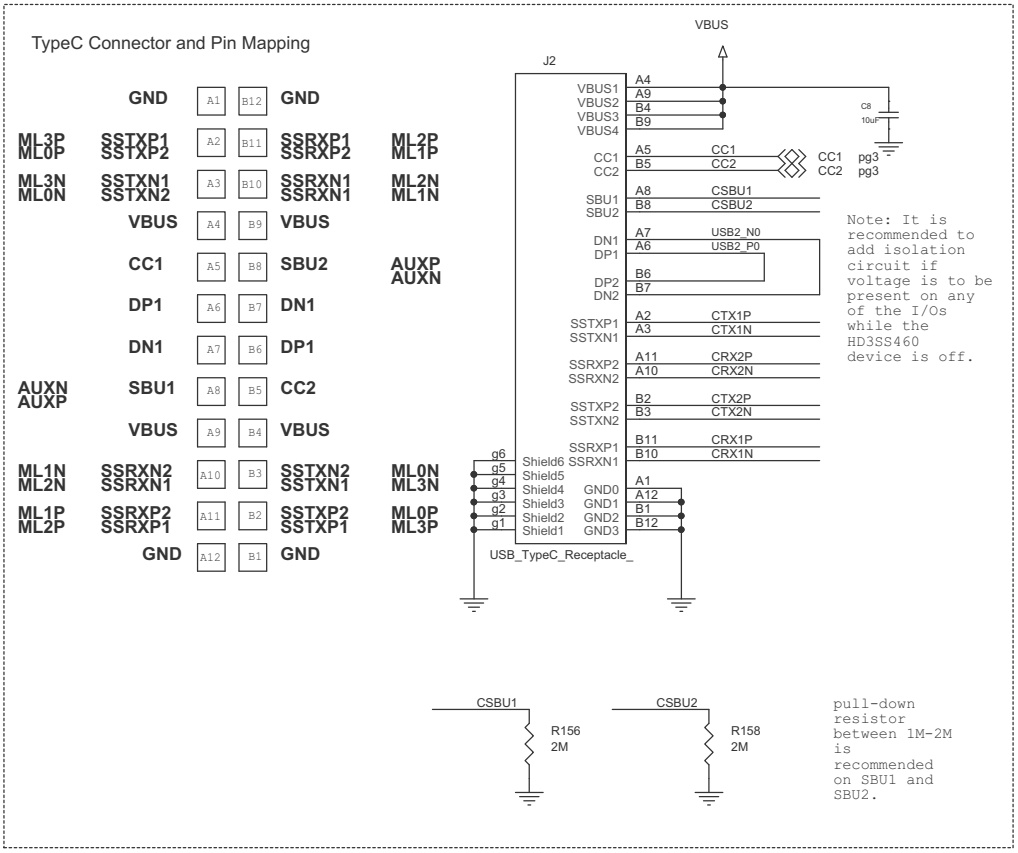

Copyright © 2016, Texas Instruments Incorporated

Figure 17. Schematic Implementations for DP Sink/ USB Device/HUB/Dock (1 of 3)

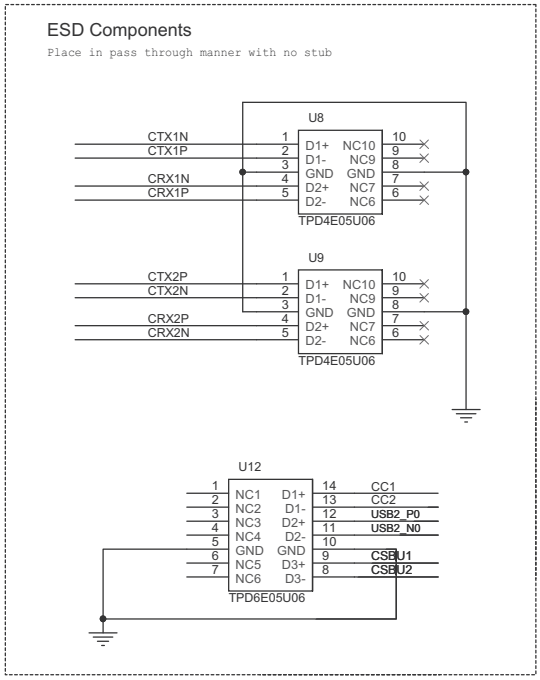

Copyright © 2016, Texas Instruments Incorporated

Figure 18. Schematic Implementations for DP Sink/ USB Device/HUB/Dock (2 of 3)

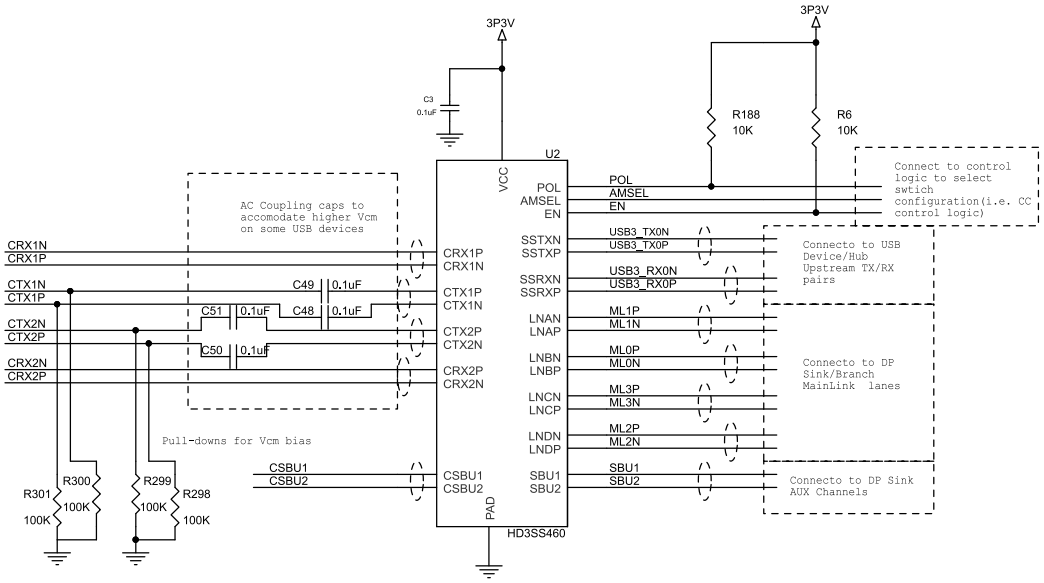

Copyright © 2017, Texas Instruments Incorporated

Figure 19. Schematic Implementations for DP Sink/ USB Device/HUB/Dock (3 of 3)

10 Power Supply Recommendations

There is no power supply sequence required for HD3SS460. However it is recommended that EN is asserted low after device supply VCC is stable and within specification. It is also recommended that ample decoupling capacitors are placed at the device V_{CC} near the pin.

11 Layout

11.1 Layout Guidelines

High performance layout practices are paramount for board layout for high speed signals to ensure good signal integrity. Even minor imperfection can cause impedance mismatch resulting reflection. Special care is warranted for traces, connections to device, and connectors.

11.1.1 Critical Routing

The high speed differential signals must be routed with great care to minimize signal quality degradation between the connector and the source or sink of the high speed signals by following the guidelines provided in this document. Depending on the configuration schemes, the speed of each differential pair can reach a maximum speed of 5.4 Gbps. These signals are to be routed first before other signals with highest priority.

- Each differential pair should be routed together with controlled differential impedance of 85 to 90-Ω and 50-Ω common mode impedance. Keep away from other high speed signals. The number of vias should be kept to minimum. Each pair should be separated from adjacent pairs by at least 3 times the signal trace width. Route all differential pairs on the same group of layers (Outer layers or inner layers) if not on the same layer. No 90 degree turns on any of the differential pairs. If bends are used on high speed differential pairs, the angle of the bend should be greater than 135 degrees.
- Length matching:
  - Keep high speed differential pairs lengths within 5 mil of each other to keep the intra-pair skew minimum.
  - The inter-pair matching of the differential pairs is not as critical as intra-pair matching. The SSTX and SSRX pairs do not have to match while they need to be routed as short as possible.
- Keep high speed differential pair traces adjacent to ground plane.
- Do not route differential pairs over any plane split
- ESD components on the high speed differential lanes should be placed nearest to the connector in a pass through manner without stubs on the differential path. In order to control impedance for transmission lines, a solid ground plane should be placed next to the high- speed signal layer. This also provides an excellent low-inductance path for the return current flow.
  - Placement recommendation would be: Connector – ESD Components --- HD3SS460
- For ease of routing, the P and N connection of the USB3.1 differential pairs to the HD3SS460 pins can be swapped as long as the corresponding pairs are swapped on the other end of the switch The example is shown in the reference EVM schematics section of this document. The P/N can be swapped on USB 3.1 connection of the switch for ease of routing purposes.

11.1.2 General Routing/Placement Rules

- Route all high-speed signals first on un-routed PCB: SSTXP/N, SSRXT/N, LNAP/N, LNB P/N, LNC P/N, LND P/N, CTX*P/N. The stub on USB2 D+ and D- pairs should not exceed 3.5mm.
- Follow 20H rule (H is the distance to reference plane) for separation of the high-speed trace from the edge of the plane
- Minimize parallelism of high speed clocks and other periodic signal traces to high speed lines
- All differential pairs should be routed on the top or bottom layer (microstrip traces) if possible or on the same group of layers. Vias should only be used in the breakout region of the device to route from the top to bottom layer when necessary. Avoid using vias in the main region of the board at all cost. Use a ground reference via next to signal via. Distance between ground reference via and signal need to be calculated to have similar impedance as traces.
- All differential signals should not be routed over plane split. Changing signal layers is preferable to crossing plane splits.
- Use of and proper placement of stitching caps when split plane crossing is unavoidable to account for high-frequency return current path
- Route differential traces over a continuous plane with no interruptions.
- Do not route differential traces under power connectors or other interface connectors, crystals, oscillators, or any magnetic source.
- Route traces away from etching areas like pads, vias, and other signal traces. Try to maintain a 20 mil keep-out distance where possible.

Copyright © 2015–2017, Texas Instruments Incorporated

Layout Guidelines (continued)

- Decoupling capacitors should be placed next to each power terminal on the HD3SS460. Care should be taken to minimize the stub length of the trace connecting the capacitor to the power pin.
- Avoid sharing vias between multiple decoupling capacitors.
- Place vias as close as possible to the decoupling capacitor solder pad.
- Widen VCC/GND planes to reduce effect of static and dynamic IR drop.
- The VBUS traces/planes must be wide enough to carry maximum of 2 A current.

11.2 Layout Example

Figure 20, Figure 21, and Figure 22 illustrate some guidelines for layout. Actual layout should be optimized for various factors such as board geometry, connector type, and application.

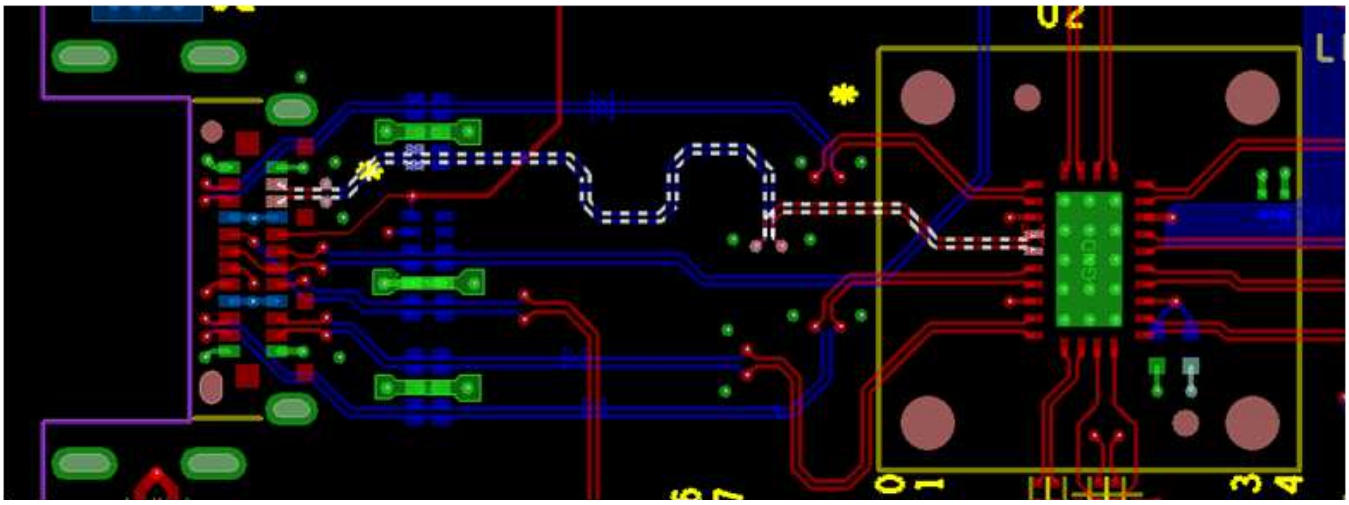

Figure 20. USB Type C Connector to HD3SS460 Signal Routing

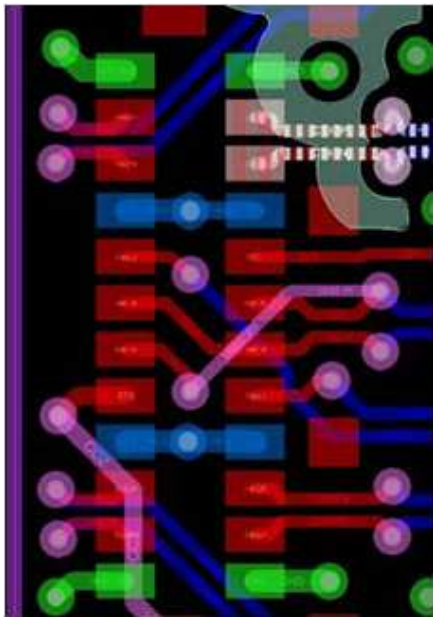

Figure 21. Dual SMT Mid-Mount Type C Connector Layout Example Zoom-in

Copyright © 2015–2017, Texas Instruments Incorporated

Layout Example (continued)

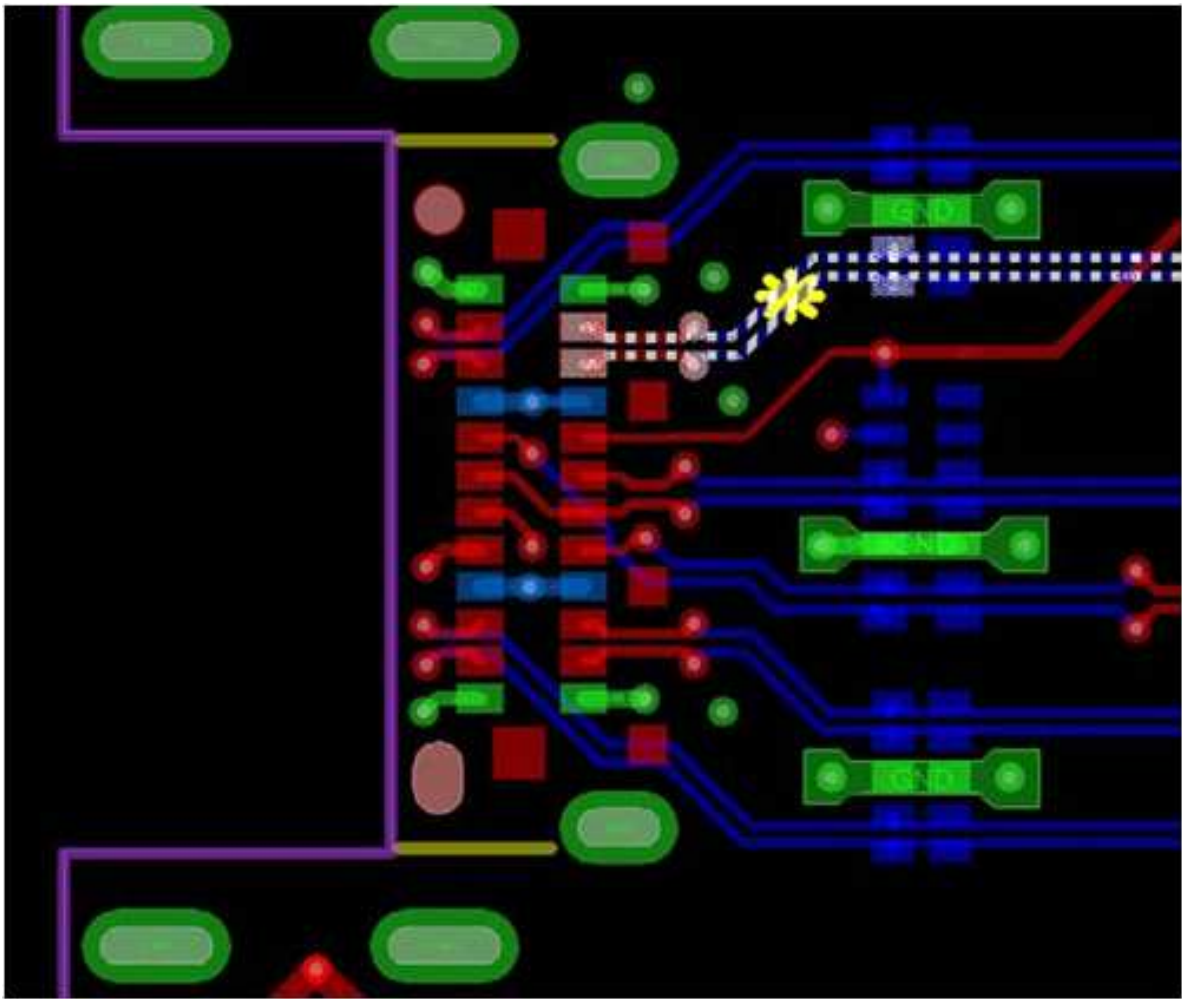

Figure 22. Dual-row SMT Mid-mount Type C with ESD Components

Copyright © 2015–2017, Texas Instruments Incorporated

12 Device and Documentation Support

12.1 Receiving Notification of Documentation Updates

To receive notification of documentation updates — go to the product folder for your device on ti.com. In the upper right-hand corner, click the *Alert me* button to register and receive a weekly digest of product information that has changed (if any). For change details, check the revision history of any revised document.

12.2 Community Resources

The following links connect to TI community resources. Linked contents are provided "AS IS" by the respective contributors. They do not constitute TI specifications and do not necessarily reflect TI's views; see TI's Terms of Use.

TI E2E™ Online Community ***TI's Engineer-to-Engineer (E2E) Community.*** Created to foster collaboration among engineers. At e2e.ti.com, you can ask questions, share knowledge, explore ideas and help solve problems with fellow engineers.

Design Support ***TI's Design Support*** Quickly find helpful E2E forums along with design support tools and contact information for technical support.

12.3 Trademarks

E2E is a trademark of Texas Instruments.
USB Type-C is a trademark of USB-IF, Inc..
All other trademarks are the property of their respective owners.

12.4 Electrostatic Discharge Caution



These devices have limited built-in ESD protection. The leads should be shorted together or the device placed in conductive foam during storage or handling to prevent electrostatic damage to the MOS gates.

12.5 Glossary

SLYZ022 — *TI Glossary*.

This glossary lists and explains terms, acronyms, and definitions.

13 Mechanical, Packaging, and Orderable Information

The following pages include mechanical, packaging, and orderable information. This information is the most current data available for the designated devices. This data is subject to change without notice and revision of this document. For browser-based versions of this data sheet, refer to the left-hand navigation.

Copyright © 2015–2017, Texas Instruments Incorporated

PACKAGING INFORMATION

Orderable part number	Status (1)	Material type (2)	Package | Pins	Package qty | Carrier	RoHS (3)	Lead finish/ Ball material (4)	MSL rating/ Peak reflow (5)	Op temp (°C)	Part marking (6)
HD3SS460IRHRR	Active	Production	WQFN (RHR) | 28	3000 | LARGE T&R	Yes	NIPDAU	Level-1-260C-UNLIM	-40 to 85	3SS460I
HD3SS460IRHRR.B	Active	Production	WQFN (RHR) | 28	3000 | LARGE T&R	Yes	NIPDAU	Level-1-260C-UNLIM	-40 to 85	3SS460I
HD3SS460IRHRT	Active	Production	WQFN (RHR) | 28	250 | SMALL T&R	Yes	NIPDAU	Level-1-260C-UNLIM	-40 to 85	3SS460I
HD3SS460IRHRT.B	Active	Production	WQFN (RHR) | 28	250 | SMALL T&R	Yes	NIPDAU	Level-1-260C-UNLIM	-40 to 85	3SS460I
HD3SS460IRNHR	Active	Production	WQFN (RNH) | 30	3000 | LARGE T&R	Yes	NIPDAU	Level-1-260C-UNLIM	-40 to 85	460IRNH
HD3SS460IRNHR.B	Active	Production	WQFN (RNH) | 30	3000 | LARGE T&R	Yes	NIPDAU	Level-1-260C-UNLIM	-40 to 85	460IRNH
HD3SS460IRNHT	Active	Production	WQFN (RNH) | 30	250 | SMALL T&R	Yes	NIPDAU	Level-1-260C-UNLIM	-40 to 85	460IRNH
HD3SS460IRNHT.B	Active	Production	WQFN (RNH) | 30	250 | SMALL T&R	Yes	NIPDAU	Level-1-260C-UNLIM	-40 to 85	460IRNH
HD3SS460RHRR	Active	Production	WQFN (RHR) | 28	3000 | LARGE T&R	Yes	NIPDAU	Level-1-260C-UNLIM	0 to 70	3SS460
HD3SS460RHRR.B	Active	Production	WQFN (RHR) | 28	3000 | LARGE T&R	Yes	NIPDAU	Level-1-260C-UNLIM	0 to 70	3SS460
HD3SS460RHRT	Active	Production	WQFN (RHR) | 28	250 | SMALL T&R	Yes	NIPDAU	Level-1-260C-UNLIM	0 to 70	3SS460
HD3SS460RHRT.B	Active	Production	WQFN (RHR) | 28	250 | SMALL T&R	Yes	NIPDAU	Level-1-260C-UNLIM	0 to 70	3SS460
HD3SS460RNHR	Active	Production	WQFN (RNH) | 30	3000 | LARGE T&R	Yes	NIPDAU	Level-1-260C-UNLIM	0 to 70	460RNH
HD3SS460RNHR.B	Active	Production	WQFN (RNH) | 30	3000 | LARGE T&R	Yes	NIPDAU	Level-1-260C-UNLIM	0 to 70	460RNH
HD3SS460RNHT	Active	Production	WQFN (RNH) | 30	250 | SMALL T&R	Yes	NIPDAU	Level-1-260C-UNLIM	0 to 70	460RNH
HD3SS460RNHT.B	Active	Production	WQFN (RNH) | 30	250 | SMALL T&R	Yes	NIPDAU	Level-1-260C-UNLIM	0 to 70	460RNH

(1) **Status:** For more details on status, see our product life cycle.

(2) **Material type:** When designated, preproduction parts are prototypes/experimental devices, and are not yet approved or released for full production. Testing and final process, including without limitation quality assurance, reliability performance testing, and/or process qualification, may not yet be complete, and this item is subject to further changes or possible discontinuation. If available for ordering, purchases will be subject to an additional waiver at checkout, and are intended for early internal evaluation purposes only. These items are sold without warranties of any kind.

(3) **RoHS values:** Yes, No, RoHS Exempt. See the TI RoHS Statement for additional information and value definition.

(4) **Lead finish/Ball material:** Parts may have multiple material finish options. Finish options are separated by a vertical ruled line. Lead finish/Ball material values may wrap to two lines if the finish value exceeds the maximum column width.

(5) **MSL rating/Peak reflow:** The moisture sensitivity level ratings and peak solder (reflow) temperatures. In the event that a part has multiple moisture sensitivity ratings, only the lowest level per JEDEC standards is shown. Refer to the shipping label for the actual reflow temperature that will be used to mount the part to the printed circuit board.

(6) **Part marking:** There may be an additional marking, which relates to the logo, the lot trace code information, or the environmental category of the part.

Multiple part markings will be inside parentheses. Only one part marking contained in parentheses and separated by a "~" will appear on a part. If a line is indented then it is a continuation of the previous line and the two combined represent the entire part marking for that device.

Important Information and Disclaimer: The information provided on this page represents TI's knowledge and belief as of the date that it is provided. TI bases its knowledge and belief on information provided by third parties, and makes no representation or warranty as to the accuracy of such information. Efforts are underway to better integrate information from third parties. TI has taken and continues to take reasonable steps to provide representative and accurate information but may not have conducted destructive testing or chemical analysis on incoming materials and chemicals. TI and TI suppliers consider certain information to be proprietary, and thus CAS numbers and other limited information may not be available for release.

In no event shall TI's liability arising out of such information exceed the total purchase price of the TI part(s) at issue in this document sold by TI to Customer on an annual basis.

TAPE AND REEL INFORMATION

REEL DIMENSIONS

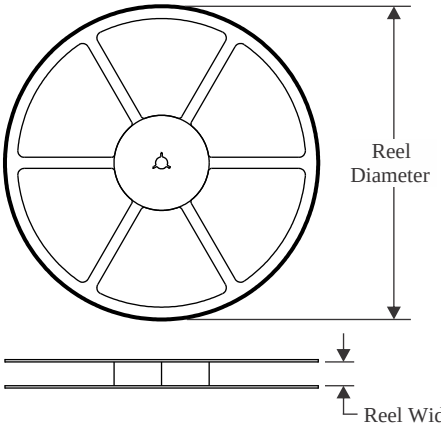

TAPE DIMENSIONS

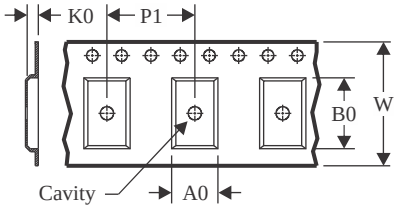

A0	Dimension designed to accommodate the component width
B0	Dimension designed to accommodate the component length
K0	Dimension designed to accommodate the component thickness
W	Overall width of the carrier tape
P1	Pitch between successive cavity centers

QUADRANT ASSIGNMENTS FOR PIN 1 ORIENTATION IN TAPE

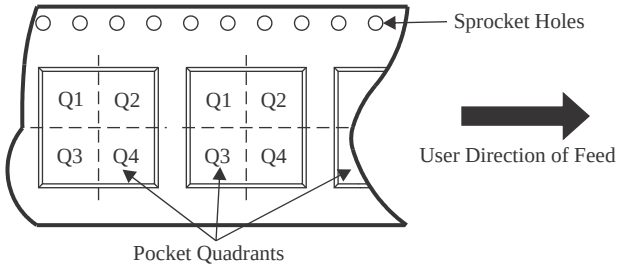

*All dimensions are nominal

Device	Package Type	Package Drawing	Pins	SPQ	Reel Diameter (mm)	Reel Width W1 (mm)	A0 (mm)	B0 (mm)	K0 (mm)	P1 (mm)	W (mm)	Pin1 Quadrant
HD3SS460IRHRR	WQFN	RHR	28	3000	330.0	12.4	3.8	5.8	1.2	8.0	12.0	Q1
HD3SS460IRHRT	WQFN	RHR	28	250	180.0	12.4	3.8	5.8	1.2	8.0	12.0	Q1
HD3SS460IRNHR	WQFN	RNH	30	3000	330.0	12.4	2.8	4.8	1.2	4.0	12.0	Q1
HD3SS460IRNHT	WQFN	RNH	30	250	180.0	12.4	2.8	4.8	1.2	4.0	12.0	Q1
HD3SS460RHRR	WQFN	RHR	28	3000	330.0	12.4	3.8	5.8	1.2	8.0	12.0	Q1
HD3SS460RHRT	WQFN	RHR	28	250	180.0	12.4	3.8	5.8	1.2	8.0	12.0	Q1
HD3SS460RNHR	WQFN	RNH	30	3000	330.0	12.4	2.8	4.8	1.2	4.0	12.0	Q1
HD3SS460RNHT	WQFN	RNH	30	250	180.0	12.4	2.8	4.8	1.2	4.0	12.0	Q1

TAPE AND REEL BOX DIMENSIONS

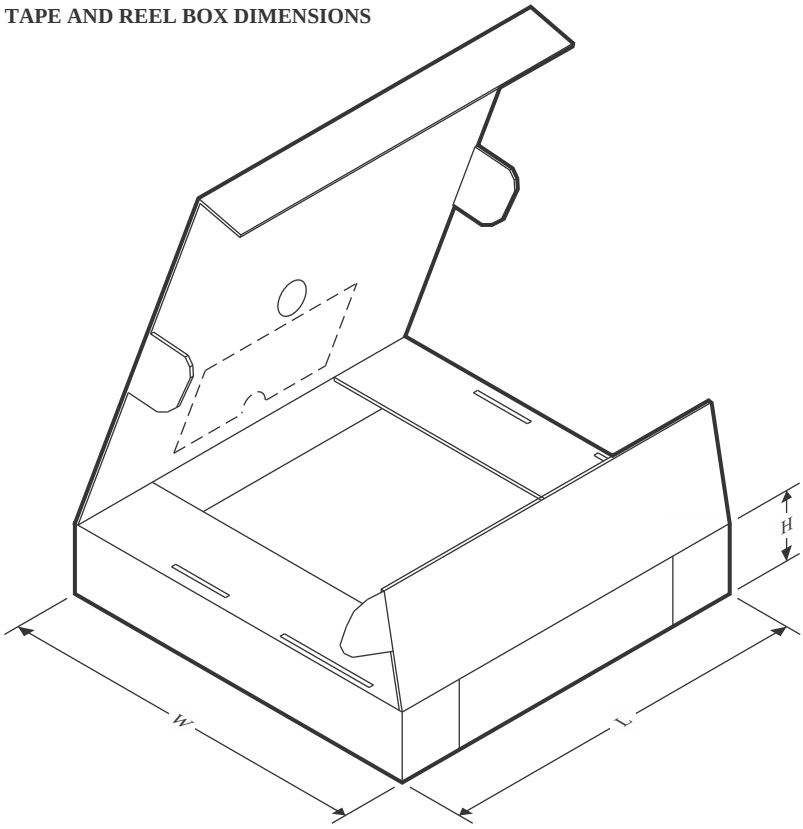

*All dimensions are nominal

Device	Package Type	Package Drawing	Pins	SPQ	Length (mm)	Width (mm)	Height (mm)
HD3SS460IRHRR	WQFN	RHR	28	3000	346.0	346.0	33.0
HD3SS460IRHRT	WQFN	RHR	28	250	182.0	182.0	20.0
HD3SS460IRNHR	WQFN	RNH	30	3000	367.0	367.0	35.0
HD3SS460IRNHT	WQFN	RNH	30	250	210.0	185.0	35.0
HD3SS460RHRR	WQFN	RHR	28	3000	346.0	346.0	33.0
HD3SS460RHRT	WQFN	RHR	28	250	182.0	182.0	20.0
HD3SS460RNHR	WQFN	RNH	30	3000	367.0	367.0	35.0
HD3SS460RNHT	WQFN	RNH	30	250	210.0	185.0	35.0

GENERIC PACKAGE VIEW

RHR 28

WQFN - 0.8 mm max height

3.5 x 5.5, 0.5 mm pitch

PLASTIC QUAD FLATPACK - NO LEAD

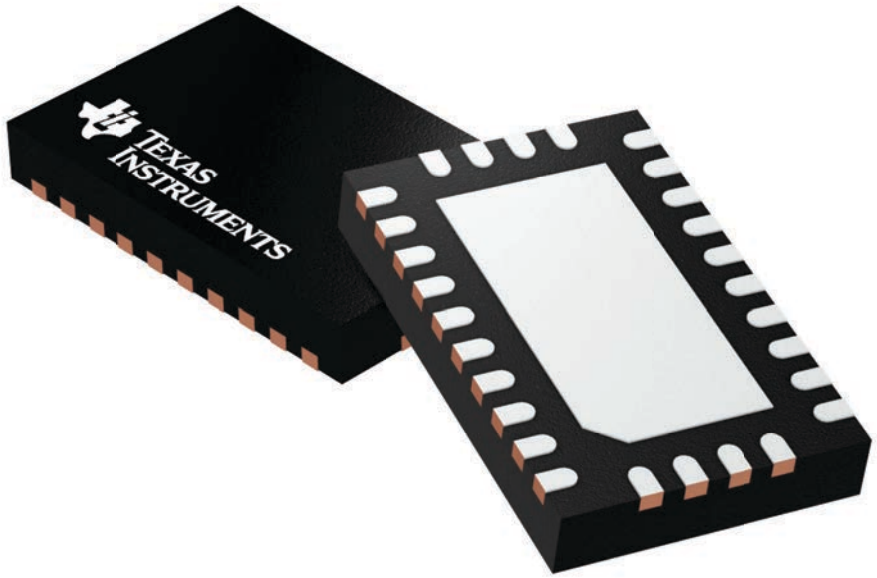

Images above are just a representation of the package family, actual package may vary.
Refer to the product data sheet for package details.

4210249/B

PACKAGE OUTLINE

RHR0028A

WQFN - 0.8 mm max height

PLASTIC QUAD FLATPACK - NO LEAD

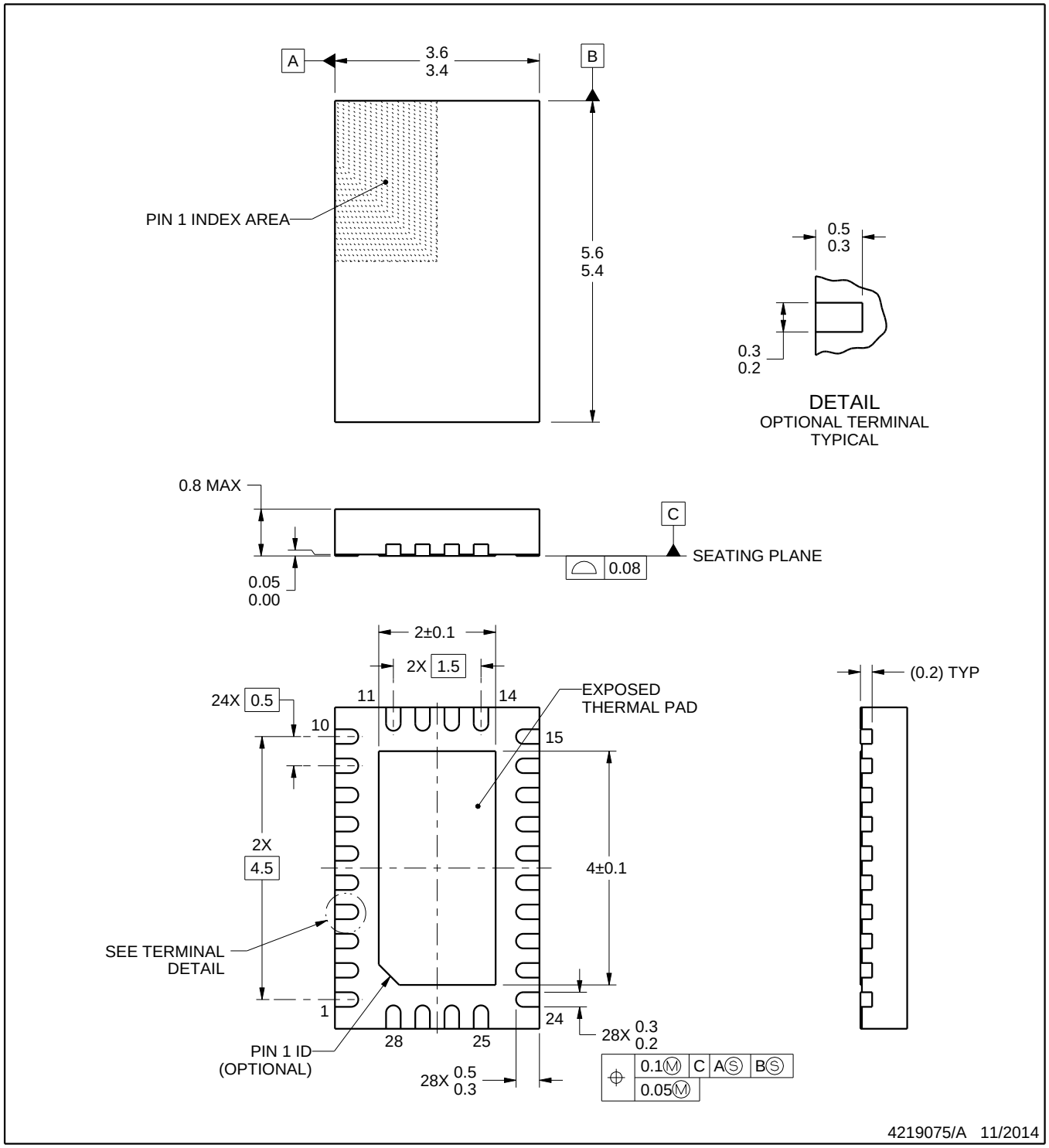

NOTES:

1. All linear dimensions are in millimeters. Any dimensions in parenthesis are for reference only. Dimensioning and tolerancing per ASME Y14.5M.
2. This drawing is subject to change without notice.
3. The package thermal pad must be soldered to the printed circuit board for thermal and mechanical performance.

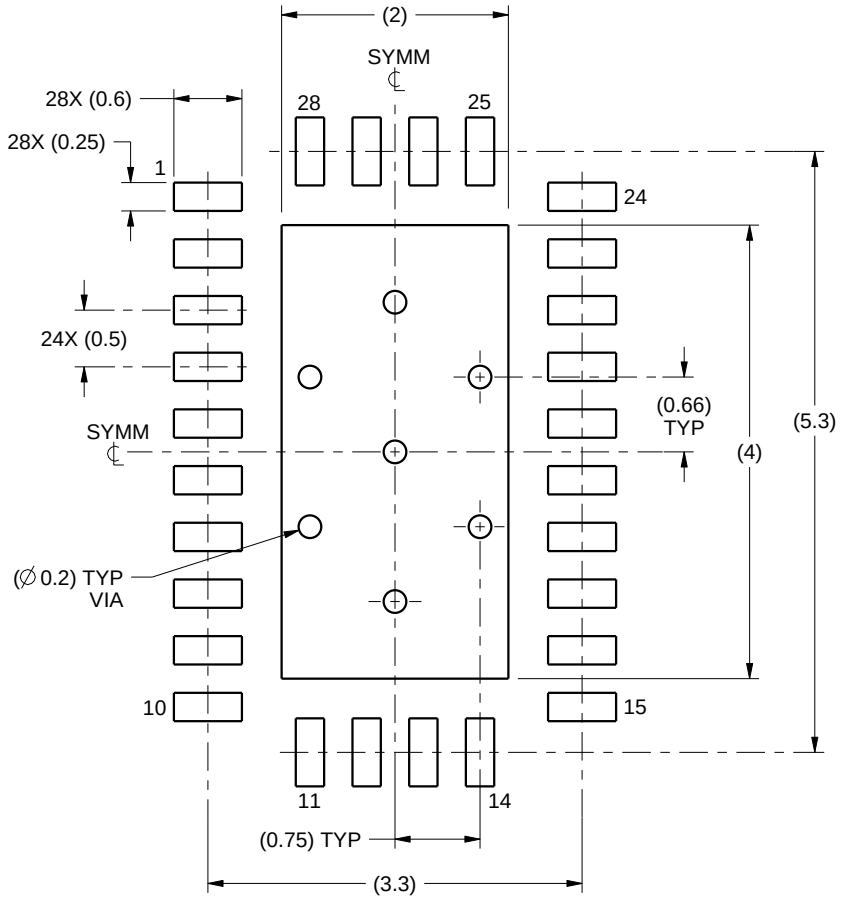

LAND PATTERN EXAMPLE
SCALE:15X

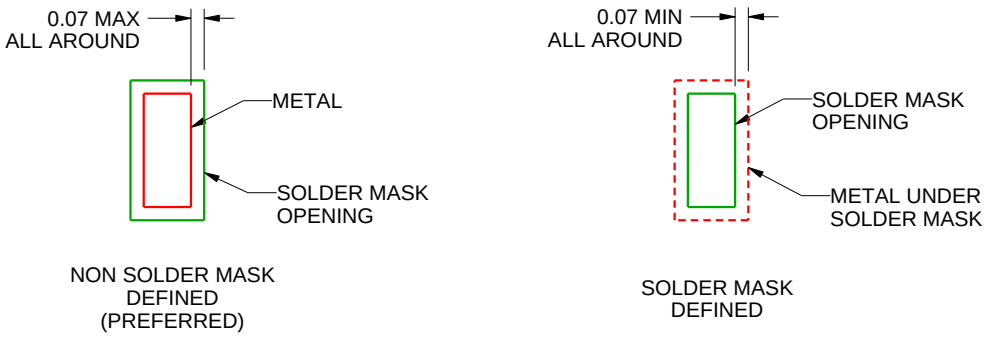

SOLDER MASK DETAILS

4219075/A 11/2014

NOTES: (continued)

4. This package is designed to be soldered to a thermal pad on the board. For more information, see Texas Instruments literature number SLUA271 (www.ti.com/lit/slua271).

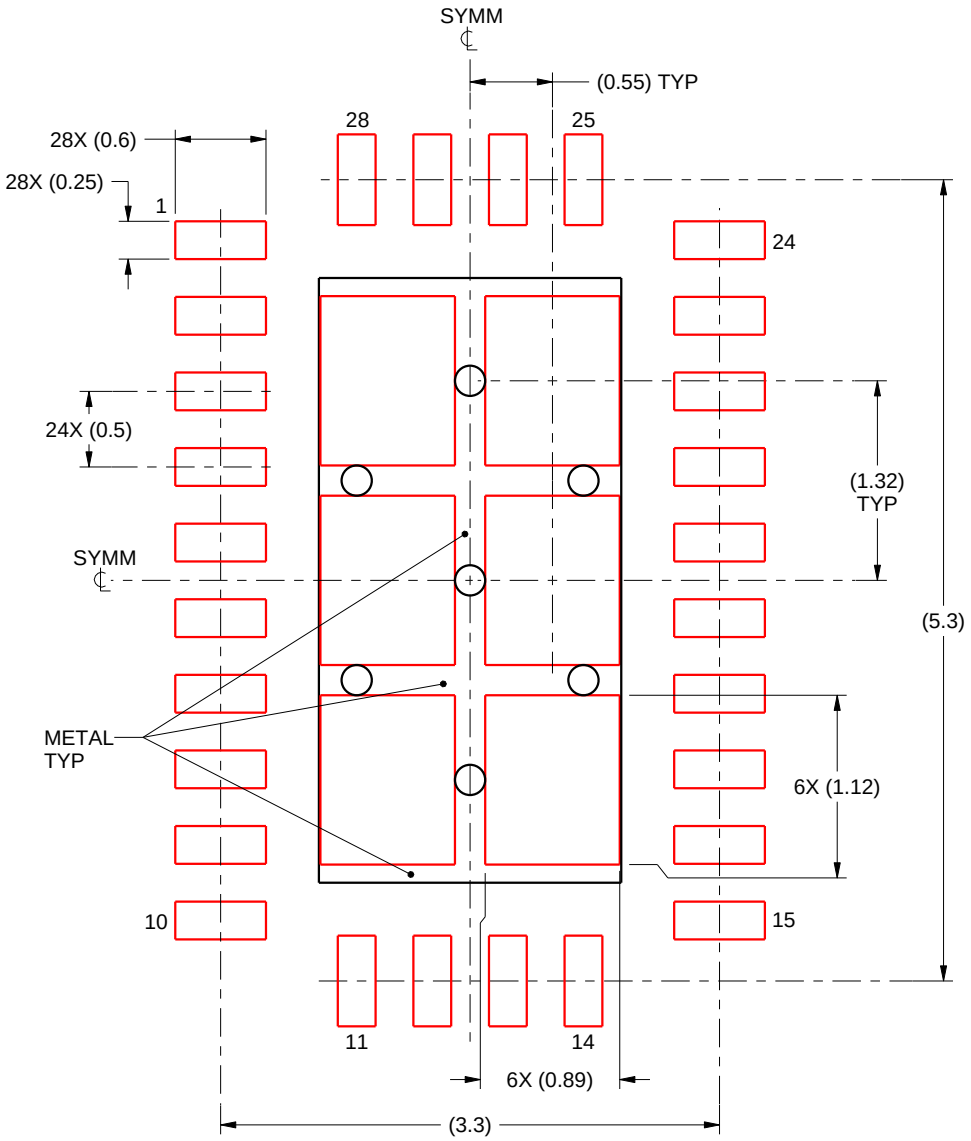

SOLDER PASTE EXAMPLE
BASED ON 0.125 mm THICK STENCIL

EXPOSED PAD
75% PRINTED SOLDER COVERAGE BY AREA
SCALE:20X

4219075/A 11/2014

NOTES: (continued)

5. Laser cutting apertures with trapezoidal walls and rounded corners may offer better paste release. IPC-7525 may have alternate design recommendations.

PACKAGE OUTLINE

RNH0030A

WQFN - 0.8 mm max height

PLASTIC QUAD FLATPACK - NO LEAD

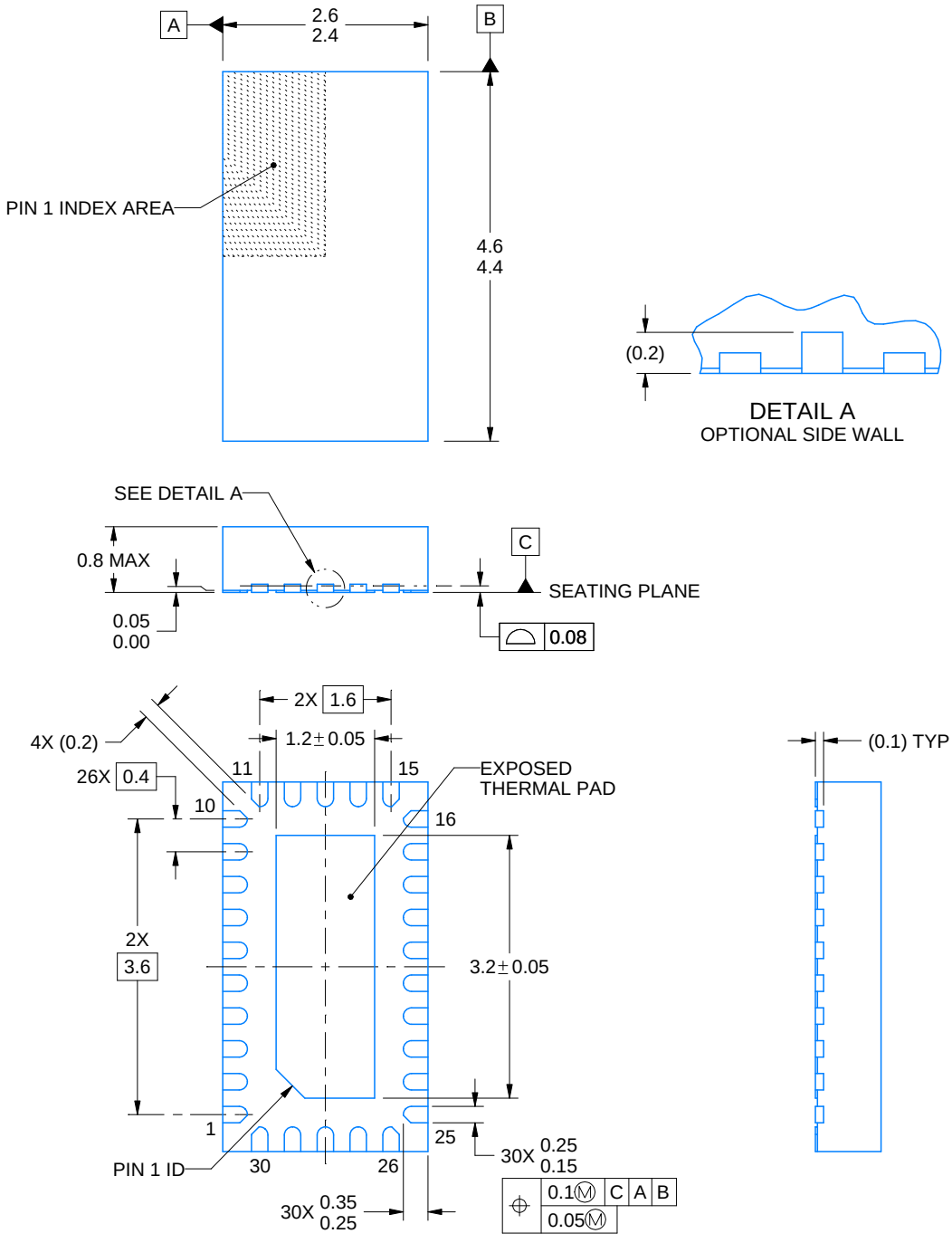

NOTES:

1. All linear dimensions are in millimeters. Any dimensions in parenthesis are for reference only. Dimensioning and tolerancing per ASME Y14.5M.
2. This drawing is subject to change without notice.
3. The package thermal pad must be soldered to the printed circuit board for thermal and mechanical performance.

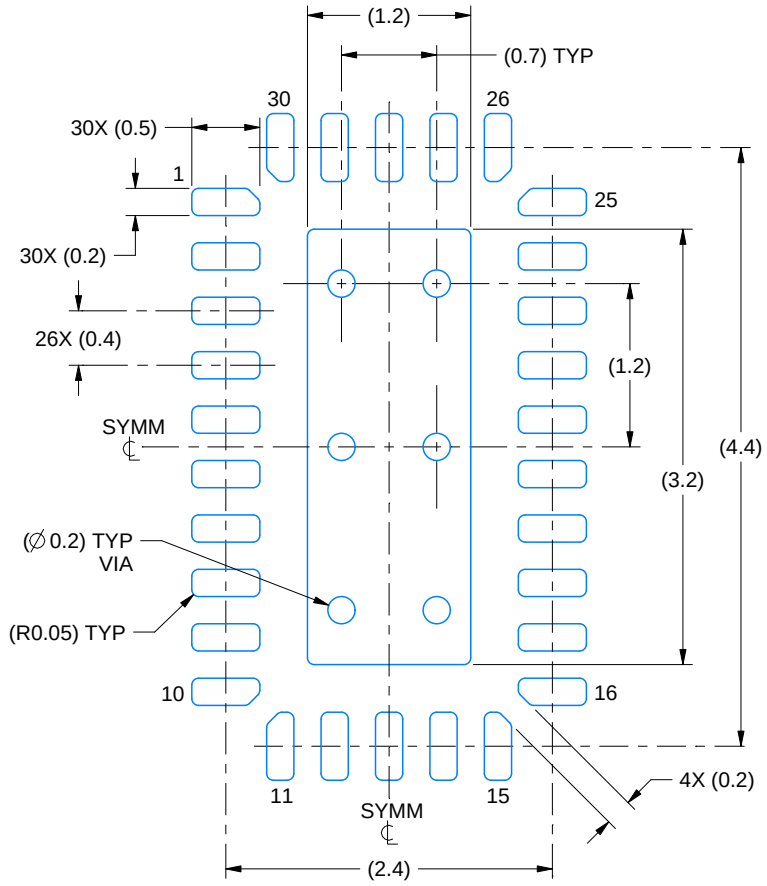

LAND PATTERN EXAMPLE
EXPOSED METAL SHOWN
SCALE:18X

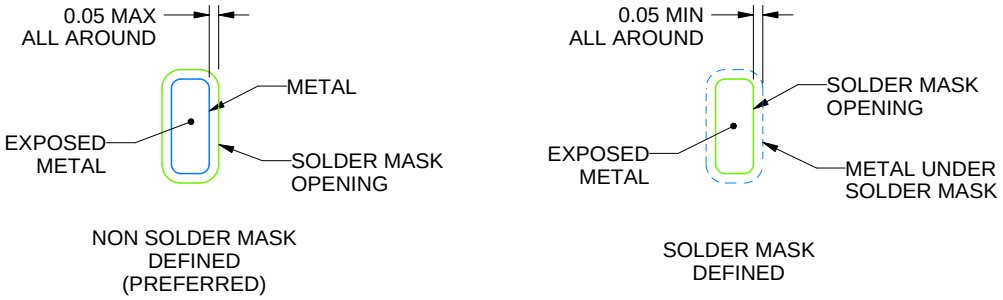

SOLDER MASK DETAILS

4221819/B 10/2017

NOTES: (continued)

4. This package is designed to be soldered to a thermal pad on the board. For more information, see Texas Instruments literature number SLUA271 (www.ti.com/lit/slua271).

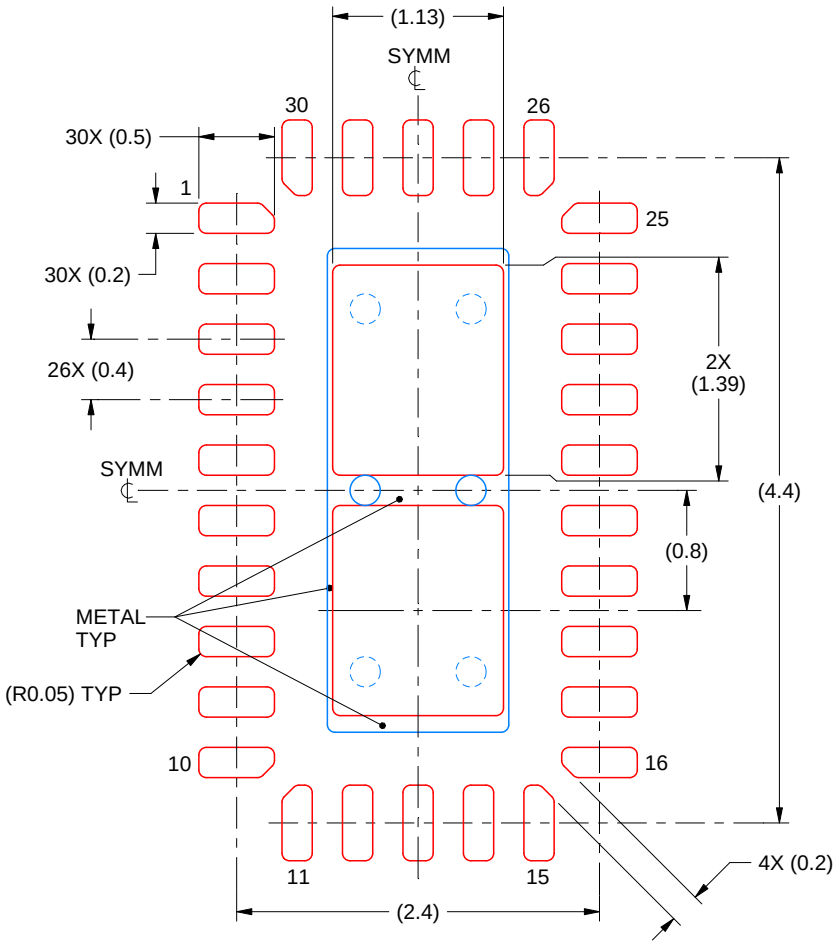

SOLDER PASTE EXAMPLE
BASED ON 0.1 mm THICK STENCIL

EXPOSED PAD
82% PRINTED SOLDER COVERAGE BY AREA
SCALE:20X

4221819/B 10/2017

NOTES: (continued)

5. Laser cutting apertures with trapezoidal walls and rounded corners may offer better paste release. IPC-7525 may have alternate design recommendations.

IMPORTANT NOTICE AND DISCLAIMER

TI PROVIDES TECHNICAL AND RELIABILITY DATA (INCLUDING DATASHEETS), DESIGN RESOURCES (INCLUDING REFERENCE DESIGNS), APPLICATION OR OTHER DESIGN ADVICE, WEB TOOLS, SAFETY INFORMATION, AND OTHER RESOURCES “AS IS” AND WITH ALL FAULTS, AND DISCLAIMS ALL WARRANTIES, EXPRESS AND IMPLIED, INCLUDING WITHOUT LIMITATION ANY IMPLIED WARRANTIES OF MERCHANTABILITY, FITNESS FOR A PARTICULAR PURPOSE OR NON-INFRINGEMENT OF THIRD PARTY INTELLECTUAL PROPERTY RIGHTS.

These resources are intended for skilled developers designing with TI products. You are solely responsible for (1) selecting the appropriate TI products for your application, (2) designing, validating and testing your application, and (3) ensuring your application meets applicable standards, and any other safety, security, regulatory or other requirements.

These resources are subject to change without notice. TI grants you permission to use these resources only for development of an application that uses the TI products described in the resource. Other reproduction and display of these resources is prohibited. No license is granted to any other TI intellectual property right or to any third party intellectual property right. TI disclaims responsibility for, and you fully indemnify TI and its representatives against any claims, damages, costs, losses, and liabilities arising out of your use of these resources.

TI’s products are provided subject to TI’s Terms of Sale, TI’s General Quality Guidelines, or other applicable terms available either on ti.com or provided in conjunction with such TI products. TI’s provision of these resources does not expand or otherwise alter TI’s applicable warranties or warranty disclaimers for TI products. Unless TI explicitly designates a product as custom or customer-specified, TI products are standard, catalog, general purpose devices.

TI objects to and rejects any additional or different terms you may propose.

Copyright © 2025, Texas Instruments Incorporated

Last updated 10/2025