# ISO772x-Q1 High-Speed, Robust EMC, Reinforced Dual-Channel Digital Isolators

## 1 Features

- Qualified for automotive applications
- AEC-Q100 qualified With the following results:
  - Device temperature grade 1: –40°C to +125°C ambient operating temperature range
  - Device HBM ESD classification level 3A
  - Device CDM ESD classification level C6
- Functional Safety-Capable
  - Documentation available to aid functional safety system design: ISO7720-Q1, ISO7721-Q1
- 100 Mbps data rate
- Robust isolation barrier:
  - >30-Year projected lifetime at 1.5 $kV_{RMS}$ working voltage
  - Up to 5000 $V_{RMS}$ Isolation Rating
  - Up to 12.8 kV surge capability
  - ±100 kV/µs Typical CMTI
- Wide supply range: 2.25 V to 5.5 V
- 2.25-V to 5.5-V level translation
- Default output *High* (ISO772x) and *Low* (ISO772xF) Options
- Low power consumption, typical 1.7 mA per channel at 1 Mbps
- Low propagation delay: 11 ns typical
- Robust electromagnetic compatibility (EMC)
  - System-Level ESD, EFT, and surge immunity
  - ±8 kV IEC 61000-4-2 contact discharge protection across isolation barrier
  - Low emissions
- Wide-SOIC (DW-16, DWV-8) and Narrow-SOIC (D-8) package options
- Safety-related Certifications
  - VDE reinforced insulation per DIN EN IEC 60747-17 (VDE 0884-17)
  - UL 1577 component recognition program
  - IEC 62368-1, IEC 61010-1, IEC 60601-1 and GB 4943.1 certifications

## 2 Applications

- Hybrid, electric and power train system (EV/HEV)
  - Battery management system (BMS)
  - On-board charger
  - Traction inverter
  - DC/DC converter
  - Inverter and motor control

## 3 Description

The ISO772x-Q1 devices are high-performance, dual-channel digital isolators with 5000 $V_{RMS}$ (DW and DWV packages) and 3000 $V_{RMS}$ (D package) isolation ratings per UL 1577. This family includes devices with reinforced insulation ratings according to VDE, CSA, TUV and CQC.

The ISO772x-Q1 devices provide high electromagnetic immunity and low emissions at low power consumption, while isolating CMOS or LVCMOS digital I/Os. Each isolation channel has a logic input and output buffer separated by a double capacitive silicon dioxide ($SiO_2$) insulation barrier. The ISO7720-Q1 device has both channels in the same direction while the ISO7721-Q1 device has both channels in the opposite direction. In the event of input power or signal loss, the default output is *high* for devices without suffix F and *low* for devices with suffix F. See the *Device Functional Modes* section for further details.

Used in conjunction with isolated power supplies, these devices help prevent noise currents on data buses, such as CAN and LIN, from damaging sensitive circuitry. Through innovative chip design and layout techniques, the electromagnetic compatibility of the ISO772x-Q1 devices has been significantly enhanced to ease system-level ESD, EFT, surge, and emissions compliance. The ISO772x-Q1 family of devices is available in 16-pin SOIC wide-body (DW), 8-pin SOIC wide-body (DWV), and 8-pin SOIC narrow-body (D) packages.

**Device Information**

| PART NUMBER (1) | PACKAGE | BODY SIZE (NOM) |
|---|---|---|
| ISO7720-Q1<br>ISO7721-Q1 | D (8) | 4.90 mm × 3.91 mm |
| | DW (16) | 10.30 mm × 7.50 mm |
| | DWV (8) | 5.85 mm × 7.50 mm |

(1) For all available packages, see the orderable addendum at the end of the datasheet.

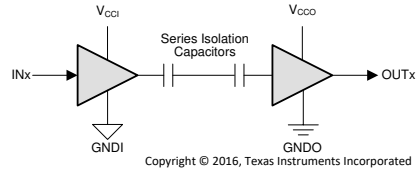


$V_{CCI}$=Input supply, $V_{CCO}$=Output supply

An IMPORTANT NOTICE at the end of this data sheet addresses availability, warranty, changes, use in safety-critical applications, intellectual property matters and other important disclaimers. PRODUCTION DATA.

GNDI=Input ground, GNDO=Output ground

### Simplified Schematic


Copyright © 2025 Texas Instruments Incorporated

## Table of Contents

**1 Features**....1
**2 Applications**....1
**3 Description**....1
**4 Revision History**....3
**5 Pin Configuration and Functions**....5
**6 Specifications**....6
6.1 Absolute Maximum Ratings....6
6.2 ESD Ratings....6
6.3 Recommended Operating Conditions....7
6.4 Thermal Information....8
6.5 Power Ratings....8
6.6 Insulation Specifications....9
6.7 Safety-Related Certifications....11
6.8 Safety Limiting Values....11
6.9 Electrical Characteristics—5-V Supply....13
6.10 Supply Current Characteristics—5-V Supply....13
6.11 Electrical Characteristics—3.3-V Supply....14
6.12 Supply Current Characteristics—3.3-V Supply....14
6.13 Electrical Characteristics—2.5-V Supply....15
6.14 Supply Current Characteristics—2.5-V Supply....15
6.15 Switching Characteristics—5-V Supply....16
6.16 Switching Characteristics—3.3-V Supply....16
6.17 Switching Characteristics—2.5-V Supply....17
6.18 Insulation Characteristics Curves....18
6.19 Typical Characteristics....19
**7 Parameter Measurement Information**....21
**8 Detailed Description**....22
8.1 Overview....22
8.2 Functional Block Diagram....22
8.3 Feature Description....23
8.4 Device Functional Modes....24
**9 Application and Implementation**....25
9.1 Application Information....25
9.2 Typical Application....25
**10 Power Supply Recommendations**....29
**11 Layout**....30
11.1 Layout Guidelines....30
11.2 Layout Example....30
**12 Device and Documentation Support**....31
12.1 Device Support....31
12.2 Documentation Support....31
12.3 Related Links....31
12.4 Receiving Notification of Documentation Updates....31
12.5 Support Resources....31
12.6 Trademarks....31
12.7 Electrostatic Discharge Caution....32
12.8 Glossary....32
**13 Mechanical, Packaging, and Orderable Information**....32

## 4 Revision History

NOTE: Page numbers for previous revisions may differ from page numbers in the current version.

**Changes from Revision B (October 2020) to Revision C (December 2023)** — **Page**

- Changed standard name from: "DIN V VDE V 0884-11:2017-01" to: "DIN EN IEC 60747-17 (VDE 0884-17)" throughout the document....1
- Removed references to standard IEC/EN/CSA 60950-1 throughout the document....1
- Removed standard revision and year references from all standard names throughout the document....1
- Updated numbering format for tables, figures and cross-references throughout document....1
- Updated Thermal Characteristics, Safety Limiting Values, and Thermal Derating Curves to provide more accurate system-level thermal calculations....6
- Updated electrical and switching characteristics to match device performance....6
- Updated Climatic category for D package....9
- Updated Maximum working voltages for DW-16 and D-8....11
- Changed working voltage lifetime margin from: 87.5% to: 50%, minimum required insulation lifetime from: 37.5 years to: 30 years and insulation lifetime per TDDB from: 135 years to: 169 years per DIN EN IEC 60747-17 (VDE 0884-17)....27
- Changed Figure 9-6 per DIN EN IEC 60747-17 (VDE 0884-17)....27

**Changes from Revision A (April 2020) to Revision B (October 2020)** — **Page**

- Added Functional Safety bullets....1
- Added D-8 values for TUV column....11
- Changed minimum CMTI value from 40 kV/µs to 85 kV/µs throughout the document....13

**Changes from Revision * (March 2016) to Revision A (April 2020)** **Page**

- Made editorial and cosmetic changes throughout the document ..... 1
- Changed From: "Isolation Barrier Life: >40 Years" To:">100-Year Projected Lifetime at 1.5 $kV_{RMS}$ Working Voltage" in Section 1 ..... 1
- Added "Up to 5000 $V_{RMS}$ Isolation Rating" in Section 1 ..... 1
- Added "Up to 12.8 kV Surge Capability" in Section 1 ..... 1
- Added "±8 kV IEC 61000-4-2 Contact Discharge Protection across Isolation Barrier" in Section 1 ..... 1
- Updated certification-related bullets in Section 1 and changed VDE standard name From: DIN V VDE V 0884-10 (VDE V 0884-10):2006-12 To: DIN VDE V 0884-11:2017-01 throughout the document ..... 1
- Updated Section 2 list ..... 1
- Updated Simplified Schematic to show two isolation capacitors in series per channel instead of a single isolation capacitor ..... 1
- Added Climatic category to table ..... 9
- Updated CSA column and changed DW package to (DW-16) ..... 11
- Changed $t_{ie}$ TYP value from 1.5 to 1 throughout the document ..... 16
- Switched the line colors for $V_{CC}$ at 2.5 V and $V_{CC}$ at 3.3 V in the *Low-Level Output Voltage vs Low-Level Output Current* graph ..... 19
- Deleted EN from the *Common-Mode Transient Immunity Test Circuit* figure ..... 21
- Corrected ground symbols for "Input (Devices with F suffix)" in Section 8.4.1 ..... 24
- Added Section 9.2.3.1 sub-section under Section 9.2.3 section ..... 27
- Added '*How to use isolation to improve ESD, EFT and Surge immunity in industrial systems*' application report to Section 12.2 section ..... 31


Copyright © 2025 Texas Instruments Incorporated

## 5 Pin Configuration and Functions

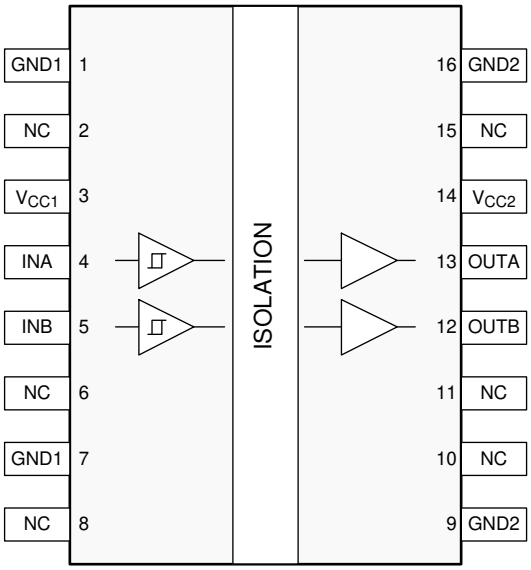


**Figure 5-1. ISO7720-Q1 DW Package 16-Pin SOIC Top View**

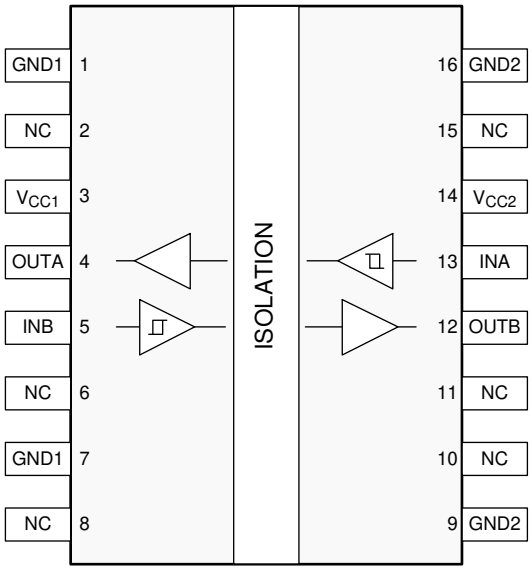


**Figure 5-2. ISO7721-Q1 DW Package 16-Pin SOIC Top View**

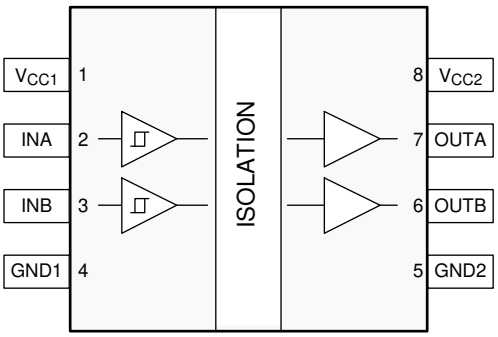


**Figure 5-3. ISO7720-Q1 D and DWV Package 8-Pin SOIC Top View**

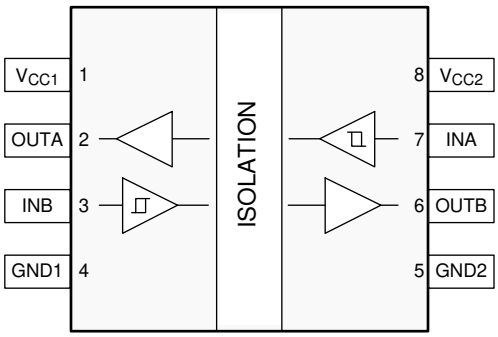


**Figure 5-4. ISO7721-Q1 D and DWV Package 8-Pin SOIC Top View**

**Table 5-1. Pin Functions**

| PIN | | | | | I/O | DESCRIPTION |
|---|---|---|---|---|---|---|
| NAME | DW PACKAGE | | D, DWV PACKAGE | | | |
| | ISO7720-Q1 | ISO7721-Q1 | ISO7720-Q1 | ISO7721-Q1 | | |
| GND1 | 1, 7 | 1, 7 | 4 | 4 | — | Ground connection for $V_{CC1}$ |
| GND2 | 9<br>16 | 9<br>16 | 5 | 5 | — | Ground connection for $V_{CC2}$ |
| INA | 4 | 13 | 2 | 7 | I | Input, channel A |
| INB | 5 | 5 | 3 | 3 | I | Input, channel B |
| NC | 2, 6, 8, 10, 11, 15 | 2, 6, 8, 10, 11, 15 | — | — | — | Not connected |
| OUTA | 13 | 4 | 7 | 2 | O | Output, channel A |
| OUTB | 12 | 12 | 6 | 6 | O | Output, channel B |
| $V_{CC1}$ | 3 | 3 | 1 | 1 | — | Power supply, $V_{CC1}$ |
| $V_{CC2}$ | 14 | 14 | 8 | 8 | — | Power supply, $V_{CC2}$ |

Copyright © 2025 Texas Instruments Incorporated

# 6 Specifications

## 6.1 Absolute Maximum Ratings

See[1]

| | | MIN | MAX | UNIT |
|---|---|---|---|---|
| $V_{CC1}$, $V_{CC2}$ | Supply voltage[2] | -0.5 | 6 | V |
| V | Voltage at INx, OUTx | -0.5 | $V_{CCX}$ + 0.5 [3] | V |
| $I_O$ | Output current | -15 | 15 | mA |
| $T_J$ | Junction temperature | | 150 | °C |
| $T_{stg}$ | Storage temperature | -65 | 150 | °C |

(1) Stresses beyond those listed under Absolute Maximum Ratings may cause permanent damage to the device. These are stress ratings only, which do not imply functional operation of the device at these or any other conditions beyond those indicated under Recommended Operating Conditions. Exposure to absolute-maximum-rated conditions for extended periods may affect device reliability.
(2) All voltage values except differential I/O bus voltages are with respect to the local ground terminal (GND1 or GND2) and are peak voltage values
(3) Maximum voltage must not exceed 6 V.

## 6.2 ESD Ratings

| | | | VALUE | UNIT |
|---|---|---|---|---|
| $V_{ESD}$ | Electrostatic discharge | Human body model (HBM), per AEC Q100-002 [1] | ±6000 | V |
| | | Charged device model (CDM),per AEC Q100-011 | ±1500 | |
| | | Contact discharge per IEC 61000-4-2; Isolation barrier withstand test[2] [3] | ±8000 | |

(1) AEC Q100-002 indicates that HBM stressing shall be in accordance with the ANSI/ESDA/JEDEC JS-001 specification.
(2) IEC ESD strike is applied across the barrier with all pins on each side tied together creating a two-terminal device.
(3) Testing is carried out in air or oil to determine the intrinsic contact discharge capability of the device.


Copyright © 2025 Texas Instruments Incorporated

## 6.3 Recommended Operating Conditions

over operating free-air temperature range (unless otherwise noted)

| | | | MIN | NOM | MAX | UNIT |
|---|---|---|---|---|---|---|
| $V_{CC1}$, $V_{CC2}$ (1) | Supply voltage | | 2.25 | | 5.5 | V |
| $V_{CC(UVLO+)}$ | UVLO threshold when supply voltage is rising | | | 2 | 2.25 | V |
| $V_{CC(UVLO-)}$ | UVLO threshold when supply voltage is falling | | 1.7 | 1.8 | | V |
| $V_{HYS(UVLO)}$ | Supply voltage UVLO hysteresis | | 100 | 200 | | mV |
| $I_{OH}$ | High level output current | $V_{CCO}$ = 5 V (2) | -4 | | | mA |
| | | $V_{CCO}$ = 3.3 V | -2 | | | |
| | | $V_{CCO}$ = 2.5 V | -1 | | | |
| $I_{OL}$ | Low level output current | $V_{CCO}$ = 5 V | | | 4 | mA |
| | | $V_{CCO}$ = 3.3 V | | | 2 | |
| | | $V_{CCO}$ = 2.5 V | | | 1 | |
| $V_{IH}$ | High level Input voltage | | 0.7 x $V_{CCI}$ (2) | | $V_{CCI}$ | V |
| $V_{IL}$ | Low level Input voltage | | 0 | | 0.3 x $V_{CCI}$ | V |
| DR(3) | Data Rate | | 0 | | 100 | Mbps |
| $T_A$ | Ambient temperature | | -55 | 25 | 125 | °C |

(1) $V_{CC1}$ and $V_{CC2}$ can be set independent of one another
(2) $V_{CCI}$ = Input-side $V_{CC}$; $V_{CCO}$ = Output-side $V_{CC}$
(3) 100 Mbps is the maximum specified data rate, although higher data rates are possible

## 6.4 Thermal Information

| THERMAL METRIC[1] | | ISO772x-Q1 | | | UNIT |
|---|---|---|---|---|---|
| | | DW (SOIC) | DWV (SOIC) | D (SOIC) | |
| | | 16 PINS | 16 PINS | 8 PINS | |
| $R_{\theta JA}$ | Junction-to-ambient thermal resistance | 86.5 | 84.3 | 137.7 | °C/W |
| $R_{\theta JC(top)}$ | Junction-to-case (top) thermal resistance | 49.6 | 36.3 | 54.9 | °C/W |
| $R_{\theta JB}$ | Junction-to-board thermal resistance | 49.7 | 47.0 | 71.7 | °C/W |
| $\psi_{JT}$ | Junction-to-top characterization parameter | 32.3 | 7.4 | 7.1 | °C/W |
| $\psi_{JB}$ | Junction-to-board characterization parameter | 49.2 | 45.1 | 70.7 | °C/W |
| $R_{\theta JC(bot)}$ | Junction-to-case (bottom) thermal resistance | — | — | — | °C/W |

(1) For more information about traditional and new thermal metrics, see the *Semiconductor and IC Package Thermal Metrics* application report.

## 6.5 Power Ratings

| PARAMETER | | TEST CONDITIONS | MIN | TYP | MAX | UNIT |
|---|---|---|---|---|---|---|
| **ISO7720-Q1** | | | | | | |
| $P_D$ | Maximum power dissipation (both sides) | $V_{CC1} = V_{CC2} = 5.5$ V, $T_J = 150$°C, $C_L = 15$ pF, Input 50-MHz 50% duty cycle square wave | | | 110 | mW |
| $P_{D1}$ | Maximum power dissipation (side-1) | | | | 22 | mW |
| $P_{D2}$ | Maximum power dissipation (side-2) | | | | 88 | mW |
| **ISO7721-Q1** | | | | | | |
| $P_D$ | Maximum power dissipation (both sides) | $V_{CC1} = V_{CC2} = 5.5$ V, $T_J = 150$°C, $C_L = 15$ pF, Input a 50-MHz 50% duty cycle square wave | | | 110 | mW |
| $P_{D1}$ | Maximum power dissipation (side-1) | | | | 55 | mW |
| $P_{D2}$ | Maximum power dissipation (side-2) | | | | 55 | mW |


Copyright © 2025 Texas Instruments Incorporated

## 6.6 Insulation Specifications

| PARAMETER | | TEST CONDITIONS | | VALUE | | | UNIT |
|---|---|---|---|---|---|---|---|
| | | | | DW | DWV | D | |
| **IEC 60664-1** | | | | | | | |
| CLR | External clearance[1] | Shortest terminal-to-terminal distance through air | | 8 | 8.5 | 4 | mm |
| CPG | External creepage[1] | Shortest terminal-to-terminal distance across the package surface | | 8 | 8.5 | 4 | mm |
| DTI | Distance through the insulation | Minimum internal gap (internal clearance) | | 17 | 17 | 17 | µm |
| CTI | Comparative tracking index | DIN EN 60112 (VDE 0303-11); IEC 60112; UL 746A | | >600 | >600 | >600 | V |
| | Material Group | According to IEC 60664-1 | | I | I | I | |
| | Overvoltage category per IEC 60664-1 | Rated mains voltage ≤ 150 $V_{RMS}$ | | I–IV | I–IV | I-IV | |
| | | Rated mains voltage ≤ 300 $V_{RMS}$ | | I–IV | I–IV | I-III | |
| | | Rated mains voltage ≤ 600 $V_{RMS}$ | | I–IV | I–IV | n/a | |
| | | Rated mains voltage ≤ 1000 $V_{RMS}$ | | I-III | I-III | n/a | |
| **DIN EN IEC 60747-17 (VDE 0884-17)**[2] | | | | | | | |
| $V_{IORM}$ | Maximum repetitive peak isolation voltage | AC voltage (bipolar) | ISO772x | 2121 | 2121 | 637 | $V_{PK}$ |
| | | | ISO7721B | 1414 | n/a | n/a | |
| $V_{IOWM}$ | Maximum working isolation voltage | AC voltage; time-dependent dielectric breakdown (TDDB) test, see Figure 9-6 | ISO772x | 1500 | 1500 | 450 | $V_{RMS}$ |
| | | | ISO7721B | 1000 | n/a | n/a | |
| | | DC voltage | ISO772x | 2121 | 2121 | 637 | $V_{DC}$ |
| | | | ISO7721B | 1414 | n/a | n/a | |
| $V_{IOTM}$ | Maximum transient isolation voltage | $V_{TEST} = V_{IOTM}$ , t = 60 s (qualification); $V_{TEST} = 1.2 \times V_{IOTM}$, t = 1 s (100% production) | | 8000 | 7071 | 4242 | $V_{PK}$ |
| $V_{IMP}$ | Maximum impulse voltage [3] | Tested in air, 1.2/50-µs waveform per IEC 62368-1 | ISO772x | 8000 | 8000 | 5000 | $V_{PK}$ |
| | | | ISO7721B | 6000 | n/a | n/a | |
| $V_{IOSM}$ | Maximum surge isolation voltage[4] | $V_{IOSM} \geq 1.3 \times V_{IMP}$; Tested in oil (qualification test), 1.2/50-µs waveform, per IEC 62368-1 | ISO772x | 12800 | 12800 | 10000 | $V_{PK}$ |
| | | | ISO7721B | 7800 | n/a | n/a | $V_{PK}$ |
| $q_{pd}$ | Apparent charge[5] | Method a: After I/O safety test subgroup 2/3, $V_{ini} = V_{IOTM}$, $t_{ini}$ = 60 s; $V_{pd(m)} = 1.2 \times V_{IORM}$ , $t_m$ = 10 s | | ≤ 5 | ≤ 5 | ≤ 5 | pC |
| | | Method a: After environmental tests subgroup 1, $V_{ini} = V_{IOTM}$, $t_{ini}$ = 60 s; | $V_{pd(m)} = 1.6 \times V_{IORM}$, $t_m$ = 10 s (ISO772x) | ≤ 5 | ≤ 5 | ≤ 5 | |
| | | | $V_{pd(m)} = 1.3 \times V_{IORM}$, $t_m$ = 10 s (ISO7721B) | ≤ 5 | n/a | n/a | |
| | | Method b: At routine test (100% production) and preconditioning (type test); $V_{ini} = 1.2 \times V_{IOTM}$, $t_{ini}$ = 1 s; $V_{pd(m)} = 1.875 \times V_{IORM}$ (ISO772x) or $V_{pd(m)} = 1.5 \times V_{IORM}$ (ISO7721B) , $t_m$ = 1 s (method b1) or $V_{pd(m)} = V_{ini}$, $t_m = t_{ini}$ (method b2) | | ≤ 5 | ≤ 5 | ≤ 5 | |
| $C_{IO}$ | Barrier capacitance, input to output[6] | $V_{IO} = 0.4 \times \sin(2\pi ft)$, f = 1 MHz | | ~0.5 | ~0.5 | ~0.5 | pF |
| $R_{IO}$ | Isolation resistance[6] | $V_{IO}$ = 500 V, $T_A$ = 25°C | | > $10^{12}$ | > $10^{12}$ | > $10^{12}$ | Ω |
| | | $V_{IO}$ = 500 V, 100°C ≤ $T_A$ ≤ 125°C | | > $10^{11}$ | > $10^{11}$ | > $10^{11}$ | |
| | | $V_{IO}$ = 500 V at $T_S$ = 150°C | | > $10^9$ | > $10^9$ | > $10^9$ | |
| | Pollution degree | | | 2 | 2 | 2 | |
| | Climatic category | | | 55/125/21 | 55/125/21 | 55/125/21 | |
| **UL 1577** | | | | | | | |

| PARAMETER | | TEST CONDITIONS | VALUE | | | UNIT |
|---|---|---|---|---|---|---|
| | | | DW | DWV | D | |
| $V_{ISO}$ | Withstand isolation voltage | $V_{TEST} = V_{ISO}$ , t = 60 s (qualification);<br>$V_{TEST} = 1.2 \times V_{ISO}$ , t = 1 s (100% production) | 5000 | 5000 | 3000 | $V_{RMS}$ |

(1) Creepage and clearance requirements should be applied according to the specific equipment isolation standards of an application. Care should be taken to maintain the creepage and clearance distance of a board design to ensure that the mounting pads of the isolator on the printed-circuit board do not reduce this distance. Creepage and clearance on a printed-circuit board become equal in certain cases. Techniques such as inserting grooves, ribs, or both on a printed circuit board are used to help increase these specifications.
(2) This coupler is suitable for *safe electrical insulation (ISO772x) and basic electrical insulation (ISO7721B)* only within the safety ratings. Compliance with the safety ratings shall be ensured by means of suitable protective circuits.
(3) Testing is carried out in air to determine the surge immunity of the package
(4) Testing is carried out in oil to determine the intrinsic surge immunity of the isolation barrier.
(5) Apparent charge is electrical discharge caused by a partial discharge (pd).
(6) All pins on each side of the barrier tied together creating a two-pin device.


Copyright © 2025 Texas Instruments Incorporated

## 6.7 Safety-Related Certifications

| VDE | CSA | UL | CQC | TUV |
|---|---|---|---|---|
| Certified according to DIN EN IEC 60747-17 (VDE 0884-17) | Certified according to IEC 62368-1 and IEC 60601-1 | Recognized under UL 1577 Component Recognition Program | Certified according to GB4943.1 | Certified according to EN 61010-1 and EN 62368-1 |
| Maximum transient isolation voltage, 8000 $V_{PK}$ (DW-16), 7071 $V_{PK}$ (DWV-8) and 4242 $V_{PK}$ (D-8);<br>Maximum repetitive peak isolation voltage, 2121 $V_{PK}$ (DW-16, DWV-8, Reinforced), 1414 $V_{PK}$ (DW-16, Basic) and 637 $V_{PK}$ (D-8);<br>Maximum surge isolation voltage, 12800 $V_{PK}$ (DW-16, DWV-8, Reinforced), 7800 $V_{PK}$ (DW-16, Basic) and 10000 $V_{PK}$ (D-8) | 600 $V_{RMS}$ (DW-16) and 600 $V_{RMS}$ (DWV-8) reinforced insulation and 400 $V_{RMS}$ (D-8) basic insulation working voltage per CSA 62368-1 and IEC 62368-1, (pollution degree 2, material group I);<br>2 MOPP (Means of Patient Protection) per CSA 60601-1 and IEC 60601-1, 250 $V_{RMS}$ (DW-16, DWV-8) max working voltage | DW-16, DWV-8: Single protection, 5000 $V_{RMS}$;<br>D-8: Single protection, 3000 $V_{RMS}$ | DW-16, DWV-8: Reinforced Insulation, Altitude ≤ 5000 m, Tropical Climate,700 $V_{RMS}$ maximum working voltage;<br>D-8: Basic Insulation, Altitude ≤ 5000 m, Tropical Climate, 400 $V_{RMS}$ maximum working voltage | 5000 $V_{RMS}$ (DW-16, DWV-8) and 3000 $V_{RMS}$ (D-8) Reinforced insulation per EN 61010-1 up to working voltage of 600 $V_{RMS}$ (DW-16, DWV-8) and 300 $V_{RMS}$ (D-8)<br>5000 $V_{RMS}$ (DW-16, DWV-8) and 3000 $V_{RMS}$ (D-8) Reinforced insulation per EN 62368-1 up to working voltage of 600 $V_{RMS}$ (DW-16, DWV-8) and 400 $V_{RMS}$ (D-8) |
| Certificate numbers:<br>40040142 (Reinforced)<br>40047657 (Basic) | Master contract number: 220991 | File number: E181974 | Certificate numbers:<br>CQC21001304083 (DW-16)<br>CQC18001199096 (DWV-8)<br>CQC15001121656 (D-8) | Client ID number: 77311 |

## 6.8 Safety Limiting Values

Safety limiting[(1)] intends to minimize potential damage to the isolation barrier upon failure of input or output circuitry.

| PARAMETER | | TEST CONDITIONS | MIN | TYP | MAX | UNIT |
|---|---|---|---|---|---|---|
| **DW-16 PACKAGE** | | | | | | |
| $I_S$ | Safety input, output, or supply current | $R_{\theta JA}$ =86.5°C/W, $V_I$ = 5.5 V, $T_J$ = 150°C, $T_A$ = 25°C, see Figure 6-1 | | | 263 | mA |
| | | $R_{\theta JA}$ = 86.5°C/W, $V_I$ = 3.6 V, $T_J$ = 150°C, $T_A$ = 25°C, see Figure 6-1 | | | 401 | |
| | | $R_{\theta JA}$ = 86.5°C/W, $V_I$ = 2.75 V, $T_J$ = 150°C, $T_A$ = 25°C, see Figure 6-1 | | | 525 | |
| $P_S$ | Safety input, output, or total power | $R_{\theta JA}$ = 86.5°C/W, $T_J$ = 150°C, $T_A$ = 25°C, see Figure 6-2 | | | 1445 | mW |
| $T_S$ | Maximum safety temperature | | | | 150 | °C |
| **DWV-8 PACKAGE** | | | | | | |
| $I_S$ | Safety input, output, or supply current [(1)] | $R_{\theta JA}$ =84.3°C/W, $V_I$ = 5.5 V, $T_J$ = 150°C, $T_A$ = 25°C, see Figure 6-3 | | | 270 | mA |
| | | $R_{\theta JA}$ = 84.3°C/W, $V_I$ = 3.6 V, $T_J$ = 150°C, $T_A$ = 25°C, see Figure 6-3 | | | 412 | |
| | | $R_{\theta JA}$ = 84.3°C/W, $V_I$ = 2.75 V, $T_J$ = 150°C, $T_A$ = 25°C, see Figure 6-3 | | | 539 | |
| $P_S$ | Safety input, output, or total power [(1)] | $R_{\theta JA}$ = 84.3°C/W, $T_J$ = 150°C, $T_A$ = 25°C, see Figure 6-4 | | | 1483 | mW |
| $T_S$ | Maximum safety temperature [(1)] | | | | 150 | °C |
| **D-8 PACKAGE** | | | | | | |

Safety limiting[(1)] intends to minimize potential damage to the isolation barrier upon failure of input or output circuitry.

| PARAMETER | | TEST CONDITIONS | MIN | TYP | MAX | UNIT |
|---|---|---|---|---|---|---|
| $I_S$ | Safety input, output, or supply current [(1)] | $R_{\theta JA}$ =137.7°C/W, $V_I$ = 5.5 V, $T_J$ = 150°C, $T_A$ = 25°C, see Figure 6-5 | | | 165 | mA |
| | | $R_{\theta JA}$ = 137.7°C/W, $V_I$ = 3.6 V, $T_J$ = 150°C, $T_A$ = 25°C, see Figure 6-5 | | | 252 | |
| | | $R_{\theta JA}$ = 137.7°C/W, $V_I$ = 2.75 V, $T_J$ = 150°C, $T_A$ = 25°C, see Figure 6-5 | | | 330 | |
| $P_S$ | Safety input, output, or total power [(1)] | $R_{\theta JA}$ = 137.7°C/W, $T_J$ = 150°C, $T_A$ = 25°C, see Figure 6-6 | | | 908 | mW |
| $T_S$ | Maximum safety temperature [(1)] | | | | 150 | °C |

(1) The maximum safety temperature, $T_S$, has the same value as the maximum junction temperature, $T_J$, specified for the device. The $I_S$ and $P_S$ parameters represent the safety current and safety power respectively. The maximum limits of $I_S$ and $P_S$ should not be exceeded. These limits vary with the ambient temperature, $T_A$.
The junction-to-air thermal resistance, $R_{\theta JA}$, in Section 6.4 is that of a device installed on a high-K test board for leaded surface-mount packages. Use these equations to calculate the value for each parameter:
$T_J = T_A + R_{\theta JA} \times P$, where P is the power dissipated in the device.
$T_{J(max)} = T_S = T_A + R_{\theta JA} \times P_S$, where $T_{J(max)}$ is the maximum allowed junction temperature.
$P_S = I_S \times V_I$, where $V_I$ is the maximum input voltage.


Copyright © 2025 Texas Instruments Incorporated

## 6.9 Electrical Characteristics—5-V Supply

$V_{CC1}$ = $V_{CC2}$ = 5 V ± 10% (over recommended operating conditions unless otherwise noted)

| PARAMETER | | TEST CONDITIONS | MIN | TYP | MAX | UNIT |
|---|---|---|---|---|---|---|
| $V_{OH}$ | High-level output voltage | $I_{OH}$ = -4 mA; see Figure 7-1 | $V_{CCO}$ - 0.4 (1) | 4.8 | | V |
| $V_{OL}$ | Low-level output voltage | $I_{OL}$ = 4 mA; see Figure 7-1 | | 0.2 | 0.4 | V |
| $V_{IT+(IN)}$ | Rising input threshold voltage | | | 0.6 x $V_{CCI}$ | 0.7 x $V_{CCI}$ (1) | V |
| $V_{IT-(IN)}$ | Falling input threshold voltage | | 0.3 x $V_{CCI}$ | 0.4 x $V_{CCI}$ | | V |
| $V_{I(HYS)}$ | Input threshold voltage hysteresis | | 0.1 x $V_{CCI}$ | 0.2 x $V_{CCI}$ | | V |
| $I_{IH}$ | High-level input current | $V_{IH}$ = $V_{CCI}$ (1) at INx | | | 10 | µA |
| $I_{IL}$ | Low-level input current | $V_{IL}$ = 0 V at INx | -10 | | | µA |
| CMTI | Common mode transient immunity | $V_I$ = $V_{CCI}$ or 0 V, $V_{CM}$ = 1200 V; see Figure 7-3 | 85 | 100 | | kV/µs |
| $C_I$ | Input Capacitance (2) | $V_I$ = $V_{CC}$/ 2 + 0.4×sin(2πft), f = 1 MHz, $V_{CC}$ = 5 V | | 2 | | pF |

(1) $V_{CCI}$ = Input-side $V_{CC}$; $V_{CCO}$ = Output-side $V_{CC}$
(2) Measured from input pin to same side ground.

## 6.10 Supply Current Characteristics—5-V Supply

$V_{CC1}$ = $V_{CC2}$ = 5 V ± 10% (over recommended operating conditions unless otherwise noted)

| PARAMETER | TEST CONDITIONS | | SUPPLY CURRENT | MIN | TYP | MAX | UNIT |
|---|---|---|---|---|---|---|---|
| **ISO7720-Q1** | | | | | | | |
| Supply current - DC signal | $V_I$ = $V_{CCI}$ (1)(ISO7720-Q1), $V_I$ = 0 V (ISO7720-Q1 with F suffix) | | $I_{CC1}$ | | 0.8 | 1.6 | mA |
| | | | $I_{CC2}$ | | 1.1 | 2 | |
| | $V_I$ = 0V (ISO7720-Q1), $V_I$ = $V_{CCI}$ (ISO7720-Q1 with F suffix) | | $I_{CC1}$ | | 2.9 | 4.2 | |
| | | | $I_{CC2}$ | | 1.2 | 2.1 | |
| Supply current - AC signal | All channels switching with square wave clock input; $C_L$ = 15 pF | 1 Mbps | $I_{CC1}$ | | 1.8 | 2.8 | |
| | | | $I_{CC2}$ | | 1.3 | 2.2 | |
| | | 10 Mbps | $I_{CC1}$ | | 1.9 | 2.9 | |
| | | | $I_{CC2}$ | | 2.2 | 3.5 | |
| | | 100 Mbps | $I_{CC1}$ | | 2.5 | 3.7 | |
| | | | $I_{CC2}$ | | 11.6 | 15.7 | |
| **ISO7721-Q1** | | | | | | | |
| Supply current - DC signal | $V_I$ = $V_{CCI}$ (1)(ISO7721-Q1); $V_I$ = 0 V (ISO7721-Q1 with F suffix) | | $I_{CC1}$, $I_{CC2}$ | | 1 | 2.2 | mA |
| | $V_I$ = 0 V (ISO7721-Q1); $V_I$ = $V_{CCI}$ (ISO7721-Q1 with F suffix) | | $I_{CC1}$, $I_{CC2}$ | | 2.2 | 3.4 | |
| Supply current - AC signal | All channels switching with square wave clock input; $C_L$ = 15 pF | 1 Mbps | $I_{CC1}$, $I_{CC2}$ | | 1.7 | 2.9 | |
| | | 10 Mbps | $I_{CC1}$, $I_{CC2}$ | | 2.2 | 3.5 | |
| | | 100 Mbps | $I_{CC1}$, $I_{CC2}$ | | 7.3 | 9.9 | |

(1) $V_{CCI}$ = Input-side $V_{CC}$

## 6.11 Electrical Characteristics—3.3-V Supply

$V_{CC1}$ = $V_{CC2}$ = 3.3 V ± 10% (over recommended operating conditions unless otherwise noted)

| PARAMETER | | TEST CONDITIONS | MIN | TYP | MAX | UNIT |
|---|---|---|---|---|---|---|
| $V_{OH}$ | High-level output voltage | $I_{OH}$ = -2mA ; see Figure 7-1 | $V_{CCO}$ - 0.3[(1)] | 3.2 | | V |
| $V_{OL}$ | Low-level output voltage | $I_{OL}$ = 2mA ; see Figure 7-1 | | 0.1 | 0.3 | V |
| $V_{IT+(IN)}$ | Rising input threshold voltage | | | 0.6 x $V_{CCI}$ | 0.7 x $V_{CCI}$ [(1)] | V |
| $V_{IT-(IN)}$ | Falling input threshold voltage | | 0.3 x $V_{CCI}$ | 0.4 x $V_{CCI}$ | | V |
| $V_{I(HYS)}$ | Input threshold voltage hysteresis | | 0.1 x $V_{CCI}$ | 0.2 x $V_{CCI}$ | | V |
| $I_{IH}$ | High-level input current | $V_{IH}$ = $V_{CCI}$ [(1)] at INx | | | 10 | µA |
| $I_{IL}$ | Low-level input current | $V_{IL}$ = 0 V at INx | -10 | | | µA |
| CMTI | Common mode transient immunity | $V_I$ = $V_{CCI}$ or 0 V, $V_{CM}$ = 1200 V; see Figure 7-3 | 85 | 100 | | kV/µs |

(1) $V_{CCI}$ = Input-side $V_{CC}$; $V_{CCO}$ = Output-side $V_{CC}$

## 6.12 Supply Current Characteristics—3.3-V Supply

$V_{CC1}$ = $V_{CC2}$ = 3.3 V ± 10% (over recommended operating conditions unless otherwise noted)

| PARAMETER | TEST CONDITIONS | | SUPPLY CURRENT | MIN | TYP | MAX | UNIT |
|---|---|---|---|---|---|---|---|
| **ISO7720-Q1** | | | | | | | |
| Supply current - DC signal | $V_I$ = $V_{CCI}$ [(1)] (ISO7720-Q1), $V_I$ = 0 V (ISO7720-Q1 with F suffix) | | $I_{CC1}$ | | 0.8 | 1.5 | mA |
| | | | $I_{CC2}$ | | 1.1 | 1.9 | |
| | $V_I$ = 0V (ISO7720), $V_I$ = $V_{CCI}$ (ISO7720-Q1 with F suffix) | | $I_{CC1}$ | | 2.9 | 4.2 | |
| | | | $I_{CC2}$ | | 1.2 | 2.1 | |
| Supply current - AC signal | All channels switching with square wave clock input; $C_L$ = 15 pF | 1 Mbps | $I_{CC1}$ | | 1.8 | 2.7 | |
| | | | $I_{CC2}$ | | 1.2 | 2.1 | |
| | | 10 Mbps | $I_{CC1}$ | | 1.9 | 2.8 | |
| | | | $I_{CC2}$ | | 1.9 | 3 | |
| | | 100 Mbps | $I_{CC1}$ | | 2.2 | 3.3 | |
| | | | $I_{CC2}$ | | 8.6 | 11.7 | |
| **ISO7721-Q1** | | | | | | | |
| Supply current - DC signal | $V_I$ = $V_{CCI}$ [(1)] (ISO7721-Q1), $V_I$ = 0 V (ISO7721-Q1 with F suffix) | | $I_{CC1}$, $I_{CC2}$ | | 1 | 2.1 | mA |
| | $V_I$ = 0 V (ISO7721-Q1), $V_I$ = $V_{CCI}$ (ISO7721-Q1 with F suffix) | | $I_{CC1}$, $I_{CC2}$ | | 2.2 | 3.4 | |
| Supply current - AC signal | All channels switching with square wave clock input; $C_L$ = 15 pF | 1 Mbps | $I_{CC1}$, $I_{CC2}$ | | 1.6 | 2.8 | |
| | | 10 Mbps | $I_{CC1}$, $I_{CC2}$ | | 2 | 3.2 | |
| | | 100 Mbps | $I_{CC1}$, $I_{CC2}$ | | 5.6 | 7.8 | |

(1) $V_{CCI}$ = Input-side $V_{CC}$


Copyright © 2025 Texas Instruments Incorporated

## 6.13 Electrical Characteristics—2.5-V Supply

$V_{CC1}$ = $V_{CC2}$ = 2.5 V ± 10% (over recommended operating conditions unless otherwise noted)

| PARAMETER | | TEST CONDITIONS | MIN | TYP | MAX | UNIT |
|---|---|---|---|---|---|---|
| $V_{OH}$ | High-level output voltage | $I_{OH}$ = -1mA ; see Figure 7-1 | $V_{CCO}$ - 0.2[(1)] | 2.45 | | V |
| $V_{OL}$ | Low-level output voltage | $I_{OL}$ = 1mA ; see Figure 7-1 | | 0.05 | 0.2 | V |
| $V_{IT+(IN)}$ | Rising input threshold voltage | | | 0.6 x $V_{CCI}$ | 0.7 x $V_{CCI}$ [(1)] | V |
| $V_{IT-(IN)}$ | Falling input threshold voltage | | 0.3 x $V_{CCI}$ | 0.4 x $V_{CCI}$ | | V |
| $V_{I(HYS)}$ | Input threshold voltage hysteresis | | 0.1 x $V_{CCI}$ | 0.2 x $V_{CCI}$ | | V |
| $I_{IH}$ | High-level input current | $V_{IH}$ = $V_{CCI}$ [(1)] at INx | | | 10 | µA |
| $I_{IL}$ | Low-level input current | $V_{IL}$ = 0 V at INx | -10 | | | µA |
| CMTI | Common mode transient immunity | $V_I$ = $V_{CCI}$ or 0 V, $V_{CM}$ = 1200 V, see Figure 7-3 | 85 | 100 | | kV/µs |

(1) $V_{CCI}$ = Input-side $V_{CC}$; $V_{CCO}$ = Output-side $V_{CC}$

## 6.14 Supply Current Characteristics—2.5-V Supply

$V_{CC1}$ = $V_{CC2}$ = 2.5 V ± 10% (over recommended operating conditions unless otherwise noted)

| PARAMETER | TEST CONDITIONS | | SUPPLY CURRENT | MIN | TYP | MAX | UNIT |
|---|---|---|---|---|---|---|---|
| **ISO7720-Q1** | | | | | | | |
| Supply current - DC signal | $V_I$ = $V_{CCI}$ [(1)](ISO7720-Q1), $V_I$ = 0 V (ISO7720-Q1 with F suffix) | | $I_{CC1}$ | | 0.8 | 1.5 | mA |
| | | | $I_{CC2}$ | | 1.1 | 1.9 | |
| | $V_I$ = 0V (ISO7720-Q1), $V_I$ = $V_{CCI}$ (ISO7720-Q1 with F suffix) | | $I_{CC1}$ | | 2.9 | 4.2 | |
| | | | $I_{CC2}$ | | 1.2 | 2.1 | |
| Supply current - AC signal | All channels switching with square wave clock input; $C_L$ = 15 pF | 1 Mbps | $I_{CC1}$ | | 1.8 | 2.7 | |
| | | | $I_{CC2}$ | | 1.3 | 2 | |
| | | 10 Mbps | $I_{CC1}$ | | 1.9 | 2.7 | |
| | | | $I_{CC2}$ | | 1.7 | 2.8 | |
| | | 100 Mbps | $I_{CC1}$ | | 2.2 | 3.1 | |
| | | | $I_{CC2}$ | | 6.8 | 9.4 | |
| **ISO7721-Q1** | | | | | | | |
| Supply current - DC signal | $V_I$ = $V_{CCI}$ [(1)] (ISO7721-Q1); $V_I$ = 0 V (ISO7721-Q1 with F suffix) | | $I_{CC1}$, $I_{CC2}$ | | 1 | 2.1 | mA |
| | $V_I$ = 0 V (ISO7721-Q1); $V_I$ = $V_{CCI}$ (ISO7721-Q1 with F suffix) | | $I_{CC1}$, $I_{CC2}$ | | 2.2 | 3.3 | |
| Supply current - AC signal | All channels switching with square wave clock input; $C_L$ = 15 pF | 1 Mbps | $I_{CC1}$, $I_{CC2}$ | | 1.6 | 2.7 | |
| | | 10 Mbps | $I_{CC1}$, $I_{CC2}$ | | 1.9 | 3.1 | |
| | | 100 Mbps | $I_{CC1}$, $I_{CC2}$ | | 4.6 | 6.5 | |

(1) $V_{CCI}$ = Input-side $V_{CC}$

## 6.15 Switching Characteristics—5-V Supply

$V_{CC1}$ = $V_{CC2}$ = 5 V ± 10% (over recommended operating conditions unless otherwise noted)

| PARAMETER | | TEST CONDITIONS | MIN | TYP | MAX | UNIT |
|---|---|---|---|---|---|---|
| $t_{PLH}$, $t_{PHL}$ | Propagation delay time | See Figure 7-1 | 6 | 11 | 17 | ns |
| PWD | Pulse width distortion(1) $\lvert t_{PHL} – t_{PLH}\rvert$ | | | 0.5 | 5.9 | ns |
| $t_{sk(o)}$ | Channel-to-channel output skew time (2) | Same direction channels | | | 4 | ns |
| $t_{sk(pp)}$ | Part-to-part skew time(3) | | | | 4.5 | ns |
| $t_r$ | Output signal rise time | See Figure 7-1 | | 2.4 | 3.9 | ns |
| $t_f$ | Output signal fall time | | | 2.4 | 3.9 | ns |
| $t_{DO}$ | Default output delay time from input power loss | Measured from the time $V_{CC}$ goes below 1.7V. See Figure 7-2 | | 0.1 | 0.3 | µs |
| $t_{ie}$ | Time interval error | $2^{16}$ – 1 PRBS data at 100 Mbps | | 1 | | ns |

(1) Also known as pulse skew.
(2) $t_{sk(o)}$ is the skew between outputs of a single device with all driving inputs connected together and the outputs switching in the same direction while driving identical loads.
(3) $t_{sk(pp)}$ is the magnitude of the difference in propagation delay times between any terminals of different devices switching in the same direction while operating at identical supply voltages, temperature, input signals and loads.

## 6.16 Switching Characteristics—3.3-V Supply

$V_{CC1}$ = $V_{CC2}$ = 3.3 V ± 10% (over recommended operating conditions unless otherwise noted)

| PARAMETER | | TEST CONDITIONS | MIN | TYP | MAX | UNIT |
|---|---|---|---|---|---|---|
| $t_{PLH}$, $t_{PHL}$ | Propagation delay time | See Figure 7-1 | 6 | 11 | 18.5 | ns |
| PWD | Pulse width distortion(1) $\lvert t_{PHL} – t_{PLH}\rvert$ | | | 0.5 | 5.9 | ns |
| $t_{sk(o)}$ | Channel-to-channel output skew time (2) | Same direction channels | | | 4.4 | ns |
| $t_{sk(pp)}$ | Part-to-part skew time(3) | | | | 5 | ns |
| $t_r$ | Output signal rise time | See Figure 7-1 | | 0.7 | 3 | ns |
| $t_f$ | Output signal fall time | | | 0.7 | 3 | ns |
| $t_{DO}$ | Default output delay time from input power loss | Measured from the time $V_{CC}$ goes below 1.7V. See Figure 7-2 | | 0.1 | 0.3 | µs |
| $t_{ie}$ | Time interval error | $2^{16}$ – 1 PRBS data at 100 Mbps | | 1 | | ns |

(1) Also known as pulse skew.
(2) $t_{sk(o)}$ is the skew between outputs of a single device with all driving inputs connected together and the outputs switching in the same direction while driving identical loads.
(3) $t_{sk(pp)}$ is the magnitude of the difference in propagation delay times between any terminals of different devices switching in the same direction while operating at identical supply voltages, temperature, input signals and loads.


Copyright © 2025 Texas Instruments Incorporated

## 6.17 Switching Characteristics—2.5-V Supply

$V_{CC1}$ = $V_{CC2}$ = 2.5 V ± 10% (over recommended operating conditions unless otherwise noted)

| PARAMETER | | TEST CONDITIONS | MIN | TYP | MAX | UNIT |
|---|---|---|---|---|---|---|
| $t_{PLH}$, $t_{PHL}$ | Propagation delay time | See Figure 7-1 | 7.5 | 12 | 21 | ns |
| PWD | Pulse width distortion[(1)] $\lvert t_{PHL} – t_{PLH} \rvert$ | | | 0.5 | 5.9 | ns |
| $t_{sk(o)}$ | Channel-to-channel output skew time[(2)] | Same direction channels | | | 4.4 | ns |
| $t_{sk(pp)}$ | Part-to-part skew time[(3)] | | | | 5.5 | ns |
| $t_r$ | Output signal rise time | See Figure 7-1 | | 1 | 3.5 | ns |
| $t_f$ | Output signal fall time | | | 1 | 3.5 | ns |
| $t_{DO}$ | Default output delay time from input power loss | Measured from the time $V_{CC}$ goes below 1.7V. See Figure 7-2 | | 0.1 | 0.3 | µs |
| $t_{ie}$ | Time interval error | $2^{16}$ – 1 PRBS data at 100 Mbps | | 1 | | ns |

(1) Also known as pulse skew.
(2) $t_{sk(o)}$ is the skew between outputs of a single device with all driving inputs connected together and the outputs switching in the same direction while driving identical loads.
(3) $t_{sk(pp)}$ is the magnitude of the difference in propagation delay times between any terminals of different devices switching in the same direction while operating at identical supply voltages, temperature, input signals and loads.

## 6.18 Insulation Characteristics Curves

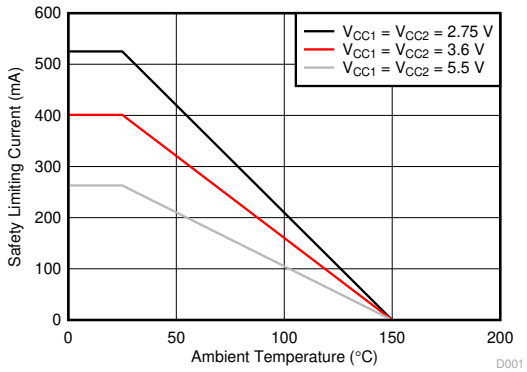


**Figure 6-1. Thermal Derating Curve for Limiting Current per VDE for DW-16 Package**

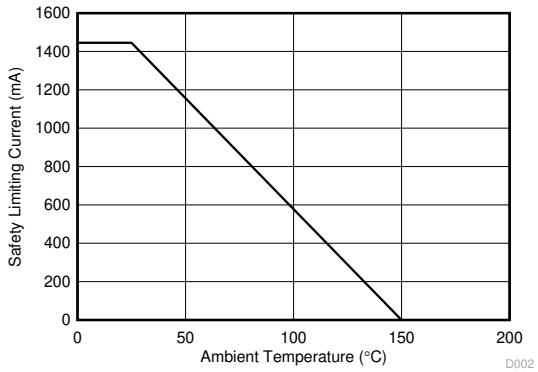


**Figure 6-2. Thermal Derating Curve for Limiting Power per VDE for DW-16 Package**

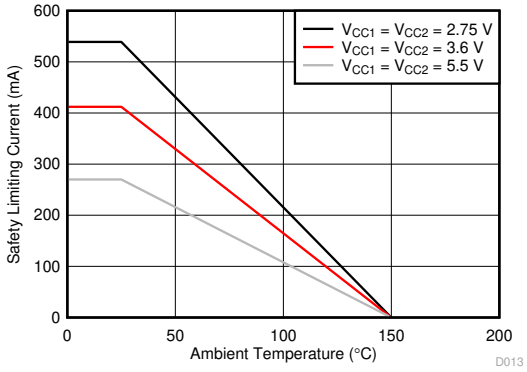


**Figure 6-3. Thermal Derating Curve for Limiting Current per VDE for DWV-8 Package**

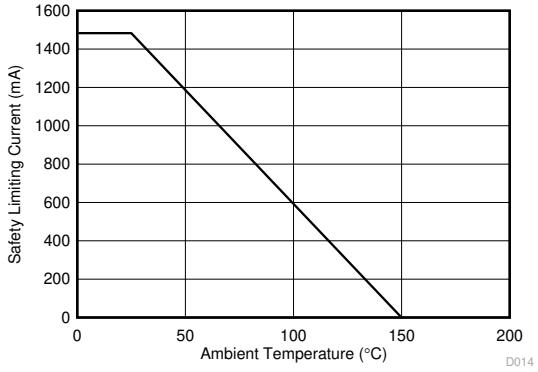


**Figure 6-4. Thermal Derating Curve for Limiting Power per VDE for DWV-8 Package**

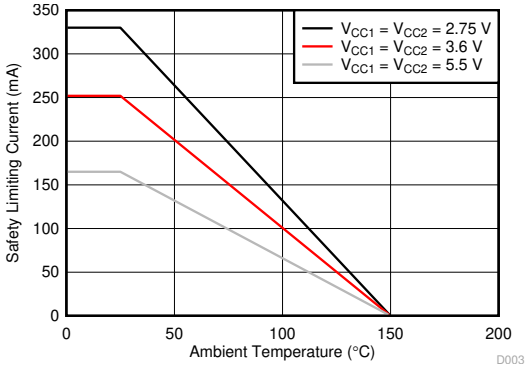


**Figure 6-5. Thermal Derating Curve for Limiting Current per VDE for D-8 Package**

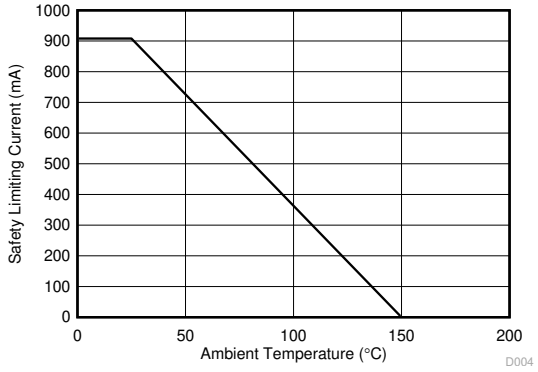


**Figure 6-6. Thermal Derating Curve for Limiting Power per VDE for D-8 Package**


Copyright © 2025 Texas Instruments Incorporated

## 6.19 Typical Characteristics

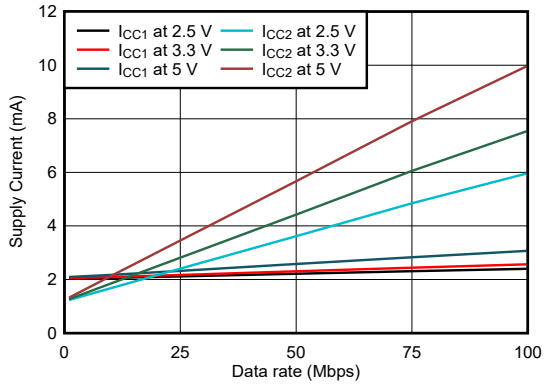


$T_A$ = 25°C $C_L$ = 15 pF

**Figure 6-7. ISO7720-Q1 Supply Current vs Data Rate (With 15-pF Load)**

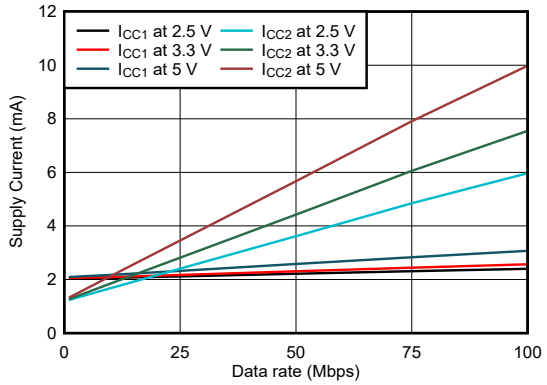


$T_A$ = 25°C $C_L$ = No Load

**Figure 6-8. ISO7720-Q1 Supply Current vs Data Rate (With No Load)**

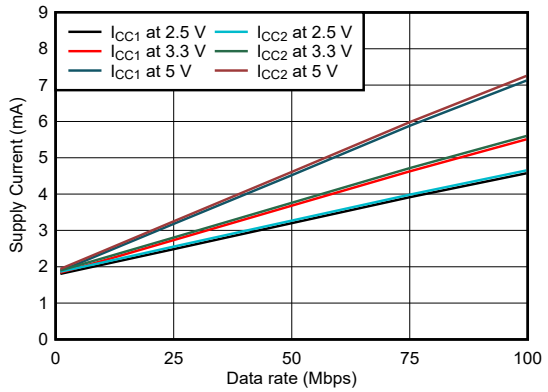


$T_A$ = 25°C $C_L$ = 15 pF

**Figure 6-9. ISO7721-Q1 Supply Current vs Data Rate (With 15-pF Load)**

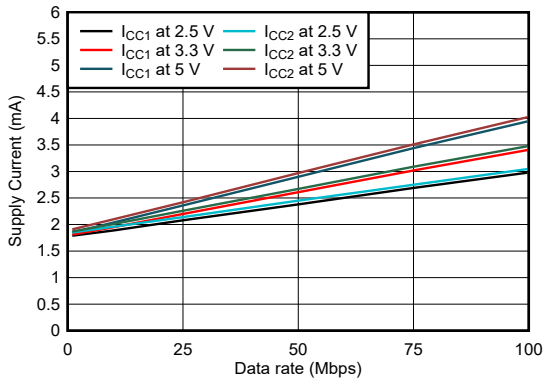


$T_A$ = 25°C $C_L$ = No Load

**Figure 6-10. ISO7721-Q1 Supply Current vs Data Rate (With No Load)**

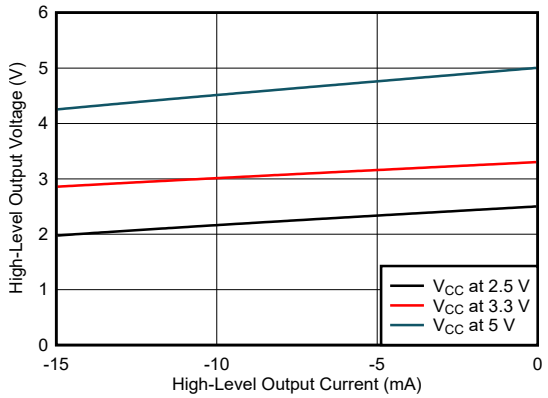


$T_A$ = 25°C

**Figure 6-11. High-Level Output Voltage vs High-level Output Current**

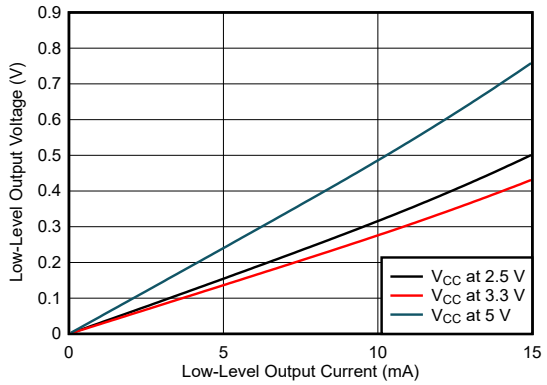


$T_A$ = 25°C

**Figure 6-12. Low-Level Output Voltage vs Low-Level Output Current**

Copyright © 2025 Texas Instruments Incorporated

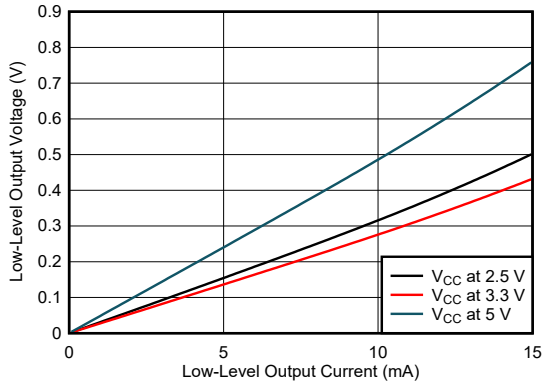


**Figure 6-13. Power Supply Undervoltage Threshold vs Free-Air Temperature**

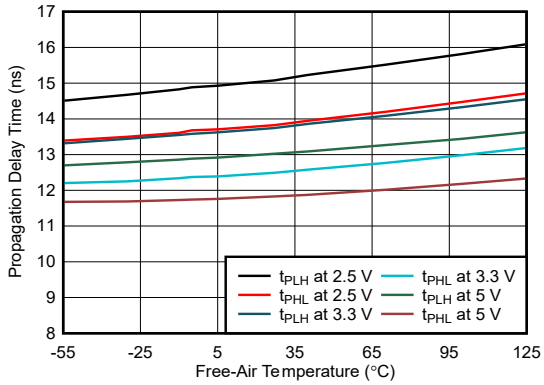


**Figure 6-14. Propagation Delay Time vs Free-Air Temperature**


Copyright © 2025 Texas Instruments Incorporated

# 7 Parameter Measurement Information

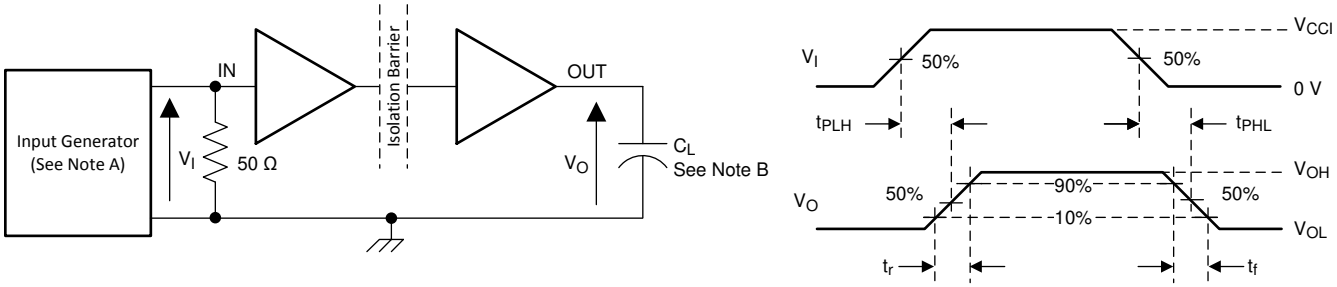


A. The input pulse is supplied by a generator having the following characteristics: PRR ≤ 50 kHz, 50% duty cycle, $t_r$ ≤ 3 ns, $t_f$ ≤ 3 ns, $Z_O$ = 50 Ω. At the input, 50 Ω resistor is required to terminate Input Generator signal. It is not needed in actual application.

B. $C_L$ = 15 pF and includes instrumentation and fixture capacitance within ±20%.

**Figure 7-1. Switching Characteristics Test Circuit and Voltage Waveforms**

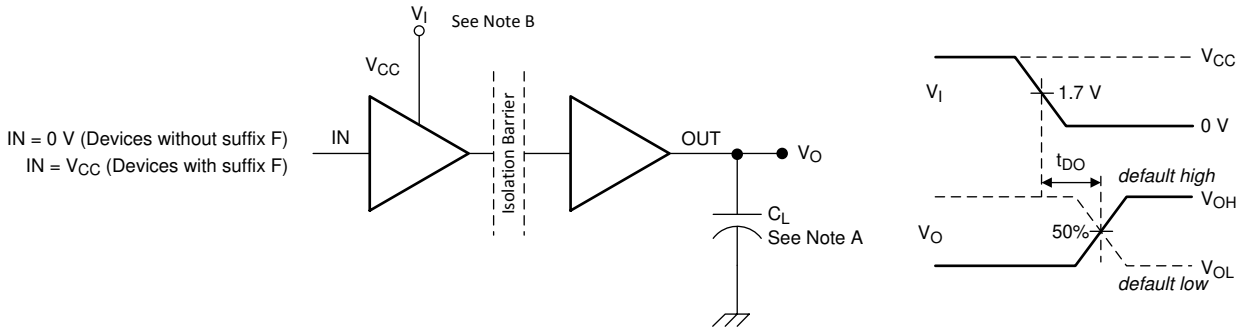


A. $C_L$ = 15 pF and includes instrumentation and fixture capacitance within ±20%.

B. Power Supply Ramp Rate = 10 mV/ns

**Figure 7-2. Default Output Delay Time Test Circuit and Voltage Waveforms**

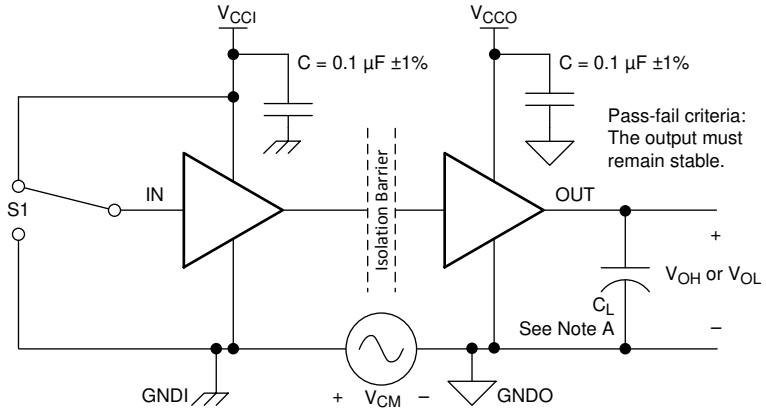


A. $C_L$ = 15 pF and includes instrumentation and fixture capacitance within ±20%.

**Figure 7-3. Common-Mode Transient Immunity Test Circuit**

# 8 Detailed Description

## 8.1 Overview

The ISO772x-Q1 family of devices has an ON-OFF keying (OOK) modulation scheme to transmit the digital data across a silicon dioxide based isolation barrier. The transmitter sends a high frequency carrier across the barrier to represent one digital state and sends no signal to represent the other digital state. The receiver demodulates the signal after advanced signal conditioning and produces the output through a buffer stage. These devices also incorporate advanced circuit techniques to maximize the CMTI performance and minimize the radiated emissions due the high frequency carrier and IO buffer switching. The conceptual block diagram of a digital capacitive isolator, Figure 8-1, shows a functional block diagram of a typical channel.

## 8.2 Functional Block Diagram

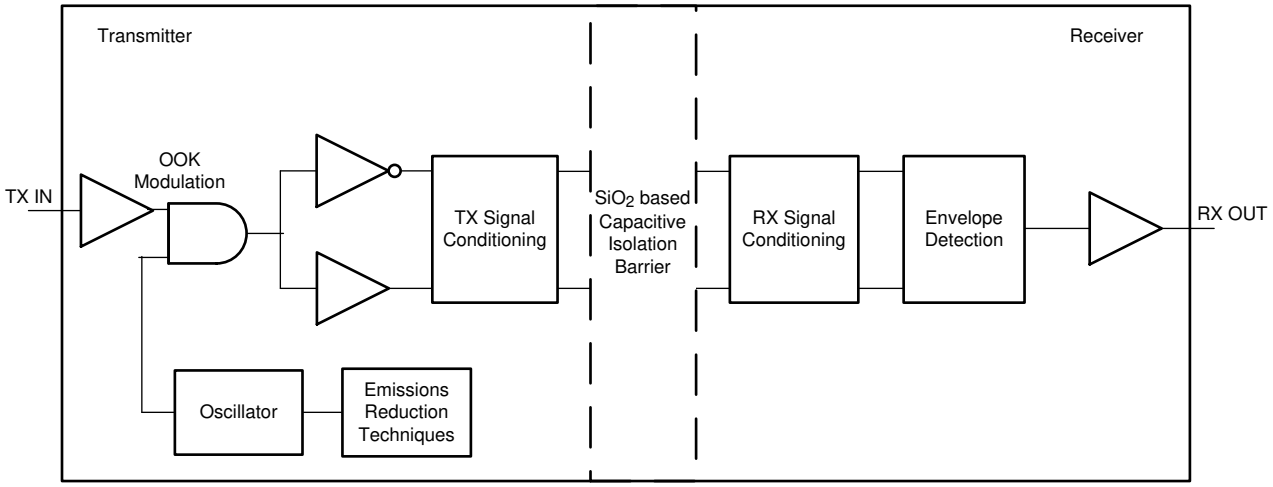


**Figure 8-1. Conceptual Block Diagram of a Digital Capacitive Isolator**

Figure 8-2 shows a conceptual detail of how the OOK scheme works.

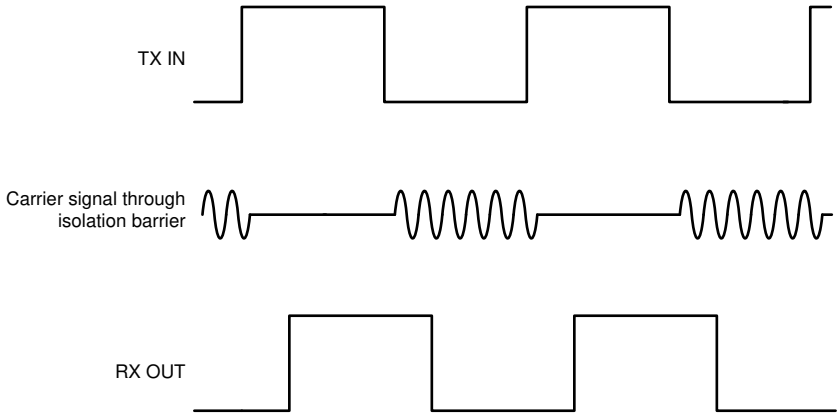


**Figure 8-2. On-Off Keying (OOK) Based Modulation Scheme**


Copyright © 2025 Texas Instruments Incorporated

## 8.3 Feature Description

The ISO772x-Q1 family of devices is available in two channel configurations and default output state options to enable a variety of application uses. Table 8-1 lists the device features of the ISO772x-Q1 devices.

**Table 8-1. Device Features**

| PART NUMBER | MAXIMUM DATA RATE | CHANNEL DIRECTION | DEFAULT OUTPUT STATE | PACKAGE | RATED ISOLATION[(1)] |
|---|---|---|---|---|---|
| ISO7720-Q1 | 100 Mbps | 2 Forward, 0 Reverse | High | DW-16 | 5000 $V_{RMS}$ / 8000 $V_{PK}$ |
| | | | | DWV-8 | 5000 $V_{RMS}$ / 7071 $V_{PK}$ |
| | | | | D-8 | 3000 $V_{RMS}$ / 4242 $V_{PK}$ |
| ISO7720-Q1 with F suffix | 100 Mbps | 2 Forward, 0 Reverse | Low | DW-16 | 5000 $V_{RMS}$ / 8000 $V_{PK}$ |
| | | | | DWV-8 | 5000 $V_{RMS}$ / 7071 $V_{PK}$ |
| | | | | D-8 | 3000 $V_{RMS}$ / 4242 $V_{PK}$ |
| ISO7721-Q1 | 100 Mbps | 1 Forward, 1 Reverse | High | DW-16 | 5000 $V_{RMS}$ / 8000 $V_{PK}$ |
| | | | | DWV-8 | 5000 $V_{RMS}$ / 7071 $V_{PK}$ |
| | | | | D-8 | 3000 $V_{RMS}$ / 4242 $V_{PK}$ |
| ISO7721-Q1 with F suffix | 100 Mbps | 1 Forward, 1 Reverse | Low | DW-16 | 5000 $V_{RMS}$ / 8000 $V_{PK}$ |
| | | | | DWV-8 | 5000 $V_{RMS}$ / 7071 $V_{PK}$ |
| | | | | D-8 | 3000 $V_{RMS}$ / 4242 $V_{PK}$ |

(1) See *Section 6.7* section for detailed isolation ratings.

### *8.3.1 Electromagnetic Compatibility (EMC) Considerations*

Many applications in harsh industrial environment are sensitive to disturbances such as electrostatic discharge (ESD), electrical fast transient (EFT), surge and electromagnetic emissions. These electromagnetic disturbances are regulated by international standards such as IEC 61000-4-x and CISPR 22. Although system-level performance and reliability depends, to a large extent, on the application board design and layout, the ISO772x-Q1 family of devices incorporates many chip-level design improvements for overall system robustness. Some of these improvements include:

- Robust ESD protection cells for input and output signal pins and inter-chip bond pads.
- Low-resistance connectivity of ESD cells to supply and ground pins.
- Enhanced performance of high voltage isolation capacitor for better tolerance of ESD, EFT and surge events.
- Bigger on-chip decoupling capacitors to bypass undesirable high energy signals through a low impedance path.
- PMOS and NMOS devices isolated from each other by using guard rings to avoid triggering of parasitic SCRs.
- Reduced common mode currents across the isolation barrier by ensuring purely differential internal operation.

Copyright © 2025 Texas Instruments Incorporated

## 8.4 Device Functional Modes

Table 8-2 lists the functional modes for the ISO772x-Q1 devices.

**Table 8-2. Function Table**

| $V_{CCI}$ (1) | $V_{CCO}$ | INPUT (INx)(3) | OUTPUT (OUTx) | COMMENTS |
|---|---|---|---|---|
| PU | PU | H | H | Normal Operation:<br>A channel output assumes the logic state of the input. |
| | | L | L | |
| | | Open | Default | Default mode: When INx is open, the corresponding channel output goes to the default logic state. The default is *High* for ISO772x-Q1 and *Low* for ISO772x-Q1 with F suffix. |
| PD | PU | X | Default | Default mode: When $V_{CCI}$ is unpowered, a channel output assumes the logic state based on the selected default option. The default is *High* for ISO772x-Q1 and *Low* for ISO772x-Q1 with F suffix.<br>When $V_{CCI}$ transitions from unpowered to powered-up, a channel output assumes the logic state of the input.<br>When $V_{CCI}$ transitions from powered-up to unpowered, channel output assumes the selected default state. |
| X | PD | X | Undetermined | When $V_{CCO}$ is unpowered, a channel output is undetermined(2).<br>When $V_{CCO}$ transitions from unpowered to powered-up, a channel output assumes the logic state of the input |

(1) $V_{CCI}$ = Input-side $V_{CC}$; $V_{CCO}$ = Output-side $V_{CC}$; PU = Powered up ($V_{CC}$ ≥ 2.25 V); PD = Powered down ($V_{CC}$ ≤ 1.7 V); X = Irrelevant; H = High level; L = Low level
(2) The outputs are in undetermined state when 1.7 V < $V_{CCI}$, $V_{CCO}$ < 2.25 V.
(3) A strongly driven input signal can weakly power the floating $V_{CC}$ via an internal protection diode and cause undetermined output.

### *8.4.1 Device I/O Schematics*

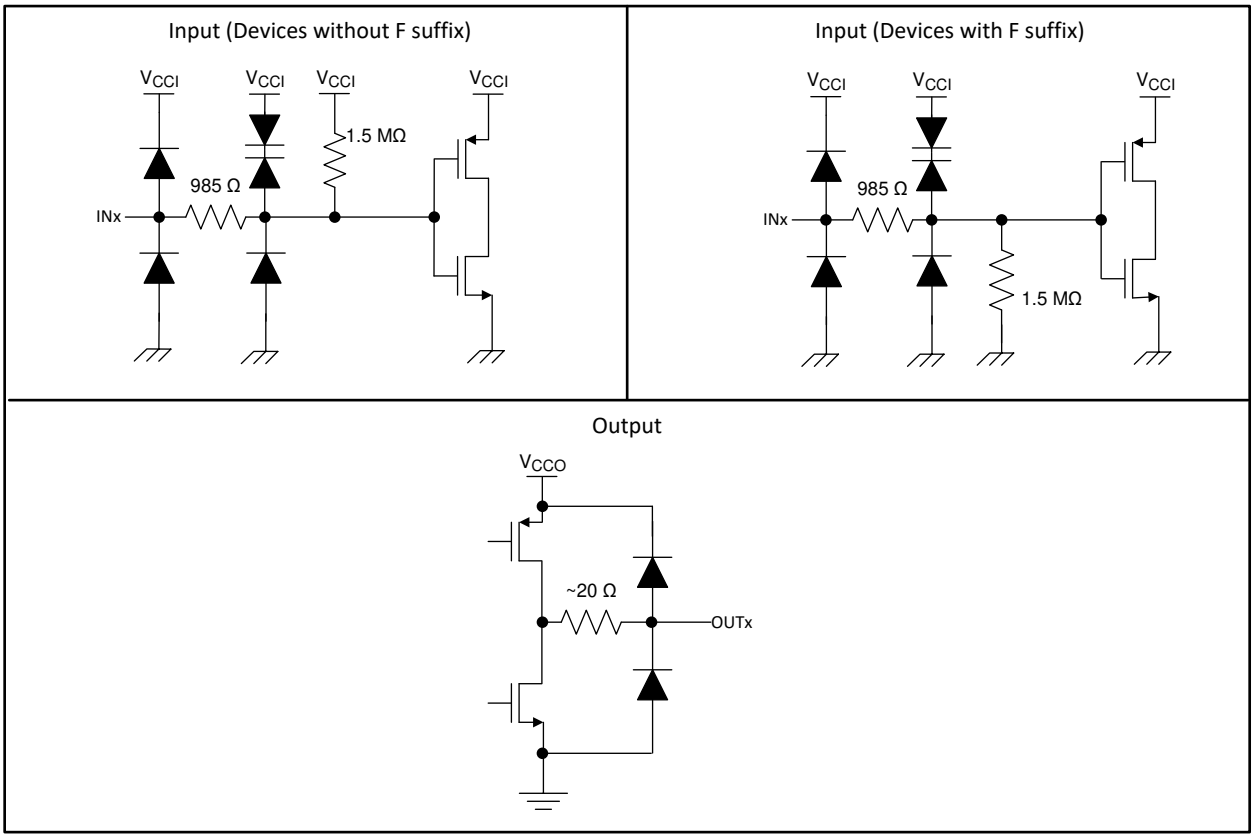


Copyright © 2016, Texas Instruments Incorporated

**Figure 8-3. Device I/O Schematics**


Copyright © 2025 Texas Instruments Incorporated

# 9 Application and Implementation

**Note**

Information in the following applications sections is not part of the TI component specification, and TI does not warrant its accuracy or completeness. TI's customers are responsible for determining suitability of components for their purposes, as well as validating and testing their design implementation to confirm system functionality.

## 9.1 Application Information

The ISO772x-Q1 devices are high-performance, dual-channel digital isolators. The devices use single-ended CMOS-logic switching technology. The supply voltage range is from 2.25 V to 5.5 V for both supplies, $V_{CC1}$ and $V_{CC2}$. When designing with digital isolators, keep in mind that because of the single-ended design structure, digital isolators do not conform to any specific interface standard and are only intended for isolating single-ended CMOS or TTL digital signal lines. The isolator is typically placed between the data controller (that is, µC or UART), and a data converter or a line transceiver, regardless of the interface type or standard.

## 9.2 Typical Application

The ISO7721-Q1 device can be used with Texas Instruments' Piccolo™ microcontroller, CAN transceiver, transformer driver, and voltage regulator to create an isolated CAN interface.

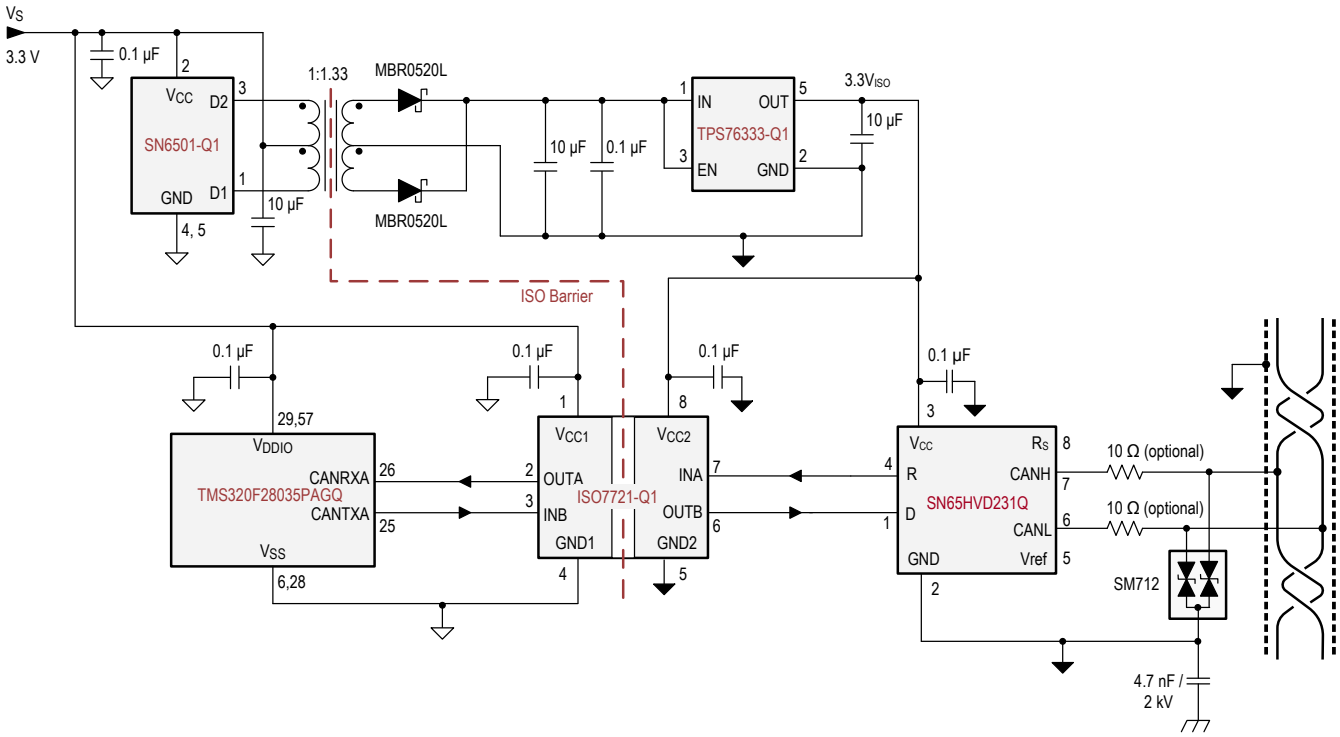


Copyright © 2017, Texas Instruments Incorporated

**Figure 9-1. Isolated 4-mA to 20-mA Current Loop**

### 9.2.1 Design Requirements

To design with these devices, use the parameters listed in Table 9-1.

**Table 9-1. Design Parameters**

| PARAMETER | VALUE |
|---|---|
| Supply voltage, $V_{CC1}$ and $V_{CC2}$ | 2.25 V to 5.5 V |
| Decoupling capacitor between $V_{CC1}$ and GND1 | 0.1 µF |
| Decoupling capacitor from $V_{CC2}$ and GND2 | 0.1 µF |

### 9.2.2 Detailed Design Procedure

Unlike optocouplers, which require external components to improve performance, provide bias, or limit current, the ISO772x-Q1 devices only require two external bypass capacitors to operate.

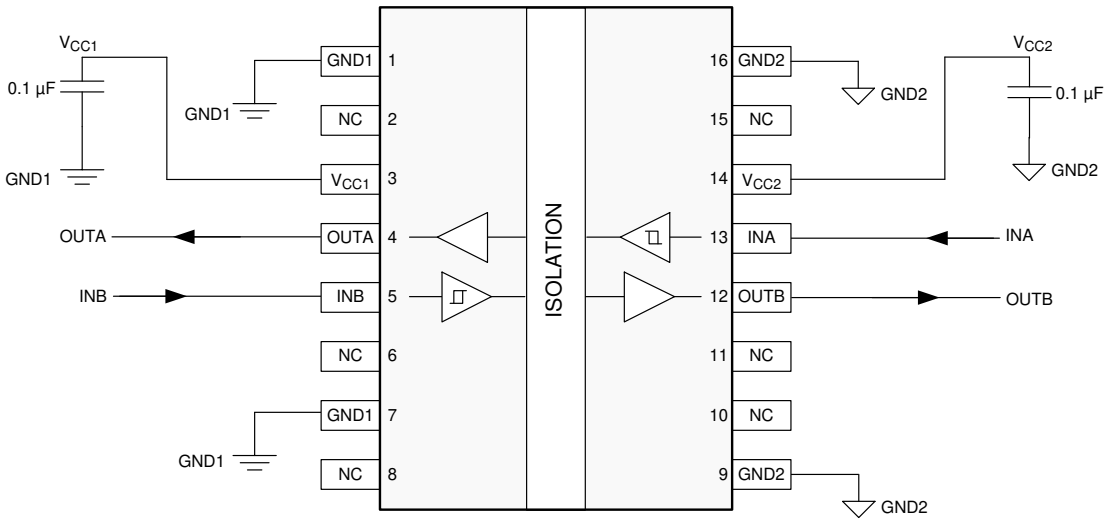


**Figure 9-2. Typical ISO7721-Q1 Circuit Hook-up**


Copyright © 2025 Texas Instruments Incorporated

### 9.2.3 Application Curve

The following typical eye diagrams of the ISO772x-Q1 family of devices indicate low jitter and wide open eye at the maximum data rate of 100 Mbps.

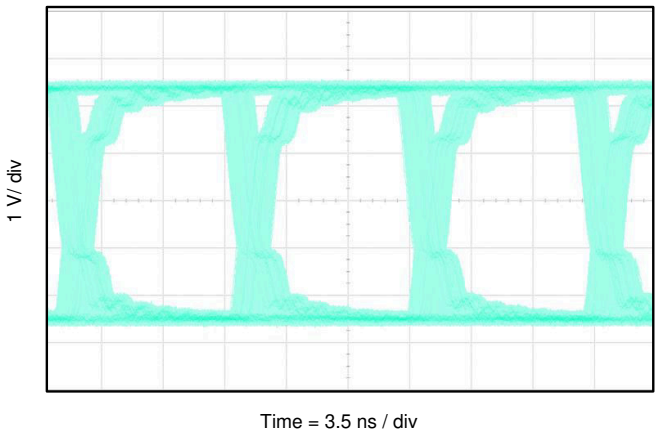


**Figure 9-3. ISO7720-Q1 Eye Diagram at 100 Mbps PRBS, 5-V Supplies and 25°C**

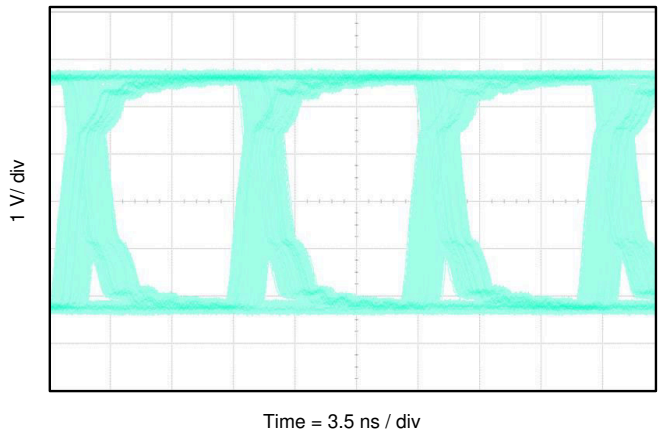


**Figure 9-4. ISO7721-Q1 Eye Diagram at 100 Mbps PRBS, 5-V Supplies and 25°C**

#### 9.2.3.1 *Insulation Lifetime*

Insulation lifetime projection data is collected by using industry-standard Time Dependent Dielectric Breakdown (TDDB) test method. In this test, all pins on each side of the barrier are tied together creating a two-terminal device and high voltage applied between the two sides; See Test Setup for Insulation Lifetime Measurement for TDDB test setup. The insulation breakdown data is collected at various high voltages switching at 60 Hz over temperature. For reinforced insulation, VDE standard requires the use of TDDB projection line with failure rate of less than 1 part per million (ppm). Even though the expected minimum insulation lifetime is 20 years at the specified working isolation voltage, VDE reinforced certification requires additional safety margin of 20% for working voltage and 50% for lifetime which translates into minimum required insulation lifetime of 30 years at a working voltage that's 20% higher than the specified value.

Insulation Lifetime Projection Data shows the intrinsic capability of the isolation barrier to withstand high voltage stress over its lifetime. Based on the TDDB data, the intrinsic capability of the insulation is 1500 $V_{RMS}$ with a lifetime of 36 years. Other factors, such as package size, pollution degree, material group, etc. can further limit the working voltage of the component. The working voltage of DW-16 and DWV-8 packages is specified up to 1500 $V_{RMS}$ and D-8 package up to 450 $V_{RMS}$. At the lower working voltages, the corresponding insulation lifetime is much longer than 36 years.

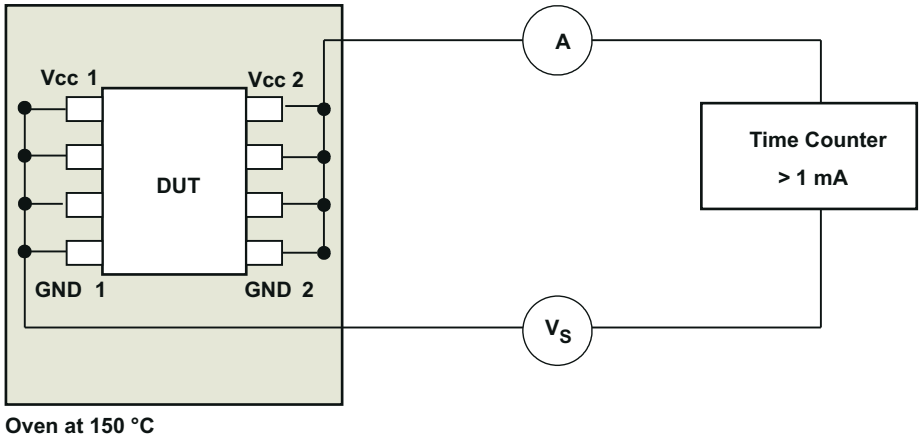


**Figure 9-5. Test Setup for Insulation Lifetime Measurement**

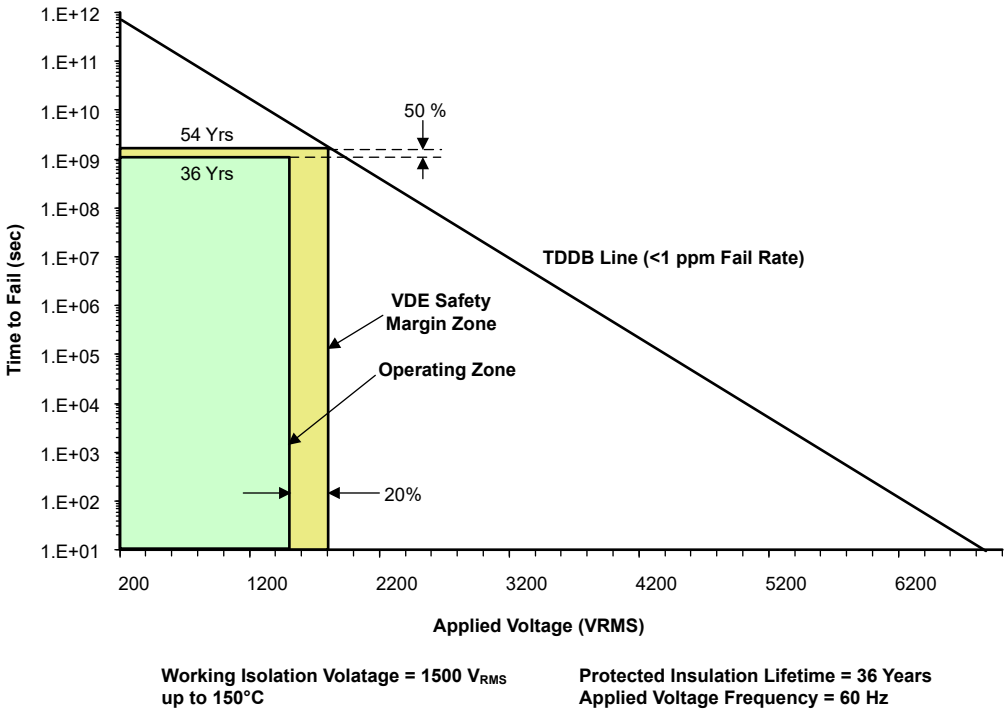


**Figure 9-6. Insulation Lifetime Projection Data**


Copyright © 2025 Texas Instruments Incorporated

## 10 Power Supply Recommendations

To help ensure reliable operation at data rates and supply voltages, a 0.1-µF bypass capacitor is recommended at the input and output supply pins ($V_{CC1}$ and $V_{CC2}$). The capacitors should be placed as close to the supply pins as possible. If only a single primary-side power supply is available in an application, isolated power can be generated for the secondary-side with the help of a transformer driver such as Texas Instruments' SN6501-Q1 . For such applications, detailed power supply design and transformer selection recommendations are available in *SN6501-Q1 Transformer Driver for Isolated Power Supplies* .

Copyright © 2025 Texas Instruments Incorporated

# 11 Layout

## 11.1 Layout Guidelines

A minimum of four layers is required to accomplish a low EMI PCB design (see Figure 11-1). Layer stacking should be in the following order (top-to-bottom): high-speed signal layer, ground plane, power plane and low-frequency signal layer.

- Routing the high-speed traces on the top layer avoids the use of vias (and the introduction of their inductances) and allows for clean interconnects between the isolator and the transmitter and receiver circuits of the data link.
- Placing a solid ground plane next to the high-speed signal layer establishes controlled impedance for transmission line interconnects and provides an excellent low-inductance path for the return current flow.
- Placing the power plane next to the ground plane creates additional high-frequency bypass capacitance of approximately 100 pF/in$^2$.
- Routing the slower speed control signals on the bottom layer allows for greater flexibility as these signal links usually have margin to tolerate discontinuities such as vias.

If an additional supply voltage plane or signal layer is needed, add a second power or ground plane system to the stack to keep it symmetrical. This makes the stack mechanically stable and prevents it from warping. Also the power and ground plane of each power system can be placed closer together, thus increasing the high-frequency bypass capacitance significantly.

For detailed layout recommendations, refer to the *Digital Isolator Design Guide*.

### *11.1.1 PCB Material*

For digital circuit boards operating at less than 150 Mbps, (or rise and fall times greater than 1 ns), and trace lengths of up to 10 inches, use standard FR-4 UL94V-0 printed circuit board. This PCB is preferred over cheaper alternatives because of lower dielectric losses at high frequencies, less moisture absorption, greater strength and stiffness, and the self-extinguishing flammability-characteristics.

## 11.2 Layout Example

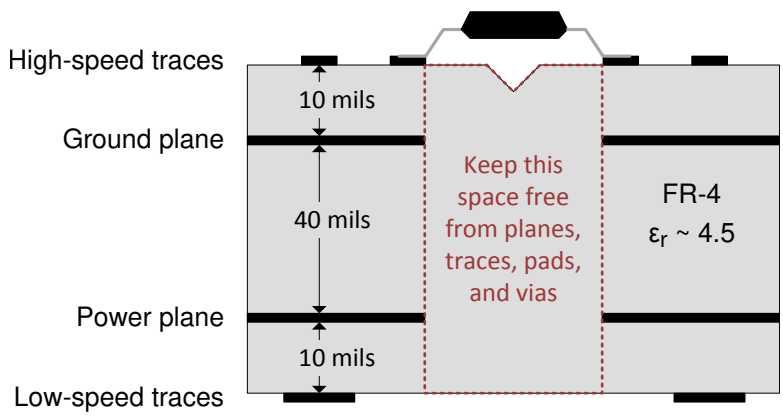


**Figure 11-1. Layout Example**


Copyright © 2025 Texas Instruments Incorporated

# 12 Device and Documentation Support

## 12.1 Device Support

### *12.1.1 Development Support*

For development support, refer to:

- Isolated CAN Flexible Data (FD) Rate Repeater Reference Design
- Isolated 16-Channel AC Analog Input Module Reference Design Using Dual Simultaneously Sampled ADCs
- Polyphase Shunt Metrology with Isolated AFE Reference Design
- Reference Design for Power-Isolated Ultra-Compact Analog Output Module

## 12.2 Documentation Support

### *12.2.1 Related Documentation*

For related documentation, see the following:

- Texas Instruments, *Digital Isolator Design Guide*
- Texas Instruments, *How to use isolation to improve ESD, EFT and Surge immunity in industrial systems* application report
- Texas Instruments, *Isolation Glossary*
- Texas Instruments, *SN6501-Q1 Transformer Driver for Isolated Power Supplies* data sheet
- Texas Instruments, SN65HVD231Q *3.3-V CAN Transceivers* data sheet
- Texas Instruments, *TPS763xx-Q1 Low-Power, 150-mA, Low-Dropout Linear Regulators* data sheet
- Texas Instruments, *TMS320F2803x Piccolo™ Microcontrollers* data sheet

## 12.3 Related Links

The table below lists quick access links. Categories include technical documents, support and community resources, tools and software, and quick access to sample or buy.

**Table 12-1. Related Links**

| PARTS | PRODUCT FOLDER | ORDER NOW | TECHNICAL DOCUMENTS | TOOLS & SOFTWARE | SUPPORT & COMMUNITY |
|---|---|---|---|---|---|
| ISO7720-Q1 | Click here | Click here | Click here | Click here | Click here |
| ISO7721-Q1 | Click here | Click here | Click here | Click here | Click here |

## 12.4 Receiving Notification of Documentation Updates

To receive notification of documentation updates, navigate to the device product folder on ti.com. Click on *Notifications* to register and receive a weekly digest of any product information that has changed. For change details, review the revision history included in any revised document.

## 12.5 Support Resources

TI E2E™ support forums are an engineer's go-to source for fast, verified answers and design help — straight from the experts. Search existing answers or ask your own question to get the quick design help you need.

Linked content is provided "AS IS" by the respective contributors. They do not constitute TI specifications and do not necessarily reflect TI's views; see TI's Terms of Use.

## 12.6 Trademarks

Piccolo™ is a trademark of Texas Instruments.
TI E2E™ is a trademark of Texas Instruments.
All trademarks are the property of their respective owners.

## 12.7 Electrostatic Discharge Caution

This integrated circuit can be damaged by ESD. Texas Instruments recommends that all integrated circuits be handled with appropriate precautions. Failure to observe proper handling and installation procedures can cause damage.

ESD damage can range from subtle performance degradation to complete device failure. Precision integrated circuits may be more susceptible to damage because very small parametric changes could cause the device not to meet its published specifications.

## 12.8 Glossary

TI Glossary This glossary lists and explains terms, acronyms, and definitions.

# 13 Mechanical, Packaging, and Orderable Information

The following pages include mechanical packaging and orderable information. This information is the most current data available for the designated devices. This data is subject to change without notice and revision of this document. For browser-based versions of this data sheet, refer to the left-hand navigation.


Copyright © 2025 Texas Instruments Incorporated

# PACKAGE OUTLINE

## D0008B

## SOIC - 1.75 mm max height

SMALL OUTLINE INTEGRATED CIRCUIT

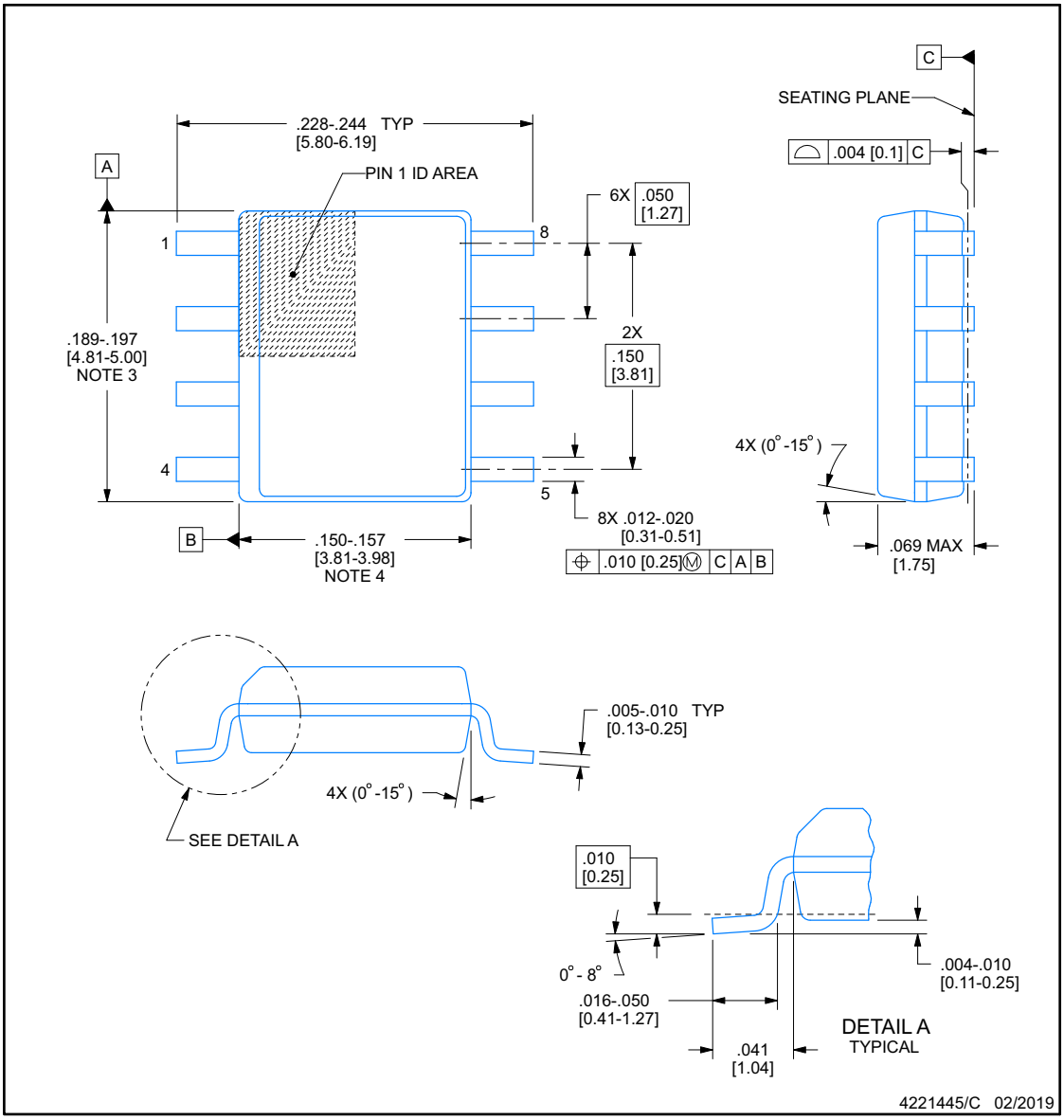


NOTES:

1. Linear dimensions are in inches [millimeters]. Dimensions in parenthesis are for reference only. Controlling dimensions are in inches. Dimensioning and tolerancing per ASME Y14.5M.
2. This drawing is subject to change without notice.
3. This dimension does not include mold flash, protrusions, or gate burrs. Mold flash, protrusions, or gate burrs shall not exceed .006 [0.15], per side.
4. This dimension does not include interlead flash.
5. Reference JEDEC registration MS-012, variation AA.



Copyright © 2025 Texas Instruments Incorporated

# EXAMPLE BOARD LAYOUT

## D0008B

## SOIC - 1.75 mm max height

SMALL OUTLINE INTEGRATED CIRCUIT

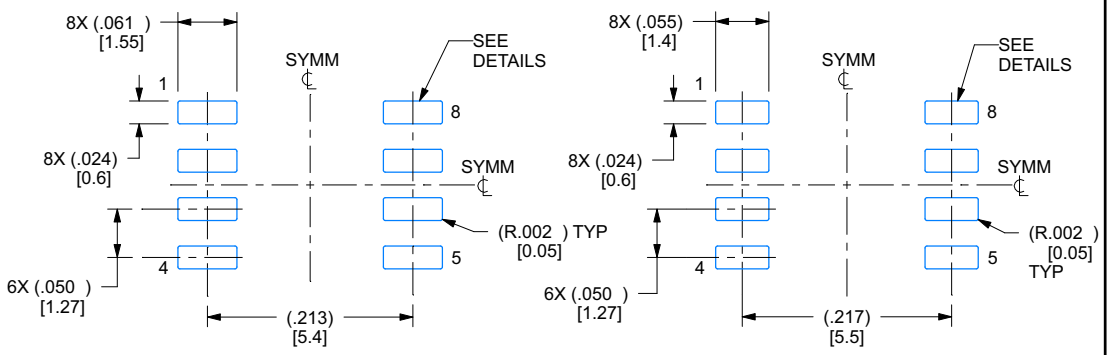


IPC-7351 NOMINAL
.150 [3.85] CLEARANCE / CREEPAGE

HV / ISOLATION OPTION
.162 [4.1] CLEARANCE / CREEPAGE

LAND PATTERN EXAMPLE
EXPOSED METAL SHOWN
SCALE:6X

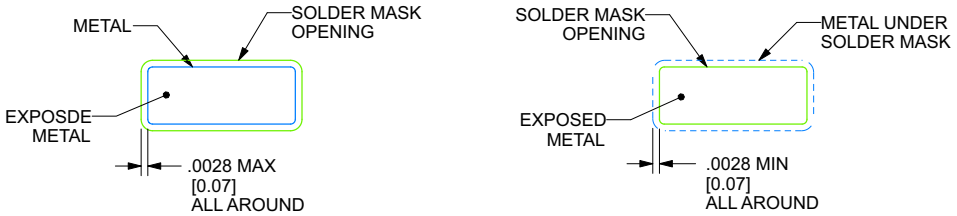


NON SOLDER MASK
DEFINED

SOLDER MASK
DEFINED

SOLDER MASK DETAILS

4221445/C 02/2019

NOTES: (continued)

6. Publication IPC-7351 may have alternate designs.
7. Solder mask tolerances between and around signal pads can vary based on board fabrication site.


Copyright © 2025 Texas Instruments Incorporated

# EXAMPLE STENCIL DESIGN

## D0008B

## SOIC - 1.75 mm max height

SMALL OUTLINE INTEGRATED CIRCUIT

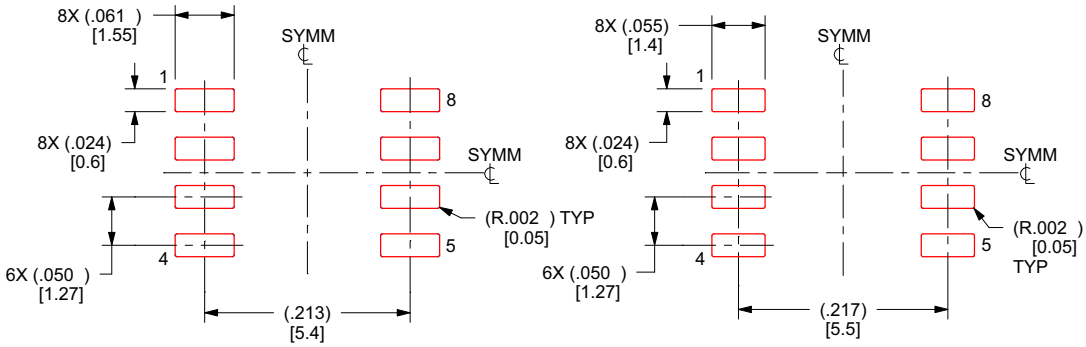


IPC-7351 NOMINAL
.150 [3.85] CLEARANCE / CREEPAGE

HV / ISOLATION OPTION
.162 [4.1] CLEARANCE / CREEPAGE

SOLDER PASTE EXAMPLE
BASED ON .005 INCH [0.127 MM] THICK STENCIL
SCALE:6X

4221445/C 02/2019

NOTES: (continued)

8. Laser cutting apertures with trapezoidal walls and rounded corners may offer better paste release. IPC-7525 may have alternate design recommendations.
9. Board assembly site may have different recommendations for stencil design.



Copyright © 2025 Texas Instruments Incorporated

## PACKAGING INFORMATION

| Orderable part number | Status (1) | Material type (2) | Package \| Pins | Package qty \| Carrier | RoHS (3) | Lead finish/ Ball material (4) | MSL rating/ Peak reflow (5) | Op temp (°C) | Part marking (6) |
|---|---|---|---|---|---|---|---|---|---|
| ISO7720FQDRQ1 | Active | Production | SOIC (D) \| 8 | 2500 \| LARGE T&R | Yes | NIPDAU | Level-2-260C-1 YEAR | -40 to 125 | (7720F, 7720FQ) |
| ISO7720FQDRQ1.A | Active | Production | SOIC (D) \| 8 | 2500 \| LARGE T&R | Yes | NIPDAU | Level-2-260C-1 YEAR | -40 to 125 | (7720F, 7720FQ) |
| ISO7720FQDWRQ1 | Active | Production | SOIC (DW) \| 16 | 2000 \| LARGE T&R | Yes | NIPDAU | Level-2-260C-1 YEAR | -40 to 125 | (ISO7720F, ISO7720 FQ) |
| ISO7720FQDWRQ1.A | Active | Production | SOIC (DW) \| 16 | 2000 \| LARGE T&R | Yes | NIPDAU | Level-2-260C-1 YEAR | -40 to 125 | (ISO7720F, ISO7720 FQ) |
| ISO7720FQDWVRQ1 | Active | Production | SOIC (DWV) \| 8 | 1000 \| LARGE T&R | Yes | NIPDAU | Level-2-260C-1 YEAR | -40 to 125 | 7720F |
| ISO7720FQDWVRQ1.A | Active | Production | SOIC (DWV) \| 8 | 1000 \| LARGE T&R | Yes | NIPDAU | Level-2-260C-1 YEAR | -40 to 125 | 7720F |
| ISO7720QDRQ1 | Active | Production | SOIC (D) \| 8 | 2500 \| LARGE T&R | Yes | NIPDAU | Level-2-260C-1 YEAR | -40 to 125 | (7720, 7720Q) |
| ISO7720QDRQ1.A | Active | Production | SOIC (D) \| 8 | 2500 \| LARGE T&R | Yes | NIPDAU | Level-2-260C-1 YEAR | -40 to 125 | (7720, 7720Q) |
| ISO7720QDWRQ1 | Active | Production | SOIC (DW) \| 16 | 2000 \| LARGE T&R | Yes | NIPDAU | Level-2-260C-1 YEAR | -40 to 125 | (ISO7720, ISO7720Q ) |
| ISO7720QDWRQ1.A | Active | Production | SOIC (DW) \| 16 | 2000 \| LARGE T&R | Yes | NIPDAU | Level-2-260C-1 YEAR | -40 to 125 | (ISO7720, ISO7720Q ) |
| ISO7720QDWVRQ1 | Active | Production | SOIC (DWV) \| 8 | 1000 \| LARGE T&R | Yes | NIPDAU | Level-2-260C-1 YEAR | -40 to 125 | 7720 |
| ISO7720QDWVRQ1.A | Active | Production | SOIC (DWV) \| 8 | 1000 \| LARGE T&R | Yes | NIPDAU | Level-2-260C-1 YEAR | -40 to 125 | 7720 |
| ISO7721FQDRQ1 | Active | Production | SOIC (D) \| 8 | 2500 \| LARGE T&R | Yes | NIPDAU | Level-2-260C-1 YEAR | -40 to 125 | (7721F, 7721FQ) |
| ISO7721FQDRQ1.A | Active | Production | SOIC (D) \| 8 | 2500 \| LARGE T&R | Yes | NIPDAU | Level-2-260C-1 YEAR | -40 to 125 | (7721F, 7721FQ) |
| ISO7721FQDWRQ1 | Active | Production | SOIC (DW) \| 16 | 2000 \| LARGE T&R | Yes | NIPDAU | Level-2-260C-1 YEAR | -40 to 125 | (ISO7721F, ISO7721 FQ) |
| ISO7721FQDWRQ1.A | Active | Production | SOIC (DW) \| 16 | 2000 \| LARGE T&R | Yes | NIPDAU | Level-2-260C-1 YEAR | -40 to 125 | (ISO7721F, ISO7721 FQ) |
| ISO7721FQDWVRQ1 | Active | Production | SOIC (DWV) \| 8 | 1000 \| LARGE T&R | Yes | NIPDAU | Level-2-260C-1 YEAR | -40 to 125 | 7721F |
| ISO7721FQDWVRQ1.A | Active | Production | SOIC (DWV) \| 8 | 1000 \| LARGE T&R | Yes | NIPDAU | Level-2-260C-1 YEAR | -40 to 125 | 7721F |
| ISO7721QDRQ1 | Active | Production | SOIC (D) \| 8 | 2500 \| LARGE T&R | Yes | NIPDAU | Level-2-260C-1 YEAR | -40 to 125 | (7721, 7721Q) |
| ISO7721QDRQ1.A | Active | Production | SOIC (D) \| 8 | 2500 \| LARGE T&R | Yes | NIPDAU | Level-2-260C-1 YEAR | -40 to 125 | (7721, 7721Q) |
| ISO7721QDWRQ1 | Active | Production | SOIC (DW) \| 16 | 2000 \| LARGE T&R | Yes | NIPDAU | Level-2-260C-1 YEAR | -40 to 125 | (ISO7721, ISO7721Q ) |
| ISO7721QDWRQ1.A | Active | Production | SOIC (DW) \| 16 | 2000 \| LARGE T&R | Yes | NIPDAU | Level-2-260C-1 YEAR | -40 to 125 | (ISO7721, ISO7721Q ) |
| ISO7721QDWVRQ1 | Active | Production | SOIC (DWV) \| 8 | 1000 \| LARGE T&R | Yes | NIPDAU | Level-2-260C-1 YEAR | -40 to 125 | 7721 |

| Orderable part number | Status (1) | Material type (2) | Package \| Pins | Package qty \| Carrier | RoHS (3) | Lead finish/ Ball material (4) | MSL rating/ Peak reflow (5) | Op temp (°C) | Part marking (6) |
|---|---|---|---|---|---|---|---|---|---|
| ISO7721QDWVRQ1.A | Active | Production | SOIC (DWV) \| 8 | 1000 \| LARGE T&R | Yes | NIPDAU | Level-2-260C-1 YEAR | -40 to 125 | 7721 |

(1) **Status:** For more details on status, see our product life cycle.

(2) **Material type:** When designated, preproduction parts are prototypes/experimental devices, and are not yet approved or released for full production. Testing and final process, including without limitation quality assurance, reliability performance testing, and/or process qualification, may not yet be complete, and this item is subject to further changes or possible discontinuation. If available for ordering, purchases will be subject to an additional waiver at checkout, and are intended for early internal evaluation purposes only. These items are sold without warranties of any kind.

(3) **RoHS values:** Yes, No, RoHS Exempt. See the TI RoHS Statement for additional information and value definition.

(4) **Lead finish/Ball material:** Parts may have multiple material finish options. Finish options are separated by a vertical ruled line. Lead finish/Ball material values may wrap to two lines if the finish value exceeds the maximum column width.

(5) **MSL rating/Peak reflow:** The moisture sensitivity level ratings and peak solder (reflow) temperatures. In the event that a part has multiple moisture sensitivity ratings, only the lowest level per JEDEC standards is shown. Refer to the shipping label for the actual reflow temperature that will be used to mount the part to the printed circuit board.

(6) **Part marking:** There may be an additional marking, which relates to the logo, the lot trace code information, or the environmental category of the part.

Multiple part markings will be inside parentheses. Only one part marking contained in parentheses and separated by a "~" will appear on a part. If a line is indented then it is a continuation of the previous line and the two combined represent the entire part marking for that device.

**Important Information and Disclaimer:**The information provided on this page represents TI's knowledge and belief as of the date that it is provided. TI bases its knowledge and belief on information provided by third parties, and makes no representation or warranty as to the accuracy of such information. Efforts are underway to better integrate information from third parties. TI has taken and continues to take reasonable steps to provide representative and accurate information but may not have conducted destructive testing or chemical analysis on incoming materials and chemicals. TI and TI suppliers consider certain information to be proprietary, and thus CAS numbers and other limited information may not be available for release.

In no event shall TI's liability arising out of such information exceed the total purchase price of the TI part(s) at issue in this document sold by TI to Customer on an annual basis.

**OTHER QUALIFIED VERSIONS OF ISO7720-Q1, ISO7721-Q1 :**

- Catalog : ISO7720, ISO7721

NOTE: Qualified Version Definitions:

- Catalog - TI's standard catalog product

## TAPE AND REEL INFORMATION

**REEL DIMENSIONS**

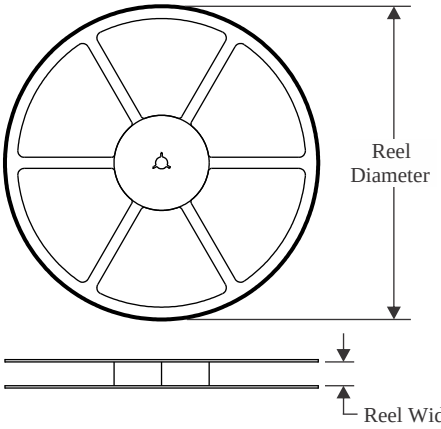


**TAPE DIMENSIONS**

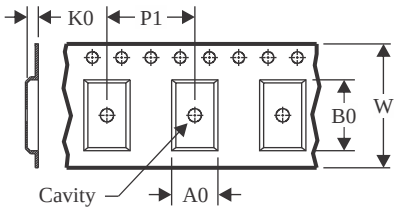


| | |
|---|---|
| A0 | Dimension designed to accommodate the component width |
| B0 | Dimension designed to accommodate the component length |
| K0 | Dimension designed to accommodate the component thickness |
| W | Overall width of the carrier tape |
| P1 | Pitch between successive cavity centers |

**QUADRANT ASSIGNMENTS FOR PIN 1 ORIENTATION IN TAPE**

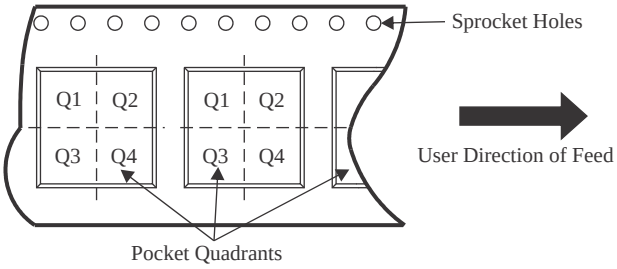


*All dimensions are nominal

| Device | Package Type | Package Drawing | Pins | SPQ | Reel Diameter (mm) | Reel Width W1 (mm) | A0 (mm) | B0 (mm) | K0 (mm) | P1 (mm) | W (mm) | Pin1 Quadrant |
|---|---|---|---|---|---|---|---|---|---|---|---|---|
| ISO7720FQDRQ1 | SOIC | D | 8 | 2500 | 330.0 | 12.4 | 6.4 | 5.2 | 2.1 | 8.0 | 12.0 | Q1 |
| ISO7720FQDWRQ1 | SOIC | DW | 16 | 2000 | 330.0 | 16.4 | 10.75 | 10.7 | 2.7 | 12.0 | 16.0 | Q1 |
| ISO7720FQDWRQ1 | SOIC | DW | 16 | 2000 | 330.0 | 16.4 | 10.75 | 10.7 | 2.7 | 12.0 | 16.0 | Q1 |
| ISO7720FQDWVRQ1 | SOIC | DWV | 8 | 1000 | 330.0 | 16.4 | 12.15 | 6.2 | 3.05 | 16.0 | 16.0 | Q1 |
| ISO7720QDRQ1 | SOIC | D | 8 | 2500 | 330.0 | 12.4 | 6.4 | 5.2 | 2.1 | 8.0 | 12.0 | Q1 |
| ISO7720QDWRQ1 | SOIC | DW | 16 | 2000 | 330.0 | 16.4 | 10.75 | 10.7 | 2.7 | 12.0 | 16.0 | Q1 |
| ISO7720QDWRQ1 | SOIC | DW | 16 | 2000 | 330.0 | 16.4 | 10.75 | 10.7 | 2.7 | 12.0 | 16.0 | Q1 |
| ISO7720QDWVRQ1 | SOIC | DWV | 8 | 1000 | 330.0 | 16.4 | 12.15 | 6.2 | 3.05 | 16.0 | 16.0 | Q1 |
| ISO7721FQDRQ1 | SOIC | D | 8 | 2500 | 330.0 | 12.4 | 6.4 | 5.2 | 2.1 | 8.0 | 12.0 | Q1 |
| ISO7721FQDWRQ1 | SOIC | DW | 16 | 2000 | 330.0 | 16.4 | 10.75 | 10.7 | 2.7 | 12.0 | 16.0 | Q1 |
| ISO7721FQDWRQ1 | SOIC | DW | 16 | 2000 | 330.0 | 16.4 | 10.75 | 10.7 | 2.7 | 12.0 | 16.0 | Q1 |
| ISO7721FQDWVRQ1 | SOIC | DWV | 8 | 1000 | 330.0 | 16.4 | 12.15 | 6.2 | 3.05 | 16.0 | 16.0 | Q1 |
| ISO7721QDRQ1 | SOIC | D | 8 | 2500 | 330.0 | 12.4 | 6.4 | 5.2 | 2.1 | 8.0 | 12.0 | Q1 |
| ISO7721QDWRQ1 | SOIC | DW | 16 | 2000 | 330.0 | 16.4 | 10.75 | 10.7 | 2.7 | 12.0 | 16.0 | Q1 |
| ISO7721QDWRQ1 | SOIC | DW | 16 | 2000 | 330.0 | 16.4 | 10.75 | 10.7 | 2.7 | 12.0 | 16.0 | Q1 |
| ISO7721QDWRQ1 | SOIC | DW | 16 | 2000 | 330.0 | 16.4 | 10.75 | 10.7 | 2.7 | 12.0 | 16.0 | Q1 |

| Device | Package Type | Package Drawing | Pins | SPQ | Reel Diameter (mm) | Reel Width W1 (mm) | A0 (mm) | B0 (mm) | K0 (mm) | P1 (mm) | W (mm) | Pin1 Quadrant |
|---|---|---|---|---|---|---|---|---|---|---|---|---|
| ISO7721QDWVRQ1 | SOIC | DWV | 8 | 1000 | 330.0 | 16.4 | 12.15 | 6.2 | 3.05 | 16.0 | 16.0 | Q1 |

TAPE AND REEL BOX DIMENSIONS

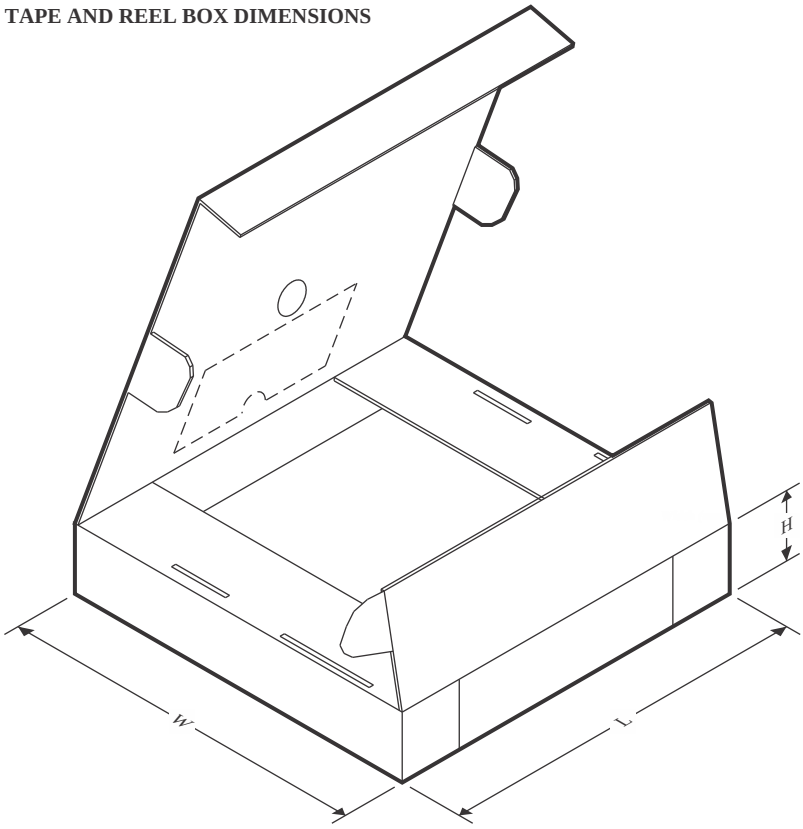


*All dimensions are nominal

| Device | Package Type | Package Drawing | Pins | SPQ | Length (mm) | Width (mm) | Height (mm) |
|---|---|---|---|---|---|---|---|
| ISO7720FQDRQ1 | SOIC | D | 8 | 2500 | 353.0 | 353.0 | 32.0 |
| ISO7720FQDWRQ1 | SOIC | DW | 16 | 2000 | 353.0 | 353.0 | 32.0 |
| ISO7720FQDWRQ1 | SOIC | DW | 16 | 2000 | 356.0 | 356.0 | 36.0 |
| ISO7720FQDWVRQ1 | SOIC | DWV | 8 | 1000 | 353.0 | 353.0 | 32.0 |
| ISO7720QDRQ1 | SOIC | D | 8 | 2500 | 353.0 | 353.0 | 32.0 |
| ISO7720QDWRQ1 | SOIC | DW | 16 | 2000 | 353.0 | 353.0 | 32.0 |
| ISO7720QDWRQ1 | SOIC | DW | 16 | 2000 | 356.0 | 356.0 | 36.0 |
| ISO7720QDWVRQ1 | SOIC | DWV | 8 | 1000 | 353.0 | 353.0 | 32.0 |
| ISO7721FQDRQ1 | SOIC | D | 8 | 2500 | 353.0 | 353.0 | 32.0 |
| ISO7721FQDWRQ1 | SOIC | DW | 16 | 2000 | 353.0 | 353.0 | 32.0 |
| ISO7721FQDWRQ1 | SOIC | DW | 16 | 2000 | 356.0 | 356.0 | 36.0 |
| ISO7721FQDWVRQ1 | SOIC | DWV | 8 | 1000 | 353.0 | 353.0 | 32.0 |
| ISO7721QDRQ1 | SOIC | D | 8 | 2500 | 353.0 | 353.0 | 32.0 |
| ISO7721QDWRQ1 | SOIC | DW | 16 | 2000 | 353.0 | 353.0 | 32.0 |
| ISO7721QDWRQ1 | SOIC | DW | 16 | 2000 | 350.0 | 350.0 | 43.0 |
| ISO7721QDWRQ1 | SOIC | DW | 16 | 2000 | 356.0 | 356.0 | 36.0 |
| ISO7721QDWVRQ1 | SOIC | DWV | 8 | 1000 | 353.0 | 353.0 | 32.0 |

# GENERIC PACKAGE VIEW

## DW 16

## SOIC - 2.65 mm max height

**7.5 x 10.3, 1.27 mm pitch**

SMALL OUTLINE INTEGRATED CIRCUIT

This image is a representation of the package family, actual package may vary.
Refer to the product data sheet for package details.

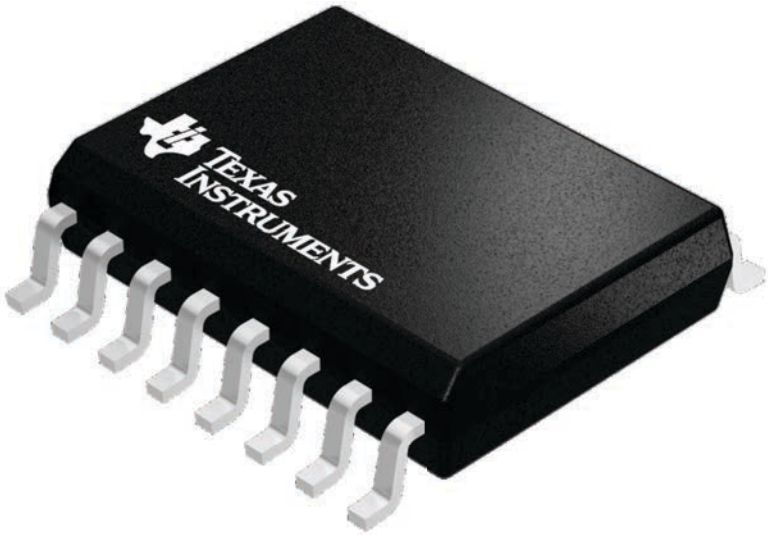


4224780/A

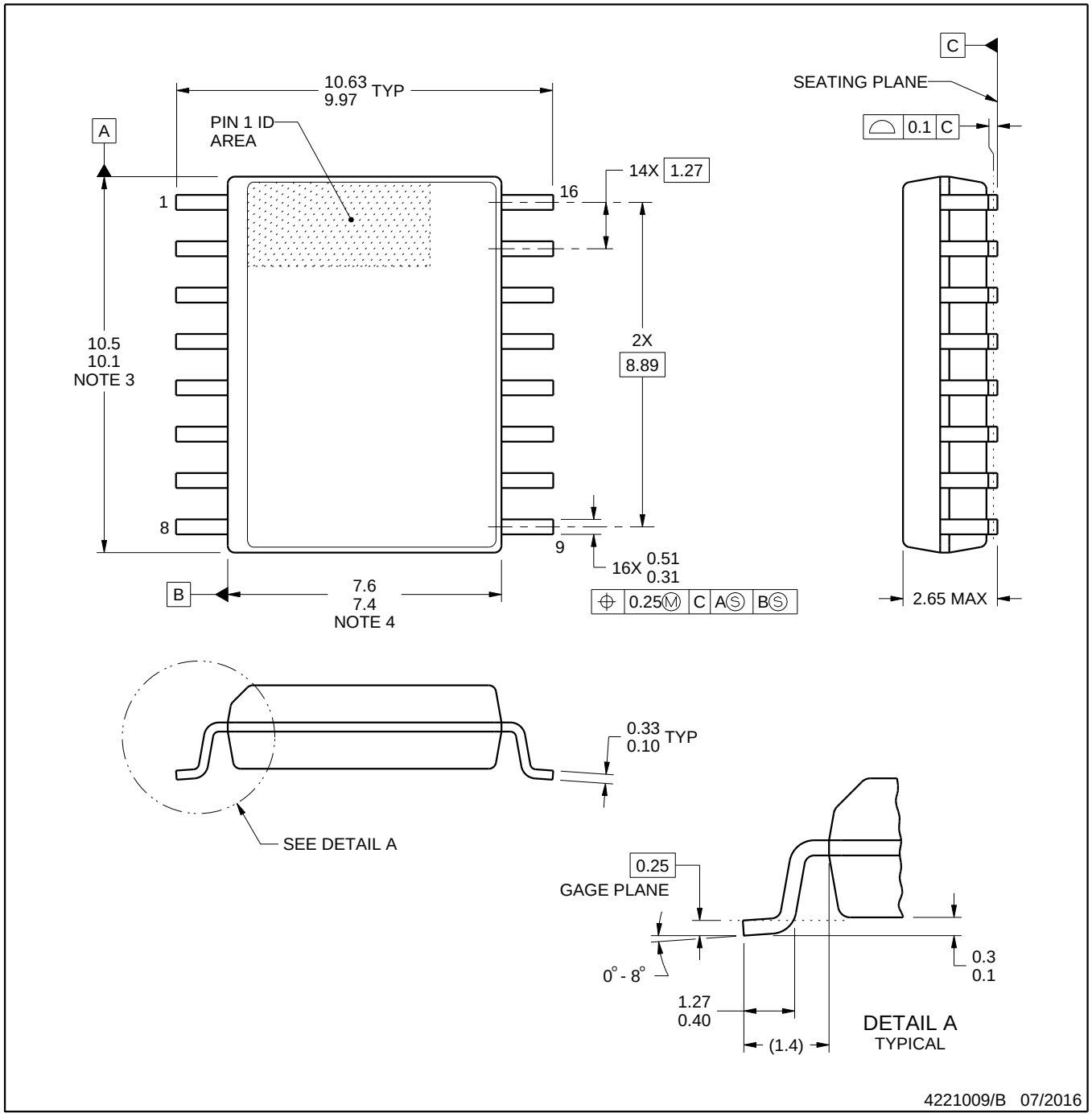


NOTES:

1. All linear dimensions are in millimeters. Dimensions in parenthesis are for reference only. Dimensioning and tolerancing per ASME Y14.5M.
2. This drawing is subject to change without notice.
3. This dimension does not include mold flash, protrusions, or gate burrs. Mold flash, protrusions, or gate burrs shall not exceed 0.15 mm, per side.
4. This dimension does not include interlead flash. Interlead flash shall not exceed 0.25 mm, per side.
5. Reference JEDEC registration MS-013.

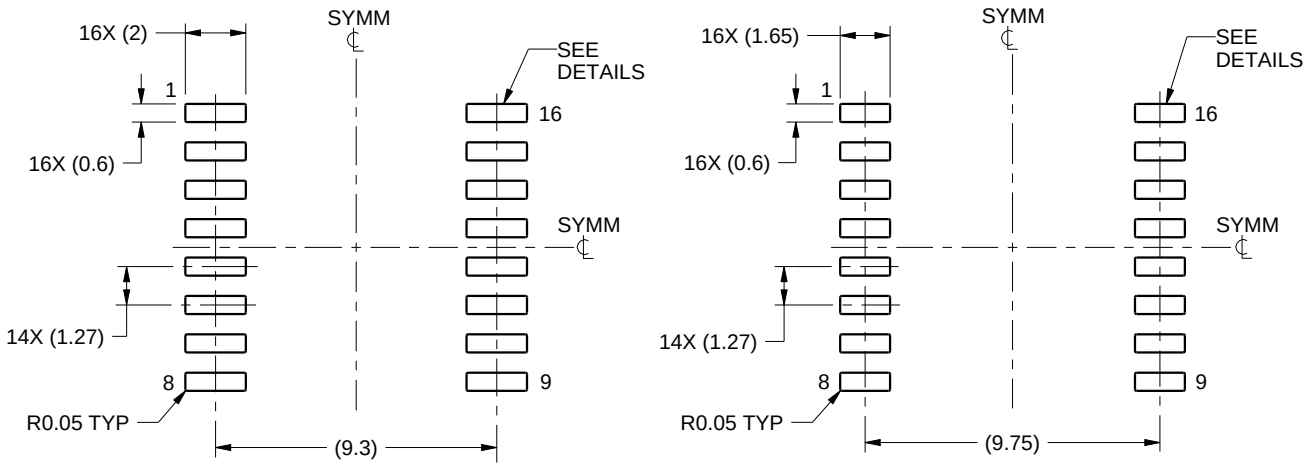


IPC-7351 NOMINAL
7.3 mm CLEARANCE/CREEPAGE

HV / ISOLATION OPTION
8.1 mm CLEARANCE/CREEPAGE

LAND PATTERN EXAMPLE
SCALE:4X

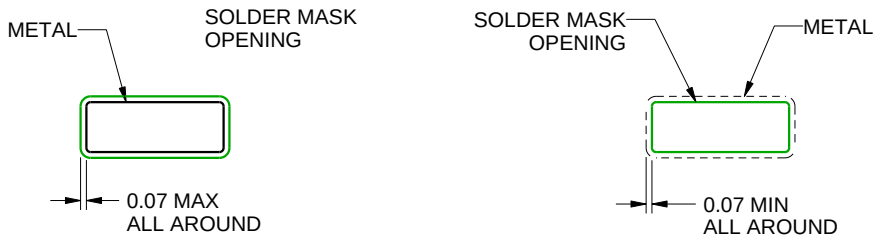


NON SOLDER MASK DEFINED

SOLDER MASK DEFINED

SOLDER MASK DETAILS

4221009/B 07/2016

NOTES: (continued)

6. Publication IPC-7351 may have alternate designs.
7. Solder mask tolerances between and around signal pads can vary based on board fabrication site.

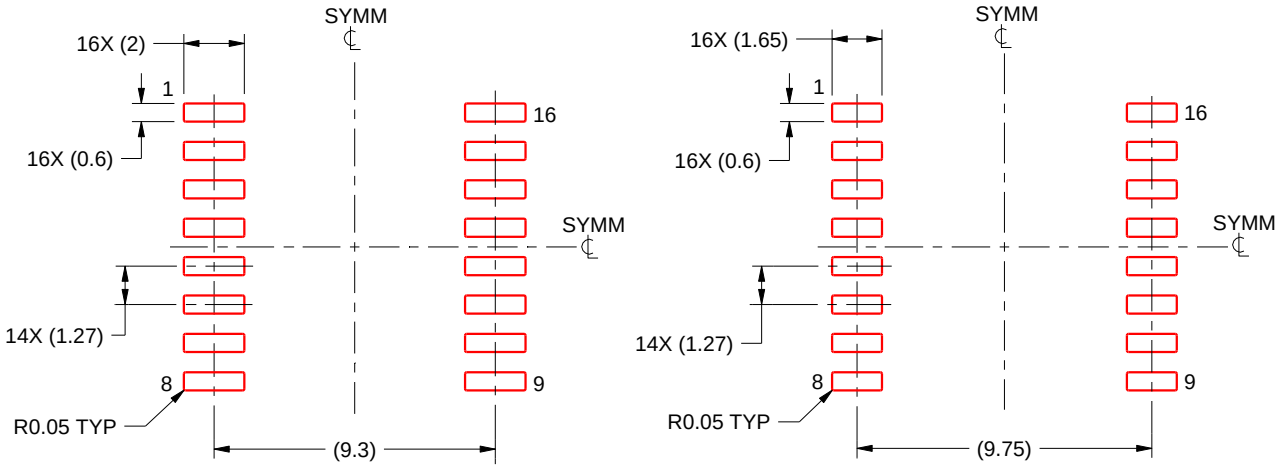


IPC-7351 NOMINAL
7.3 mm CLEARANCE/CREEPAGE

HV / ISOLATION OPTION
8.1 mm CLEARANCE/CREEPAGE

SOLDER PASTE EXAMPLE
BASED ON 0.125 mm THICK STENCIL
SCALE:4X

4221009/B 07/2016

NOTES: (continued)

8. Laser cutting apertures with trapezoidal walls and rounded corners may offer better paste release. IPC-7525 may have alternate design recommendations.
9. Board assembly site may have different recommendations for stencil design.

# IMPORTANT NOTICE AND DISCLAIMER

TI PROVIDES TECHNICAL AND RELIABILITY DATA (INCLUDING DATASHEETS), DESIGN RESOURCES (INCLUDING REFERENCE DESIGNS), APPLICATION OR OTHER DESIGN ADVICE, WEB TOOLS, SAFETY INFORMATION, AND OTHER RESOURCES “AS IS” AND WITH ALL FAULTS, AND DISCLAIMS ALL WARRANTIES, EXPRESS AND IMPLIED, INCLUDING WITHOUT LIMITATION ANY IMPLIED WARRANTIES OF MERCHANTABILITY, FITNESS FOR A PARTICULAR PURPOSE OR NON-INFRINGEMENT OF THIRD PARTY INTELLECTUAL PROPERTY RIGHTS.

These resources are intended for skilled developers designing with TI products. You are solely responsible for (1) selecting the appropriate TI products for your application, (2) designing, validating and testing your application, and (3) ensuring your application meets applicable standards, and any other safety, security, regulatory or other requirements.

These resources are subject to change without notice. TI grants you permission to use these resources only for development of an application that uses the TI products described in the resource. Other reproduction and display of these resources is prohibited. No license is granted to any other TI intellectual property right or to any third party intellectual property right. TI disclaims responsibility for, and you fully indemnify TI and its representatives against any claims, damages, costs, losses, and liabilities arising out of your use of these resources.

TI’s products are provided subject to TI’s Terms of Sale, TI’s General Quality Guidelines, or other applicable terms available either on ti.com or provided in conjunction with such TI products. TI’s provision of these resources does not expand or otherwise alter TI’s applicable warranties or warranty disclaimers for TI products. Unless TI explicitly designates a product as custom or customer-specified, TI products are standard, catalog, general purpose devices.

TI objects to and rejects any additional or different terms you may propose.

Copyright © 2026, Texas Instruments Incorporated

Last updated 10/2025