Littelfuse
Expertise Applied | Answers Delivered

# Schottky Barrier Rectifier
# MBR20150CT 2x 10A, 150V, TO-220AB Common Cathode

## MBR20150CT

RoHS

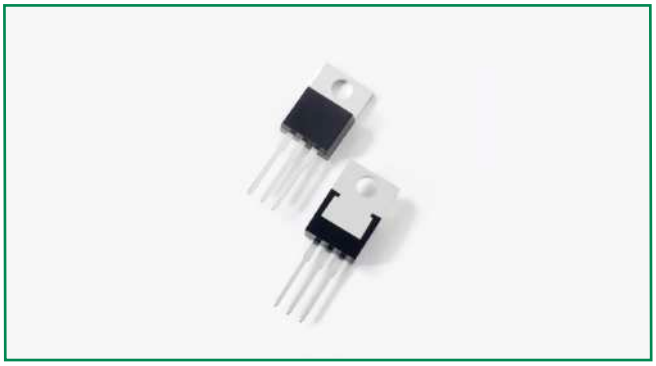

## Description

Littelfuse MBR series Schottky Barrier Rectifier is designed to meet the general requirements of commercial applications by providing high temperature, low leakage and low $V_F$ products.
It is suitable for high frequency switching mode power supply, free-wheeling diodes and polarity protection diodes.

## Features

- High junction temperature capability
- Guard ring for enhanced ruggedness and long term reliability
- Low forward voltage drop
- High frequency operation
- Common cathode configuration in TO-220AB package

## Applications

- Switching mode power supply
- Free-wheeling diodes
- DC/DC converters
- Polarity protection diodes

## Pin out

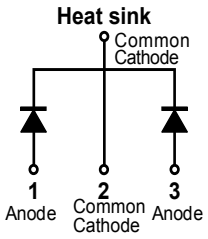


## Maximum Ratings

| Parameters | Symbol | Test Conditions | Max | Unit |
|---|---|---|---|---|
| Peak Inverse Voltage | $V_{RWM}$ | - | 150 | V |
| Maximum RMS Voltage | $V_{RMS}$ | - | 105 | V |
| Average Forward Current | $I_{F(AV)}$ | 50% duty cycle @$T_C$ = 125°C, rectangular wave form | 10(Per leg) | A |
| | | | 20(Per device) | |
| Peak Repetitive Surge current (Rated $V_R$ , Square Wave,20KHz) | $I_{RRM}$ | - | 1.0 | A |
| Peak One Cycle Non-Repetitive Surge Current (per leg) | $I_{FSM}$ | 8.3 ms, half Sine pulse | 150 | A |

## Electrical Characteristics

| Parameters | Symbol | Test Conditions | Max | Unit |
|---|---|---|---|---|
| Forward Voltage Drop (per leg) * | $V_{F1}$ | @10A, Pulse, $T_J$ = 25 °C | 0.90 | V |
| | $V_{F2}$ | @10A, Pulse, $T_J$ = 125 °C | 0.83 | |
| Reverse Current (per leg) * | $I_{R1}$ | @$V_R$ = rated $V_R$ $T_J$ = 25 °C | 0.50 Max | mA |
| | | | 0.01 Typ | |
| | $I_{R2}$ | @$V_R$ = rated $V_R$ $T_J$ = 125 °C | 5.0 | |
| Junction Capacitance (per leg) | $C_T$ | @$V_R$ = 5V, $T_C$ = 25 °C $f_{SIG}$ = 1MHz | 400 | pF |
| Series Inductance (per leg) | $L_S$ | Measured lead to lead 5 mm from package body | 8.0 | nH |
| Voltage Rate of Change | dv/dt | | 10,000 | V/µs |

* Pulse Width < 300µs, Duty Cycle <2%

©2015 Littelfuse, Inc
Specifications are subject to change without notice.
Revised:01/19/16

# Schottky Barrier Rectifier
# MBR20150CT 2x 10A, 150V, TO-220AB Common Cathode

## Thermal-Mechanical Specifications

| Parameters | Symbol | Test Conditions | Max | Unit |
|---|---|---|---|---|
| Junction Temperature | $T_J$ | | -55 to +175 | °C |
| Storage Temperature | $T_{stg}$ | | -55 to +150 | °C |
| Maximum Thermal Resistance Junction to Case(per leg) | $R_{thJC}$ | DC operation | 1.5 | °C/W |
| Maximum Thermal Resistance, Case to Heat Sink | $R_{thCS}$ | Mounting surface, smooth and greased(only for TO-220) | 0.5 | °C/W |
| Approximate Weight | wt | | 2 | g |
| Case Style | TO-220AB | | | |

## Figure 1: Typical Forward Characteristics

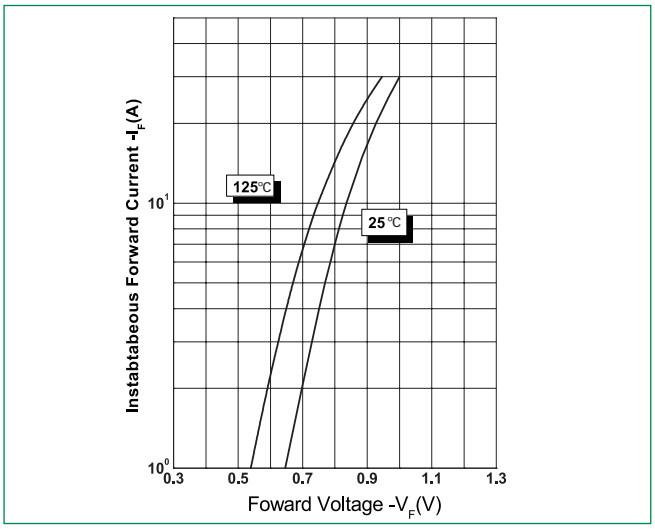


## Figure 2: Typical Reverse Characteristics

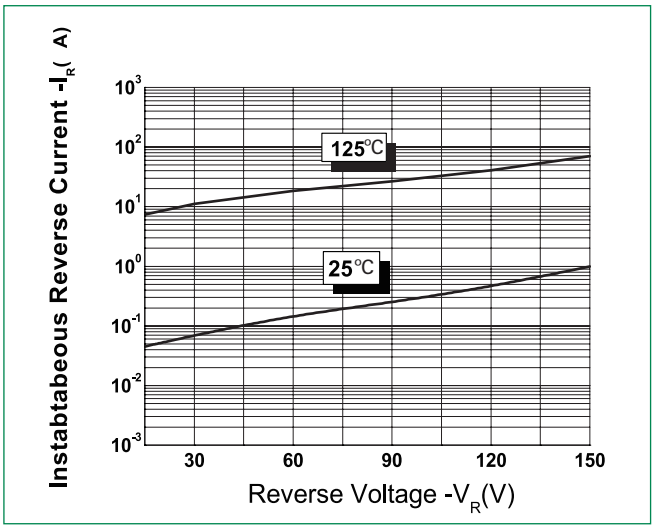


## Figure 3: Typical Junction Capacitance

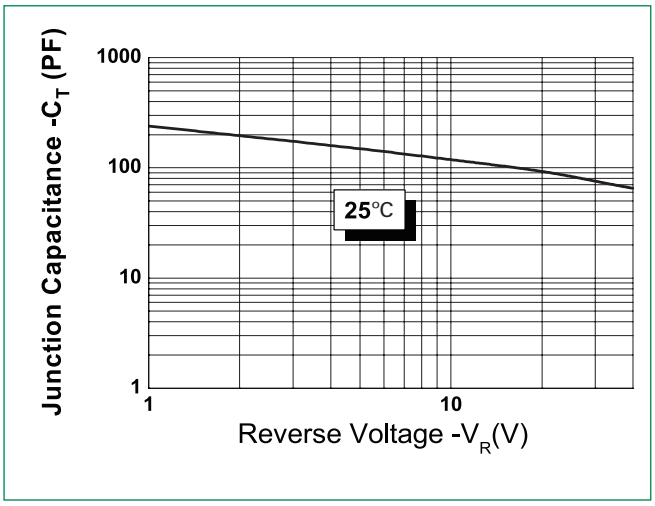


©2015 Littelfuse, Inc
Specifications are subject to change without notice.
Revised:01/19/16

Littelfuse
Expertise Applied | Answers Delivered

# Schottky Barrier Rectifier
# MBR20150CT 2x 10A, 150V, TO-220AB Common Cathode

## Dimensions- TO-220AB

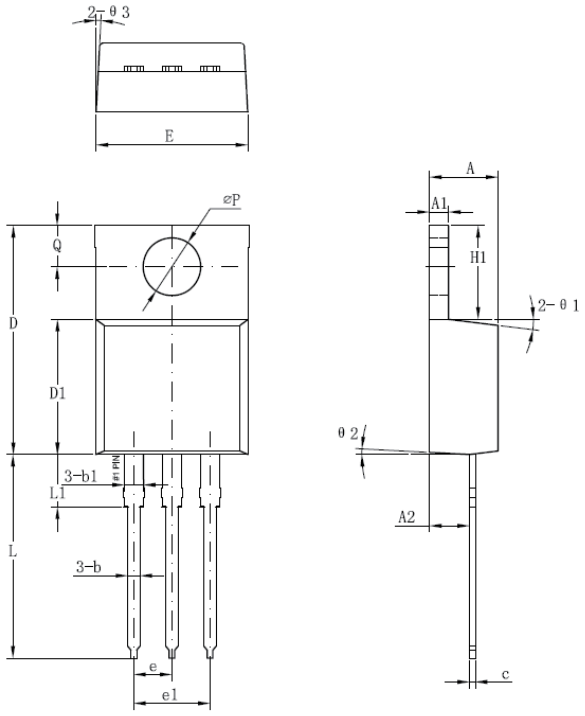


| Symbol | Millimeters | |
|---|---|---|
| | Min | Max |
| A | 3.56 | 4.83 |
| A1 | 0.51 | 1.40 |
| A2 | 2.03 | 2.92 |
| b | 0.38 | 1.02 |
| b1 | 1.14 | 1.78 |
| c | 0.31* | 0.61 |
| D | 14.22 | 16.51 |
| D1 | 8.38 | 9.15* |
| E | 9.65 | 10.67 |
| e | 2.54 | - |
| e1 | 4.98* | - |
| H1 | 5.84 | 6.86 |
| L | 12.70 | 14.73 |
| L1 | - | 6.35 |
| øP | 3.53 | 4.09 |
| Q | 2.54 | 3.43 |

Footnote *: The spec. does not comply with JEDEC spec.

## Packing Options

| Part Number | Marking | Packing Mode | M.O.Q |
|---|---|---|---|
| MBR20150CT | MBR20150CT | 50pcs / Tube | 1000 |

## Tube Specification

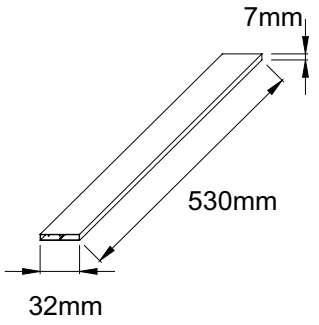


## Part Numbering and Marking System

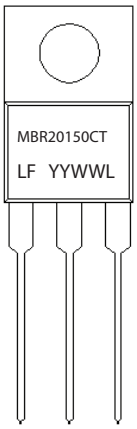


MBR = Device Type
20 = Forward Current (20A)
150 = Reverse Voltage (150V)
CT = Configuration
LF = Littelfuse
YY = Year
WW = Week
L = Lot Number

©2015 Littelfuse, Inc
Specifications are subject to change without notice.
Revised:01/19/16