SP724 Series
3pF 8kV Diode Array

RoHS Pb GREEN

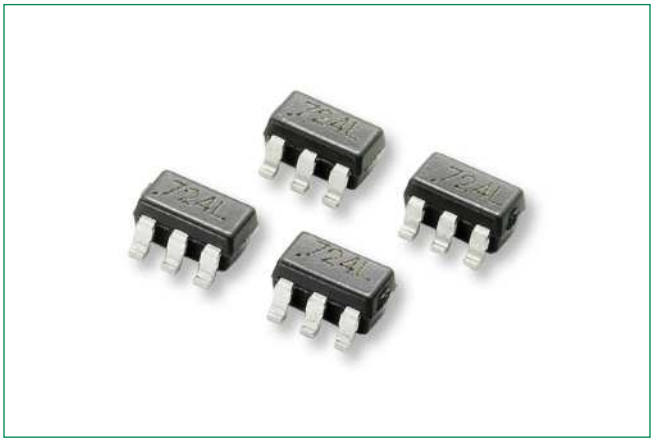

Additional Information

Resources | Accessories | Samples

Functional Block Diagram

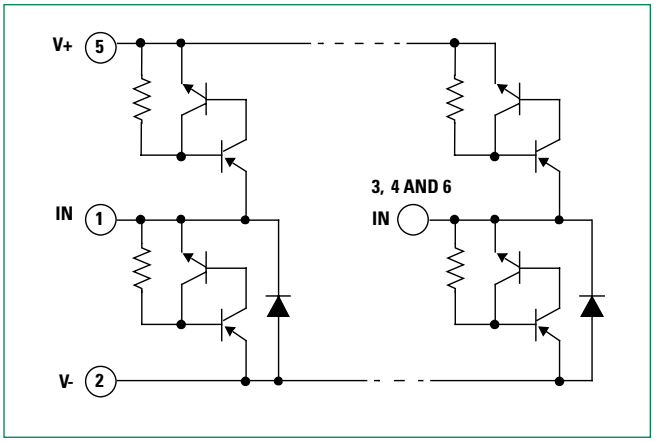

Notes:

1. The design of the SP724 SCR/Diode ESD Protection Arrays are covered by Littelfuse patent 4567500.

2. The full ESD capability of the SP724 is achieved when wired in a circuit that includes connection to both the V+ and V- pins. When handling individual devices, follow proper procedures for electrostatic discharge.

Life Support Note:

Not Intended for Use in Life Support or Life Saving Applications

The products shown herein are not designed for use in life sustaining or life saving applications unless otherwise expressly indicated.

Description

The SP724 is a quad array of transient voltage clamping circuits designed to suppress ESD and other transient over-voltage events. The SP724 is used to help protect sensitive digital or analog input circuits on data, signal, or control lines operating on power supplies up to 20VDC.

The SP724 is comprised of bipolar SCR/diode structures to protect up to four independent lines by clamping transients of either polarity to the power supply rails. The SP724 offers very low leakage (1nA Typical) and low input capacitance (3pF Typical). Additionally, the SP724 is rated to withstand the IEC 61000-4-2 ESD specification for both contact and air discharge methods to level 4.

The SP724 is connected to the sensitive input line and its associated power supply lines. Clamping action occurs during the transient pulse, turning on the diode and fast triggering SCR structures when the voltage on the input line exceeds one V_{BE} threshold above the V+ supply (or one VBE threshold below the V- supply). Therefore, the SP724P operation is unaffected by poor power supply regulation or voltage fluctuations within its operating range.

Features & Benefits

- An Array of 4 SCR/Diode Pairs in 6-Lead SOT-23
- ESD Capability per HBM Standards
  - IEC 61000-4-2, Direct Discharge 8kV (Level 4)
  - IEC 61000-4-2, Air Discharge 15kV (Level 4)
  - MIL STD 3015.7 >8kV
- Input Protection for Applications with Power Supplies Up to +20V (Single-Ended Voltage), and ±10V (Differential Voltage)
- Peak Current Capability
  - IEC 61000-4-5 (8/20µs) ±3A
  - Single Pulse, 100µs Pulse Width ±2.2A
- Low Input Leakage 1nA Typical
- Low Input Capacitance 3pF Typical
- Operating Temperature Range -40°C to 105°C

Applications

- Microprocessor/Logic Input Protection
- Data Bus Protection
- Analog Device Input Protection
- Voltage Clamp

Pinout

SP724
(SOT-23)
TOP VIEW

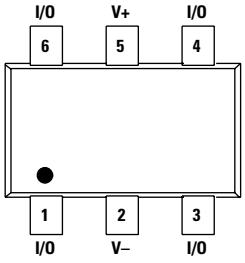

© 2023 Littelfuse, Inc.
Specifications are subject to change without notice.
Revised: GD. 05/24/23

SP724 Series
3pF 8kV Diode Array

Absolute Maximum Ratings

Parameter	Rating	Units
Continuous Supply Voltage, (V+) - (V-)	+20	V
Forward Peak Current, I_{IN} to V_{CC} , GND (Refer to Figure 5)	±2.2, 100µs	A

Caution: Stresses above those listed in "Absolute Maximum Ratings" may cause permanent damage to the device. This is a stress only rating and operation of the device at these or any other conditions above those indicated in the operational sections of this specification is not implied.

Note: ESD Ratings and Capability - See Figure 1, Table 1

Thermal Information

Parameter	Rating	Units
Thermal Resistance (Typical, Note 3)	θ_{JA}	°C/W
SOT Package	220	°C/W
Maximum Storage Temperature Range	-65 to 150	°C
Maximum Junction Temperature	150	°C
Maximum Lead Temperature (Soldering 20-40s) (SOT - Lead Tips Only)	260	°C

Note: θ_{JA} is measured with the component mounted on an evaluation PC board in free air.

Electrical Characteristics T_A = -40°C to 105°C, V_{IN} = 0.5V_{CC} , Unless Otherwise Specified

Parameter	Symbol	Test Conditions	Min	Typ	Max	Units
Operating Voltage Range, V_{SUPPLY} = [(V+) - (V-)] (Notes 4, 5)	V_{SUPPLY}		1	-	20	V
Forward Voltage Drop						
Forward Voltage Drop						
IN to V-	V_{FWDL}	I_{IN} = 1A (Peak Pulse)	-	2	-	V
IN to V+	V_{FWDH}		-	2	-	V
Input Leakage Current	I_{IN}		-10	1	10	nA
Quiescent Supply Current	$I_{QUIESCENT}$	V+ = 20V, V- = GND	-	-	100	nA
Equivalent SCR ON Threshold		(Note 6)	-	1.1	-	V
Equivalent SCR ON Resistance		V_{FWD}/I_{FWD} (Note 6)	-	1.0	-	Ω
Input Capacitance	C_{IN}		-	3	-	pF

Notes:

4. In automotive and other battery charging systems, the SP724 power supply lines should be externally protected for load dump and reverse battery. When the V+ and V- Pins are connected to the same supply voltage source as the device or control line under protection, a current limiting resistor should be connected in series between the external supply and the SP724 supply pins to limit reverse battery current to within the rated maximum limits.
5. Bypass capacitors of typically 0.01µF or larger should be connected closely between the V+ and V- Pins for all applications.
6. Refer to the Figure 3 graph for definitions of equivalent "SCR ON Threshold" and "SCR ON Resistance". These characteristics are given here for information to determine peak current and dissipation under EOS conditions.

Typical Application of the SP724

Application as an Input Clamp for Over-voltage, Greater than 1V_{BE} Above V+ or less than -1V_{BE} below V-)

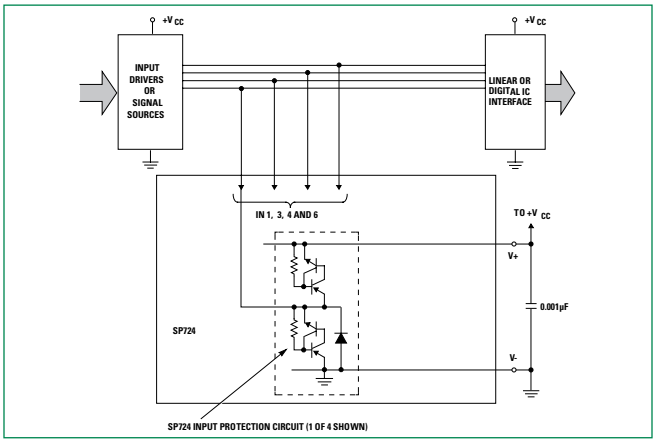

© 2023 Littelfuse, Inc.
Specifications are subject to change without notice.
Revised: GD. 05/24/23

SP724 Series
3pF 8kV Diode Array

ESD Capability

ESD rating is dependent on the defined test standard. The evaluation results for various test standards and methods based on Figure 1 are shown in Table 1.3

The SP724 has a Level 4 rating when tested to the IEC 61000-4-2 Human Body Model (HBM) standard and connected in a circuit in which the V+ and V- pins have a return path to ground. Level 4 specifies a required capability greater than 8kV for direct discharge and greater than 15kV for air discharge.

The "Modified" MIL-STD-3015.7 condition is defined as an "in-circuit" method of ESD testing, the V+ and V- pins have a return path to ground.The SP724 ESD capability is greater than 8kV with 100pF discharged through 1.5kΩ. By strict definition of the standard MIL-STD-3015.7 method using "pin-to-pin" device testing, the ESD voltage capability is greater than 2kV.

For the SP724 EIAJ IC121 Machine Model (MM) standard, the ESD capability is typically greater than 1.8kV with 200pF discharged through 0kΩ.

The Charged Device model is based upon the self-capacitance of the SOT-23 package through 0kΩ.

Figure 1:
Electrostatic Discharge Test

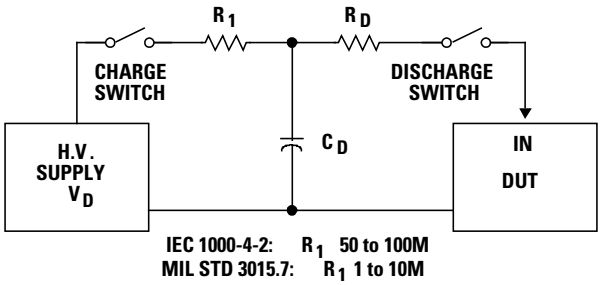

Table 1:
ESD Test Conditions

Standard	Type/Mode	R_D	C_D	$\pm V_D$
IEC 61000-4-2 (Level 4)	HBM, Air Discharge	330 Ω	150pF	15kV
	HBM, Direct Discharge	330 Ω	150pF	8kV
MIL-STD-3015.7	Modified HBM	1.5k Ω	100pF	8kV †
	Standard HBM	1.5k Ω	100pF	2kV
EIAJ IC121	Machine Model	0k Ω	200pF	400V
US ESD DS 5.3	Charged Device Model	0k Ω	NA	3kV

†Upper limit of laboratory test set.

Figure 2:
Low Current SCR Forward Voltage Drop Curve

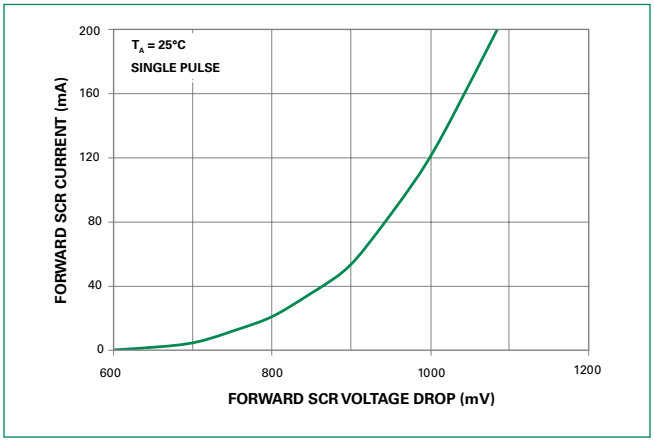

Figure 3:
High Current SCR Forward Voltage Drop Curve

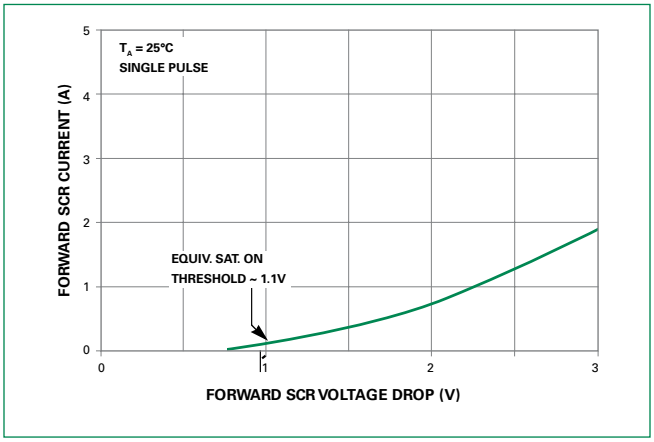

© 2023 Littelfuse, Inc.
Specifications are subject to change without notice.
Revised: GD. 05/24/23

SP724 Series
3pF 8kV Diode Array

Peak Transient Current Capability for Long Duration Surges

The peak transient current capability is inversely proportional to the width of the current pulse. Testing was done to fully evaluate the SP724's ability to withstand long duration current pulses using the circuit of Figure 4. Figure 5 shows the point of overstress as defined by increased leakage in excess of the data sheet published limits. The safe operating range of the transient peak current should be limited to no more than 75% of the measured overstress level for any given pulse width as shown in the curve of Figure 5.

The test circuit of Figure 4 is shown with a positive pulse input. For a negative pulse input, the (-) current pulse input goes to an SP724 'IN' input pin and the (+) current pulse input goes to the SP724 V- pin. The V+ to V- supply of the SP724 must be allowed to float. (i.e., It is not tied to the ground reference of the current pulse generator.)

Note that two input pins of the SP724 may be paralleled to improve current (and ESD) capability. The sustained peak current capability is increased to nearly twice that of a single pin.

Figure 4:
Typical SP724 Peak Current Test Circuit with a Variable Pulse Width Input

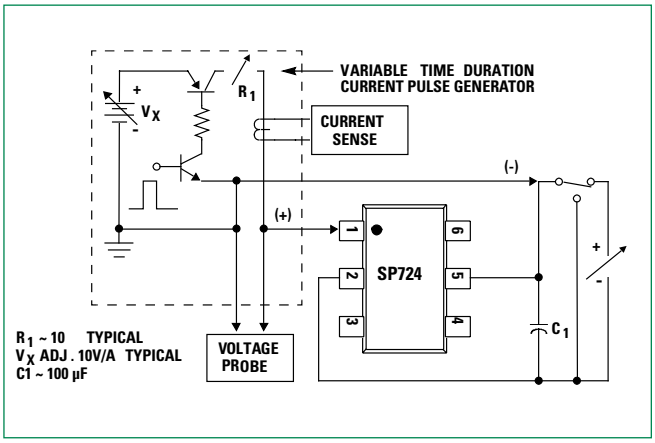

Figure 5:
SP724 Typical Nonrepetitive Peak Current Pulse Capability
Showing the Measured Point of Overstress in Amperes vs pulse width time in milliseconds

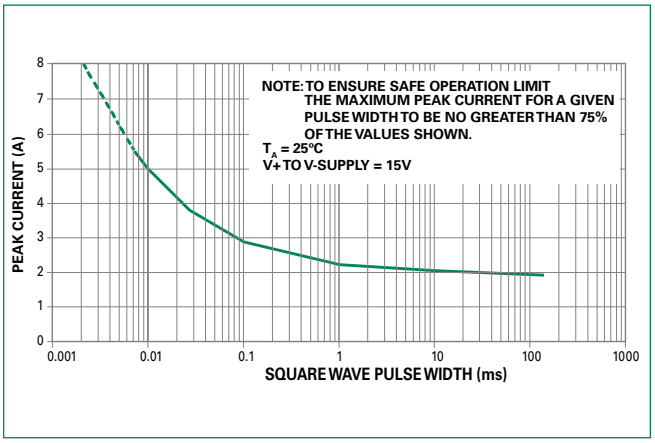

© 2023 Littelfuse, Inc.
Specifications are subject to change without notice.
Revised: GD. 05/24/23

SP724 Series
3pF 8kV Diode Array

Soldering Parameters

Reflow Condition		Pb – Free assembly
Pre Heat	**- Temperature Min ($T_{s(min)}$)**	150°C
	- Temperature Max ($T_{s(max)}$)	200°C
	- Time (min to max) (t_s)	60 – 120 secs
Average ramp up rate (Liquidus) Temp (T_L) to peak		5°C/second max
$T_{S(max)}$ to T_L - Ramp-up Rate		5°C/second max
Reflow	**- Temperature (T_L) (Liquidus)**	217°C
	- Temperature (t_L)	60 – 150 seconds
Peak Temperature (T_P)		$260^{+0/-5}$ °C
Time within 5°C of actual peak Temperature (t_p)		30 seconds
Ramp-down Rate		5°C/second max
Time 25°C to peak Temperature (T_P)		8 minutes Max.
Do not exceed		260°C

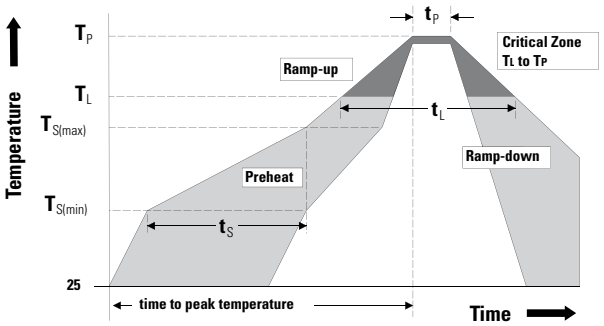

Package Dimensions — Small Outline Transistor Plastic Packages (SOT23-6)

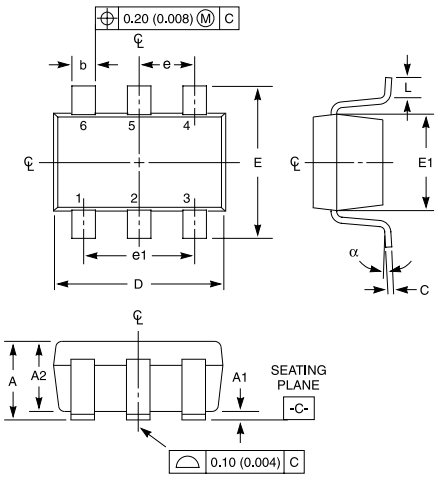

Recommended Solder Pad Layout

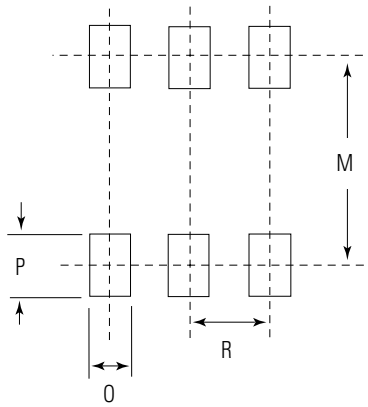

Package	SOT23-6				
Pins	6				
JEDEC	MO-178				
	Millimeters		Inches		Notes
	Min	Max	Min	Max	
A	0.900	1.450	0.035	0.057	-
A1	0.000	0.150	0.000	0.006	-
A2	0.900	1.300	0.035	0.051	-
b	0.300	0.500	0.0118	0.0196	-
C	0.080	0.220	0.0031	0.009	-
D	2.800	3.000	0.11	0.118	3
E	2.600	3.000	0.102	0.118	-
E1	1.500	1.750	0.06	0.069	3
e	0.95 Ref		0.0374 ref		-
e1	1.9 Ref		0.0748 Ref		-
L	0.100	0.600	0.004	0.023	4,5
N	6		6		6
a	0°	10°	0°	10°	-
M		2.590		0.102	-
O		0.690		.027 TYP	-
P		0.990		.039 TYP	-
R		0.950		0.038	-

Notes:
1. Dimensioning and tolerances per ANSI 14.5M-1982.
2. Package conforms to EIAJ SC-74 (1992).
3. Dimensions D and E1 are exclusive of mold flash, protrusions, or gate burrs.
4. Footlenth L measured at reference to seating plane.
5. "L" is the length of flat foot surface for soldering to substrate.
6. "N" is the number of terminal positions.
7. Controling dimension: MILLIMETER. Converted inch dimensions are not necessarily exact.

© 2023 Littelfuse, Inc.
Specifications are subject to change without notice.
Revised: GD. 05/24/23

SP724 Series
3pF 8kV Diode Array

Part Numbering System

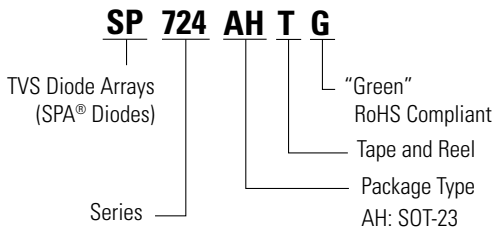

Product Characteristics

Lead Plating	Matte Tin
Lead Material	Copper Alloy
Lead Coplanarity	0.004 inches (0.102mm)
Substitute Material	Silicon
Body Material	Molded Epoxy
Flammability	UL 94 V-0

Notes:
1. All dimensions are in millimeters.
2. Dimensions include solder plating.
3. Dimensions are exclusive of mold flash & metal burr.
4. Blo is facing up for mold and facing down for trim/form, i.e. reverse trim/form.
5. Package surface matte finish VDI 11-13.

Ordering Information

Part Number	Temp. Range (°C)	Package	Marking	Min. Order Qty.
SP724AHTG	-40 to 105	Tape and Reel	724G	3000

Embossed Carrier Tape & Reel Specification — SOT23-6

8mm TAPE AND REEL

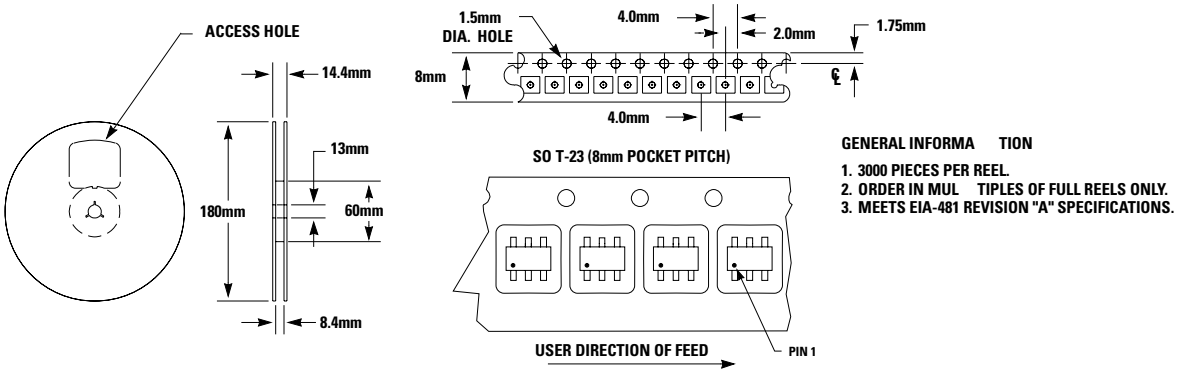

GENERAL INFORMA TION

1. 3000 PIECES PER REEL.
2. ORDER IN MUL TIPLES OF FULL REELS ONLY.
3. MEETS EIA-481 REVISION "A" SPECIFICATIONS.

Disclaimer Notice - Information furnished is believed to be accurate and reliable. However, users should independently evaluate the suitability of and test each product selected for their own applications. Littelfuse products are not designed for, and may not be used in, all applications. Read complete Disclaimer Notice at www.littelfuse.com/disclaimer-electronics.

© 2023 Littelfuse, Inc.
Specifications are subject to change without notice.
Revised: GD. 05/24/23