2PRO DEVICES

Littelfuse®
Expertise Applied | Answers Delivered

The 2Pro product is an integrated overcurrent/over-voltage protection device. The RoHS-compliant component incorporates PolySwitch PPTC (Polymeric Positive Temperature Coefficient) technology and MOV (Metal Oxide Varistor) technology in a single device to help reduce board space requirements and component count.

Damage to telephony communications equipment can be caused by various sources including lightning, electrostatic discharge (ESD), power contact and induction with AC lines. The 2Pro TM2P-10271 devices help provide current limiting during overcurrent events and voltage clamping during overvoltage events. After a fault condition is removed and power is cycled, 2Pro devices will reset so that the equipment remains operational.

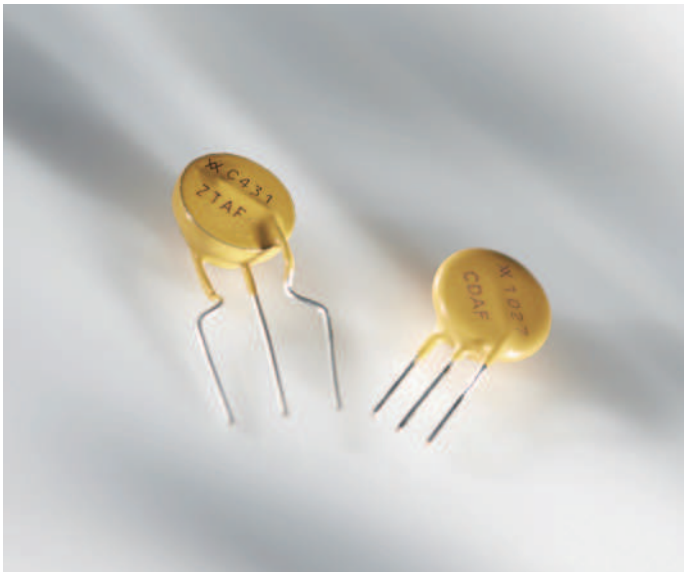

The 2Pro device helps address the need for resettable circuit protection devices for use in cost-sensitive PSTN (Public Switched Telephone Network) and VoIP (Voice over Internet Protocol) telephony equipment. The widespread use of VoIP gateways in homes and enterprise environments as the primary means of voice delivery requires the utmost safety and reliability in equipment. 2Pro circuit protection devices help manufacturers comply with global safety standards, including UL 60950, TIA-968-A, IEC 60950 and ITU-T K.20/K.21. The UL 497A listed protector also helps provide ESD protection.

BENEFITS

- Single device helps reduce component count and footprint
- Helps reduce warranty returns
- Helps equipment comply with surge tests per: TIA-968-A, IEC 60950, ITU-T K.20/K.21
- Helps simplify UL 60950 testing
- Helps equipment comply with UL 60950

FEATURES

- RoHS compliant
- Halogen free
  (refers to: Br≥900ppm, Cl≥900ppm, Br+Cl≥1500ppm)
- Single overcurrent, overvoltage and ESD protection device
- Resettable overcurrent protection

APPLICATIONS

- Cordless telephones
- VoIP gateways
- Fax machines
- Data modems
- Set-top boxes
- Security systems
- MDF modules
- Analog and ISDN linecards

Specifications subject to change without notice. ©2016 Littelfuse, Inc.

Table 2P1 — Electrical Characteristics

Overcurrent (terminals 1 – 2) — Performance ratings @ 20°C								
			Resistance† (Ω)			Time-to-Trip (s)†		
Part Number	I_{HOLD} (A)	I_{TRIP} (A)	R_{MIN}	R_{MAX}	$R_{1\ MAX}$*	Typ	Max	
TM2P-10271	0.15	0.30	6.50	14.00	16.00	0.90	3.00	(@1A)
LVM2P-015R10431	0.15	0.30	6.50	14.00	16.00	0.90	3.00	(@1A)
LVM2P-035R14431	0.35	0.75	1.40	2.20	2.80	0.50	2.00	(@3A)
LVM2P-075R14431	0.75	1.50	0.37	0.80	1.00	0.90	1.20	(@7A)

Overvoltage (Terminals 2 – 3)					
	Varistor Voltage V @ 1mA		DC Resistance @ 100V	Maximum Clamping	Rated Wattage
Part Number	DC (V)	Tolerance	(MΩ)	(V)	(W)
TM2P-10271	260	+14% -7%	>10	455 (@25A)	0.25
LVM2P-015R10431	430	+10% -10%	>10	710 (@ 25A)	0.25
LVM2P-035R14431	430	+10% -10%	>10	710 (@ 50A)	0.60
LVM2P-075R14431	430	+10% -10%	>10	710 (@ 50A)	1.00

* Maximum device resistance at 20°C measured 1 hour post trip.
† Corresponds to operation below varistor voltages.

Electrical Schematic

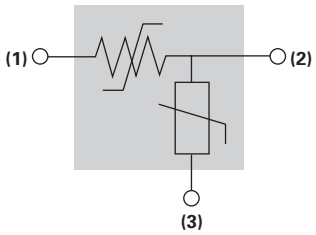

Table 2P2 — Dimensions in Millimeters and (Inches*)

Part Number	A		B		C		D		E	F		Figure
	Min	Max	Min	Max	Min	Max	Min	Max	Nom	Min	Max	
TM2P-10271												
mm	—	12.0	—	15.0	—	6.6	6.0	—	2.5	—	12.0	2P1
in*	—	(0.47)	—	(0.59)	—	(0.26)	(0.24)	—	(0.10)	—	(0.47)	
LVM2P-015R10431												
mm	—	12.0	—	17.0	—	7.4	8.5	11.5	5.1			2P2
in*	—	(0.47)	—	(0.67)	—	(0.29)	(0.34)	(0.45)	(0.20)			
LVM2P-035R14431												
mm	—	16.0	—	21.0	—	7.4	3.0	5.0	5.1			2P2
in*	—	(0.63)	—	(0.83)	—	(0.29)	(0.12)	(0.20)	(0.20)			
LVM2P-075R14431												
mm	—	16.0	—	21.0	—	7.4	3.0	5.0	2.5			2P3
in*	—	(0.63)	—	(0.83)	—	(0.29)	(0.12)	(0.20)	(0.10)			

* The dimensions in inches are rounded approximations.

Figures 2P1-2P3 — Dimension Figures

Figure 2P1

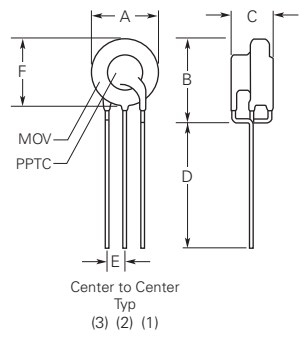

Figure 2P2

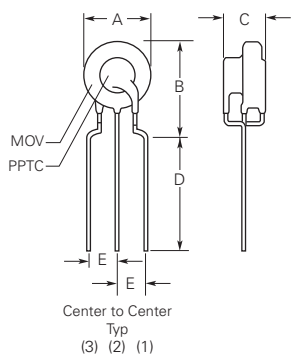

Figure 2P3

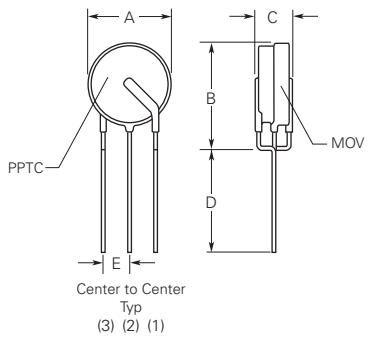

Specifications subject to change without notice. ©2016 Littelfuse, Inc.
HF Halogen Free
RoHS Compliant, ELV Compliant

Figure 2P4 — Typical Time-to-Trip at 25°C

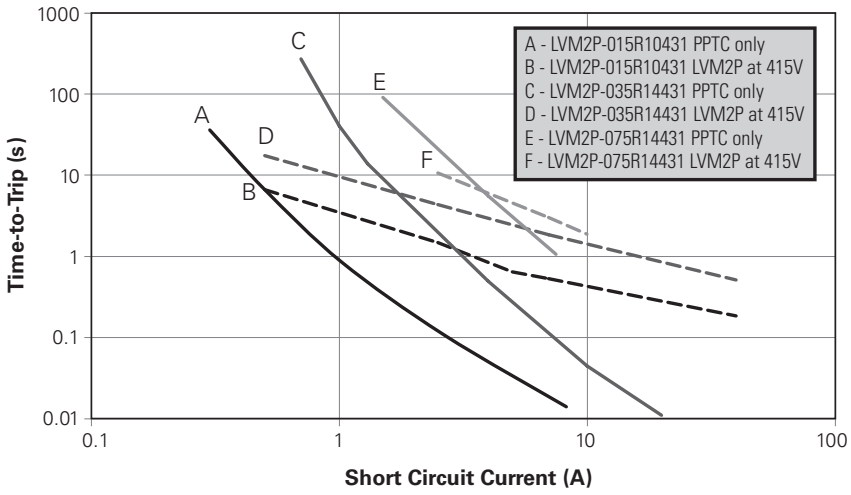

Table 2P3 — Physical Characteristics and Environmental Specifications

Physical Characteristics	
Lead Material	Tin-plated Copper, 0.33mm² (22AWG), 0.64mm (0.025in)
Flammability	IEC 695-2-2 Needle Flame Test for 20s
Soldering Characteristics	ANSI Approved IPC/EIA/JEDEC J-STD-002, Category 3
Solder Heat Withstand	per IEC-STD 68-2-20, Test Tb, Method 1A, Condition B, can withstand 10 Seconds at 260°C ± 5°C
Environmental Specifications	
Test	**Conditions**
Passive Aging	60°C, 1000 Hours / 85°C, 1000 Hours
Humidity Aging	85°C, 85% RH, 500 Hours
Active Aging	60°C, 90% RH, 60VDC Bias, 1000 Hours
Thermal Shock	125°C, -55°C (10 Times)
Solvent Resistance	MIL-STD-202, Method 215K

Note: Storage conditions: 40°C max, 70% RH max, devices should remain in original sealed bag prior to use.
Devices may not meet specified values if these storage conditions are exceeded.

Table 2P4 — Packaging and Marking Information

Part Number	Bag Quantity	Tape and Reel Quantity	Standard Package	Part Marking
TM2P-10271	250	—	3,000	1027 & Batch #
TM2P-10271-2	—	1,000	5,000	1027 & Batch #
LVM2P-015R10431	250	—	3,000	C431 & Batch #
LVM2P-035R14431	250	—	3,000	A431 & Batch #
LVM2P-075R14431	250	—	3,000	B431 & Batch #

Table 2P5 — Ordering Information

Bulk	250	pieces/bag
	3,000	pieces/box
Tape & Reel	1,000	pieces/reel
	5,000	pieces/box

Wave Soldering and Rework Recommendations

Recommended Wave Soldering for Radial-leaded Devices

- Soldering temperature profile
  (Temperature characteristic at component terminal with dual wave soldering)

Rework

- If a device is removed from the board, it should be discarded and replaced with a new device

Figure 2P5

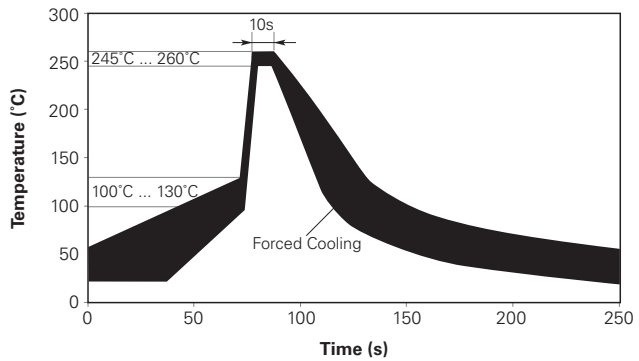

Specifications subject to change without notice. ©2016 Littelfuse, Inc.
HF Halogen Free RoHS Compliant, ELV Compliant

Table 2P6 — Tape and Reel Specifications in Millimeters (mm)

2Pro devices are available in tape and reel packaging per EIA 468-B standard.

Description	EIA Mark	IEC Mark	Dimension (mm)	Tolerance
Carrier Tape Width	W	W	18	-0.5/ +1.0
Hold Down Tape Width	W_4	W_0	5	Min
Top Distance Between Tape Edges	W_6	W_2	3	Max
Sprocket Hole Position	W_5	W_1	9	-0.5/ +0.75
Sprocket Hole Diameter	D_0	D_0	4	±0.2
Abcissa to Plane (Kinked Lead)*	H_0	H_0	16	-0.5/0.6
Abcissa to Top	H_1	H_1	32.2	Max
Overall Width with Lead Protrusion	—	C_1	43.2	Max
Overall Width Without Lead Protrusion	—	C_2	42.5	Max
Lead Protrusion	L_1	l_1	1.0	Max
Protrusion of Cut-out	L	L	11	Max
Protrusion Beyond Hold Down Tape	l_2	l_2	Not Specified	—
Sprocket Hole Pitch	P_0	P_0	12.7	±0.3
Pitch Tolerance	—	—	20 Consecutive	±1
Tape Thickness	t	t	0.9	Max
Tape Thickness with Splice*	t_1	—	2.0	Max
Splice Sprocket Hole Alignment	—	—	0	±0.3
Body Lateral Deviation	Dh	Dh	0	±0.1
Body Tape Plane Deviation	Dp	Dp	0	±1.3
Ordinate to Component Center Lead	P_2	P_2	6.35	±0.7
Lead Spacing*	F_1, F_2	F_1, F_2	2.54	-0.1/+0.4
Reel Width	w_2	w	56	Max
Reel Diameter	a	d	370	Max
Space Between Flanges	w_1	—	51.2	Max
Arbor Hole Diameter	c	f	26	±12.0
Core Diameter	n	h	80	Max
Box	—	—	56/372/372	Max
Consecutive Missing Pieces*	—	—	3 Max	—
Empty Places Per Reel*	—	—	Not Specified	—

Note: *Differs from EIA specification.

Figure 2P6 — EIA Referenced Taped Component Dimensions

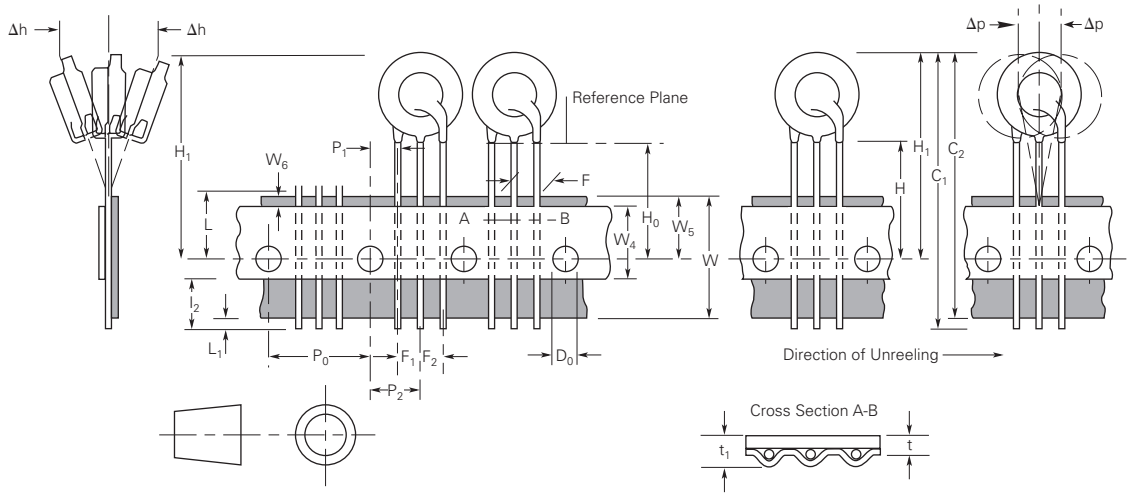

Figure 2P7 — EIA Referenced Reel Dimensions

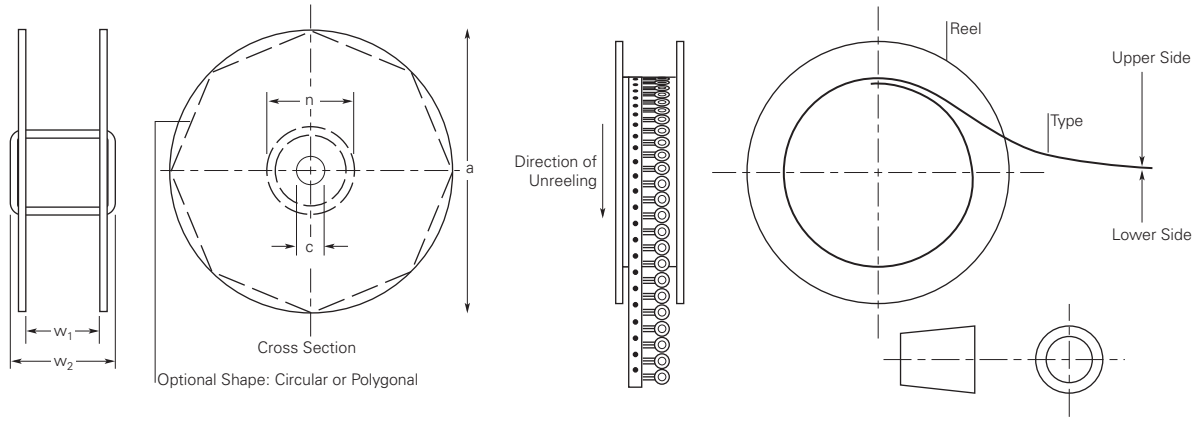

Part Numbering System

TM 2P - 10 271 -2

Packaging
Blank : Bulk
-2 : Tape and Reel

Varistor Voltage Indicator
The first two digits indicate voltage
The third digit signifies the power of ten
For example : 220 : 22 x 10^0 = 22V
221 : 22 x 10^1 = 220V
112 : 11 x 10^2 = 1100V

Typical PPTC Resistance (ohms)

2Pro Series

Telecom Module

LVM 2P - 015 R 10 431

MOV Breakover Voltage at 1mA Expressed as:
431: 43 x 10^1

MOV Diameter in mm

Radial Leaded

PPTC Hold Current

2Pro Series

Line Voltage Module

Notice:

Littelfuse products are not designed for, and shall not be used for, any purpose (including, without limitation, automotive, military, aerospace, medical, life-saving, life-sustaining or nuclear facility applications, devices intended for surgical implant into the body, or any other application in which the failure or lack of desired operation of the product may result in personal injury, death, or property damage) other than those expressly set forth in applicable Littelfuse product documentation. Warranties granted by Littelfuse shall be deemed void for products used for any purpose not expressly set forth in applicable Littelfuse documentation. Littelfuse shall not be liable for any claims or damages arising out of products used in applications not expressly intended by Littelfuse as set forth in applicable Littelfuse documentation. The sale and use of Littelfuse products is subject to Littelfuse Terms and Conditions of Sale, unless otherwise agreed by Littelfuse.

Specifications subject to change without notice. ©2016 Littelfuse, Inc.