LMx24, LMx24x, LMx24xx, LM2902, LM2902x, LM2902xx, LM2902xxx Quadruple Operational Amplifiers

1 Features

- Next-generation LM324B and LM2902B
- B versions are drop-in replacements for all versions of LM224, LM324, and LM2902
- Improved specifications of B version
  - Supply range: 3V to 36V (B, BA versions)
  - Low input offset voltage: ±2mV (BA version) / 3mV (B version)
  - ESD rating: 2kV (HBM), 1.5kV (CDM)
  - EMI rejection: integrated RF and EMI filter
  - Low input bias current: 50nA maximum (across –40°C to +125°C)
- Common-mode input voltage range includes V–
- Input voltage differential are drivable up to the supply voltage
- For dual B versions, see LM358B and LM2904B

2 Applications

- Merchant network and server power supply units
- Multi-function printers
- Power supplies and mobile chargers
- Desktop PC and motherboard
- Indoor and outdoor air conditioners
- Washers, dryers, and refrigerators
- AC inverters, string inverters, central inverters, and voltage frequency drives
- Uninterruptible power supplies

3 Description

The LM324B and LM2902B devices are the next-generation versions of the industry-standard operational amplifiers (op amps) LM324 and LM2902, which include four high-voltage (36V) op amps.

These devices provide outstanding value for cost-sensitive applications, with features including low offset (600µV, typical), common-mode input range to ground, and high differential input voltage capability.

The LM324B and LM2902B are unity-gain stable and achieve a low offset voltage maximum of 3mV (2mV maximum for LM324BA and LM2902BA) and quiescent current of 240µA per amplifier (typical). High ESD (2kV HBM and 1.5kV CDM) and integrated EMI and RF filters enable the LM324B and LM2902B devices to be used in the most rugged, environmentally challenging applications.

The LM324B and LM2902B can drop-in replace all versions of the LM224, LM324, and LM2902 devices.

Device Information

PART NUMBER(1)	PACKAGE	PACKAGE SIZE(2)
LM124, LM224, LM224A, LM224K, LM224KA, LM324, LM324A, LM324B, LM324BA, LM324K, LM324KA, LM2902, LM2902B, LM2902BA, LM2902K, LM2902KAV, LM2902KV,	D (SOIC, 14)	8.65mm × 6mm
LM324, LM324A, LM324B, LM324BA, LM324K, LM324KA, LM2902, LM2902B, LM2902BA, LM1902K, LM2902KAV, LM2902KV	PW (TSSOP, 14)	5mm × 6.4mm
LM224, LM224A, LM224K, LM224KA, LM324, LM324A, LM324K, LM324KA, LM2902, LM2902K	N (PDIP, 14)	19.3mm × 9.4mm
LM324, LM324A, LM324K, LM324KA, LM2902, LM2902K	NS (SOP, 14)	10.3mm × 7.8mm
LM324A, LM2902K	DB (SSOP, 14)	6.2mm × 7.8mm
LM124, LM124A	FK (LCCC, 20)	8.89mm × 8.89mm
	J (CDIP, 14)	19.56mm × 6.67mm
	W (CFP, 14)	9.21mm × 6.3mm
LM324B, LM2902B	RTE (WQFN, 16)	3mm × 3mm

(1) For more information, see Section 12.
(2) The package size (length × width) is a nominal value and includes pins, where applicable.

An IMPORTANT NOTICE at the end of this data sheet addresses availability, warranty, changes, use in safety-critical applications, intellectual property matters and other important disclaimers. PRODUCTION DATA.

Table of Contents

1 Features....1
2 Applications....1
3 Description....1
4 Related Products....2
5 Pin Configuration and Functions....3
6 Specifications....5
6.1 Absolute Maximum Ratings....5
6.2 ESD Ratings....5
6.3 Recommended Operating Conditions....6
6.4 Thermal Information....6
6.5 Electrical Characteristics for LM324B and LM324BA....7
6.6 Electrical Characteristics for LM2902B and LM2902BA....9
6.7 Electrical Characteristics for LM324, LM324K, LM224, LM224K, and LM124....11
6.8 Electrical Characteristics for LM2902, LM2902K, LM2902KV and LM2902KAV....12
6.9 Electrical Characteristics for LM324A, LM324KA, LM224A, LM224KA, and LM124A....13
6.10 Operating Conditions....13
6.11 Typical Characteristics: LM324B and LM2902B....14
6.12 Typical Characteristics: All Devices Except B and BA Versions....20
7 Parameter Measurement Information....21
8 Detailed Description....21
8.1 Overview....21
8.2 Functional Block Diagram....22
8.3 Feature Description....23
8.4 Device Functional Modes....23
9 Application and Implementation....24
9.1 Application Information....24
9.2 Typical Application....24
9.3 Power Supply Recommendations....25
9.4 Layout....26
10 Device and Documentation Support....27
10.1 Receiving Notification of Documentation Updates....27
10.2 Support Resources....27
10.3 Trademarks....27
10.4 Electrostatic Discharge Caution....27
10.5 Glossary....27
11 Revision History....27
12 Mechanical, Packaging, and Orderable Information....29

4 Related Products

SPECIFICATION	LM324B LM324BA	LM2902B LM2902BA	LM324 LM324A	LM324K LM324KA	LM2902	LM2902K LM2902KV LM2902KAV	LM224 LM224A	LM224K LM224KA	LM124 LM124A	UNIT
Supply voltage	3 to 36	3 to 36	3 to 30	3 to 30	3 to 26	3 to 26 (K) 3 to 30 (KV, KAV)	3 to 30	3 to 30	3 to 30	V
Offset voltage (max, 25°C)	± 3 ± 2	± 3 ± 2	± 7 ± 3	± 7 ± 3	± 7	± 7 (K, KV) ± 2 (KAV)	± 5 ± 3	± 5 ± 3	± 5 ± 2	mV
Input bias current at 25 °C (typ / max)	10 / 35	10 / 35	20 / 250 15 / 100	20 / 250 15 / 100	20 / 250	20 / 250	20 / 150 15 / 80	20 / 150 15 / 80	20 / 150 – / 50	nA
ESD (HBM)	2000	2000	500	2000	500	2000	500	2000	500	V
Operating ambient temperature	−40 to +85	−40 to +125	0 to 70	0 to 70	−40 to +125	−40 to +125	−25 to +85	−25 to +85	−55 to +125	°C

Copyright © 2025 Texas Instruments Incorporated

5 Pin Configuration and Functions

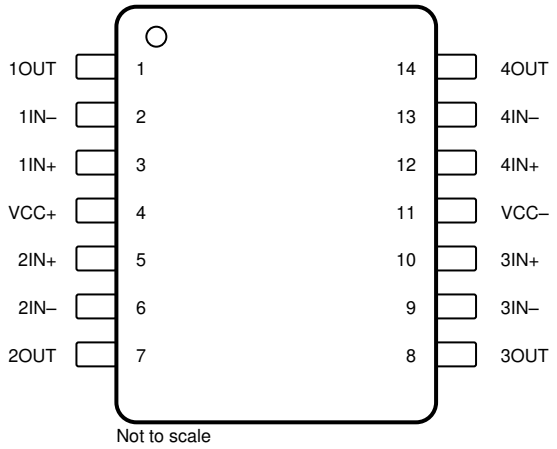

Figure 5-1. D, DB, J, N, NS, PW, W Packages, 14-Pin SOIC, SSOP, CDIP, PDIP, SO, TSSOP, CFP (Top View)

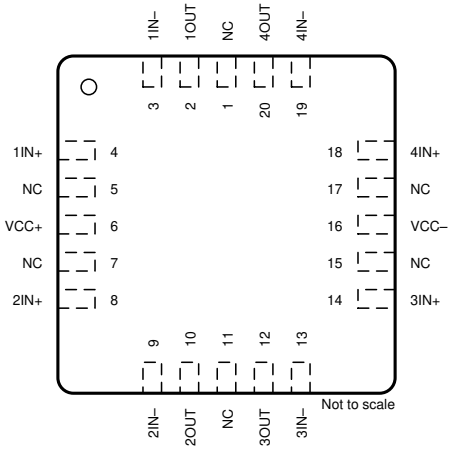

Figure 5-2. FK Package, 20-Pin LCCC (Top View)

Table 5-1. Pin Functions

PIN			TYPE	DESCRIPTION
NAME	NO.			
	FK (LCCC)	D (SOIC), DB (SSOP), J (CDIP), N (PDIP), NS (SO), PW (TSSOP), W (CFP)		
1IN–	3	2	Input	Negative input
1IN+	4	3	Input	Positive input
1OUT	2	1	Output	Output
2IN–	9	6	Input	Negative input
2IN+	8	5	Input	Positive input
2OUT	10	7	Output	Output
3IN–	13	9	Input	Negative input
3IN+	14	10	Input	Positive input
3OUT	12	8	Output	Output
4IN–	19	13	Input	Negative input
4IN+	18	12	Input	Positive input
4OUT	20	14	Output	Output
NC	1, 5, 7, 11, 15, 17	—	—	Do not connect
VCC–	16	11	—	Negative (lowest) supply or ground (for single-supply operation)
VCC+	6	4	—	Positive (highest) supply

Copyright © 2025 Texas Instruments Incorporated

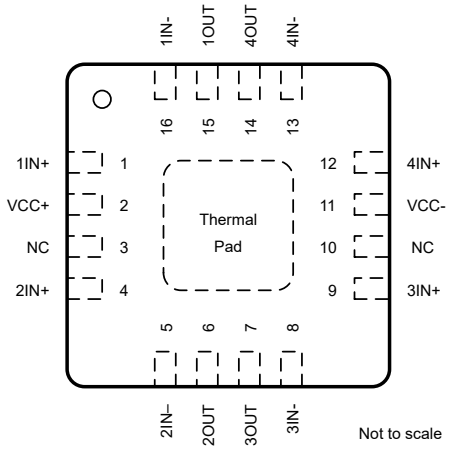

Figure 5-3. RTE Package, 16-Pin WQFN (Top View)

Table 5-2. Pin Functions

PIN		TYPE	DESCRIPTION
NAME	NO.		
1IN–	16	Input	Negative input
1IN+	1	Input	Positive input
1OUT	15	Output	Output
2IN–	5	Input	Negative input
2IN+	4	Input	Positive input
2OUT	6	Output	Output
3IN–	8	Input	Negative input
3IN+	9	Input	Positive input
3OUT	7	Output	Output
4IN–	13	Input	Negative input
4IN+	12	Input	Positive input
4OUT	14	Output	Output
NC	3, 10	—	Do not connect
VCC–	11	—	Negative (lowest) supply or ground (for single-supply operation)
VCC+	2	—	Positive (highest) supply

Copyright © 2025 Texas Instruments Incorporated

6 Specifications

6.1 Absolute Maximum Ratings

over operating free-air temperature range (unless otherwise noted)[1]

		LM324B, LM324BA, LM2902B, LM2902BA		LM2902		LM324xx, LM224xx, LM2902xxx, LM124x		UNIT
		MIN	MAX	MIN	MAX	MIN	MAX	
Supply voltage, V_{CC} [2]			40		26		32	V
Differential input voltage, V_{ID} [3]			±40		±26		±32	V
Input voltage, V_I (either input)		–0.3	40	–0.3	26	–0.3	32	V
Duration of output short circuit (one amplifier) to ground at (or below) T_A = 25°C, V_{CC} ≤ 15V[4]		Unlimited		Unlimited		Unlimited		
Operating virtual junction temperature, T_J			150		150		150	°C
Case temperature for 60 seconds	FK package						260	°C
Lead temperature 1.6mm (1/16 inch) from case for 60 seconds	J or W package				300		300	°C
Storage temperature, T_{stg}		–65	150	–65	150	–65	150	°C

(1) Operation outside the *Absolute Maximum Ratings* may cause permanent device damage. *Absolute Maximum Ratings* do not imply functional operation of the device at these or any other conditions beyond those listed under *Recommended Operating Conditions*. If used outside the *Recommended Operating Conditions* but within the *Absolute Maximum Ratings*, the device may not be fully functional, and this may affect device reliability, functionality, performance, and shorten the device lifetime.
(2) All voltage values (except differential voltages and V_{CC} specified for the measurement of I_{OS}) are with respect to the network GND.
(3) Differential voltages are at IN+, with respect to IN−.
(4) Short circuits from outputs to V_{CC} can cause excessive heating and eventual destruction.

6.2 ESD Ratings

			VALUE	UNIT
LM324B, LM324BA, LM2902B, LM2902BA, LM224K, LM224KA, LM324K, LM324KA, LM2902K, LM2902KV, LM2902KAV				
$V_{(ESD)}$	Electrostatic discharge	Human-body model (HBM), per ANSI/ESDA/JEDEC JS-001[1]	±1000	V
		Charged-device model (CDM), per JEDEC specification JESD22-C101[2]	±1000	
LM124, LM124A, LM224, LM224A, LM324, LM324A, LM2902				
$V_{(ESD)}$	Electrostatic discharge	Human-body model (HBM), per ANSI/ESDA/JEDEC JS-001[1]	±500	V
		Charged-device model (CDM), per JEDEC specification JESD22-C101[2]	±1000	

(1) JEDEC document JEP155 states that 500V HBM allows safe manufacturing with a standard ESD control process.
(2) JEDEC document JEP157 states that 250V CDM allows safe manufacturing with a standard ESD control process.

6.3 Recommended Operating Conditions

over operating free-air temperature range (unless otherwise noted)

			LM324B, LM324BA, LM2902B, LM2902BA		LM2902		LM324xx, LM224xx, LM2902xxx, LM124x		UNIT
			MIN	MAX	MIN	MAX	MIN	MAX	
V_{CC}	Supply voltage		3	36	3	26	3	30	V
V_{CM}	Common-mode voltage		0	V_{CC} – 2	0	V_{CC} – 2	0	V_{CC} – 2	V
T_A	Operating free air temperature	LM124x					–55	125	°C
		LM2902xxx, LM2902Bx	-40	125	–40	125			
		LM324Bx	-40	85					
		LM224xx					–25	85	
		LM324xx					0	70	

6.4 Thermal Information

THERMAL METRIC[1]		LMx24, LM2902						LMx24			UNIT
		D (SOIC)	DB (SSOP)	N (PDIP)	NS (SO)	PW (TSSOP)	RTE (WQFN)	FK (LCCC)	J (CDIP)	W (CFP)	
		14 PINS	14 PINS	14 PINS	14 PINS	14 PINS	16 PINS	20 PINS	14 PINS	14 PINS	
$R_{\theta JA}$ [2] [3]	Junction-to-ambient thermal resistance	99.3	106.5	83.5	90.4	124.7	64.9	74.5	84.7	153.4	°C/W
$R_{\theta JC(top)}$ [4]	Junction-to-case (top) thermal resistance	60.4	55.5	62.0	48.0	57.9	68.8	49.9	37.5	72.7	°C/W
$R_{\theta JB}$	Junction-to-board thermal resistance	57.5	56.8	57.7	49.2	80.7	40.2	49.0	72.2	146.5	°C/W
ψ_{JT}	Junction-to-top characterization parameter	19.8	18.2	40.5	14.4	8.4	4.9	42.9	31.0	48.3	°C/W
ψ_{JB}	Junction-to-board characterization parameter	57.0	55.8	57.1	48.8	79.8	40.0	48.9	67.3	129.2	°C/W
$R_{\theta JC(bot)}$	Junction-to-case (bottom) thermal resistance	—	—	—	—	—	23.6	7.3	18.8	10.1	°C/W

(1) For more information about traditional and new thermal metrics, see the *Semiconductor and IC Package Thermal Metrics* application note.
(2) Short circuits from outputs to V_{CC} can cause excessive heating and eventual destruction.
(3) Maximum power dissipation is a function of $T_{J(max)}$, $R_{\theta JA}$, and T_A. The maximum allowable power dissipation at any allowable ambient temperature is $P_D = (T_{J(max)} – T_A) / R_{\theta JA}$. Operating at the absolute maximum T_J of 150°C can affect reliability.
(4) Maximum power dissipation is a function of $T_{J(max)}$, $R_{\theta JA}$, and T_C. The maximum allowable power dissipation at any allowable case temperature is $P_D = (T_{J(max)} – T_C) / R_{\theta JC}$. Operating at the absolute maximum T_J of 150°C can affect reliability.

Copyright © 2025 Texas Instruments Incorporated

6.5 Electrical Characteristics for LM324B and LM324BA

for V_S = (V+) – (V–) = 5V to 36V (±2.5V to ±18V), at T_A = 25°C, V_{CM} = V_{OUT} = V_S / 2, and R_L = 10k connected to V_S / 2 (unless otherwise noted)

PARAMETER		TEST CONDITIONS		MIN	TYP	MAX	UNIT
OFFSET VOLTAGE							
V_{OS}	Input offset voltage	LM324B			±0.6	±3.0	mV
			T_A = –40°C to +85°C			±4.0	
		LM324BA			±0.3	±2	
			T_A = –40°C to +85°C			2.5	
dV_{OS}/dT	Input offset voltage drift	R_S = 0Ω	T_A = –40°C to +85°C		±7		μV/°C
PSRR	Input offset voltage versus power supply			65	100		dB
	Channel separation	f = 1kHz to 20kHz			120		dB
INPUT VOLTAGE RANGE							
V_{CM}	Common-mode voltage	V_S = 3V to 36V		V–		(V+) – 1.5	V
		V_S = 5V to 36V, T_A = –40°C to +85°C		V–		(V+) – 2	
CMRR	Common-mode rejection ratio	V_S = 3V to 36V, (V–) ≤ V_{CM} ≤ (V+) – 1.5V		70	80		dB
		V_S = 5V to 36V, (V–) ≤ V_{CM} ≤ (V+) – 2V, T_A = –40°C to +85°C		65	80		
INPUT BIAS CURRENT							
I_B	Input bias current				–10	–35	nA
		T_A = –40°C to +85°C				–60	
dI_{OS}/dT	Input offset current drift	T_A = –40°C to +85°C			10		pA/°C
I_{OS}	Input offset current				±0.5	±4	nA
		T_A = –40°C to +85°C				±5	
dI_{OS}/dT	Input offset current drift	T_A = –40°C to +85°C			10		pA/°C
NOISE							
E_N	Input voltage noise	f = 0.1Hz to 10Hz			3		$μV_{PP}$
e_N	Input voltage noise density	R_S = 100Ω, V_I = 0V, f = 1kHz (see Figure 6-2 for test circuit)			35		nV/√Hz
INPUT CAPACITANCE							
Z_{ID}	Differential				10 || 0.1		MΩ || pF
Z_{ICM}	Common-mode				4 || 1.5		GΩ || pF
OPEN-LOOP GAIN							
A_{OL}	Open-loop voltage gain	V_S = 15V, V_O = 1V to 11V, R_L ≥ 10kΩ, connected to (V–)		50	100		V/mV
			T_A = –40°C to +85°C	25			
FREQUENCY RESPONSE							
GBW	Gain-bandwidth product	R_L = 1MΩ, C_L = 20pF (see Figure 6-1 for test circuit)			1.2		MHz
SR	Slew rate	R_L = 1MΩ, C_L = 30pF, V_I = ±10V (see Figure 6-1 for test circuit)			0.5		V/μs
$Θ_m$	Phase margin	G = +1, R_L = 10kΩ, C_L = 20pF			56		°
t_S	Settling time	To 0.1%, V_S = 5V, 2V step, G = +1, C_L = 100pF			4		μs
	Overload recovery time	V_{IN} × gain > V_S			10		μs
THD+N	Total harmonic distortion + noise	G = +1, f = 1kHz, V_O = 3.53V_{RMS}, V_S = 36V, R_L = 100kΩ, I_{OUT} ≤ 50μA, BW = 80kHz			0.001%		

6.5 Electrical Characteristics for LM324B and LM324BA (continued)

for V_S = (V+) – (V–) = 5V to 36V (±2.5V to ±18V), at T_A = 25°C, V_{CM} = V_{OUT} = V_S / 2, and R_L = 10k connected to V_S / 2 (unless otherwise noted)

PARAMETER		TEST CONDITIONS			MIN	TYP	MAX	UNIT
OUTPUT								
V_O	Voltage output swing from rail	Positive rail (V+)		I_{OUT} = –50µA		1.35	1.5	V
				I_{OUT} = –1mA		1.4	1.6	
				I_{OUT} = –5mA		1.5	1.75	
		Negative rail (V–)	I_{OUT} = 50µA			100	150	mV
			I_{OUT} = 1mA			0.75	1	V
			V_S = 5V, R_L ≤ 10kΩ connected to (V–), T_A = –40°C to +85°C			5	20	mV
I_O	Output current	Source, V_S = 15V, V_O = V–, V_{ID} = 1V			–20[(1)]	–30		mA
				T_A = –40°C to +85°C	–10[(1)]			
		Sink, V_S = 15V, V_O = V+, V_{ID} = –1V			10[(1)]	20		
				T_A = –40°C to +85°C	5[(1)]			
		V_{ID} = –1V, V_O = (V–) + 200mV			50	85		µA
I_{SC}	Short-circuit current	V_S = 20V, (V+) = 10V, (V–) = –10V, V_O = 0V				±40	±60	mA
C_{LOAD}	Capacitive load drive					100		pF
R_O	Open-loop output impedance	f = 1MHz, I_O = 0A				300		Ω
POWER SUPPLY								
I_Q	Quiescent current per amplifier	V_S = 5V, I_O = 0A, T_A = –40°C to +85°C				240	300	µA
		V_S = 36V, I_O = 0A, T_A = –40°C to +85°C				350	750	

(1) Specified by design and characterization only.

Copyright © 2025 Texas Instruments Incorporated

6.6 Electrical Characteristics for LM2902B and LM2902BA

for V_S = (V+) – (V–) = 5V to 36V (±2.5V to ±18V), at T_A = 25°C, V_{CM} = V_{OUT} = V_S / 2, and R_L = 10k connected to V_S / 2 (unless otherwise noted)

PARAMETER		TEST CONDITIONS		MIN	TYP	MAX	UNIT
OFFSET VOLTAGE							
V_{OS}	Input offset voltage	LM2902B			±0.6	±3.0	mV
			T_A = –40°C to +125°C			±4.0	
		LM2902BA			±0.3	±2	
			T_A = –40°C to +125°C			2.5	
dV_{OS}/dT	Input offset voltage drift	R_S = 0Ω, T_A = –40°C to +125°C			±7		μV/°C
PSRR	Input offset voltage versus power supply			65	100		dB
	Channel separation	f = 1kHz to 20kHz			120		dB
INPUT VOLTAGE RANGE							
V_{CM}	Common-mode voltage range	V_S = 3V to 36V		V–		(V+) – 1.5	V
		V_S = 5V to 36V, T_A = –40°C to +125°C		V–		(V+) – 2	
CMRR	Common-mode rejection ratio	V_S = 3V to 36V, (V–) ≤ V_{CM} ≤ (V+) – 1.5V		70	80		dB
		V_S = 5V to 36V, (V–) ≤ V_{CM} ≤ (V+) – 2V, T_A = –40°C to +125°C		65	80		
INPUT BIAS CURRENT							
I_B	Input bias current				–10	–35	nA
		T_A = –40°C to +125°C				–60	
dI_{OS}/dT	Input offset current drift	T_A = –40°C to +125°C			10		pA/°C
I_{OS}	Input offset current				±0.5	±4	nA
		T_A = –40°C to +125°C				±5	
dI_{OS}/dT	Input offset current drift	T_A = –40°C to +125°C			10		pA/°C
NOISE							
E_N	Input voltage noise	f = 0.1Hz to 10Hz			3		$μV_{PP}$
e_N	Input voltage noise density	R_S = 100Ω, V_I = 0V, f = 1kHz (see Figure 6-2 for test circuit)			35		nV/√Hz
INPUT CAPACITANCE							
Z_{ID}	Differential				10 || 0.1		MΩ || pF
Z_{ICM}	Common-mode				4 || 1.5		GΩ || pF
OPEN-LOOP GAIN							
A_{OL}	Open-loop voltage gain	V_S = 15V, V_O = 1V to 11V, R_L ≥ 10kΩ, connected to (V–)		50	100		V/mV
			T_A = –40°C to +125°C	25			
FREQUENCY RESPONSE							
GBW	Gain-bandwidth product	R_L = 1MΩ, C_L = 20pF (see Figure 6-1 for test circuit)			1.2		MHz
SR	Slew rate	R_L = 1MΩ, C_L = 30pF, V_I = ±10V (see Figure 6-1 for test circuit)			0.5		V/μs
$Θ_m$	Phase margin	G = +1, R_L = 10kΩ, C_L = 20pF			56		°
t_S	Settling time	To 0.1%, V_S = 5V, 2V step , G = +1, C_L = 100pF			4		μs
	Overload recovery time	V_{IN} × gain > V_S			10		μs
THD+N	Total harmonic distortion + noise	G = +1, f = 1kHz, V_O = 3.53V_{RMS}, V_S = 36V, R_L = 100k, I_{OUT} ≤ 50μA, BW = 80kHz			0.001%		

6.6 Electrical Characteristics for LM2902B and LM2902BA (continued)

for V_S = (V+) – (V–) = 5V to 36V (±2.5V to ±18V), at T_A = 25°C, V_{CM} = V_{OUT} = V_S / 2, and R_L = 10k connected to V_S / 2 (unless otherwise noted)

PARAMETER		TEST CONDITIONS		MIN	TYP	MAX	UNIT
OUTPUT							
V_O	Voltage output swing from rail	Positive Rail (V+)	I_{OUT} = –50µA		1.35	1.5	V
			I_{OUT} = –1mA		1.4	1.6	
			I_{OUT} = –5mA		1.5	1.75	
		Negative Rail (V–)	I_{OUT} = 50µA		100	150	mV
			I_{OUT} = 1mA		0.75	1	V
			V_S = 5V, R_L ≤ 10kΩ connected to (V–), T_A = –40°C to +125°C		5	20	mV
I_O	Output current	Source, V_S = 15V, V_O = V–, V_{ID} = 1V		–20[(1)]	–30		mA
			T_A = –40°C to +125°C	–10[(1)]			
		Sink, V_S = 15V, V_O = V+, V_{ID} = –1V		10[(1)]	20		
			T_A = –40°C to +125°C	5[(1)]			
		V_{ID} = –1V, V_O = (V–) + 200mV		50	85		µA
I_{SC}	Short-circuit current	V_S = 20V, (V+) = 10V, (V–) = –10V, V_O = 0V			±40	±60	mA
C_{LOAD}	Capacitive load drive				100		pF
R_O	Open-loop output impedance	f = 1MHz, I_O = 0A			300		Ω
POWER SUPPLY							
I_Q	Quiescent current per amplifier	V_S = 5V, I_O = 0A, T_A = –40°C to +125°C			240	300	µA
		V_S = 36V, I_O = 0A, T_A = –40°C to +125°C				750	

(1) Specified by design and characterization only.

Copyright © 2025 Texas Instruments Incorporated

6.7 Electrical Characteristics for LM324, LM324K, LM224, LM224K, and LM124

at specified free-air temperature, V_{CC} = 5V (unless otherwise noted)

PARAMETER		TEST CONDITIONS[1]		T_A [2]	LM124, LM224, LM224K			LM324, LM324K			UNIT
					MIN	TYP[3]	MAX	MIN	TYP[3]	MAX	
V_{IO}	Input offset voltage	V_{CC} = 5V to MAX, V_{IC} = V_{ICR}min, V_O = 1.4V		25°C		3	5		3	7	mV
				Full range			7			9	
I_{IO}	Input offset current	V_O = 1.4V		25°C		2	30		2	50	nA
				Full range			100			150	
I_{IB}	Input bias current	V_O = 1.4V		25°C		–20	–150		–20	–250	nA
				Full range			–300			–500	
V_{ICR}	Common-mode input voltage range	V_{CC} = 5V to MAX		25°C	0 to V_{CC} – 1.5			0 to V_{CC} – 1.5			V
				Full range	0 to V_{CC} – 2			0 to V_{CC} – 2			
V_{OH}	High-level output voltage	R_L = 2kΩ		25°C	V_{CC} – 1.5			V_{CC} – 1.5			V
		V_{CC} = MAX	R_L = 2kΩ	Full range	26			26			
			R_L ≥ 10kΩ	Full range	27	28		27	28		
V_{OL}	Low-level output voltage	R_L ≤ 10kΩ		Full range		5	20		5	20	mV
A_{VD}	Large-signal differential voltage amplification	V_{CC+} = 15V, V_O = 1V to 11V, R_L ≥ 2kΩ		25°C	50	100		25	100		V/mV
				Full range	25			15			
CMRR	Common-mode rejection ratio	V_{IC} = V_{ICR}min		25°C	70	80		65	80		dB
k_{SVR}	Supply-voltage rejection ratio (ΔV_{CC} /ΔVIO)			25°C	65	100		65	100		dB
V_{O1}/ V_{O2}	Crosstalk attenuation	f = 1kHz to 20kHz		25°C		120			120		dB
I_O	Output current	Source, V_{CC} = 15V, V_{ID} = 1V, V_O = 0V		25°C	–20	–30	–60	–20	–30	–60	mA
				Full range	–10			–10			
		V_{CC} = 15V, V_{ID} = –1V, V_O = 15V		25°C	10	20		10	20		
				Full range	5			5			
		V_{ID} = –1V, V_O = 200mV		25°C	12	30		12	30		μA
I_{OS}	Short-circuit output current	V_{CC} at 5V, V_O = 0V, $V_{CC–}$ at –5V		25°C		±40	±60		±40	±60	mA
I_{CC}	Supply current (four amplifiers)	V_O = 2.5V, no load		Full range		0.7	1.2		0.7	1.2	mA
		V_{CC} = MAX, V_O = 0.5V_{CC}, no load		Full range		1.4	3		1.4	3	

(1) All characteristics are measured under open-loop conditions, with zero common-mode input voltage, unless otherwise specified. MAX V_{CC} for testing purposes is 26V for LM2902 and 30V for the others.
(2) Full range is –55°C to +125°C for LM124, –25°C to +85°C for LM224, and 0°C to 70°C for LM324.
(3) All typical values are at T_A = 25°C.

Copyright © 2025 Texas Instruments Incorporated

6.8 Electrical Characteristics for LM2902, LM2902K, LM2902KV and LM2902KAV

at specified free-air temperature, V_{CC} = 5V (unless otherwise noted)

PARAMETER		TEST CONDITIONS[1]		T_A [2]	LM2902, LM2902K			LM2902KV, LM2902KAV			UNIT
					MIN	TYP[3]	MAX	MIN	TYP[3]	MAX	
V_{IO}	Input offset voltage	V_{CC} = 5V to MAX, V_{IC} = V_{ICR}min, V_O = 1.4V	Non-A-suffix devices	25°C		3	7		3	7	mV
				Full range			10			10	
			A-suffix devices	25°C					1	2	
				Full range						4	
$\Delta V_{IO}/\Delta T$	Input offset voltage temperature drift	R_S = 0Ω		Full range					7		μV/°C
I_{IO}	Input offset current	V_O = 1.4V		25°C		2	50		2	50	nA
				Full range			300			150	
$\Delta I_{IO}/\Delta T$	Input offset voltage temperature drift			Full range					10		pA/°C
I_{IB}	Input bias current	V_O = 1.4V		25°C		–20	–250		–20	–250	nA
				Full range			–500			–500	
V_{ICR}	Common-mode input voltage range	V_{CC} = 5V to MAX		25°C	0 to V_{CC} – 1.5			0 to V_{CC} – 1.5			V
				Full range	0 to V_{CC} – 2			0 to V_{CC} – 2			
V_{OH}	High-level output voltage	R_L = 10kΩ		25°C	V_{CC} – 1.5			V_{CC} – 1.5			V
		V_{CC} = MAX	R_L = 2kΩ	Full range	22			26			
			R_L ≥ 10kΩ	Full range	23	24		27			
V_{OL}	Low-level output voltage	R_L ≤ 10kΩ		Full range		5	20		5	20	mV
A_{VD}	Large-signal differential voltage amplification	V_{CC} = 15V, V_O = 1V to 11V, R_L ≥ 2kΩ		25°C	25	100		25	100		V/mV
				Full range	15			15			
CMRR	Common-mode rejection ratio	V_{IC} = V_{ICR}min		25°C	50	80		60	80		dB
k_{SVR}	Supply-voltage rejection ratio (ΔV_{CC} /ΔVIO)			25°C	50	100		60	100		dB
V_{O1}/ V_{O2}	Crosstalk attenuation	f = 1kHz to 20kHz		25°C		120			120		dB
I_O	Output current	Source, V_{CC} = 15V, V_{ID} = 1V, V_O = 0V		25°C	–20	–30	–60	–20	–30	–60	mA
				Full range	–10			–10			
		Sink, V_{CC} = 15V, V_{ID} = –1V, V_O = 15V		25°C	10	20		10	20		
				Full range	5			5			
		V_{ID} = –1V, V_O = 200mV		25°C		30		12	40		μA
I_{OS}	Short-circuit output current	V_{CC} at 5V, V_O = 0V, V_{CC-} at –5V		25°C		±40	±60		±40	±60	mA
I_{CC}	Supply current (four amplifiers)	V_O = 2.5V, no load		Full range		0.7	1.2		0.7	1.2	mA
		V_{CC} = MAX, V_O = 0.5V_{CC}, no load		Full range		1.4	3		1.4	3	

(1) All characteristics are measured under open-loop conditions, with zero common-mode input voltage, unless otherwise specified. MAX V_{CC} for testing purposes is 26V for LM2902 and 32V for LM2902V.
(2) Full range is –40°C to +125°C for LM2902.
(3) All typical values are at T_A = 25°C.

Copyright © 2025 Texas Instruments Incorporated

6.9 Electrical Characteristics for LM324A, LM324KA, LM224A, LM224KA, and LM124A

at specified free-air temperature, V_{CC} = 5V (unless otherwise noted)

PARAMETER		TEST CONDITIONS[1]		T_A [2]	LM124A			LM224A, LM224KA			LM324A, LM324KA			UNIT
					MIN	TYP[3]	MAX	MIN	TYP[3]	MAX	MIN	TYP[3]	MAX	
V_{IO}	Input offset voltage	V_{CC} = 5V to 30V, V_{IC} = V_{ICR}min, V_O = 1.4V		25°C			2		2	3		2	3	mV
				Full range			4			4			5	
I_{IO}	Input offset current	V_O = 1.4V		25°C			10		2	15		2	30	nA
				Full range			30			30			75	
I_{IB}	Input bias current	V_O = 1.4V		25°C			–50		–15	–80		–15	–100	nA
				Full range			–100			–100			–200	
V_{ICR}	Common-mode input voltage range	V_{CC} = 30V		25°C	0 to V_{CC} – 1.5			0 to V_{CC} – 1.5			0 to V_{CC} – 1.5			V
				Full range	0 to V_{CC} – 2			0 to V_{CC} – 2			0 to V_{CC} – 2			
V_{OH}	High-level output voltage	R_L = 2kΩ		25°C	V_{CC} – 1.5			V_{CC} – 1.5			V_{CC} – 1.5			V
		V_{CC} = 30V	R_L= 2kΩ	Full range	26			26			26			
			R_L≥ 10kΩ	Full range	27			27	28		27	28		
V_{OL}	Low-level output voltage	R_L ≤ 10kΩ		Full range			20		5	20		5	20	mV
A_{VD}	Large-signal differential voltage amplification	V_{CC} = 15V, V_O = 1V to 11V, R_L ≥ 2kΩ		25°C	50	100		50	100		25	100		V/mV
				Full range	25			25			15			
CMRR	Common-mode rejection ratio	V_{IC} = V_{ICR}min		25°C	70			70	80		65	80		dB
k_{SVR}	Supply-voltage rejection ratio (ΔV_{CC} /ΔV_{IO})			25°C	65			65	100		65	100		dB
V_{O1}/ V_{O2}	Crosstalk attenuation	f = 1kHz to 20kHz		25°C		120			120			120		dB
I_O	Output current	Source, V_{CC} = 15V, V_{ID} = 1V, V_O = 0V		25°C	–20			–20	–30	–60	–20	–30	–60	mA
				Full range	–10			–10			–10			
		Sink, V_{CC} = 15V, V_{ID} = –1V, V_O = 15V		25°C	10			10	20		1	20		
				Full range	5			5			5			
		V_{ID} = −1V, V_O = 200mV		25°C	12			12	30		12	30		µA
I_{OS}	Short-circuit output current	V_{CC} at 5V, V_{CC-} at –5V, V_O = 0V		25°C		±40	±60		±40	±60		±40	±60	mA
I_{CC}	Supply current (four amplifiers)	V_O = 2.5V, no load		Full range		0.7	1.2		0.7	1.2		0.7	1.2	mA
		V_{CC} = 30V, V_O = 15V, no load		Full range		1.4	3.		1.4	3		1.4	3	

(1) All characteristics are measured under open-loop conditions, with zero common-mode input voltage, unless otherwise specified.
(2) Full range is –55°C to +125°C for LM124A, –25°C to +85°C for LM224A, and 0°C to 70°C for LM324A.
(3) All typical values are at T_A = 25°C.

6.10 Operating Conditions

at V_{CC} = ±15V and T_A = 25°C (unless otherwise noted)

PARAMETER		TEST CONDITIONS	MIN	TYP	MAX	UNIT
SR	Slew rate at unity gain	R_L = 1MΩ, C_L = 30pF, V_I = ±10V (see Figure 7-1)		0.5		V/µs
B_1	Unity-gain bandwidth	R_L = 1MΩ, C_L = 20pF (see Figure 7-1)		1.2		MHz
V_n	Equivalent input noise voltage	R_S = 100Ω, V_I = 0V, f = 1kHz (see Figure 7-2)		35		nV/√Hz

Copyright © 2025 Texas Instruments Incorporated

6.11 Typical Characteristics: LM324B and LM2902B

at T_A = 25°C, V_S = 36V (±18V), V_{CM} = V_S / 2, and R_{LOAD} = 10kΩ connected to V_S / 2 (unless otherwise noted)

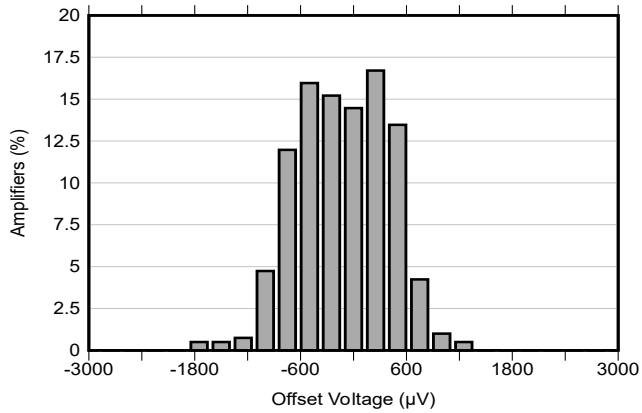

Figure 6-1. Offset Voltage Production Distribution

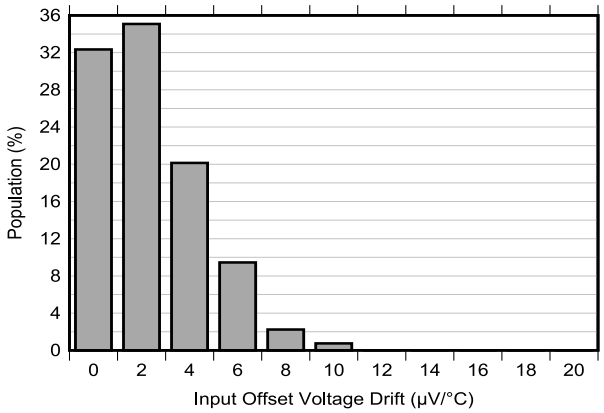

Figure 6-2. Offset Voltage Drift Distribution

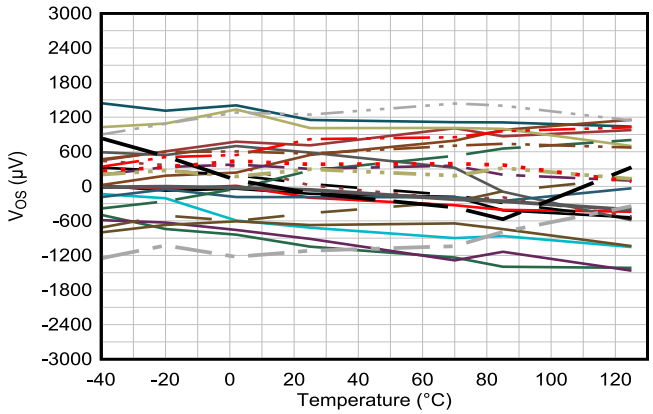

Figure 6-3. Offset Voltage vs Temperature

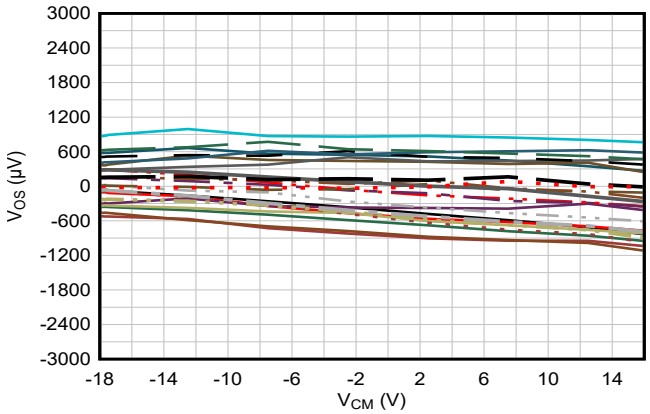

Figure 6-4. Offset Voltage vs Common-Mode Voltage

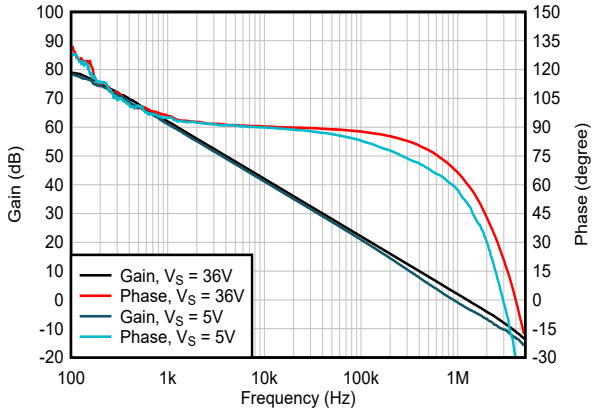

Figure 6-5. Open-Loop Gain and Phase vs Frequency

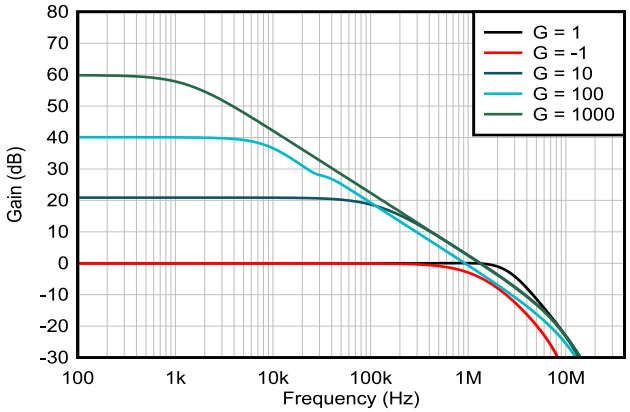

Figure 6-6. Closed-Loop Gain vs Frequency

Copyright © 2025 Texas Instruments Incorporated

6.11 Typical Characteristics: LM324B and LM2902B (continued)

at T_A = 25°C, V_S = 36V (±18V), V_{CM} = V_S / 2, and R_{LOAD} = 10kΩ connected to V_S / 2 (unless otherwise noted)

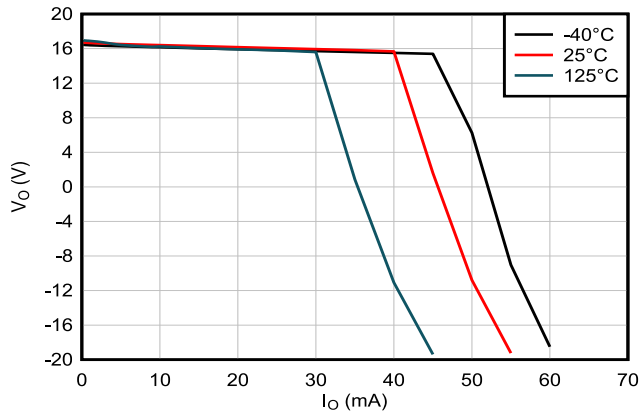

Figure 6-7. Output Voltage Swing vs Output Current (Sourcing)

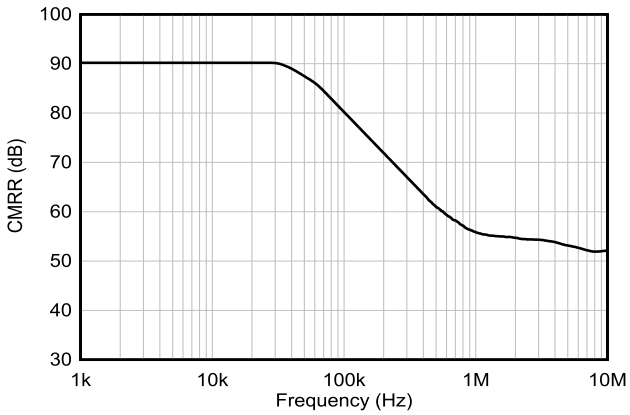

Figure 6-8. CMRR vs Frequency

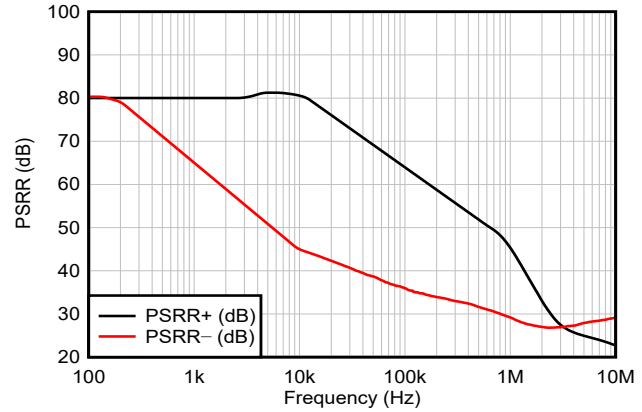

Figure 6-9. PSRR vs Frequency

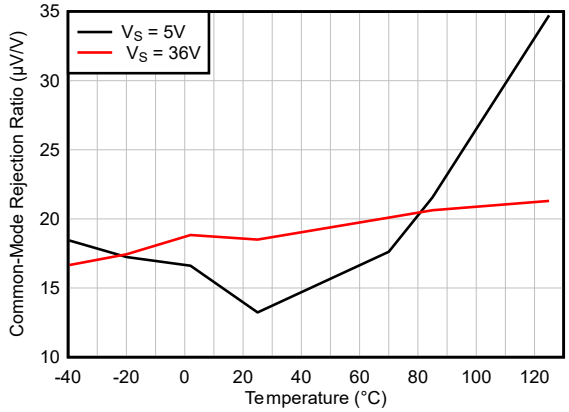

Figure 6-10. Common-Mode Rejection Ratio vs Temperature

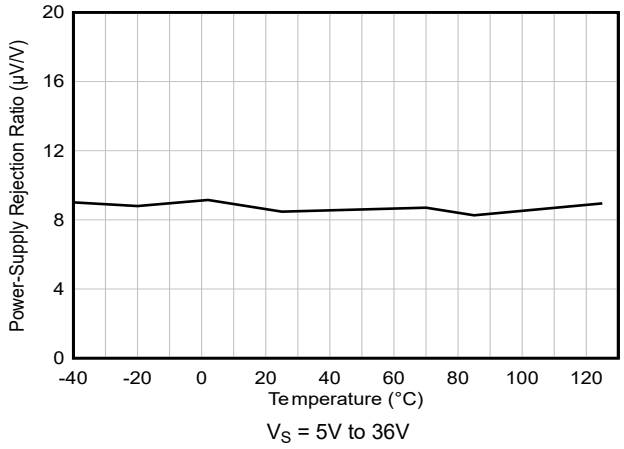

Figure 6-11. Power Supply Rejection Ratio vs Temperature

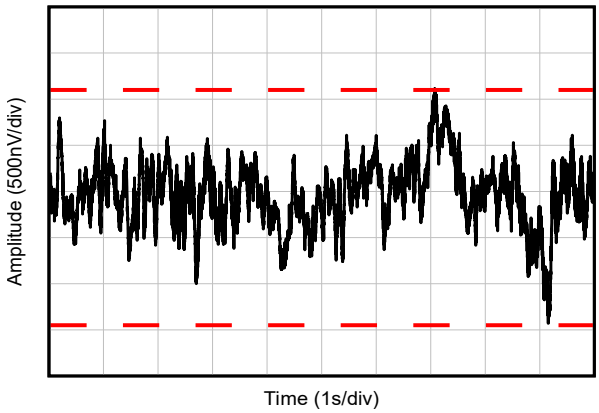

Figure 6-12. 0.1Hz to 10Hz Noise

6.11 Typical Characteristics: LM324B and LM2902B (continued)

at T_A = 25°C, V_S = 36V (±18V), V_{CM} = V_S / 2, and R_{LOAD} = 10kΩ connected to V_S / 2 (unless otherwise noted)

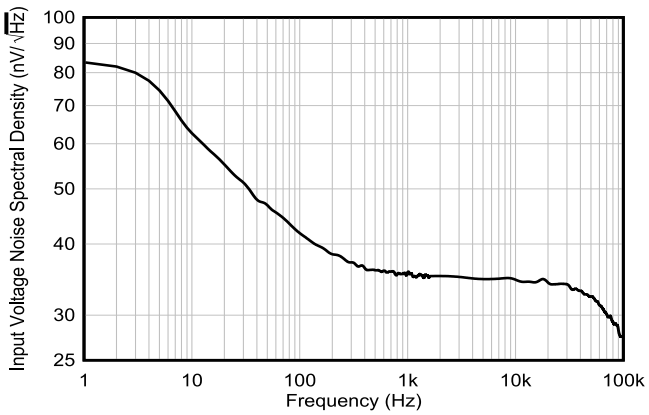

Figure 6-13. Input Voltage Noise Spectral Density vs Frequency

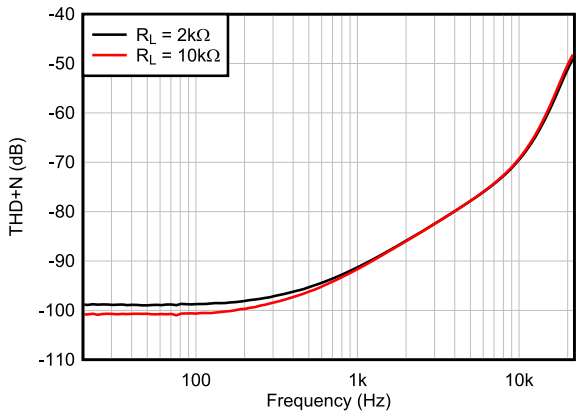

G = 1, f = 1kHz, BW = 80kHz,
V_{OUT} = 10V_{PP}, R_L connected to V–

Figure 6-14. THD+N Ratio vs Frequency, G = 1

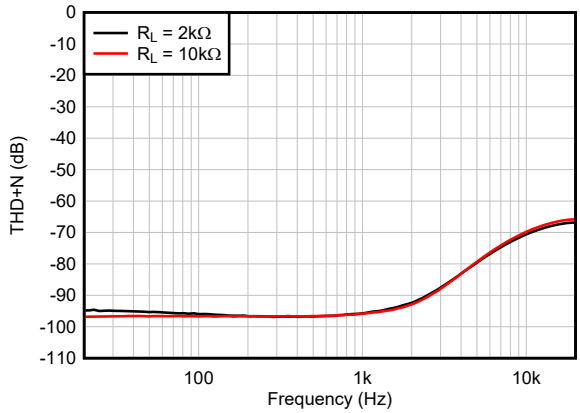

G = –1, f = 1kHz, BW = 80kHz,
V_{OUT} = 10V_{PP}, R_L connected to V–, see Section 7

Figure 6-15. THD+N Ratio vs Frequency, G = –1

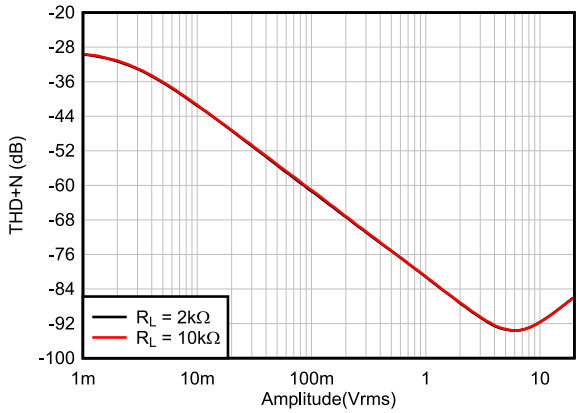

G = 1, f = 1kHz, BW = 80kHz,
R_L connected to V–

Figure 6-16. THD+N vs Output Amplitude, G = 1

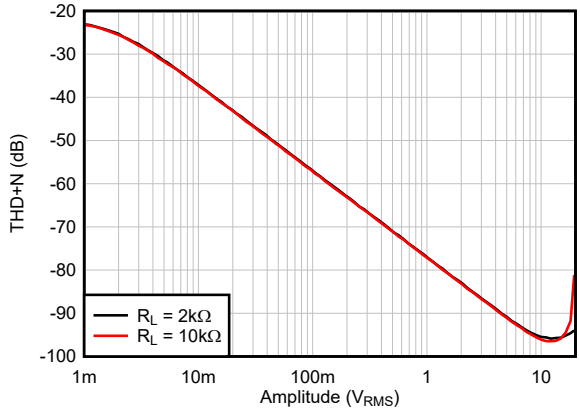

G = –1, f = 1kHz, BW = 80kHz,
R_L connected to V–, see Section 7

Figure 6-17. THD+N vs Output Amplitude, G = –1

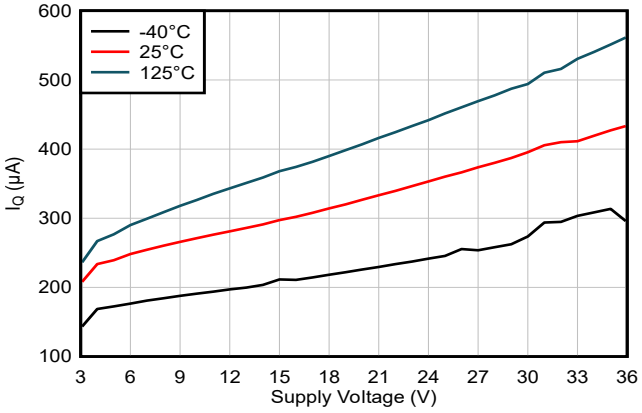

Figure 6-18. Quiescent Current vs Supply Voltage

Copyright © 2025 Texas Instruments Incorporated

6.11 Typical Characteristics: LM324B and LM2902B (continued)

at T_A = 25°C, V_S = 36V (±18V), V_{CM} = V_S / 2, and R_{LOAD} = 10kΩ connected to V_S / 2 (unless otherwise noted)

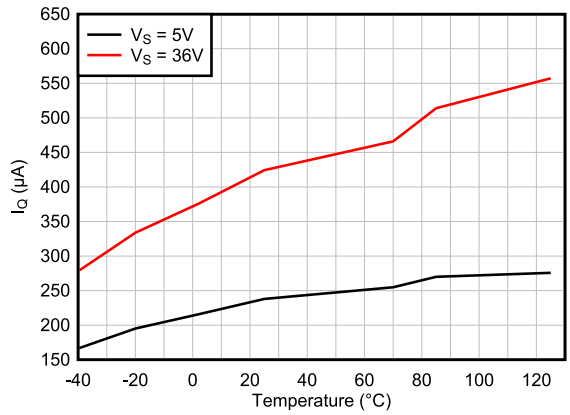

Figure 6-19. Quiescent Current vs Temperature

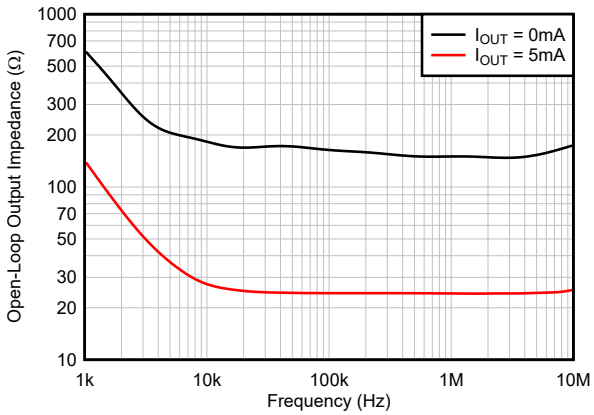

Figure 6-20. Open-Loop Output Impedance vs Frequency

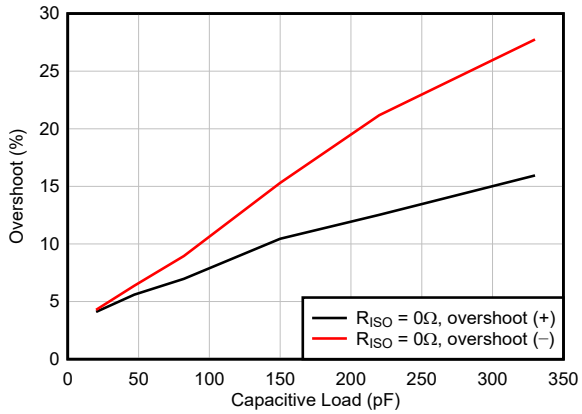

G = 1, 100mV output step, R_L = open

Figure 6-21. Small-Signal Overshoot vs Capacitive Load

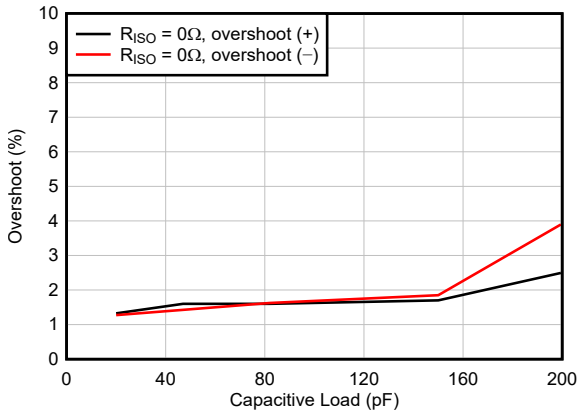

G = –1, 100mV output step, R_L = open

Figure 6-22. Small-Signal Overshoot vs Capacitive Load

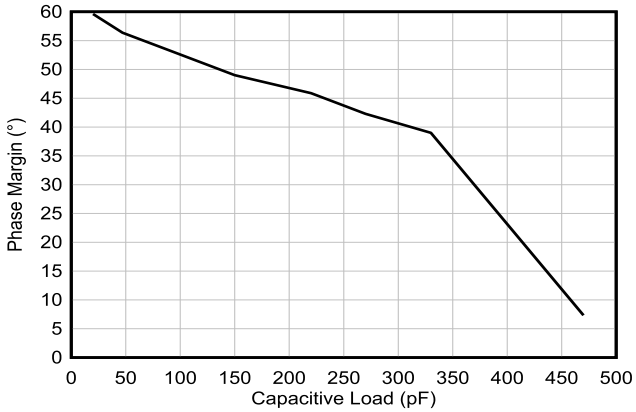

G = +1, R_L = 10kΩ, C_L = 20pF

Figure 6-23. Phase Margin vs Capacitive Load

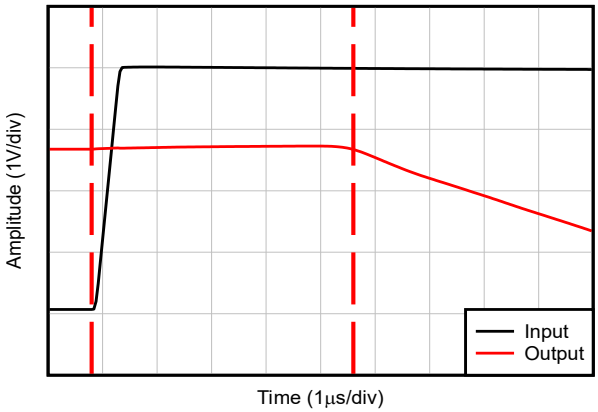

G = –10

Figure 6-24. Overload Recovery (Positive Rail)

6.11 Typical Characteristics: LM324B and LM2902B (continued)

at T_A = 25°C, V_S = 36V (±18V), V_{CM} = V_S / 2, and R_{LOAD} = 10kΩ connected to V_S / 2 (unless otherwise noted)

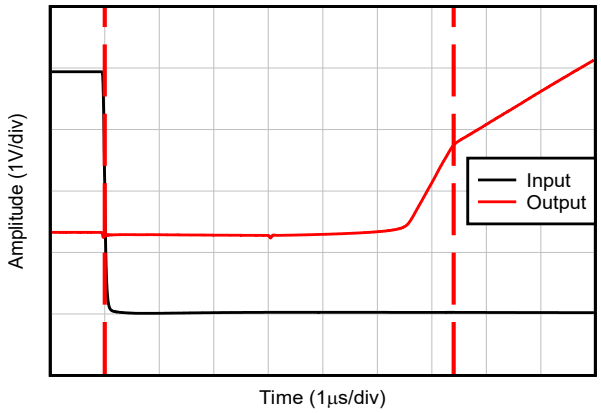

G = –10

Figure 6-25. Overload Recovery (Negative Rail)

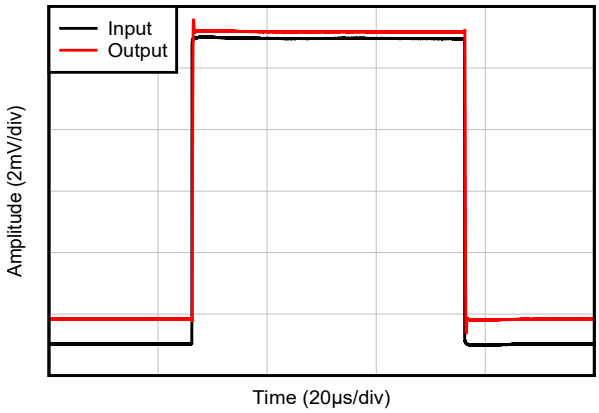

G = 1, R_L = open

Figure 6-26. Small-Signal Step Response, G = 1

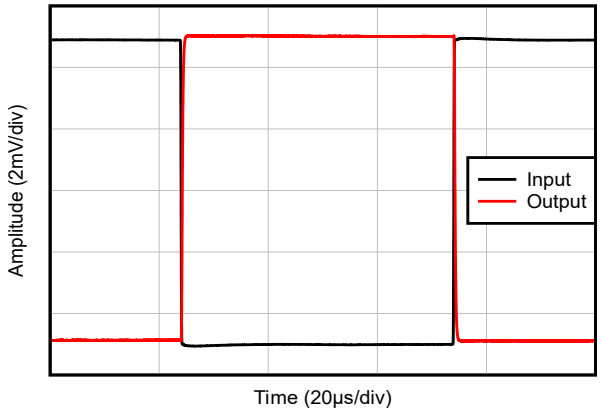

G = –1, R_L = open, R_{FB} = 10kΩ

See Section 7

Figure 6-27. Small-Signal Step Response, G = –1

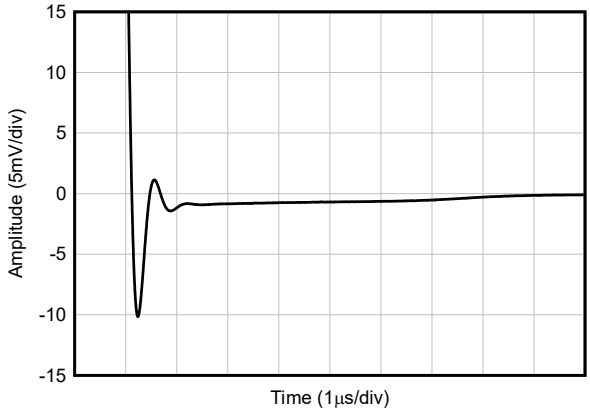

G = 1, R_L = open

Figure 6-28. Large-Signal Step Response (Falling)

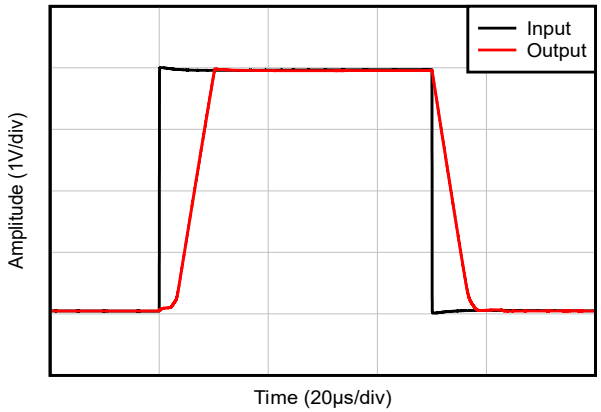

G = 1, R_L = open

Figure 6-29. Large-Signal Step Response, G = 1

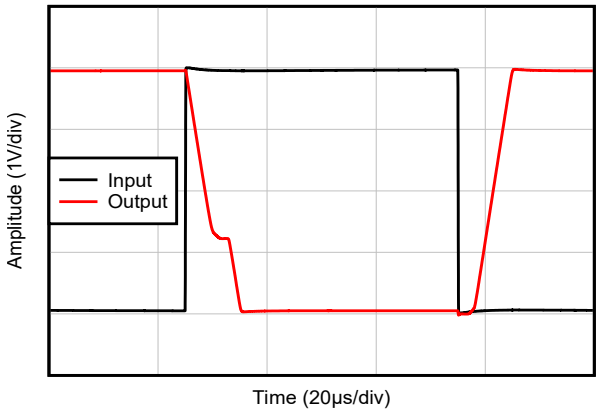

G = –1, R_L = open

Figure 6-30. Large-Signal Step Response, G = –1

Copyright © 2025 Texas Instruments Incorporated

6.11 Typical Characteristics: LM324B and LM2902B (continued)

at T_A = 25°C, V_S = 36V (±18V), V_{CM} = V_S / 2, and R_{LOAD} = 10kΩ connected to V_S / 2 (unless otherwise noted)

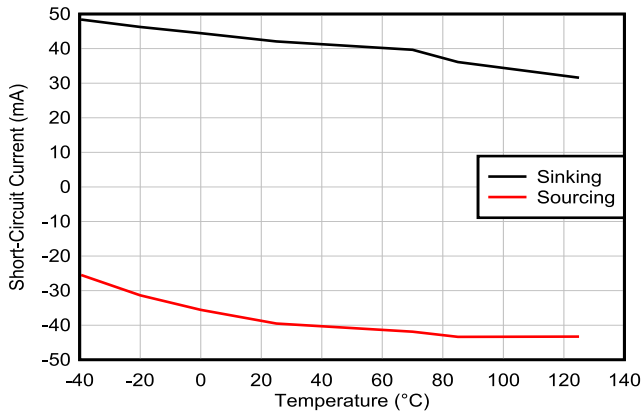

Figure 6-31. Short-Circuit Current vs Temperature

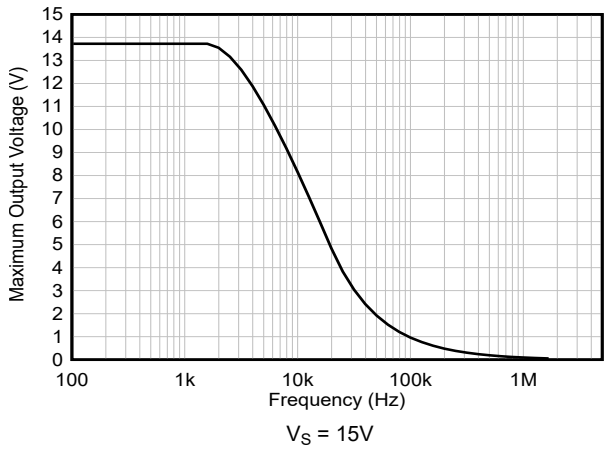

Figure 6-32. Maximum Output Voltage vs Frequency

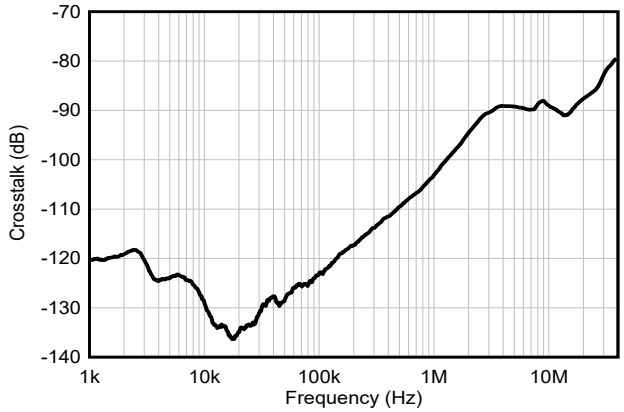

Figure 6-33. Channel Separation vs Frequency

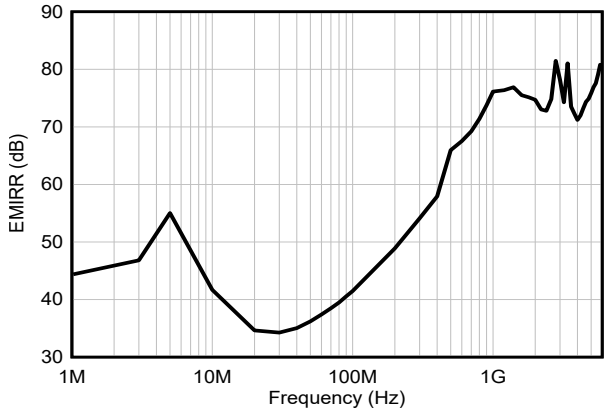

Figure 6-34. EMIRR (Electromagnetic Interference Rejection Ratio) vs Frequency

6.12 Typical Characteristics: All Devices Except B and BA Versions

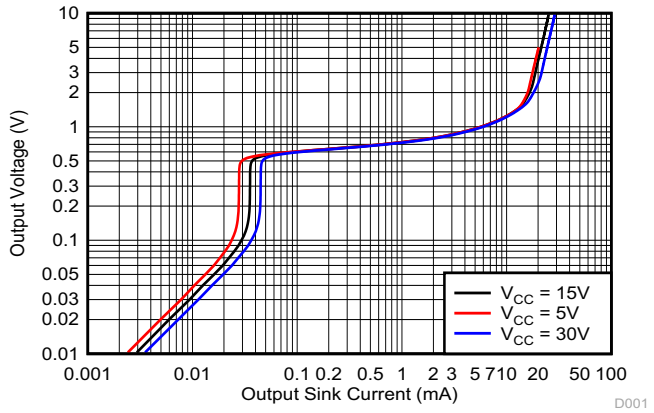

Figure 6-35. Output Sinking Characteristics

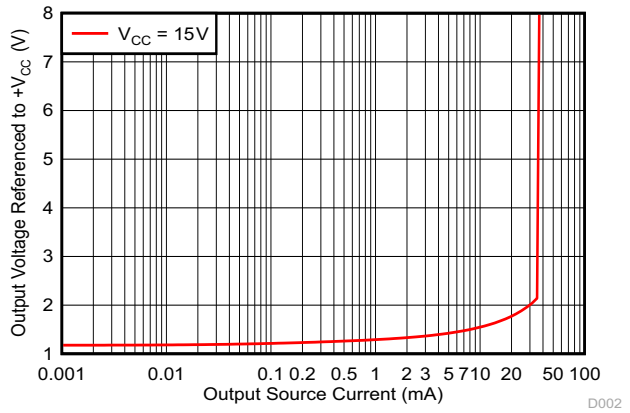

Figure 6-36. Output Sourcing Characteristics

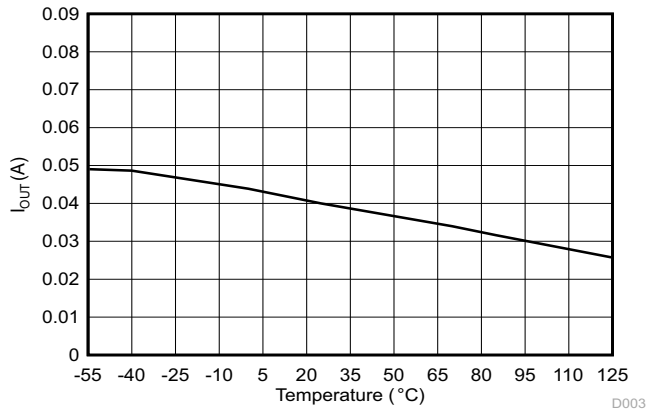

Figure 6-37. Source Current Limiting

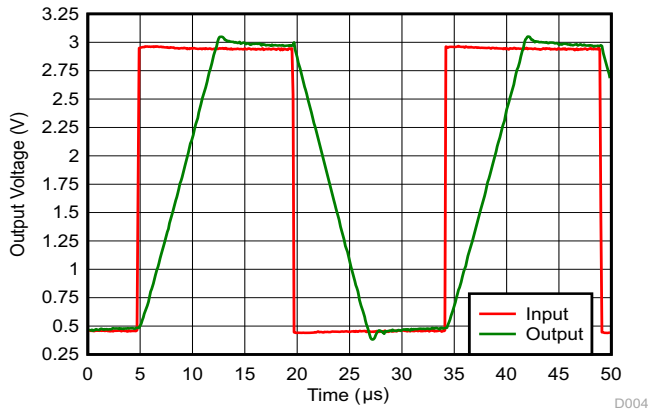

Figure 6-38. Voltage Follower Large-Signal Response (50pF)

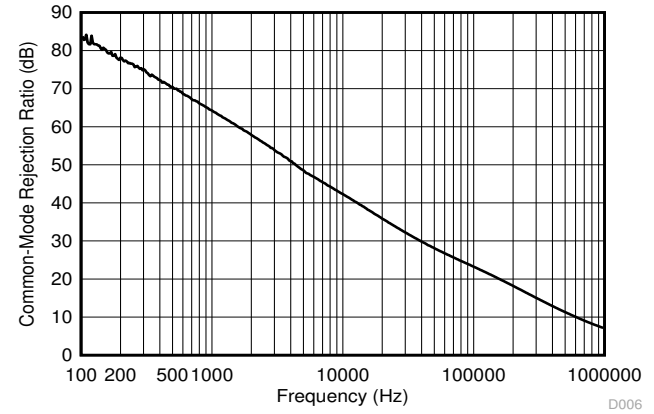

Figure 6-39. Common-Mode Rejection Ratio

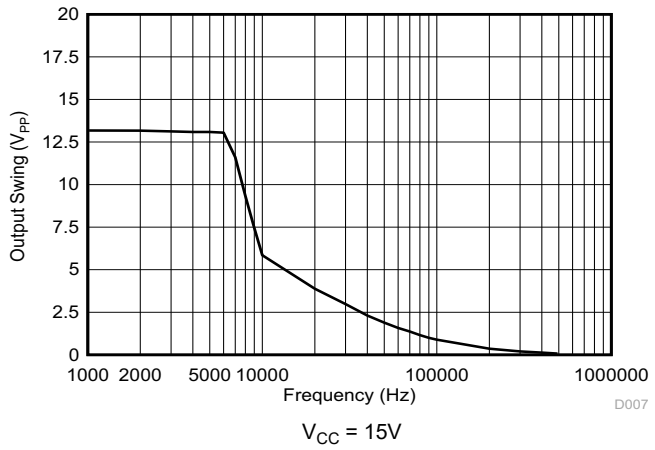

Figure 6-40. Maximum Output Swing vs Frequency

Copyright © 2025 Texas Instruments Incorporated

7 Parameter Measurement Information

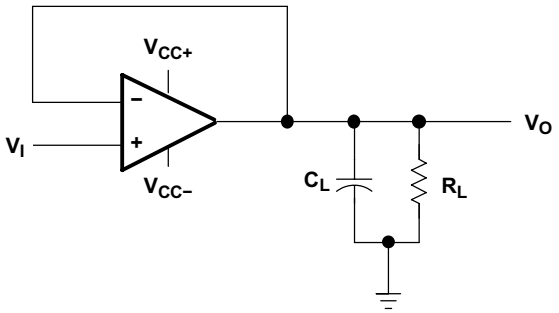

Figure 7-1. Unity-Gain Amplifier

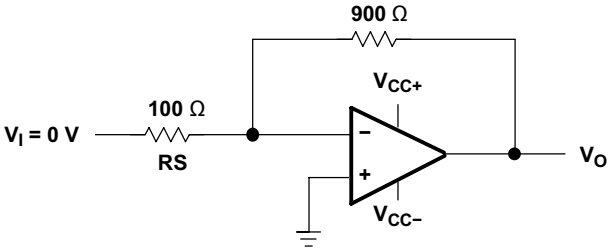

Figure 7-2. Noise-Test Circuit

8 Detailed Description

8.1 Overview

These devices consist of four independent high-gain frequency-compensated operational amplifiers that are designed specifically to operate from a single supply over a wide range of voltages. Operation from split supplies is also possible if the difference between the two supplies is 3V to 36V (B and BA versions), 3V to 26V (for LM2902 devices), or 3V to 30V (for all other devices), and V_{CC} is at least 1.5V more positive than the input common-mode voltage. The low supply-current drain is independent of the magnitude of the supply voltage.

Applications include transducer amplifiers, DC amplification blocks, and all the conventional operational-amplifier circuits that can be more easily implemented in single-supply-voltage systems. For example, the LM324B and LM2902B devices can be operated directly from the standard 5V supply that is used in digital systems and provides the required interface electronics, without requiring additional ±15V supplies.

Copyright © 2025 Texas Instruments Incorporated

8.2 Functional Block Diagram

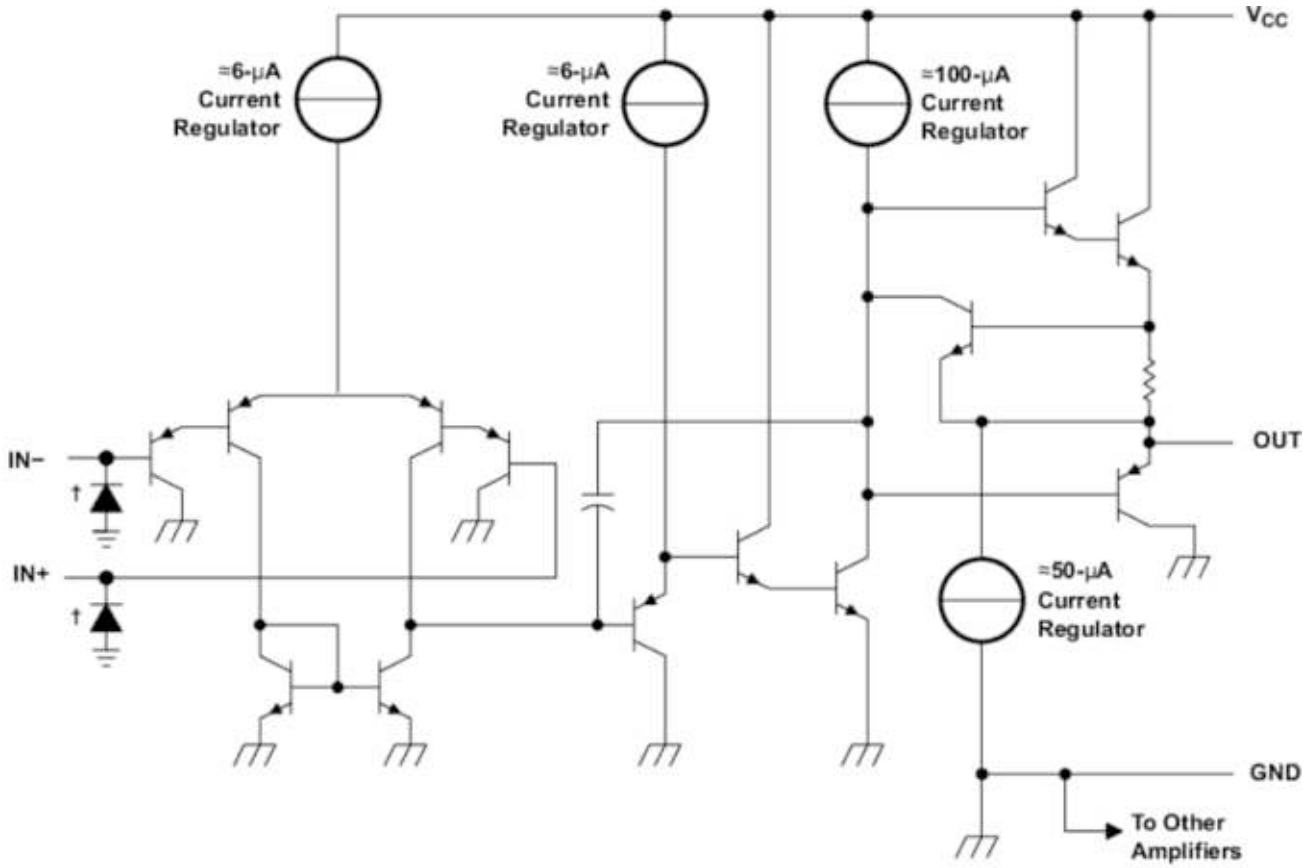

COMPONENT COUNT (total device)	
Epi-FET	1
Transistors	95
Diodes	4
Resistors	11
Capacitors	4

ESD protection cells - available on B, BA, and K versions only

Copyright © 2025 Texas Instruments Incorporated

8.3 Feature Description

8.3.1 Unity-Gain Bandwidth

To calculate the gain bandwidth product, multiply the measured bandwidth of an amplifier by the measured bandwidth gain. These devices have a high gain bandwidth of 1.2MHz.

8.3.2 Slew Rate

The slew rate is the rate at which an operational amplifier changes the output when there is a change on the input. These devices have a 0.5V/µs slew rate.

8.3.3 Input Common-Mode Voltage Range

The valid common-mode voltage range is from device ground to V_{CC} – 1.5V (V_{CC} – 2V across temperature). Inputs are able to exceed V_{CC} up to the maximum V_{CC} without device damage. Ensure that at least one input is in the valid input common-mode voltage range for the output to be in the correct phase. If both inputs exceed the valid range, then the output phase is undefined. If either input is less than –0.3V, limit the input current to 1mA, and the output phase is undefined.

8.4 Device Functional Modes

These devices are powered on when the supply is connected. This device operates as a single-supply operational amplifier or dual-supply amplifier depending on the application.

Copyright © 2025 Texas Instruments Incorporated

9 Application and Implementation

Note

Information in the following applications sections is not part of the TI component specification, and TI does not warrant its accuracy or completeness. TI's customers are responsible for determining suitability of components for their purposes, as well as validating and testing their design implementation to confirm system functionality.

9.1 Application Information

The LMx24 and LM2902 operational amplifiers are useful in a wide range of signal conditioning applications. Inputs are able to be powered before VCC for flexibility in multiple supply circuits.

9.2 Typical Application

A common application for an operational amplifier is an inverting amplifier. This amplifier takes a positive voltage on the input, and produces a negative voltage with the same magnitude. In the same manner, the amplifier also makes negative voltages positive. A linear gain can be achieved by changing the resistor ratio in the feedback path.

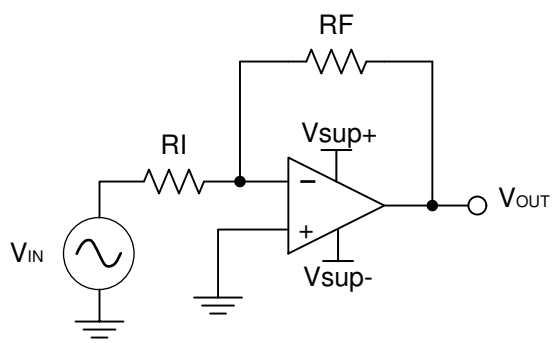

Figure 9-1. Application Schematic

9.2.1 Design Requirements

The supply voltage must be chosen such that the supply voltage is larger than the input voltage range and output range. For instance, this application scales a signal of ±0.5V to ±1.8V. Setting the supply at ±12V is sufficient to accommodate this application.

9.2.2 Detailed Design Procedure

Determine the gain required by the inverting amplifier using Equation 1 and Equation 2:

$$A_V = \frac{VOUT}{VIN} \tag{1}$$

$$A_V = \frac{1.8}{-0.5} = -3.6 \tag{2}$$

After the desired gain is determined, choose a value for RI or RF. Choosing a value in the kΩ range is desirable because the amplifier circuit uses currents in the mA range. This choice does not draw too much current. This example chooses 10kΩ for RI, which means 36kΩ is used for RF. These values are determined by Equation 3.

$$A_V = \frac{RF}{RI} \tag{3}$$

Copyright © 2025 Texas Instruments Incorporated

9.2.3 Application Curve

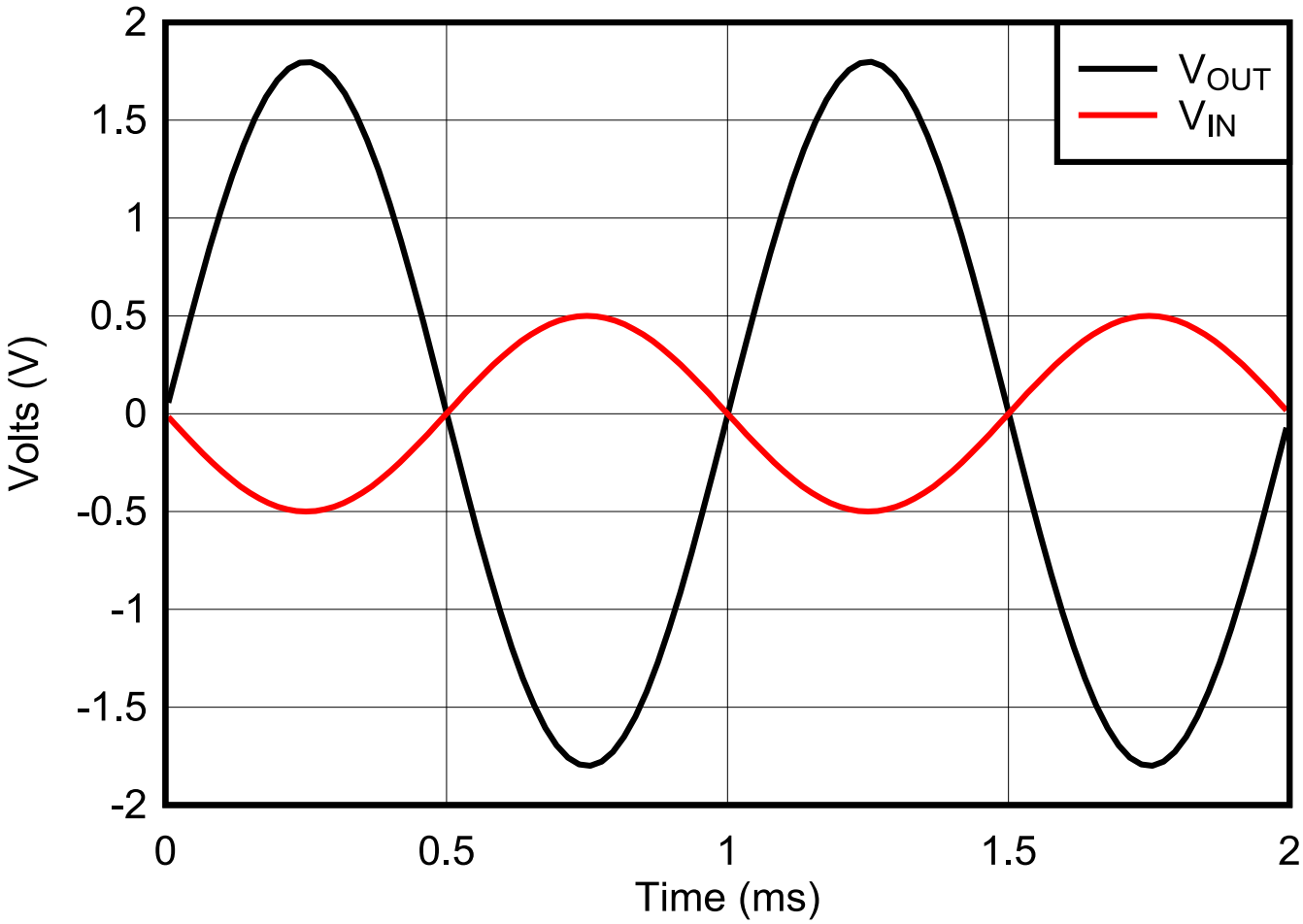

Figure 9-2. Input and Output Voltages of the Inverting Amplifier

9.3 Power Supply Recommendations

CAUTION

Supply voltages greater than 32V for a single supply, or outside the range of ±16V for a dual supply, are able to permanently damage the device. Do not exceed the absolute maximum ratings listed in Section 6.1.

Place 0.1µF bypass capacitors close to the power-supply pins to reduce errors coupling in from noisy or high-impedance power supplies. For more detailed information on bypass capacitor placement, see Section 9.4.

9.4 Layout

9.4.1 Layout Guidelines

For best operational performance of the device, use good PCB layout practices, including:

- Noise is able to propagate into analog circuitry through the power pins of the circuit as a whole, as well as the operational amplifier. Use bypass capacitors to reduce the coupled noise by providing low-impedance power sources local to the analog circuitry.
  - Connect low-ESR, 0.1µF ceramic bypass capacitors between each supply pin and ground, placed as close to the device as possible. A single bypass capacitor from V+ to ground is applicable for single supply applications.
- Separate grounding for analog and digital portions of circuitry is one of the simplest and most-effective methods of noise suppression. One or more layers on multilayer PCBs are typically devoted to ground planes. A ground plane helps distribute heat and reduces EMI noise pickup. Physically separate digital and analog grounds, paying attention to the flow of the ground current.
- To reduce parasitic coupling, run the input traces as far away from the supply or output traces as possible. If keeping the traces separate is not possible, cross the sensitive trace perpendicular as opposed to in parallel with the noisy trace.
- Place the external components as close to the device as possible. Keep RF and RG close to the inverting input to minimize parasitic capacitance (see also Section 9.4.2).
- Keep the length of input traces as short as possible. Always remember that the input traces are the most sensitive part of the circuit.
- Consider a driven, low-impedance guard ring around the critical traces. A guard ring helps significantly reduce leakage currents from nearby traces that are at different potentials.

9.4.2 Layout Examples

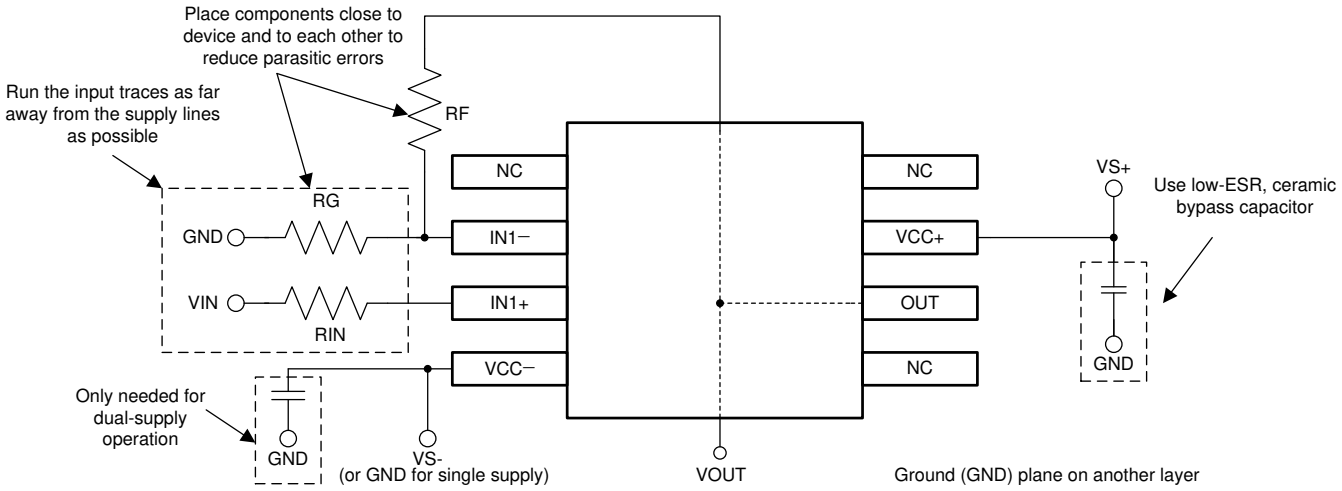

Figure 9-3. Operational Amplifier Board Layout for Noninverting Configuration

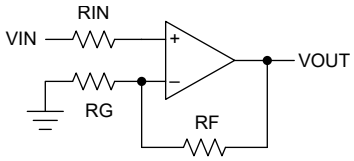

Figure 9-4. Operational Amplifier Schematic for Noninverting Configuration

Copyright © 2025 Texas Instruments Incorporated

10 Device and Documentation Support

10.1 Receiving Notification of Documentation Updates

To receive notification of documentation updates, navigate to the device product folder on ti.com. Click on *Notifications* to register and receive a weekly digest of any product information that has changed. For change details, review the revision history included in any revised document.

10.2 Support Resources

TI E2E™ support forums are an engineer's go-to source for fast, verified answers and design help — straight from the experts. Search existing answers or ask your own question to get the quick design help you need.

Linked content is provided "AS IS" by the respective contributors. They do not constitute TI specifications and do not necessarily reflect TI's views; see TI's Terms of Use.

10.3 Trademarks

TI E2E™ is a trademark of Texas Instruments.
All trademarks are the property of their respective owners.

10.4 Electrostatic Discharge Caution

This integrated circuit can be damaged by ESD. Texas Instruments recommends that all integrated circuits be handled with appropriate precautions. Failure to observe proper handling and installation procedures can cause damage.

ESD damage can range from subtle performance degradation to complete device failure. Precision integrated circuits may be more susceptible to damage because very small parametric changes could cause the device not to meet its published specifications.

10.5 Glossary

TI Glossary	This glossary lists and explains terms, acronyms, and definitions.

11 Revision History

NOTE: Page numbers for previous revisions may differ from page numbers in the current version.

Changes from Revision AD (October 2024) to Revision AE (September 2025)	Page
• Changed LM324B and LM2902B RTE (WQFN, 16) package from preview to production data (active)	1
• Added note 2 to *ESD Ratings*	5
• Changed human body model (HBM) from ±2000V to ±1000V in *ESD Ratings*	5
• Updated *Typical Application* description	24

Changes from Revision AC (March 2024) to Revision AD (October 2024)	Page
• Deleted the D (SOIC, 14) package preview note from the B and BA devices	1

Changes from Revision AB (November 2023) to Revision AC (March 2024)	Page
• Added preview note to the WQFN-16 package pinout	3
• Added LM324BIRTER and LM2902BIRTER preview information to the *Mechanical, Packaging, and Orderable Information* section	29

Changes from Revision AA (September 2023) to Revision AB (November 2023)	Page
• Changed the status of LM324BA and LM2902BA from: preview to: active	1

Copyright © 2025 Texas Instruments Incorporated

Changes from Revision Z (April 2023) to Revision AA (September 2023) **Page**

- Deleted preview note from TSSOP-14 BA devices in *Device Information* table....1
- Changed the format of the *Package Information* table to include package lead size....1

Changes from Revision Y (October 2022) to Revision Z (April 2023) **Page**

- Added WQFN-16 package in the *Package Information* table....1
- Added WQFN-16 package details to *Pin Configuration and Functions* section....3
- Added additional graphs for LM324Bx and LM2902Bx to *Typical Characteristics* 14

Changes from Revision X (May 2022) to Revision Y (October 2022) **Page**

- Deleted preview note from TSSOP-14 B devices in *Device Information* table....1
- Updated *Description* information....1
- Updated LM324B and LM324BA *Electrical Characteristics* table for RTM revision....7
- Updated LM2902B and LM2902BA *Electrical Characteriscs* table for RTM revision....9
- Added graphs for LM324Bx and LM2902Bx to *Typical Characteristics* 14

Changes from Revision W (March 2015) to Revision X (May 2022) **Page**

- Updated *Features* to include the B and BA versions....1
- Added application links to *Applications* section....1
- Corrected available packages in the *Device Information* table....1
- Added B and BA versions to *Device Information* table....1
- Updated package images in the *Pin Configuration and Functions* section to new format - no specification changes....3
- Changed GND and Vcc to Vcc- and Vcc+, respectively, in the *Pin Functions* table 3
- Added B and BA versions to *Absolute Maximum Ratings* table 5
- Added B and BA versions to *Recommended Operating Conditions* table 6
- Added the *Electrical Characteristics - LM324B and LM324BA* table 7
- Added the *Electrical Characteristics - LM2902B and LM2902BA* table....9
- Removed *Documentation Support* and *Related Links* in the *Device and Documentation Support* section....27

Changes from Revision V (January 2014) to Revision W (March 2014) **Page**

- Added *Applications* 1
- Added *Device Information* table....1
- Added *Mechanical, Packaging, and Orderable Information* section....29

Changes from Revision U (August 2010) to Revision V (January 2014) **Page**

- Updated document to new TI data sheet format - no specification changes....1
- Updated *Features* 1
- Updated *Features* 1
- Deleted *Ordering Information* table....3
- Added *Pin Functions* table 3

Copyright © 2025 Texas Instruments Incorporated

12 Mechanical, Packaging, and Orderable Information

The following pages include mechanical packaging and orderable information. This information is the most current data available for the designated devices. This data is subject to change without notice and revision of this document. For browser based versions of this data sheet, refer to the left hand navigation.

PACKAGING INFORMATION

Orderable part number	Status (1)	Material type (2)	Package | Pins	Package qty | Carrier	RoHS (3)	Lead finish/ Ball material (4)	MSL rating/ Peak reflow (5)	Op temp (°C)	Part marking (6)
77043012A	Active	Production	LCCC (FK) | 20	55 | TUBE	No	SNPB	N/A for Pkg Type	-55 to 125	77043012A LM124FKB
7704301CA	Active	Production	CDIP (J) | 14	25 | TUBE	No	SNPB	N/A for Pkg Type	-55 to 125	7704301CA LM124JB
7704301DA	Active	Production	CFP (W) | 14	25 | TUBE	No	SNPB	N/A for Pkg Type	-55 to 125	7704301DA LM124WB
77043022A	Active	Production	LCCC (FK) | 20	55 | TUBE	No	SNPB	N/A for Pkg Type	-55 to 125	77043022A LM124AFKB
7704302CA	Active	Production	CDIP (J) | 14	25 | TUBE	No	SNPB	N/A for Pkg Type	-55 to 125	7704302CA LM124AJB
7704302DA	Active	Production	CFP (W) | 14	25 | TUBE	No	SNPB	N/A for Pkg Type	-55 to 125	7704302DA LM124AWB
JM38510/11005BCA	Active	Production	CDIP (J) | 14	25 | TUBE	No	SNPB	N/A for Pkg Type	-55 to 125	JM38510 /11005BCA
JM38510/11005BCA.A	Active	Production	CDIP (J) | 14	25 | TUBE	No	SNPB	N/A for Pkg Type	-55 to 125	JM38510 /11005BCA
LM124AFKB	Active	Production	LCCC (FK) | 20	55 | TUBE	No	SNPB	N/A for Pkg Type	-55 to 125	77043022A LM124AFKB
LM124AFKB.A	Active	Production	LCCC (FK) | 20	55 | TUBE	No	SNPB	N/A for Pkg Type	-55 to 125	77043022A LM124AFKB
LM124AJ	Active	Production	CDIP (J) | 14	25 | TUBE	No	SNPB	N/A for Pkg Type	-55 to 125	LM124AJ
LM124AJ.A	Active	Production	CDIP (J) | 14	25 | TUBE	No	SNPB	N/A for Pkg Type	-55 to 125	LM124AJ
LM124AJB	Active	Production	CDIP (J) | 14	25 | TUBE	No	SNPB	N/A for Pkg Type	-55 to 125	7704302CA LM124AJB
LM124AJB.A	Active	Production	CDIP (J) | 14	25 | TUBE	No	SNPB	N/A for Pkg Type	-55 to 125	7704302CA LM124AJB
LM124AWB	Active	Production	CFP (W) | 14	25 | TUBE	No	SNPB	N/A for Pkg Type	-55 to 125	7704302DA LM124AWB
LM124AWB.A	Active	Production	CFP (W) | 14	25 | TUBE	No	SNPB	N/A for Pkg Type	-55 to 125	7704302DA LM124AWB
LM124D	Obsolete	Production	SOIC (D) | 14	-	-	Call TI	Call TI	-55 to 125	LM124
LM124DR	Active	Production	SOIC (D) | 14	2500 | LARGE T&R	Yes	NIPDAU	Level-1-260C-UNLIM	-55 to 125	LM124
LM124DR.A	Active	Production	SOIC (D) | 14	2500 | LARGE T&R	Yes	NIPDAU	Level-1-260C-UNLIM	-55 to 125	LM124

Orderable part number	Status (1)	Material type (2)	Package | Pins	Package qty | Carrier	RoHS (3)	Lead finish/ Ball material (4)	MSL rating/ Peak reflow (5)	Op temp (°C)	Part marking (6)
LM124DRG4	Active	Production	SOIC (D) | 14	2500 | LARGE T&R	Yes	NIPDAU	Level-1-260C-UNLIM	-55 to 125	LM124
LM124DRG4.A	Active	Production	SOIC (D) | 14	2500 | LARGE T&R	Yes	NIPDAU	Level-1-260C-UNLIM	-55 to 125	LM124
LM124FKB	Active	Production	LCCC (FK) | 20	55 | TUBE	No	SNPB	N/A for Pkg Type	-55 to 125	77043012A LM124FKB
LM124FKB.A	Active	Production	LCCC (FK) | 20	55 | TUBE	No	SNPB	N/A for Pkg Type	-55 to 125	77043012A LM124FKB
LM124J	Active	Production	CDIP (J) | 14	25 | TUBE	No	SNPB	N/A for Pkg Type	-55 to 125	LM124J
LM124J.A	Active	Production	CDIP (J) | 14	25 | TUBE	No	SNPB	N/A for Pkg Type	-55 to 125	LM124J
LM124JB	Active	Production	CDIP (J) | 14	25 | TUBE	No	SNPB	N/A for Pkg Type	-55 to 125	7704301CA LM124JB
LM124JB.A	Active	Production	CDIP (J) | 14	25 | TUBE	No	SNPB	N/A for Pkg Type	-55 to 125	7704301CA LM124JB
LM124W	Active	Production	CFP (W) | 14	25 | TUBE	No	SNPB	N/A for Pkg Type	-55 to 125	LM124W
LM124W.A	Active	Production	CFP (W) | 14	25 | TUBE	No	SNPB	N/A for Pkg Type	-55 to 125	LM124W
LM124WB	Active	Production	CFP (W) | 14	25 | TUBE	No	SNPB	N/A for Pkg Type	-55 to 125	7704301DA LM124WB
LM124WB.A	Active	Production	CFP (W) | 14	25 | TUBE	No	SNPB	N/A for Pkg Type	-55 to 125	7704301DA LM124WB
LM224AD	Obsolete	Production	SOIC (D) | 14	-	-	Call TI	Call TI	-25 to 85	LM224A
LM224ADR	Active	Production	SOIC (D) | 14	2500 | LARGE T&R	Yes	NIPDAU	Level-1-260C-UNLIM	-25 to 85	LM224A
LM224ADR.A	Active	Production	SOIC (D) | 14	2500 | LARGE T&R	Yes	NIPDAU	Level-1-260C-UNLIM	-25 to 85	LM224A
LM224ADRE4	Active	Production	SOIC (D) | 14	2500 | LARGE T&R	Yes	NIPDAU	Level-1-260C-UNLIM	-25 to 85	LM224A
LM224ADRG4	Active	Production	SOIC (D) | 14	2500 | LARGE T&R	Yes	NIPDAU	Level-1-260C-UNLIM	-25 to 85	LM224A
LM224ADRG4.A	Active	Production	SOIC (D) | 14	2500 | LARGE T&R	Yes	NIPDAU	Level-1-260C-UNLIM	-25 to 85	LM224A
LM224AN	Active	Production	PDIP (N) | 14	25 | TUBE	Yes	NIPDAU	N/A for Pkg Type	-25 to 85	LM224AN
LM224AN.A	Active	Production	PDIP (N) | 14	25 | TUBE	Yes	NIPDAU	N/A for Pkg Type	-25 to 85	LM224AN
LM224D	Obsolete	Production	SOIC (D) | 14	-	-	Call TI	Call TI	-25 to 85	LM224
LM224DR	Active	Production	SOIC (D) | 14	2500 | LARGE T&R	Yes	NIPDAU	Level-1-260C-UNLIM	-25 to 85	LM224
LM224DR.A	Active	Production	SOIC (D) | 14	2500 | LARGE T&R	Yes	NIPDAU	Level-1-260C-UNLIM	-25 to 85	LM224
LM224DRG3	Obsolete	Production	SOIC (D) | 14	-	-	Call TI	Call TI	-25 to 85	LM224
LM224DRG4	Active	Production	SOIC (D) | 14	2500 | LARGE T&R	Yes	NIPDAU	Level-1-260C-UNLIM	-25 to 85	LM224
LM224DRG4.A	Active	Production	SOIC (D) | 14	2500 | LARGE T&R	Yes	NIPDAU	Level-1-260C-UNLIM	-25 to 85	LM224

Orderable part number	Status (1)	Material type (2)	Package | Pins	Package qty | Carrier	RoHS (3)	Lead finish/ Ball material (4)	MSL rating/ Peak reflow (5)	Op temp (°C)	Part marking (6)
LM224KAD	Obsolete	Production	SOIC (D) | 14	-	-	Call TI	Call TI	-25 to 85	LM224KA
LM224KADR	Active	Production	SOIC (D) | 14	2500 | LARGE T&R	Yes	NIPDAU	Level-1-260C-UNLIM	-25 to 85	LM224KA
LM224KADR.A	Active	Production	SOIC (D) | 14	2500 | LARGE T&R	Yes	NIPDAU	Level-1-260C-UNLIM	-25 to 85	LM224KA
LM224KADRG4	Active	Production	SOIC (D) | 14	2500 | LARGE T&R	-	Call TI	Call TI	-25 to 85	
LM224KAN	Active	Production	PDIP (N) | 14	25 | TUBE	Yes	NIPDAU	N/A for Pkg Type	-25 to 85	LM224KAN
LM224KAN.A	Active	Production	PDIP (N) | 14	25 | TUBE	Yes	NIPDAU	N/A for Pkg Type	-25 to 85	LM224KAN
LM224KDR	Active	Production	SOIC (D) | 14	2500 | LARGE T&R	Yes	NIPDAU	Level-1-260C-UNLIM	-25 to 85	LM224K
LM224KDR.A	Active	Production	SOIC (D) | 14	2500 | LARGE T&R	Yes	NIPDAU	Level-1-260C-UNLIM	-25 to 85	LM224K
LM224KN	Active	Production	PDIP (N) | 14	25 | TUBE	Yes	NIPDAU	N/A for Pkg Type	-25 to 85	LM224KN
LM224KN.A	Active	Production	PDIP (N) | 14	25 | TUBE	Yes	NIPDAU	N/A for Pkg Type	-25 to 85	LM224KN
LM224N	Active	Production	PDIP (N) | 14	25 | TUBE	Yes	NIPDAU	N/A for Pkg Type	-25 to 85	LM224N
LM224N.A	Active	Production	PDIP (N) | 14	25 | TUBE	Yes	NIPDAU	N/A for Pkg Type	-25 to 85	LM224N
LM224NE4	Active	Production	PDIP (N) | 14	25 | TUBE	-	Call TI	Call TI	-25 to 85	
LM2902BAIDR	Active	Production	SOIC (D) | 14	3000 | LARGE T&R	Yes	NIPDAU	Level-1-260C-UNLIM	-40 to 125	LM2902BA
LM2902BAIDR.A	Active	Production	SOIC (D) | 14	3000 | LARGE T&R	Yes	NIPDAU	Level-1-260C-UNLIM	-40 to 125	LM2902BA
LM2902BAIPWR	Active	Production	TSSOP (PW) | 14	3000 | LARGE T&R	Yes	NIPDAU	Level-1-260C-UNLIM	-40 to 125	L2902BA
LM2902BAIPWR.A	Active	Production	TSSOP (PW) | 14	3000 | LARGE T&R	Yes	NIPDAU	Level-1-260C-UNLIM	-40 to 125	L2902BA
LM2902BIDR	Active	Production	SOIC (D) | 14	3000 | LARGE T&R	Yes	NIPDAU	Level-1-260C-UNLIM	-40 to 125	LM2902B
LM2902BIDR.A	Active	Production	SOIC (D) | 14	3000 | LARGE T&R	Yes	NIPDAU	Level-1-260C-UNLIM	-40 to 125	LM2902B
LM2902BIPWR	Active	Production	TSSOP (PW) | 14	3000 | LARGE T&R	Yes	NIPDAU	Level-1-260C-UNLIM	-40 to 125	LM2902B
LM2902BIPWR.A	Active	Production	TSSOP (PW) | 14	3000 | LARGE T&R	Yes	NIPDAU	Level-1-260C-UNLIM	-40 to 125	LM2902B
LM2902BIRTER	Active	Production	WQFN (RTE) | 16	5000 | LARGE T&R	Yes	NIPDAU	Level-1-260C-UNLIM	-40 to 125	L2902B
LM2902D	Obsolete	Production	SOIC (D) | 14	-	-	Call TI	Call TI	-40 to 125	LM2902
LM2902DR	Active	Production	SOIC (D) | 14	2500 | LARGE T&R	Yes	NIPDAU	Level-1-260C-UNLIM	-40 to 125	LM2902
LM2902DR.A	Active	Production	SOIC (D) | 14	2500 | LARGE T&R	Yes	NIPDAU	Level-1-260C-UNLIM	-40 to 125	LM2902
LM2902DRE4	Active	Production	SOIC (D) | 14	2500 | LARGE T&R	Yes	NIPDAU	Level-1-260C-UNLIM	-40 to 125	LM2902
LM2902DRG3	Obsolete	Production	SOIC (D) | 14	-	-	Call TI	Call TI	-40 to 125	LM2902
LM2902DRG4	Active	Production	SOIC (D) | 14	2500 | LARGE T&R	Yes	NIPDAU	Level-1-260C-UNLIM	-40 to 125	LM2902
LM2902DRG4.A	Active	Production	SOIC (D) | 14	2500 | LARGE T&R	Yes	NIPDAU	Level-1-260C-UNLIM	-40 to 125	LM2902
LM2902KAVQDR	Active	Production	SOIC (D) | 14	2500 | LARGE T&R	Yes	NIPDAU	Level-1-260C-UNLIM	-40 to 125	L2902KA
LM2902KAVQDR.A	Active	Production	SOIC (D) | 14	2500 | LARGE T&R	Yes	NIPDAU	Level-1-260C-UNLIM	-40 to 125	L2902KA

Orderable part number	Status (1)	Material type (2)	Package | Pins	Package qty | Carrier	RoHS (3)	Lead finish/ Ball material (4)	MSL rating/ Peak reflow (5)	Op temp (°C)	Part marking (6)
LM2902KAVQDRG4	Obsolete	Production	SOIC (D) | 14	-	-	Call TI	Call TI	-40 to 125	L2902KA
LM2902KAVQPWR	Active	Production	TSSOP (PW) | 14	2000 | LARGE T&R	Yes	NIPDAU	Level-1-260C-UNLIM	-40 to 125	L2902KA
LM2902KAVQPWR.A	Active	Production	TSSOP (PW) | 14	2000 | LARGE T&R	Yes	NIPDAU	Level-1-260C-UNLIM	-40 to 125	L2902KA
LM2902KAVQPWRG4	Active	Production	TSSOP (PW) | 14	2000 | LARGE T&R	Yes	NIPDAU	Level-1-260C-UNLIM	-40 to 125	L2902KA
LM2902KAVQPWRG4.A	Active	Production	TSSOP (PW) | 14	2000 | LARGE T&R	Yes	NIPDAU	Level-1-260C-UNLIM	-40 to 125	L2902KA
LM2902KD	Obsolete	Production	SOIC (D) | 14	-	-	Call TI	Call TI	-40 to 125	LM2902K
LM2902KDB	Active	Production	SSOP (DB) | 14	80 | TUBE	Yes	NIPDAU	Level-1-260C-UNLIM	-40 to 125	L2902K
LM2902KDB.A	Active	Production	SSOP (DB) | 14	80 | TUBE	Yes	NIPDAU	Level-1-260C-UNLIM	-40 to 125	L2902K
LM2902KDR	Active	Production	SOIC (D) | 14	2500 | LARGE T&R	Yes	NIPDAU	Level-1-260C-UNLIM	-40 to 125	LM2902K
LM2902KDR.A	Active	Production	SOIC (D) | 14	2500 | LARGE T&R	Yes	NIPDAU	Level-1-260C-UNLIM	-40 to 125	LM2902K
LM2902KN	Active	Production	PDIP (N) | 14	25 | TUBE	Yes	NIPDAU	N/A for Pkg Type	-40 to 125	LM2902KN
LM2902KN.A	Active	Production	PDIP (N) | 14	25 | TUBE	Yes	NIPDAU	N/A for Pkg Type	-40 to 125	LM2902KN
LM2902KNSR	Active	Production	SOP (NS) | 14	2000 | LARGE T&R	Yes	NIPDAU	Level-1-260C-UNLIM	-40 to 125	LM2902K
LM2902KNSR.A	Active	Production	SOP (NS) | 14	2000 | LARGE T&R	Yes	NIPDAU	Level-1-260C-UNLIM	-40 to 125	LM2902K
LM2902KNSRG4	Active	Production	SOP (NS) | 14	2000 | LARGE T&R	Yes	NIPDAU	Level-1-260C-UNLIM	-40 to 125	LM2902K
LM2902KPW	Obsolete	Production	TSSOP (PW) | 14	-	-	Call TI	Call TI	-40 to 125	L2902K
LM2902KPWR	Active	Production	TSSOP (PW) | 14	2000 | LARGE T&R	Yes	NIPDAU	Level-1-260C-UNLIM	-40 to 125	L2902K
LM2902KPWR.A	Active	Production	TSSOP (PW) | 14	2000 | LARGE T&R	Yes	NIPDAU	Level-1-260C-UNLIM	-40 to 125	L2902K
LM2902KVQDR	Active	Production	SOIC (D) | 14	2500 | LARGE T&R	Yes	NIPDAU	Level-1-260C-UNLIM	-40 to 125	L2902KV
LM2902KVQDR.A	Active	Production	SOIC (D) | 14	2500 | LARGE T&R	Yes	NIPDAU	Level-1-260C-UNLIM	-40 to 125	L2902KV
LM2902KVQDRG4	Obsolete	Production	SOIC (D) | 14	-	-	Call TI	Call TI	-40 to 125	L2902KV
LM2902KVQPWR	Active	Production	TSSOP (PW) | 14	2000 | LARGE T&R	Yes	NIPDAU	Level-1-260C-UNLIM	-40 to 125	L2902KV
LM2902KVQPWR.A	Active	Production	TSSOP (PW) | 14	2000 | LARGE T&R	Yes	NIPDAU	Level-1-260C-UNLIM	-40 to 125	L2902KV
LM2902KVQPWRG4	Obsolete	Production	TSSOP (PW) | 14	-	-	Call TI	Call TI	-40 to 125	L2902KV
LM2902N	Active	Production	PDIP (N) | 14	25 | TUBE	Yes	NIPDAU	N/A for Pkg Type	-40 to 125	LM2902N
LM2902N.A	Active	Production	PDIP (N) | 14	25 | TUBE	Yes	NIPDAU	N/A for Pkg Type	-40 to 125	LM2902N
LM2902NE4	Obsolete	Production	PDIP (N) | 14	-	-	Call TI	Call TI	-40 to 125	LM2902N
LM2902NSR	Active	Production	SOP (NS) | 14	2000 | LARGE T&R	Yes	NIPDAU	Level-1-260C-UNLIM	-40 to 125	LM2902
LM2902NSR.A	Active	Production	SOP (NS) | 14	2000 | LARGE T&R	Yes	NIPDAU	Level-1-260C-UNLIM	-40 to 125	LM2902
LM2902PW	Obsolete	Production	TSSOP (PW) | 14	-	-	Call TI	Call TI	-40 to 125	L2902
LM2902PWR	Active	Production	TSSOP (PW) | 14	2000 | LARGE T&R	Yes	NIPDAU	Level-1-260C-UNLIM	-40 to 125	L2902

Orderable part number	Status (1)	Material type (2)	Package | Pins	Package qty | Carrier	RoHS (3)	Lead finish/ Ball material (4)	MSL rating/ Peak reflow (5)	Op temp (°C)	Part marking (6)
LM2902PWR.A	Active	Production	TSSOP (PW) | 14	2000 | LARGE T&R	Yes	NIPDAU	Level-1-260C-UNLIM	-40 to 125	L2902
LM2902PWRE4	Active	Production	TSSOP (PW) | 14	2000 | LARGE T&R	Yes	NIPDAU	Level-1-260C-UNLIM	-40 to 125	L2902
LM2902PWRG3	Obsolete	Production	TSSOP (PW) | 14	-	-	Call TI	Call TI	-40 to 125	L2902
LM2902PWRG4	Active	Production	TSSOP (PW) | 14	2000 | LARGE T&R	Yes	NIPDAU	Level-1-260C-UNLIM	-40 to 125	L2902
LM2902PWRG4.A	Active	Production	TSSOP (PW) | 14	2000 | LARGE T&R	Yes	NIPDAU	Level-1-260C-UNLIM	-40 to 125	L2902
LM324AD	Obsolete	Production	SOIC (D) | 14	-	-	Call TI	Call TI	0 to 70	LM324A
LM324ADBR	Active	Production	SSOP (DB) | 14	2000 | LARGE T&R	Yes	NIPDAU	Level-1-260C-UNLIM	0 to 70	LM324A
LM324ADBR.A	Active	Production	SSOP (DB) | 14	2000 | LARGE T&R	Yes	NIPDAU	Level-1-260C-UNLIM	0 to 70	LM324A
LM324ADR	Active	Production	SOIC (D) | 14	2500 | LARGE T&R	Yes	NIPDAU	Level-1-260C-UNLIM	0 to 70	LM324A
LM324ADR.A	Active	Production	SOIC (D) | 14	2500 | LARGE T&R	Yes	NIPDAU	Level-1-260C-UNLIM	0 to 70	LM324A
LM324ADRG4	Obsolete	Production	SOIC (D) | 14	-	-	Call TI	Call TI	0 to 70	LM324A
LM324AN	Active	Production	PDIP (N) | 14	25 | TUBE	Yes	NIPDAU	N/A for Pkg Type	0 to 70	LM324AN
LM324AN.A	Active	Production	PDIP (N) | 14	25 | TUBE	Yes	NIPDAU	N/A for Pkg Type	0 to 70	LM324AN
LM324ANSR	Active	Production	SOP (NS) | 14	2000 | LARGE T&R	Yes	NIPDAU	Level-1-260C-UNLIM	0 to 70	LM324A
LM324ANSR.A	Active	Production	SOP (NS) | 14	2000 | LARGE T&R	Yes	NIPDAU	Level-1-260C-UNLIM	0 to 70	LM324A
LM324ANSRG4	Active	Production	SOP (NS) | 14	2000 | LARGE T&R	Yes	NIPDAU	Level-1-260C-UNLIM	0 to 70	LM324A
LM324APWR	Active	Production	TSSOP (PW) | 14	2000 | LARGE T&R	Yes	NIPDAU	Level-1-260C-UNLIM	0 to 70	L324A
LM324APWR.A	Active	Production	TSSOP (PW) | 14	2000 | LARGE T&R	Yes	NIPDAU	Level-1-260C-UNLIM	0 to 70	L324A
LM324APWRG4	Active	Production	TSSOP (PW) | 14	2000 | LARGE T&R	Yes	NIPDAU	Level-1-260C-UNLIM	0 to 70	L324A
LM324APWRG4.A	Active	Production	TSSOP (PW) | 14	2000 | LARGE T&R	Yes	NIPDAU	Level-1-260C-UNLIM	0 to 70	L324A
LM324BAIDR	Active	Production	SOIC (D) | 14	3000 | LARGE T&R	Yes	NIPDAU	Level-1-260C-UNLIM	-40 to 85	LM324BA
LM324BAIDR.A	Active	Production	SOIC (D) | 14	3000 | LARGE T&R	Yes	NIPDAU	Level-1-260C-UNLIM	-40 to 85	LM324BA
LM324BAIPWR	Active	Production	TSSOP (PW) | 14	3000 | LARGE T&R	Yes	NIPDAU	Level-1-260C-UNLIM	-40 to 85	L324BA
LM324BAIPWR.A	Active	Production	TSSOP (PW) | 14	3000 | LARGE T&R	Yes	NIPDAU	Level-1-260C-UNLIM	-40 to 85	L324BA
LM324BIDR	Active	Production	SOIC (D) | 14	3000 | LARGE T&R	Yes	NIPDAU	Level-1-260C-UNLIM	-40 to 85	LM324B
LM324BIDR.A	Active	Production	SOIC (D) | 14	3000 | LARGE T&R	Yes	NIPDAU	Level-1-260C-UNLIM	-40 to 85	LM324B
LM324BIPWR	Active	Production	TSSOP (PW) | 14	3000 | LARGE T&R	Yes	NIPDAU	Level-1-260C-UNLIM	-40 to 85	LM324B
LM324BIPWR.A	Active	Production	TSSOP (PW) | 14	3000 | LARGE T&R	Yes	NIPDAU	Level-1-260C-UNLIM	-40 to 85	LM324B
LM324BIRTER	Active	Production	WQFN (RTE) | 16	5000 | LARGE T&R	Yes	NIPDAU	Level-1-260C-UNLIM	-40 to 85	LM324B
LM324D	Obsolete	Production	SOIC (D) | 14	-	-	Call TI	Call TI	0 to 70	LM324
LM324DR	Active	Production	SOIC (D) | 14	2500 | LARGE T&R	Yes	NIPDAU	Level-1-260C-UNLIM	0 to 70	LM324

Orderable part number	Status (1)	Material type (2)	Package | Pins	Package qty | Carrier	RoHS (3)	Lead finish/ Ball material (4)	MSL rating/ Peak reflow (5)	Op temp (°C)	Part marking (6)
LM324DR.A	Active	Production	SOIC (D) | 14	2500 | LARGE T&R	Yes	NIPDAU	Level-1-260C-UNLIM	0 to 70	LM324
LM324DRE4	Active	Production	SOIC (D) | 14	2500 | LARGE T&R	Yes	NIPDAU	Level-1-260C-UNLIM	0 to 70	LM324
LM324DRG3	Obsolete	Production	SOIC (D) | 14	-	-	Call TI	Call TI	0 to 70	LM324
LM324DRG4	Active	Production	SOIC (D) | 14	2500 | LARGE T&R	Yes	NIPDAU	Level-1-260C-UNLIM	0 to 70	LM324
LM324DRG4.A	Active	Production	SOIC (D) | 14	2500 | LARGE T&R	Yes	NIPDAU	Level-1-260C-UNLIM	0 to 70	LM324
LM324KAD	Obsolete	Production	SOIC (D) | 14	-	-	Call TI	Call TI	0 to 70	LM324KA
LM324KADR	Active	Production	SOIC (D) | 14	2500 | LARGE T&R	Yes	NIPDAU	Level-1-260C-UNLIM	0 to 70	LM324KA
LM324KADR.A	Active	Production	SOIC (D) | 14	2500 | LARGE T&R	Yes	NIPDAU	Level-1-260C-UNLIM	0 to 70	LM324KA
LM324KADRG4	Active	Production	SOIC (D) | 14	2500 | LARGE T&R	-	Call TI	Call TI	0 to 70	
LM324KAN	Active	Production	PDIP (N) | 14	25 | TUBE	Yes	NIPDAU	N/A for Pkg Type	0 to 70	LM324KAN
LM324KAN.A	Active	Production	PDIP (N) | 14	25 | TUBE	Yes	NIPDAU	N/A for Pkg Type	0 to 70	LM324KAN
LM324KANSR	Active	Production	SOP (NS) | 14	2000 | LARGE T&R	Yes	NIPDAU	Level-1-260C-UNLIM	0 to 70	LM324KA
LM324KANSR.A	Active	Production	SOP (NS) | 14	2000 | LARGE T&R	Yes	NIPDAU	Level-1-260C-UNLIM	0 to 70	LM324KA
LM324KAPW	Obsolete	Production	TSSOP (PW) | 14	-	-	Call TI	Call TI	0 to 70	L324KA
LM324KAPWR	Active	Production	TSSOP (PW) | 14	2000 | LARGE T&R	Yes	NIPDAU	Level-1-260C-UNLIM	0 to 70	L324KA
LM324KAPWR.A	Active	Production	TSSOP (PW) | 14	2000 | LARGE T&R	Yes	NIPDAU	Level-1-260C-UNLIM	0 to 70	L324KA
LM324KDR	Active	Production	SOIC (D) | 14	2500 | LARGE T&R	Yes	NIPDAU	Level-1-260C-UNLIM	0 to 70	LM324K
LM324KDR.A	Active	Production	SOIC (D) | 14	2500 | LARGE T&R	Yes	NIPDAU	Level-1-260C-UNLIM	0 to 70	LM324K
LM324KN	Active	Production	PDIP (N) | 14	25 | TUBE	Yes	NIPDAU	N/A for Pkg Type	0 to 70	LM324KN
LM324KN.A	Active	Production	PDIP (N) | 14	25 | TUBE	Yes	NIPDAU	N/A for Pkg Type	0 to 70	LM324KN
LM324KNSR	Active	Production	SOP (NS) | 14	2000 | LARGE T&R	Yes	NIPDAU	Level-1-260C-UNLIM	0 to 70	LM324K
LM324KNSR.A	Active	Production	SOP (NS) | 14	2000 | LARGE T&R	Yes	NIPDAU	Level-1-260C-UNLIM	0 to 70	LM324K
LM324KPW	Obsolete	Production	TSSOP (PW) | 14	-	-	Call TI	Call TI	0 to 70	L324K
LM324KPWR	Active	Production	TSSOP (PW) | 14	2000 | LARGE T&R	Yes	NIPDAU	Level-1-260C-UNLIM	0 to 70	L324K
LM324KPWR.A	Active	Production	TSSOP (PW) | 14	2000 | LARGE T&R	Yes	NIPDAU	Level-1-260C-UNLIM	0 to 70	L324K
LM324N	Active	Production	PDIP (N) | 14	25 | TUBE	Yes	NIPDAU	N/A for Pkg Type	0 to 70	LM324N
LM324N.A	Active	Production	PDIP (N) | 14	25 | TUBE	Yes	NIPDAU	N/A for Pkg Type	0 to 70	LM324N
LM324NE3	Obsolete	Production	PDIP (N) | 14	-	-	Call TI	Call TI	0 to 70	LM324N
LM324NE4	Obsolete	Production	PDIP (N) | 14	-	-	Call TI	Call TI	0 to 70	LM324N
LM324NSR	Active	Production	SOP (NS) | 14	2000 | LARGE T&R	Yes	NIPDAU	Level-1-260C-UNLIM	0 to 70	LM324
LM324NSR.A	Active	Production	SOP (NS) | 14	2000 | LARGE T&R	Yes	NIPDAU	Level-1-260C-UNLIM	0 to 70	LM324

Orderable part number	Status (1)	Material type (2)	Package | Pins	Package qty | Carrier	RoHS (3)	Lead finish/ Ball material (4)	MSL rating/ Peak reflow (5)	Op temp (°C)	Part marking (6)
LM324NSRE4	Active	Production	SOP (NS) | 14	2000 | LARGE T&R	Yes	NIPDAU	Level-1-260C-UNLIM	0 to 70	LM324
LM324NSRG4	Active	Production	SOP (NS) | 14	2000 | LARGE T&R	Yes	NIPDAU	Level-1-260C-UNLIM	0 to 70	LM324
LM324PW	Obsolete	Production	TSSOP (PW) | 14	-	-	Call TI	Call TI	0 to 70	L324
LM324PWR	Active	Production	TSSOP (PW) | 14	2000 | LARGE T&R	Yes	NIPDAU	Level-1-260C-UNLIM	0 to 70	L324
LM324PWR.A	Active	Production	TSSOP (PW) | 14	2000 | LARGE T&R	Yes	NIPDAU	Level-1-260C-UNLIM	0 to 70	L324
LM324PWRE4	Active	Production	TSSOP (PW) | 14	2000 | LARGE T&R	Yes	NIPDAU	Level-1-260C-UNLIM	0 to 70	L324
LM324PWRG3	Obsolete	Production	TSSOP (PW) | 14	-	-	Call TI	Call TI	0 to 70	L324
LM324PWRG4	Active	Production	TSSOP (PW) | 14	2000 | LARGE T&R	Yes	NIPDAU	Level-1-260C-UNLIM	0 to 70	L324
LM324PWRG4.A	Active	Production	TSSOP (PW) | 14	2000 | LARGE T&R	Yes	NIPDAU	Level-1-260C-UNLIM	0 to 70	L324
M38510/11005BCA	Active	Production	CDIP (J) | 14	25 | TUBE	No	SNPB	N/A for Pkg Type	-55 to 125	JM38510 /11005BCA

(1) **Status:** For more details on status, see our product life cycle.

(2) **Material type:** When designated, preproduction parts are prototypes/experimental devices, and are not yet approved or released for full production. Testing and final process, including without limitation quality assurance, reliability performance testing, and/or process qualification, may not yet be complete, and this item is subject to further changes or possible discontinuation. If available for ordering, purchases will be subject to an additional waiver at checkout, and are intended for early internal evaluation purposes only. These items are sold without warranties of any kind.

(3) **RoHS values:** Yes, No, RoHS Exempt. See the TI RoHS Statement for additional information and value definition.

(4) **Lead finish/Ball material:** Parts may have multiple material finish options. Finish options are separated by a vertical ruled line. Lead finish/Ball material values may wrap to two lines if the finish value exceeds the maximum column width.

(5) **MSL rating/Peak reflow:** The moisture sensitivity level ratings and peak solder (reflow) temperatures. In the event that a part has multiple moisture sensitivity ratings, only the lowest level per JEDEC standards is shown. Refer to the shipping label for the actual reflow temperature that will be used to mount the part to the printed circuit board.

(6) **Part marking:** There may be an additional marking, which relates to the logo, the lot trace code information, or the environmental category of the part.

Multiple part markings will be inside parentheses. Only one part marking contained in parentheses and separated by a "~" will appear on a part. If a line is indented then it is a continuation of the previous line and the two combined represent the entire part marking for that device.

Important Information and Disclaimer: The information provided on this page represents TI's knowledge and belief as of the date that it is provided. TI bases its knowledge and belief on information provided by third parties, and makes no representation or warranty as to the accuracy of such information. Efforts are underway to better integrate information from third parties. TI has taken and continues to take reasonable steps to provide representative

and accurate information but may not have conducted destructive testing or chemical analysis on incoming materials and chemicals. TI and TI suppliers consider certain information to be proprietary, and thus CAS numbers and other limited information may not be available for release.

In no event shall TI's liability arising out of such information exceed the total purchase price of the TI part(s) at issue in this document sold by TI to Customer on an annual basis.

OTHER QUALIFIED VERSIONS OF LM124, LM124M, LM2902, LM2902B, LM2902BA :

- Catalog : LM124
- Automotive : LM2902-Q1, LM2902B-Q1, LM2902BA-Q1
- Enhanced Product : LM2902-EP
- Military : LM124M
- Space : LM124-SP, LM124-SP

NOTE: Qualified Version Definitions:

- Catalog - TI's standard catalog product
- Automotive - Q100 devices qualified for high-reliability automotive applications targeting zero defects
- Enhanced Product - Supports Defense, Aerospace and Medical Applications
- Military - QML certified for Military and Defense Applications
- Space - Radiation tolerant, ceramic packaging and qualified for use in Space-based application

TAPE AND REEL INFORMATION

REEL DIMENSIONS

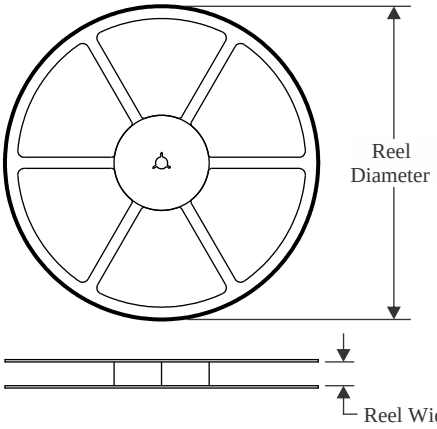

TAPE DIMENSIONS

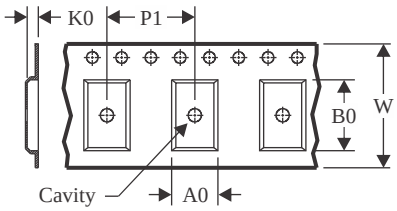

A0	Dimension designed to accommodate the component width
B0	Dimension designed to accommodate the component length
K0	Dimension designed to accommodate the component thickness
W	Overall width of the carrier tape
P1	Pitch between successive cavity centers

QUADRANT ASSIGNMENTS FOR PIN 1 ORIENTATION IN TAPE

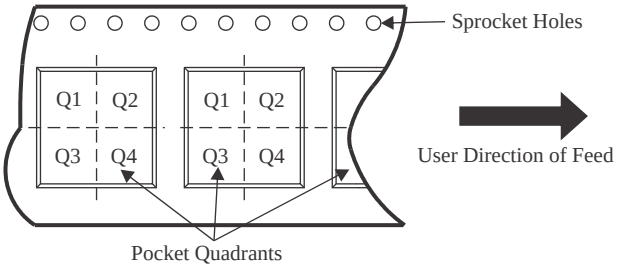

*All dimensions are nominal

Device	Package Type	Package Drawing	Pins	SPQ	Reel Diameter (mm)	Reel Width W1 (mm)	A0 (mm)	B0 (mm)	K0 (mm)	P1 (mm)	W (mm)	Pin1 Quadrant
LM124DR	SOIC	D	14	2500	330.0	16.4	6.5	9.0	2.1	8.0	16.0	Q1
LM124DRG4	SOIC	D	14	2500	330.0	16.4	6.5	9.0	2.1	8.0	16.0	Q1
LM224ADR	SOIC	D	14	2500	330.0	12.4	6.4	5.2	2.1	8.0	12.0	Q1
LM224ADR	SOIC	D	14	2500	330.0	16.4	6.5	9.0	2.1	8.0	16.0	Q1
LM224ADRG4	SOIC	D	14	2500	330.0	16.4	6.5	9.0	2.1	8.0	16.0	Q1
LM224DR	SOIC	D	14	2500	330.0	12.4	6.4	5.2	2.1	8.0	12.0	Q1
LM224KADR	SOIC	D	14	2500	330.0	12.4	6.4	5.2	2.1	8.0	12.0	Q1
LM224KDR	SOIC	D	14	2500	330.0	12.4	6.4	5.2	2.1	8.0	12.0	Q1
LM2902BAIDR	SOIC	D	14	3000	330.0	12.4	6.4	5.2	2.1	8.0	12.0	Q1
LM2902BAIPWR	TSSOP	PW	14	3000	330.0	12.4	6.9	5.6	1.6	8.0	12.0	Q1
LM2902BIDR	SOIC	D	14	3000	330.0	12.4	6.4	5.2	2.1	8.0	12.0	Q1
LM2902BIPWR	TSSOP	PW	14	3000	330.0	12.4	6.9	5.6	1.6	8.0	12.0	Q1
LM2902BIRTER	WQFN	RTE	16	5000	330.0	12.4	3.3	3.3	1.1	8.0	12.0	Q2
LM2902DR	SOIC	D	14	2500	330.0	12.4	6.4	5.2	2.1	8.0	12.0	Q1
LM2902DR	SOIC	D	14	2500	330.0	16.4	6.5	9.0	2.1	8.0	16.0	Q1
LM2902DRG4	SOIC	D	14	2500	330.0	16.4	6.5	9.0	2.1	8.0	16.0	Q1

Device	Package Type	Package Drawing	Pins	SPQ	Reel Diameter (mm)	Reel Width W1 (mm)	A0 (mm)	B0 (mm)	K0 (mm)	P1 (mm)	W (mm)	Pin1 Quadrant
LM2902KAVQDR	SOIC	D	14	2500	330.0	12.4	6.4	5.2	2.1	8.0	12.0	Q1
LM2902KAVQPWR	TSSOP	PW	14	2000	330.0	12.4	6.9	5.6	1.6	8.0	12.0	Q1
LM2902KAVQPWR	TSSOP	PW	14	2000	330.0	12.4	6.9	5.6	1.6	8.0	12.0	Q1
LM2902KAVQPWRG4	TSSOP	PW	14	2000	330.0	12.4	6.9	5.6	1.6	8.0	12.0	Q1
LM2902KDR	SOIC	D	14	2500	330.0	12.4	6.4	5.2	2.1	8.0	12.0	Q1
LM2902KNSR	SOP	NS	14	2000	330.0	16.4	8.1	10.4	2.5	12.0	16.0	Q1
LM2902KPWR	TSSOP	PW	14	2000	330.0	12.4	6.9	5.6	1.6	8.0	12.0	Q1
LM2902KPWR	TSSOP	PW	14	2000	330.0	12.4	6.9	5.6	1.6	8.0	12.0	Q1
LM2902KVQDR	SOIC	D	14	2500	330.0	12.4	6.4	5.2	2.1	8.0	12.0	Q1
LM2902KVQPWR	TSSOP	PW	14	2000	330.0	12.4	6.9	5.6	1.6	8.0	12.0	Q1
LM2902KVQPWR	TSSOP	PW	14	2000	330.0	12.4	6.9	5.6	1.6	8.0	12.0	Q1
LM2902NSR	SOP	NS	14	2000	330.0	16.4	8.1	10.4	2.5	12.0	16.0	Q1
LM2902PWR	TSSOP	PW	14	2000	330.0	12.4	6.9	5.6	1.6	8.0	12.0	Q1
LM2902PWRG4	TSSOP	PW	14	2000	330.0	12.4	6.9	5.6	1.6	8.0	12.0	Q1
LM324ADBR	SSOP	DB	14	2000	330.0	16.4	8.35	6.6	2.4	12.0	16.0	Q1
LM324ADR	SOIC	D	14	2500	330.0	12.4	6.4	5.2	2.1	8.0	12.0	Q1
LM324ADR	SOIC	D	14	2500	330.0	16.4	6.5	9.0	2.1	8.0	16.0	Q1
LM324ANSR	SOP	NS	14	2000	330.0	16.4	8.1	10.4	2.5	12.0	16.0	Q1
LM324APWR	TSSOP	PW	14	2000	330.0	12.4	6.9	5.6	1.6	8.0	12.0	Q1
LM324APWR	TSSOP	PW	14	2000	330.0	12.4	6.9	5.6	1.6	8.0	12.0	Q1
LM324APWRG4	TSSOP	PW	14	2000	330.0	12.4	6.9	5.6	1.6	8.0	12.0	Q1
LM324APWRG4	TSSOP	PW	14	2000	330.0	12.4	6.9	5.6	1.6	8.0	12.0	Q1
LM324BAIDR	SOIC	D	14	3000	330.0	12.4	6.4	5.2	2.1	8.0	12.0	Q1
LM324BAIPWR	TSSOP	PW	14	3000	330.0	12.4	6.9	5.6	1.6	8.0	12.0	Q1
LM324BIDR	SOIC	D	14	3000	330.0	12.4	6.4	5.2	2.1	8.0	12.0	Q1
LM324BIPWR	TSSOP	PW	14	3000	330.0	12.4	6.9	5.6	1.6	8.0	12.0	Q1
LM324BIRTER	WQFN	RTE	16	5000	330.0	12.4	3.3	3.3	1.1	8.0	12.0	Q2
LM324DR	SOIC	D	14	2500	330.0	16.4	6.5	9.0	2.1	8.0	16.0	Q1
LM324DRG4	SOIC	D	14	2500	330.0	16.4	6.5	9.0	2.1	8.0	16.0	Q1
LM324DRG4	SOIC	D	14	2500	330.0	16.4	6.5	9.0	2.1	8.0	16.0	Q1
LM324KADR	SOIC	D	14	2500	330.0	12.4	6.4	5.2	2.1	8.0	12.0	Q1
LM324KANSR	SOP	NS	14	2000	330.0	16.4	8.1	10.4	2.5	12.0	16.0	Q1
LM324KAPWR	TSSOP	PW	14	2000	330.0	12.4	6.9	5.6	1.6	8.0	12.0	Q1
LM324KAPWR	TSSOP	PW	14	2000	330.0	12.4	6.9	5.6	1.6	8.0	12.0	Q1
LM324KDR	SOIC	D	14	2500	330.0	12.4	6.4	5.2	2.1	8.0	12.0	Q1
LM324KNSR	SOP	NS	14	2000	330.0	16.4	8.1	10.4	2.5	12.0	16.0	Q1
LM324KPWR	TSSOP	PW	14	2000	330.0	12.4	6.9	5.6	1.6	8.0	12.0	Q1
LM324KPWR	TSSOP	PW	14	2000	330.0	12.4	6.9	5.6	1.6	8.0	12.0	Q1
LM324NSR	SOP	NS	14	2000	330.0	16.4	8.1	10.4	2.5	12.0	16.0	Q1
LM324PWR	TSSOP	PW	14	2000	330.0	12.4	6.9	5.6	1.6	8.0	12.0	Q1
LM324PWRG4	TSSOP	PW	14	2000	330.0	12.4	6.9	5.6	1.6	8.0	12.0	Q1

Device	Package Type	Package Drawing	Pins	SPQ	Reel Diameter (mm)	Reel Width W1 (mm)	A0 (mm)	B0 (mm)	K0 (mm)	P1 (mm)	W (mm)	Pin1 Quadrant
LM324PWRG4	TSSOP	PW	14	2000	330.0	12.4	6.9	5.6	1.6	8.0	12.0	Q1

TAPE AND REEL BOX DIMENSIONS

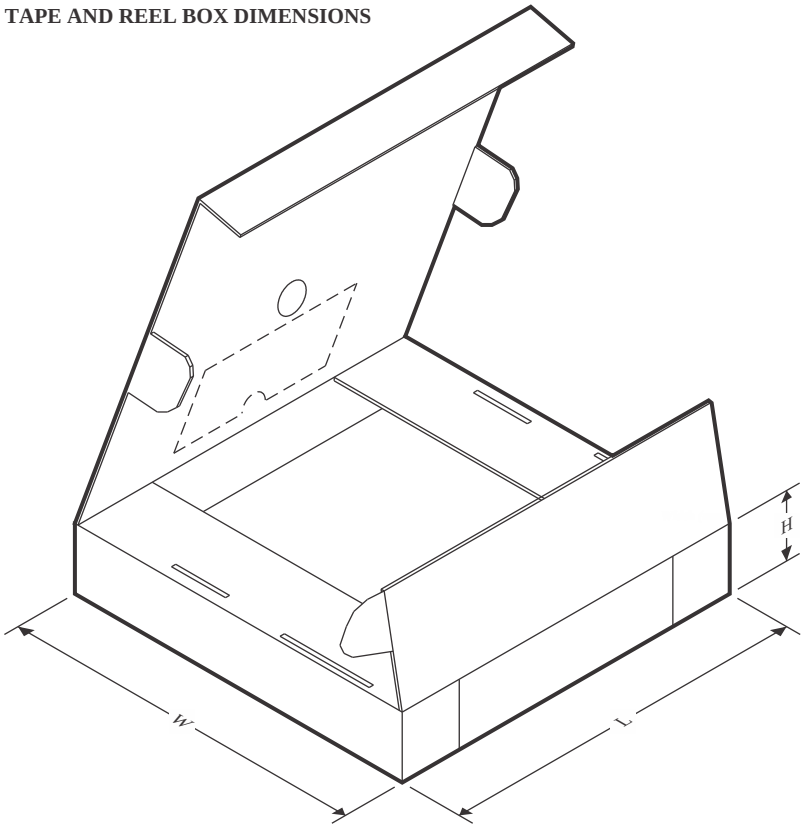

*All dimensions are nominal

Device	Package Type	Package Drawing	Pins	SPQ	Length (mm)	Width (mm)	Height (mm)
LM124DR	SOIC	D	14	2500	353.0	353.0	32.0
LM124DRG4	SOIC	D	14	2500	353.0	353.0	32.0
LM224ADR	SOIC	D	14	2500	340.5	336.1	25.0
LM224ADR	SOIC	D	14	2500	340.5	336.1	32.0
LM224ADRG4	SOIC	D	14	2500	340.5	336.1	32.0
LM224DR	SOIC	D	14	2500	340.5	336.1	25.0
LM224KADR	SOIC	D	14	2500	340.5	336.1	25.0
LM224KDR	SOIC	D	14	2500	340.5	336.1	25.0
LM2902BAIDR	SOIC	D	14	3000	353.0	353.0	32.0
LM2902BAIPWR	TSSOP	PW	14	3000	353.0	353.0	32.0
LM2902BIDR	SOIC	D	14	3000	340.5	336.1	25.0
LM2902BIPWR	TSSOP	PW	14	3000	353.0	353.0	32.0
LM2902BIRTER	WQFN	RTE	16	5000	367.0	367.0	35.0
LM2902DR	SOIC	D	14	2500	340.5	336.1	25.0
LM2902DR	SOIC	D	14	2500	353.0	353.0	32.0
LM2902DRG4	SOIC	D	14	2500	353.0	353.0	32.0
LM2902KAVQDR	SOIC	D	14	2500	340.5	336.1	25.0
LM2902KAVQPWR	TSSOP	PW	14	2000	353.0	353.0	32.0

Device	Package Type	Package Drawing	Pins	SPQ	Length (mm)	Width (mm)	Height (mm)
LM2902KAVQPWR	TSSOP	PW	14	2000	353.0	353.0	32.0
LM2902KAVQPWRG4	TSSOP	PW	14	2000	353.0	353.0	32.0
LM2902KDR	SOIC	D	14	2500	340.5	336.1	25.0
LM2902KNSR	SOP	NS	14	2000	353.0	353.0	32.0
LM2902KPWR	TSSOP	PW	14	2000	353.0	353.0	32.0
LM2902KPWR	TSSOP	PW	14	2000	353.0	353.0	32.0
LM2902KVQDR	SOIC	D	14	2500	340.5	336.1	25.0
LM2902KVQPWR	TSSOP	PW	14	2000	353.0	353.0	32.0
LM2902KVQPWR	TSSOP	PW	14	2000	353.0	353.0	32.0
LM2902NSR	SOP	NS	14	2000	353.0	353.0	32.0
LM2902PWR	TSSOP	PW	14	2000	353.0	353.0	32.0
LM2902PWRG4	TSSOP	PW	14	2000	353.0	353.0	32.0
LM324ADBR	SSOP	DB	14	2000	353.0	353.0	32.0
LM324ADR	SOIC	D	14	2500	340.5	336.1	25.0
LM324ADR	SOIC	D	14	2500	333.2	345.9	28.6
LM324ANSR	SOP	NS	14	2000	353.0	353.0	32.0
LM324APWR	TSSOP	PW	14	2000	353.0	353.0	32.0
LM324APWR	TSSOP	PW	14	2000	353.0	353.0	32.0
LM324APWRG4	TSSOP	PW	14	2000	353.0	353.0	32.0
LM324APWRG4	TSSOP	PW	14	2000	353.0	353.0	32.0
LM324BAIDR	SOIC	D	14	3000	340.5	336.1	25.0
LM324BAIPWR	TSSOP	PW	14	3000	353.0	353.0	32.0
LM324BIDR	SOIC	D	14	3000	340.5	336.1	25.0
LM324BIPWR	TSSOP	PW	14	3000	353.0	353.0	32.0
LM324BIRTER	WQFN	RTE	16	5000	360.0	360.0	36.0
LM324DR	SOIC	D	14	2500	353.0	353.0	32.0
LM324DRG4	SOIC	D	14	2500	353.0	353.0	32.0
LM324DRG4	SOIC	D	14	2500	353.0	353.0	32.0
LM324KADR	SOIC	D	14	2500	340.5	336.1	25.0
LM324KANSR	SOP	NS	14	2000	353.0	353.0	32.0
LM324KAPWR	TSSOP	PW	14	2000	353.0	353.0	32.0
LM324KAPWR	TSSOP	PW	14	2000	353.0	353.0	32.0
LM324KDR	SOIC	D	14	2500	340.5	336.1	25.0
LM324KNSR	SOP	NS	14	2000	353.0	353.0	32.0
LM324KPWR	TSSOP	PW	14	2000	353.0	353.0	32.0
LM324KPWR	TSSOP	PW	14	2000	353.0	353.0	32.0
LM324NSR	SOP	NS	14	2000	353.0	353.0	32.0
LM324PWR	TSSOP	PW	14	2000	353.0	353.0	32.0
LM324PWRG4	TSSOP	PW	14	2000	353.0	353.0	32.0
LM324PWRG4	TSSOP	PW	14	2000	353.0	353.0	32.0

TUBE

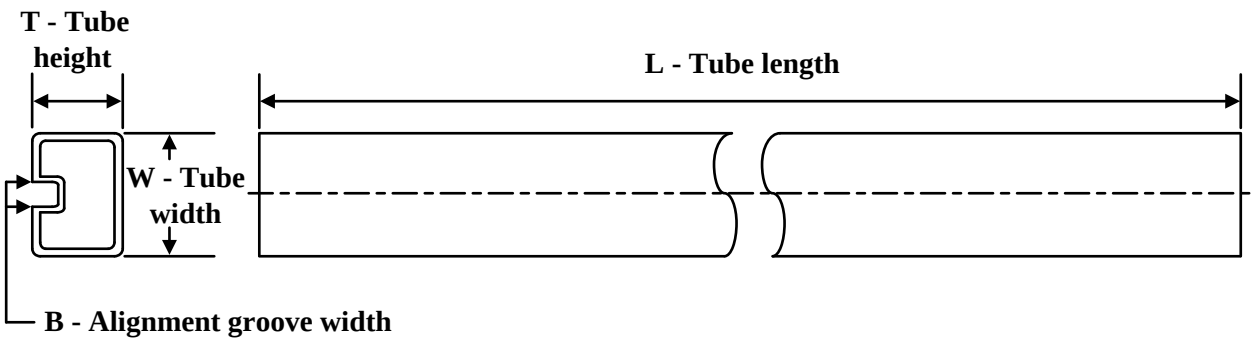

*All dimensions are nominal

Device	Package Name	Package Type	Pins	SPQ	L (mm)	W (mm)	T (µm)	B (mm)
77043012A	FK	LCCC	20	55	506.98	12.06	2030	NA
7704301DA	W	CFP	14	25	506.98	26.16	6220	NA
77043022A	FK	LCCC	20	55	506.98	12.06	2030	NA
7704302DA	W	CFP	14	25	506.98	26.16	6220	NA
LM124AFKB	FK	LCCC	20	55	506.98	12.06	2030	NA
LM124AFKB.A	FK	LCCC	20	55	506.98	12.06	2030	NA
LM124AWB	W	CFP	14	25	506.98	26.16	6220	NA
LM124AWB.A	W	CFP	14	25	506.98	26.16	6220	NA
LM124FKB	FK	LCCC	20	55	506.98	12.06	2030	NA
LM124FKB.A	FK	LCCC	20	55	506.98	12.06	2030	NA
LM124W	W	CFP	14	25	506.98	26.16	6220	NA
LM124W.A	W	CFP	14	25	506.98	26.16	6220	NA
LM124WB	W	CFP	14	25	506.98	26.16	6220	NA
LM124WB.A	W	CFP	14	25	506.98	26.16	6220	NA
LM224AN	N	PDIP	14	25	506	13.97	11230	4.32
LM224AN	N	PDIP	14	25	506	13.97	11230	4.32
LM224AN.A	N	PDIP	14	25	506	13.97	11230	4.32
LM224AN.A	N	PDIP	14	25	506	13.97	11230	4.32
LM224KAN	N	PDIP	14	25	506	13.97	11230	4.32
LM224KAN	N	PDIP	14	25	506	13.97	11230	4.32
LM224KAN.A	N	PDIP	14	25	506	13.97	11230	4.32
LM224KAN.A	N	PDIP	14	25	506	13.97	11230	4.32
LM224KN	N	PDIP	14	25	506	13.97	11230	4.32
LM224KN	N	PDIP	14	25	506	13.97	11230	4.32
LM224KN.A	N	PDIP	14	25	506	13.97	11230	4.32
LM224KN.A	N	PDIP	14	25	506	13.97	11230	4.32
LM224N	N	PDIP	14	25	506	13.97	11230	4.32
LM224N	N	PDIP	14	25	506	13.97	11230	4.32
LM224N.A	N	PDIP	14	25	506	13.97	11230	4.32

Device	Package Name	Package Type	Pins	SPQ	L (mm)	W (mm)	T (µm)	B (mm)
LM224N.A	N	PDIP	14	25	506	13.97	11230	4.32
LM2902KDB	DB	SSOP	14	80	530	10.5	4000	4.1
LM2902KDB.A	DB	SSOP	14	80	530	10.5	4000	4.1
LM2902KN	N	PDIP	14	25	506	13.97	11230	4.32
LM2902KN	N	PDIP	14	25	506	13.97	11230	4.32
LM2902KN.A	N	PDIP	14	25	506	13.97	11230	4.32
LM2902KN.A	N	PDIP	14	25	506	13.97	11230	4.32
LM2902N	N	PDIP	14	25	506	13.97	11230	4.32
LM2902N	N	PDIP	14	25	506	13.97	11230	4.32
LM2902N.A	N	PDIP	14	25	506	13.97	11230	4.32
LM2902N.A	N	PDIP	14	25	506	13.97	11230	4.32
LM324AN	N	PDIP	14	25	506	13.97	11230	4.32
LM324AN.A	N	PDIP	14	25	506	13.97	11230	4.32
LM324KAN	N	PDIP	14	25	506	13.97	11230	4.32
LM324KAN.A	N	PDIP	14	25	506	13.97	11230	4.32
LM324KN	N	PDIP	14	25	506	13.97	11230	4.32
LM324KN.A	N	PDIP	14	25	506	13.97	11230	4.32
LM324N	N	PDIP	14	25	506	13.97	11230	4.32
LM324N.A	N	PDIP	14	25	506	13.97	11230	4.32

GENERIC PACKAGE VIEW

RTE 16

WQFN - 0.8 mm max height

3 x 3, 0.5 mm pitch

PLASTIC QUAD FLATPACK - NO LEAD

This image is a representation of the package family, actual package may vary.
Refer to the product data sheet for package details.

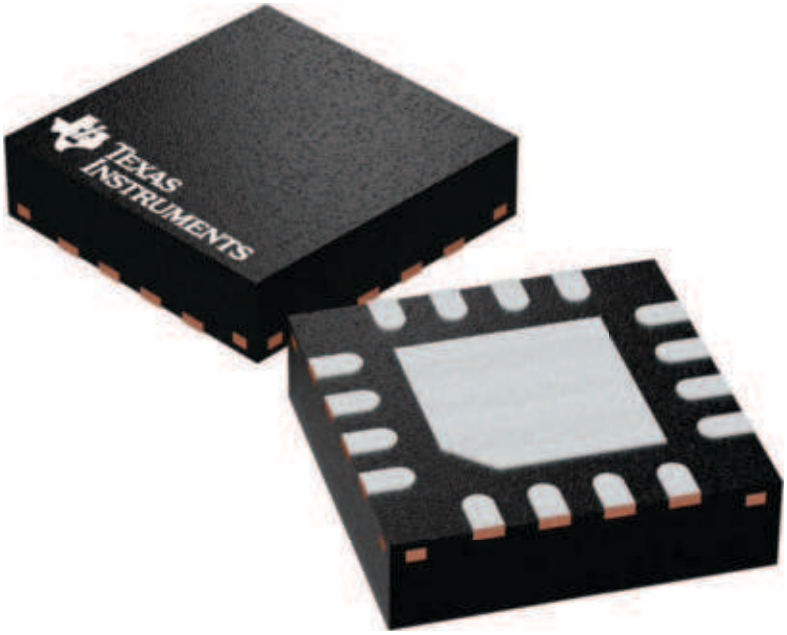

4225944/A

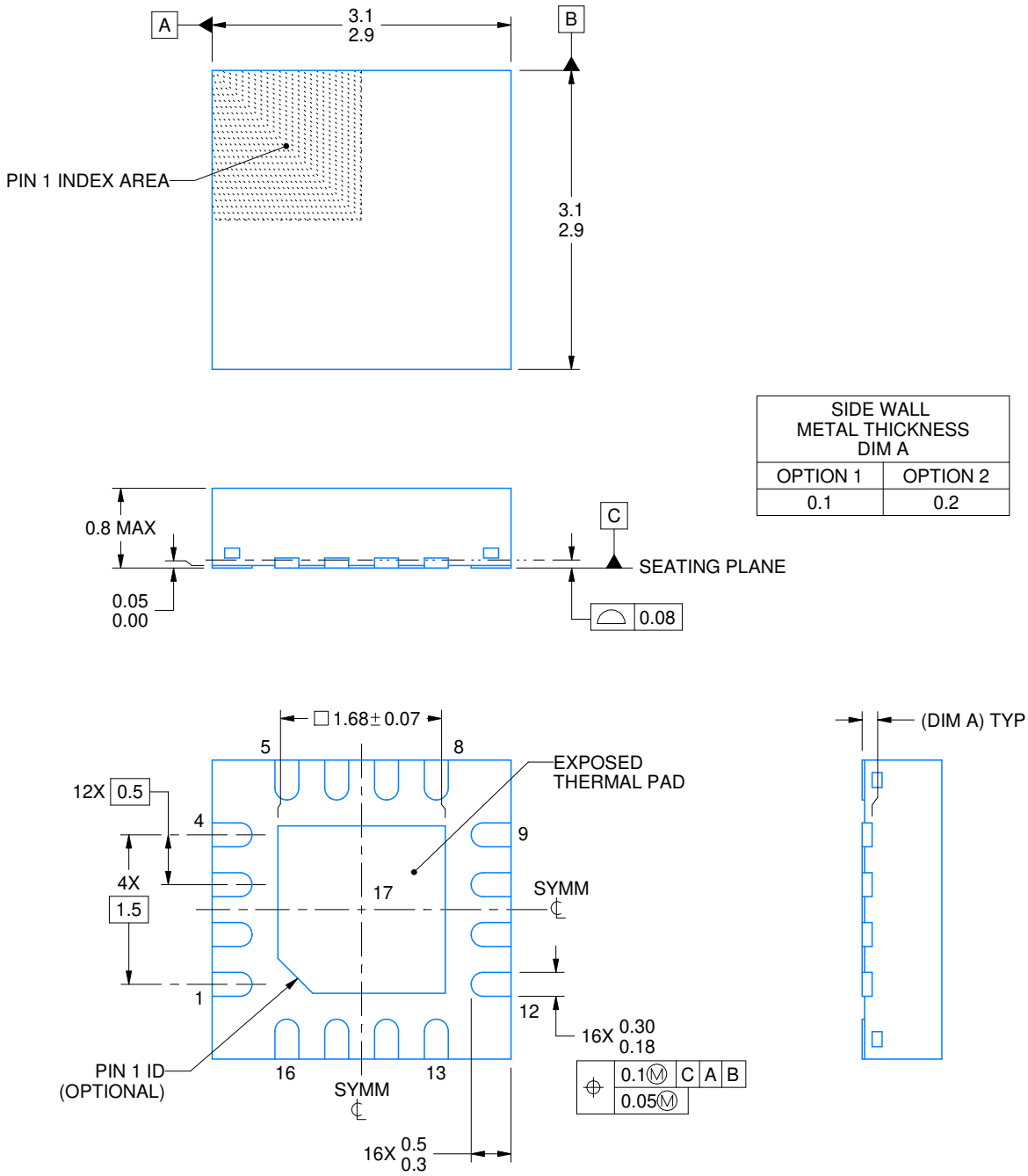

SIDE WALL METAL THICKNESS DIM A	
OPTION 1	OPTION 2
0.1	0.2

4219117/B 04/2022

NOTES:

1. All linear dimensions are in millimeters. Any dimensions in parenthesis are for reference only. Dimensioning and tolerancing per ASME Y14.5M.
2. This drawing is subject to change without notice.
3. The package thermal pad must be soldered to the printed circuit board for thermal and mechanical performance.

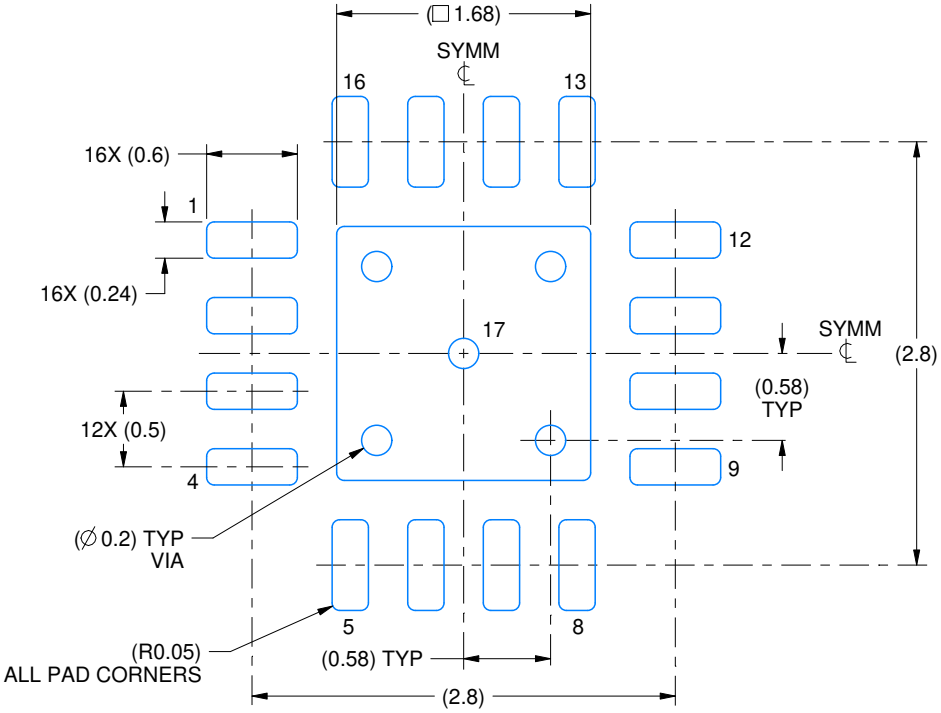

LAND PATTERN EXAMPLE
EXPOSED METAL SHOWN
SCALE:20X

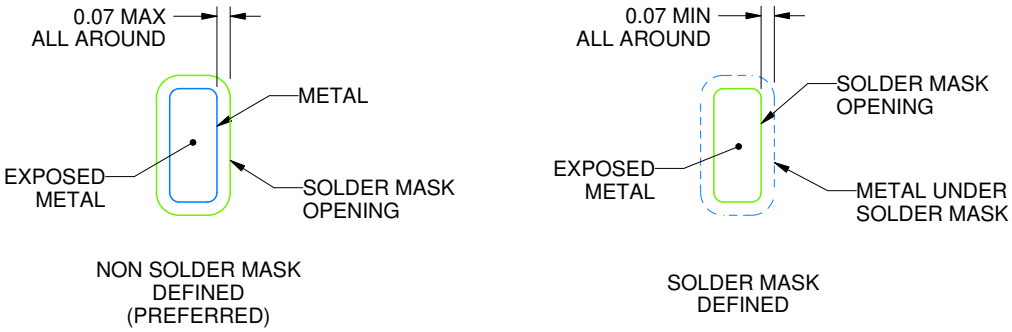

SOLDER MASK DETAILS

4219117/B 04/2022

NOTES: (continued)

4. This package is designed to be soldered to a thermal pad on the board. For more information, see Texas Instruments literature number SLUA271 (www.ti.com/lit/slua271).
5. Vias are optional depending on application, refer to device data sheet. If any vias are implemented, refer to their locations shown on this view. It is recommended that vias under paste be filled, plugged or tented.

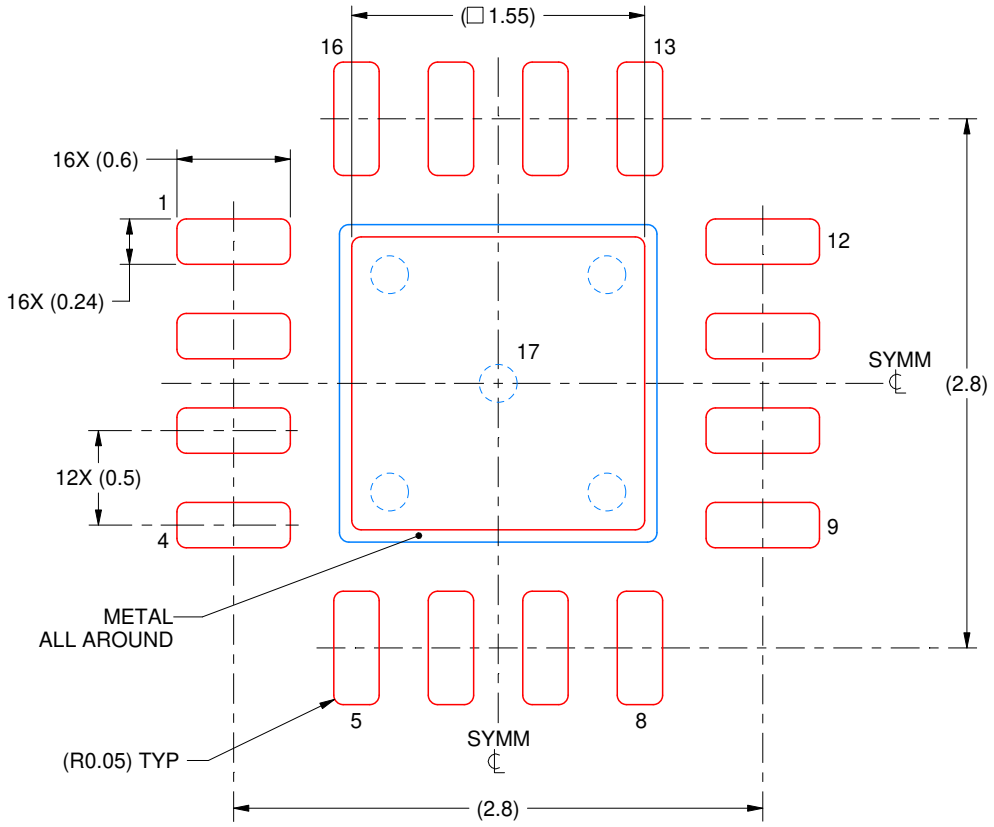

SOLDER PASTE EXAMPLE
BASED ON 0.125 mm THICK STENCIL

EXPOSED PAD 17:
85% PRINTED SOLDER COVERAGE BY AREA UNDER PACKAGE
SCALE:25X

4219117/B 04/2022

NOTES: (continued)

6. Laser cutting apertures with trapezoidal walls and rounded corners may offer better paste release. IPC-7525 may have alternate design recommendations.

W (R–GDFP–F14) CERAMIC DUAL FLATPACK

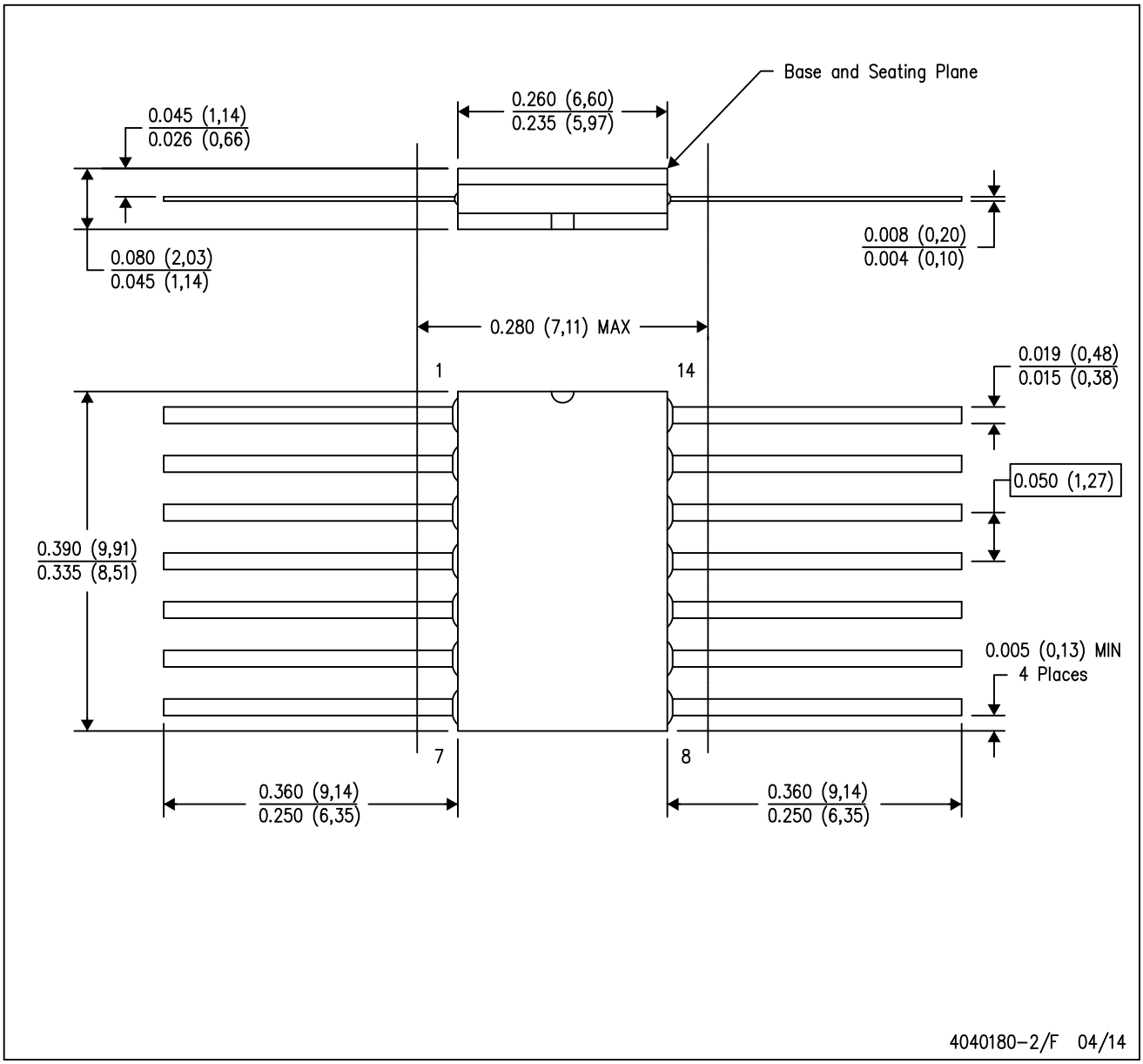

NOTES:
A. All linear dimensions are in inches (millimeters).
B. This drawing is subject to change without notice.
C. This package can be hermetically sealed with a ceramic lid using glass frit.
D. Index point is provided on cap for terminal identification only.
E. Falls within MIL STD 1835 GDFP1–F14

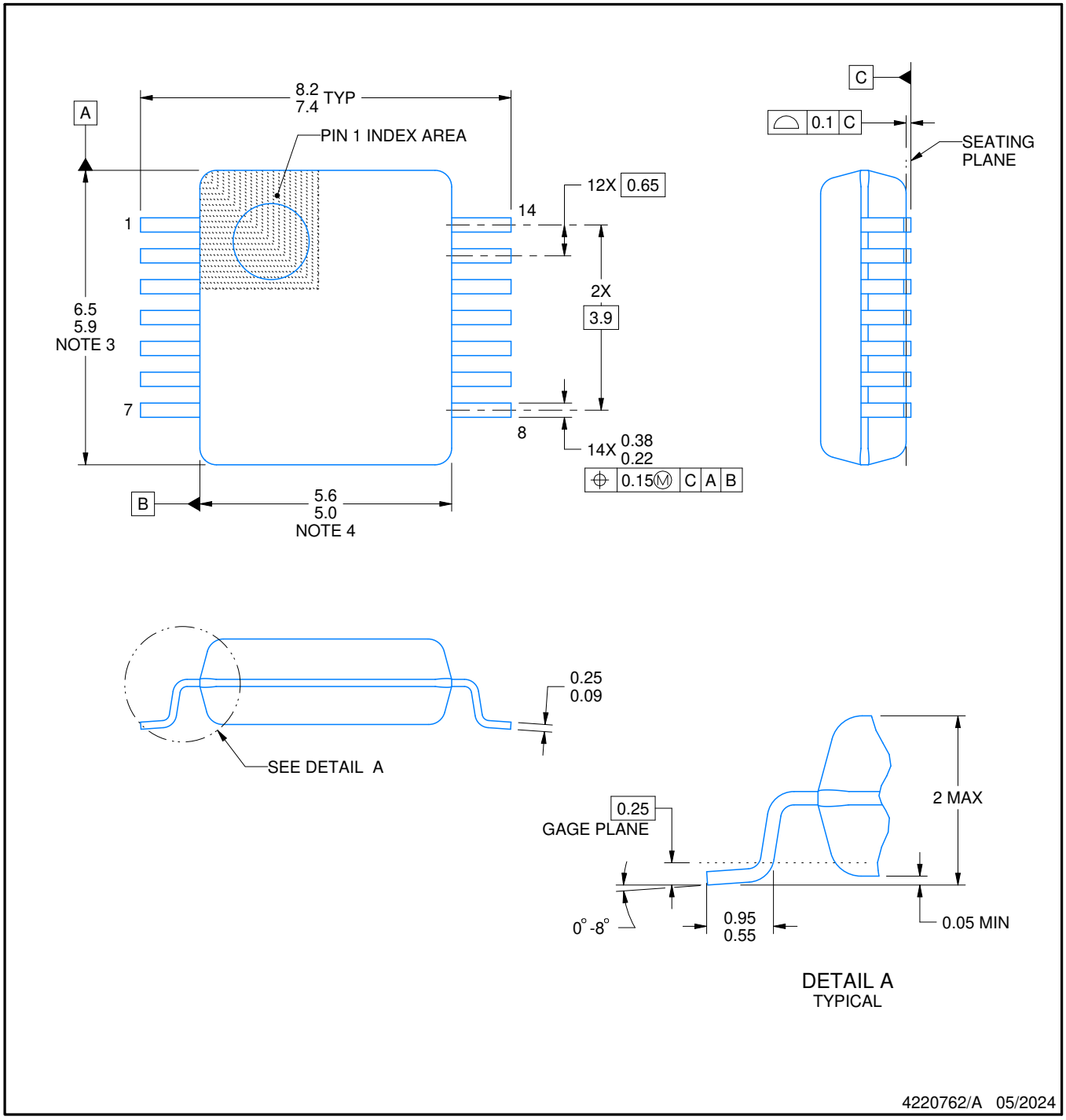

NOTES:

1. All linear dimensions are in millimeters. Any dimensions in parenthesis are for reference only. Dimensioning and tolerancing per ASME Y14.5M.
2. This drawing is subject to change without notice.
3. This dimension does not include mold flash, protrusions, or gate burrs. Mold flash, protrusions, or gate burrs shall not exceed 0.15 mm per side.
4. Reference JEDEC registration MO-150.

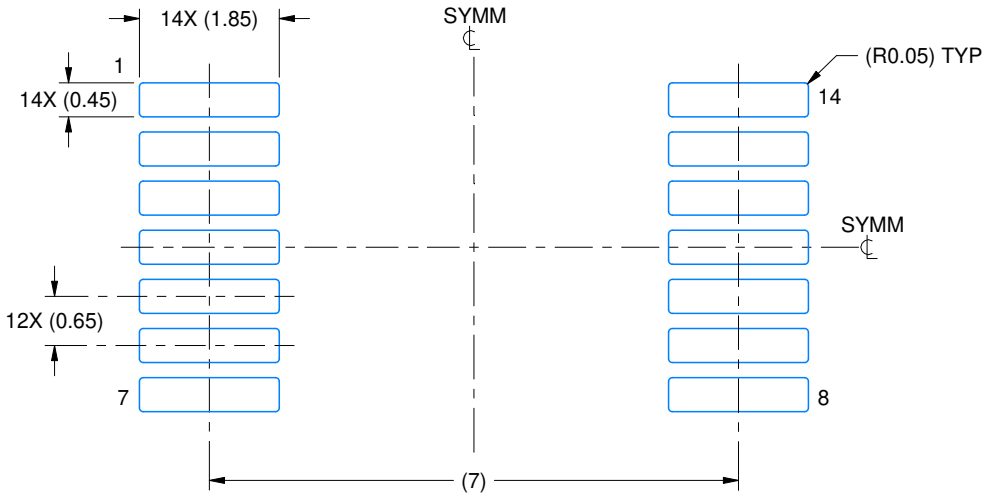

LAND PATTERN EXAMPLE
EXPOSED METAL SHOWN
SCALE: 10X

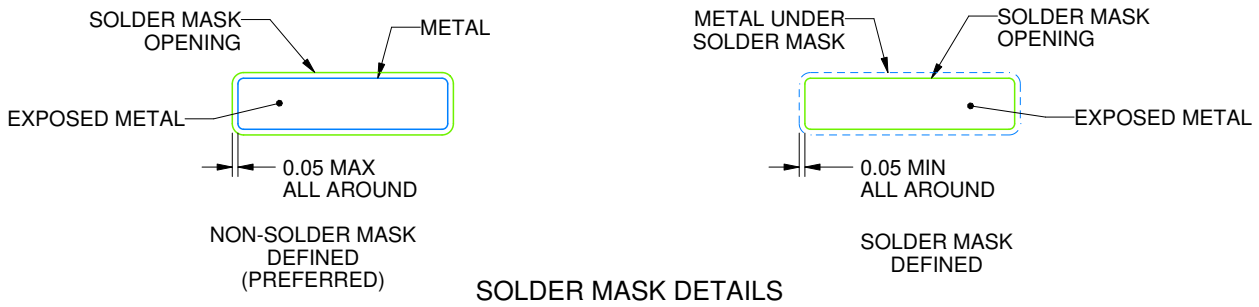

SOLDER MASK DETAILS

4220762/A 05/2024

NOTES: (continued)

5. Publication IPC-7351 may have alternate designs.
6. Solder mask tolerances between and around signal pads can vary based on board fabrication site.

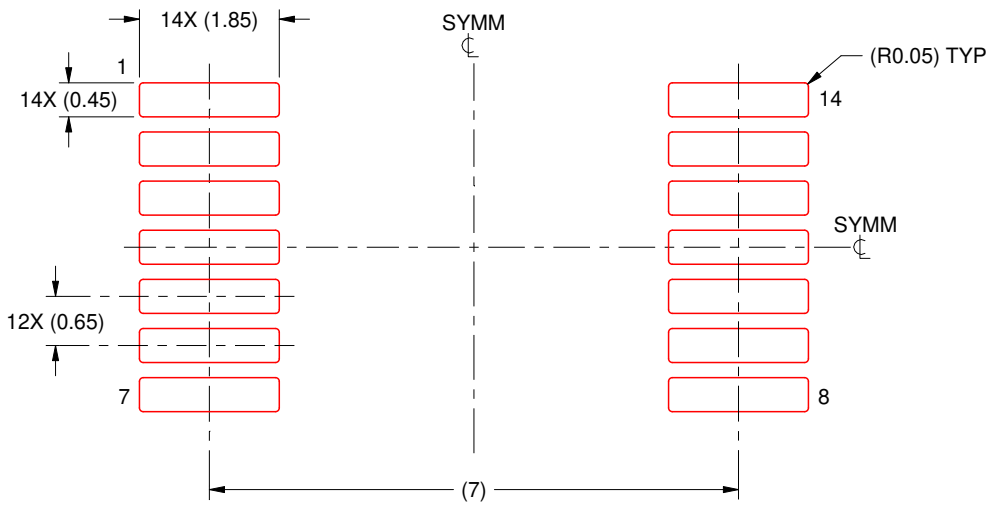

SOLDER PASTE EXAMPLE
BASED ON 0.125 mm THICK STENCIL
SCALE: 10X

4220762/A 05/2024

NOTES: (continued)

7. Laser cutting apertures with trapezoidal walls and rounded corners may offer better paste release. IPC-7525 may have alternate design recommendations.
8. Board assembly site may have different recommendations for stencil design.

GENERIC PACKAGE VIEW

FK 20

LCCC - 2.03 mm max height

8.89 x 8.89, 1.27 mm pitch

LEADLESS CERAMIC CHIP CARRIER

This image is a representation of the package family, actual package may vary.
Refer to the product data sheet for package details.

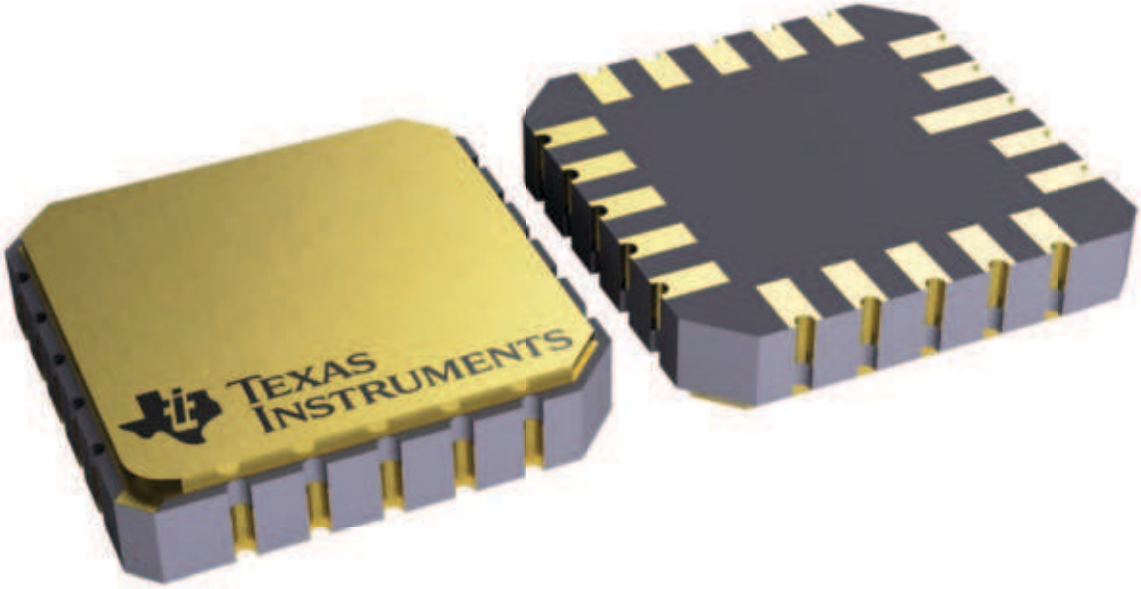

4229370\VA\

J 14

CDIP - 5.08 mm max height

CERAMIC DUAL IN LINE PACKAGE

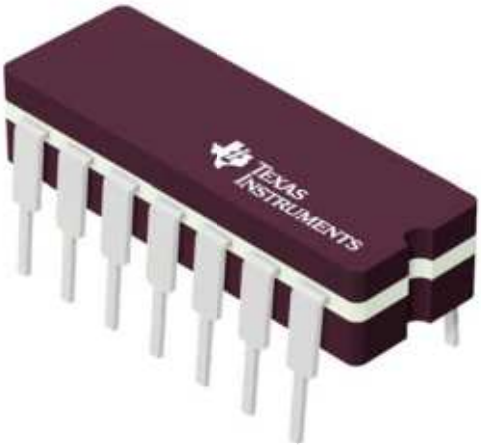

Images above are just a representation of the package family, actual package may vary.
Refer to the product data sheet for package details.

4040083-5/G

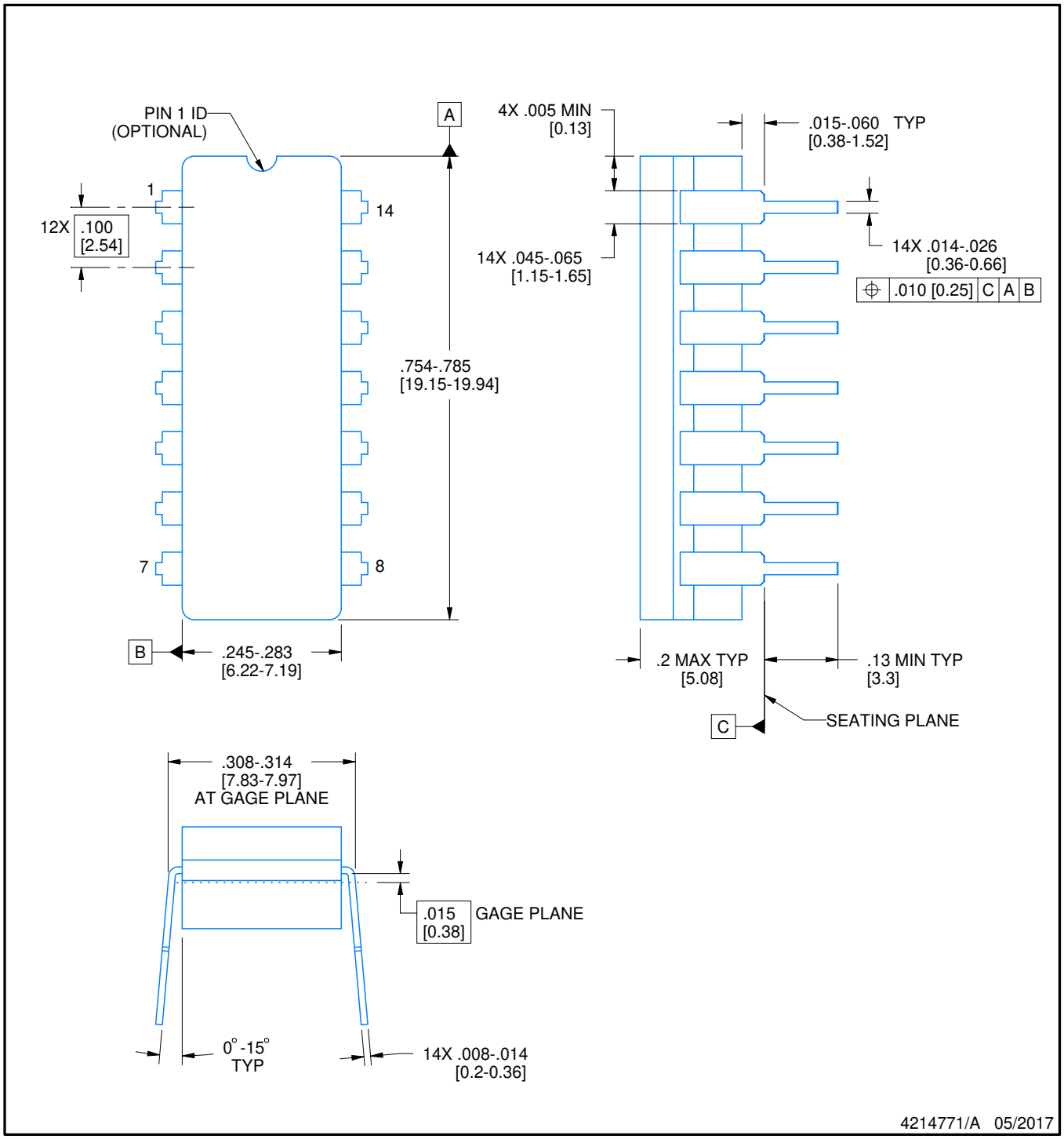

NOTES:

1. All controlling linear dimensions are in inches. Dimensions in brackets are in millimeters. Any dimension in brackets or parenthesis are for reference only. Dimensioning and tolerancing per ASME Y14.5M.
2. This drawing is subject to change without notice.
3. This package is hermitically sealed with a ceramic lid using glass frit.
4. Index point is provided on cap for terminal identification only and on press ceramic glass frit seal only.
5. Falls within MIL-STD-1835 and GDIP1-T14.

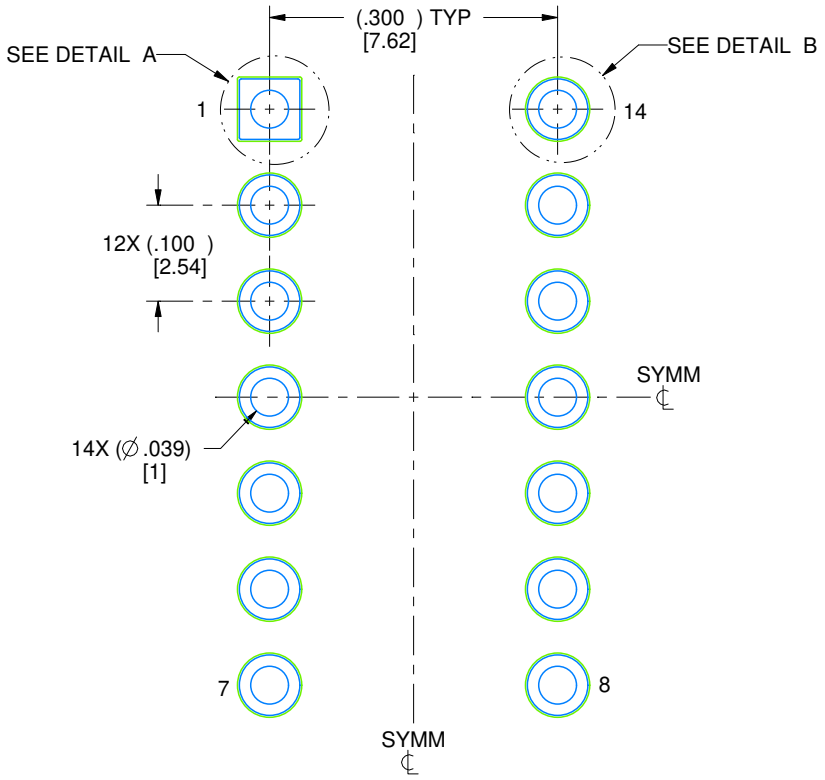

LAND PATTERN EXAMPLE
NON-SOLDER MASK DEFINED
SCALE: 5X

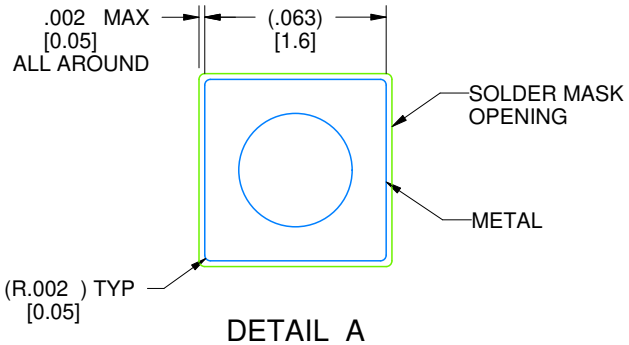

DETAIL A
SCALE: 15X

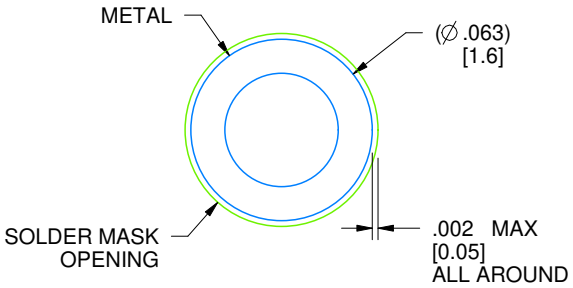

DETAIL B
13X, SCALE: 15X

4214771/A 05/2017

N (R–PDIP–T**) PLASTIC DUAL–IN–LINE PACKAGE

16 PINS SHOWN

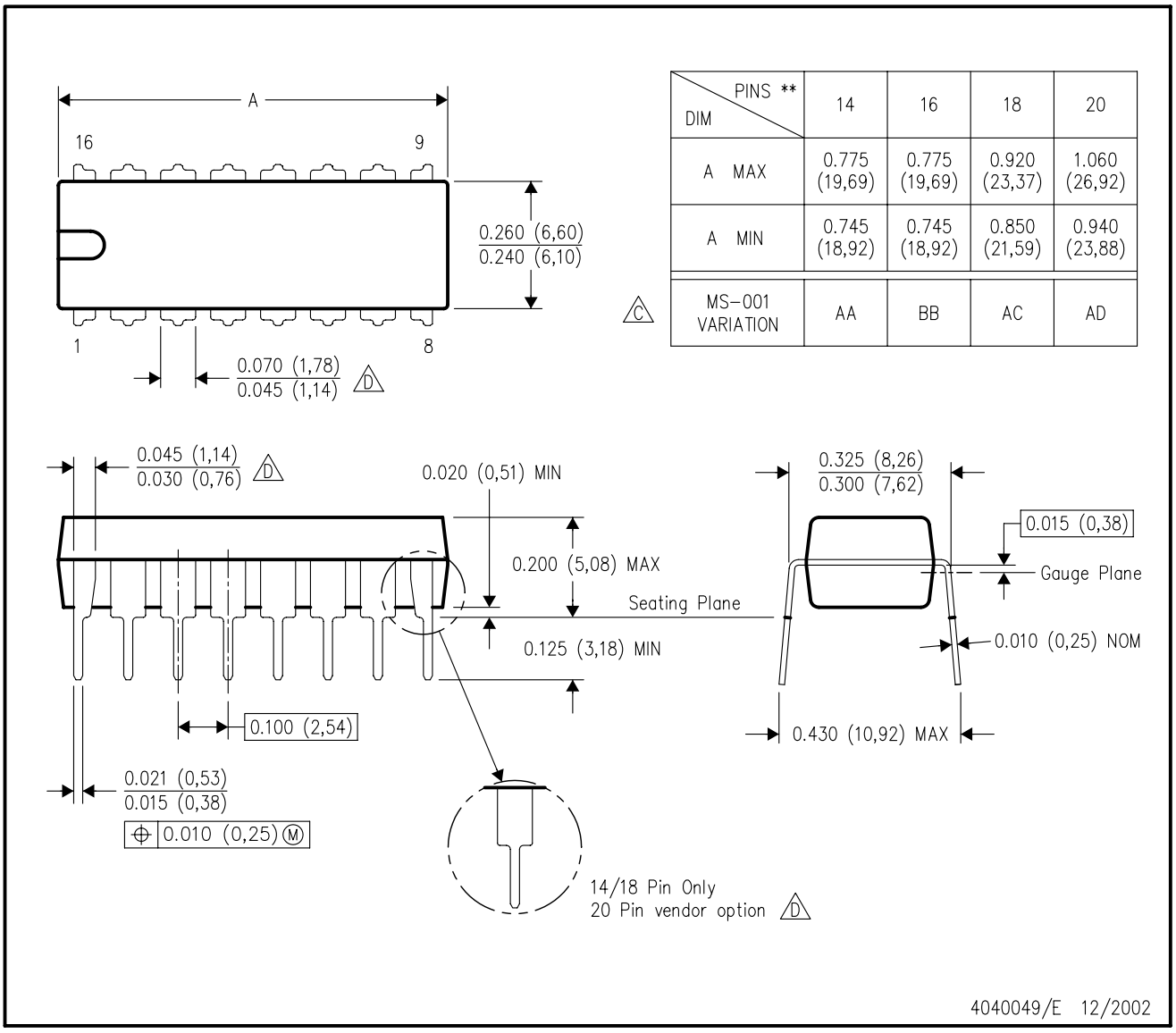

DIM \ PINS **	14	16	18	20
A MAX	0.775 (19,69)	0.775 (19,69)	0.920 (23,37)	1.060 (26,92)
A MIN	0.745 (18,92)	0.745 (18,92)	0.850 (21,59)	0.940 (23,88)
MS–001 VARIATION (C)	AA	BB	AC	AD

NOTES:
A. All linear dimensions are in inches (millimeters).
B. This drawing is subject to change without notice.
C. Falls within JEDEC MS–001, except 18 and 20 pin minimum body length (Dim A).
D. The 20 pin end lead shoulder width is a vendor option, either half or full width.

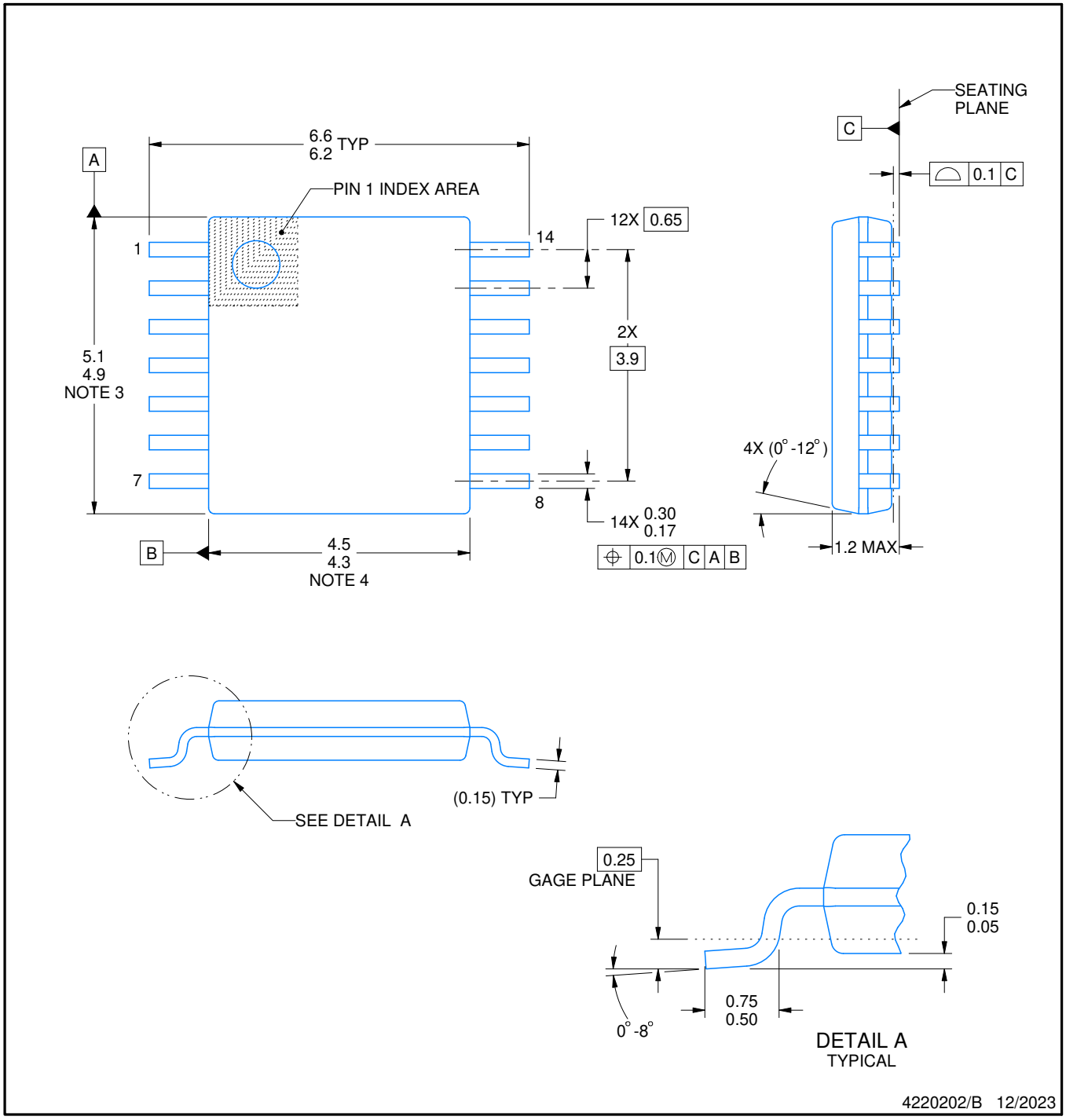

NOTES:

1. All linear dimensions are in millimeters. Any dimensions in parenthesis are for reference only. Dimensioning and tolerancing per ASME Y14.5M.
2. This drawing is subject to change without notice.
3. This dimension does not include mold flash, protrusions, or gate burrs. Mold flash, protrusions, or gate burrs shall not exceed 0.15 mm per side.
4. This dimension does not include interlead flash. Interlead flash shall not exceed 0.25 mm per side.
5. Reference JEDEC registration MO-153.

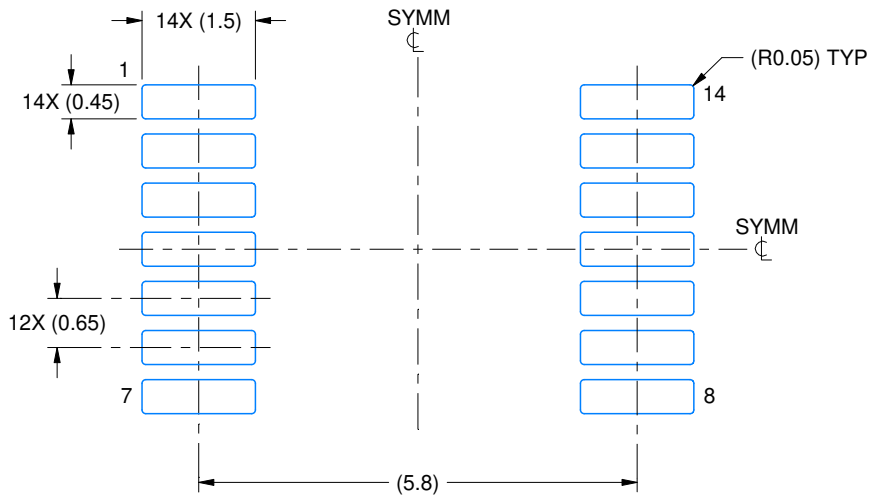

LAND PATTERN EXAMPLE
EXPOSED METAL SHOWN
SCALE: 10X

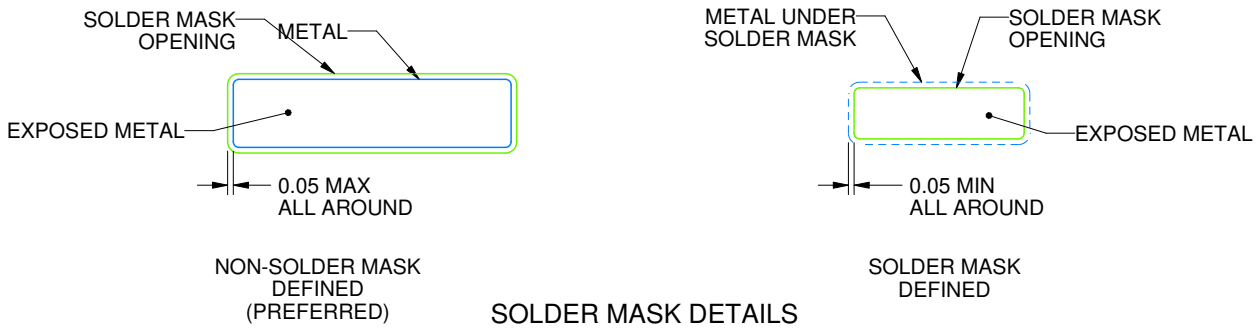

SOLDER MASK DETAILS

4220202/B 12/2023

NOTES: (continued)

6. Publication IPC-7351 may have alternate designs.
7. Solder mask tolerances between and around signal pads can vary based on board fabrication site.

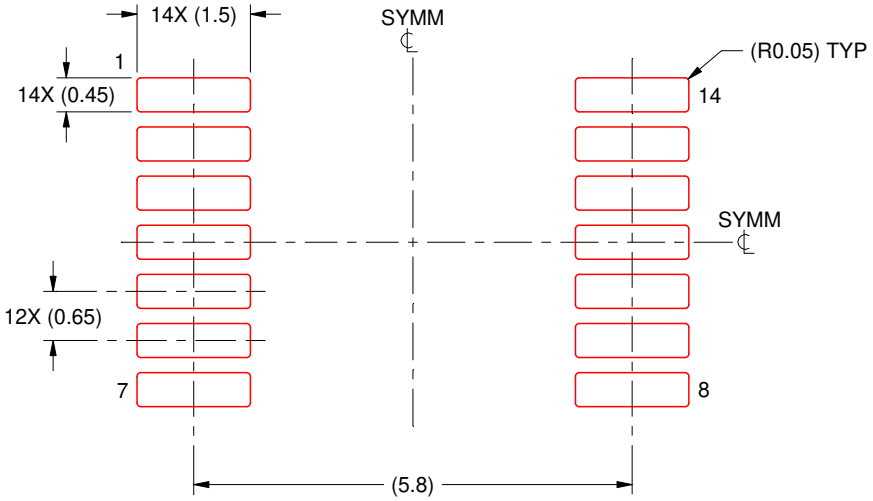

SOLDER PASTE EXAMPLE
BASED ON 0.125 mm THICK STENCIL
SCALE: 10X

4220202/B 12/2023

NOTES: (continued)

8. Laser cutting apertures with trapezoidal walls and rounded corners may offer better paste release. IPC-7525 may have alternate design recommendations.
9. Board assembly site may have different recommendations for stencil design.

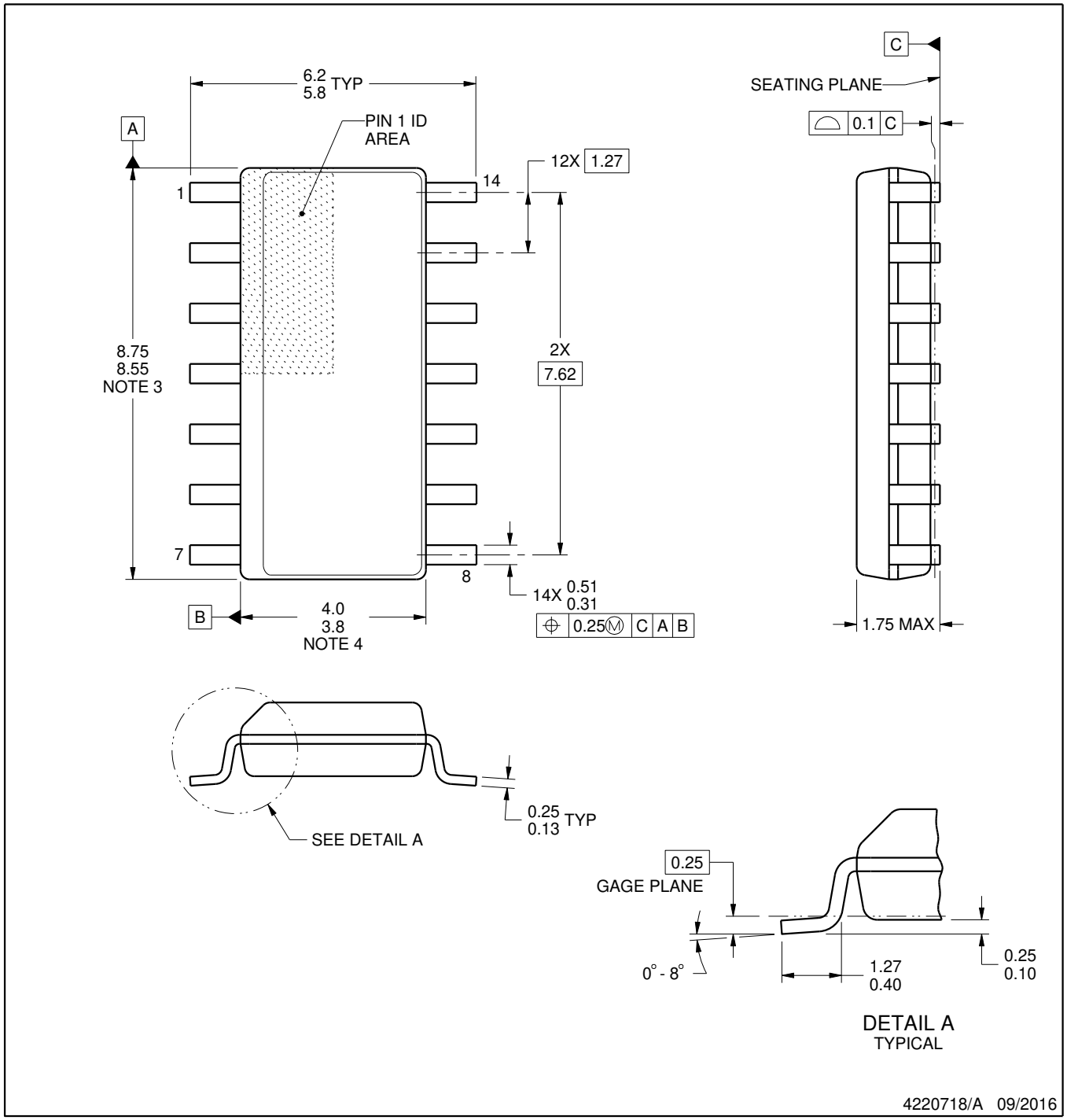

NOTES:

1. All linear dimensions are in millimeters. Dimensions in parenthesis are for reference only. Dimensioning and tolerancing per ASME Y14.5M.
2. This drawing is subject to change without notice.
3. This dimension does not include mold flash, protrusions, or gate burrs. Mold flash, protrusions, or gate burrs shall not exceed 0.15 mm, per side.
4. This dimension does not include interlead flash. Interlead flash shall not exceed 0.43 mm, per side.
5. Reference JEDEC registration MS-012, variation AB.

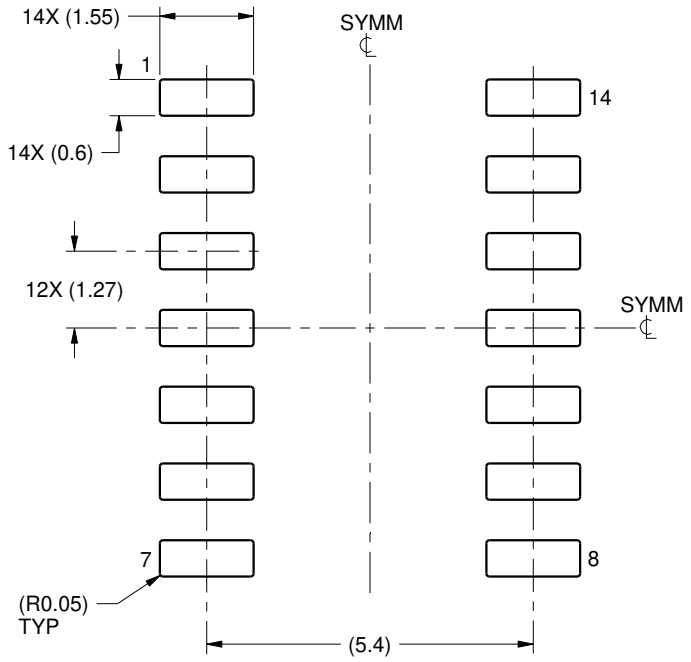

LAND PATTERN EXAMPLE
SCALE:8X

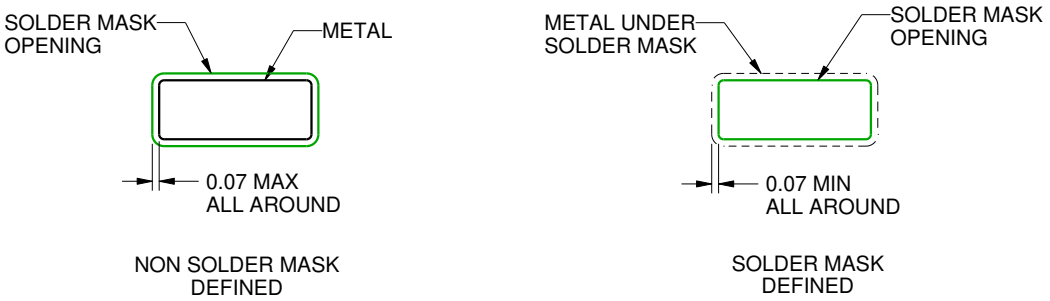

SOLDER MASK DETAILS

4220718/A 09/2016

NOTES: (continued)

6. Publication IPC-7351 may have alternate designs.
7. Solder mask tolerances between and around signal pads can vary based on board fabrication site.

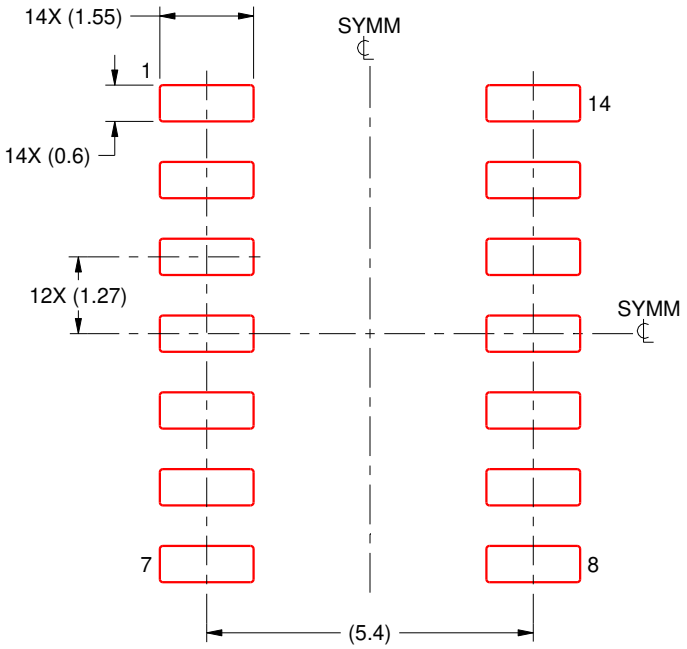

SOLDER PASTE EXAMPLE
BASED ON 0.125 mm THICK STENCIL
SCALE:8X

4220718/A 09/2016

NOTES: (continued)

8. Laser cutting apertures with trapezoidal walls and rounded corners may offer better paste release. IPC-7525 may have alternate design recommendations.
9. Board assembly site may have different recommendations for stencil design.

MECHANICAL DATA

NS (R-PDSO-G)** **PLASTIC SMALL-OUTLINE PACKAGE**

14-PINS SHOWN

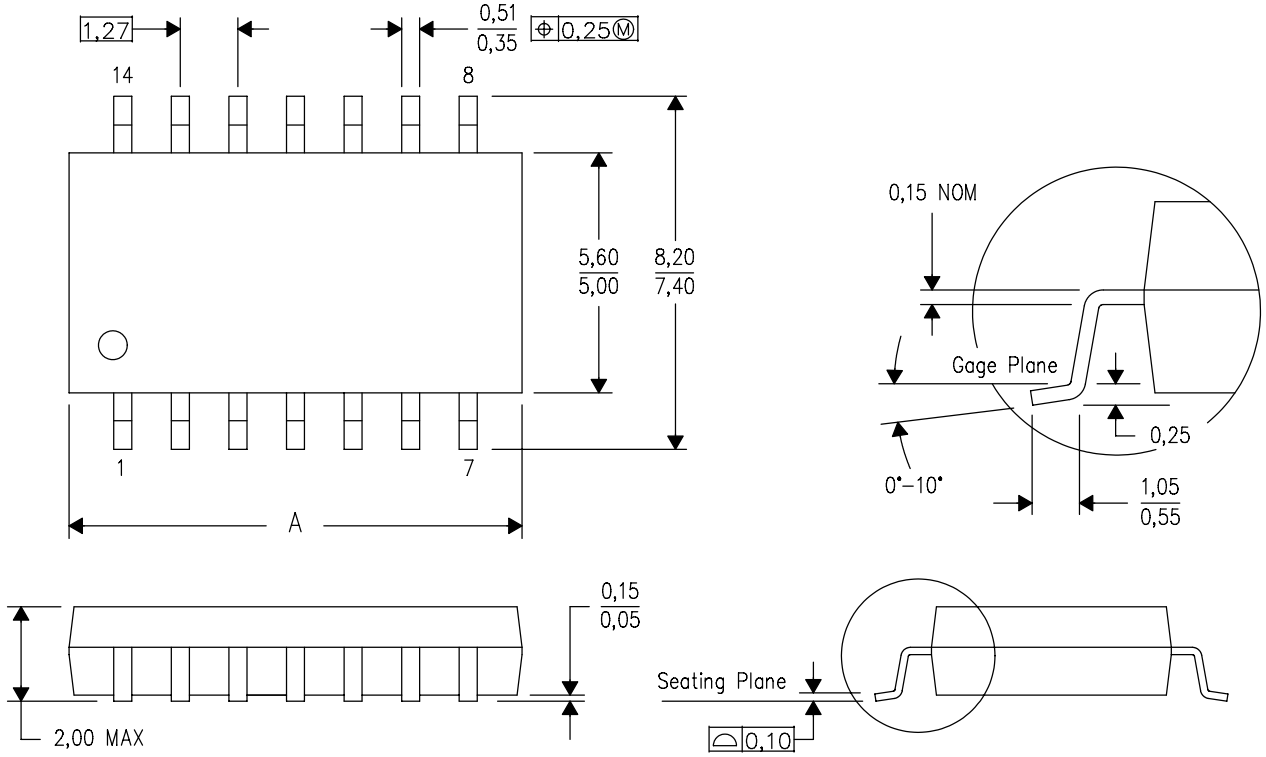

DIM \ PINS **	14	16	20	24
A MAX	10,50	10,50	12,90	15,30
A MIN	9,90	9,90	12,30	14,70

4040062/C 03/03

NOTES:
A. All linear dimensions are in millimeters.
B. This drawing is subject to change without notice.
C. Body dimensions do not include mold flash or protrusion, not to exceed 0,15.

IMPORTANT NOTICE AND DISCLAIMER

TI PROVIDES TECHNICAL AND RELIABILITY DATA (INCLUDING DATASHEETS), DESIGN RESOURCES (INCLUDING REFERENCE DESIGNS), APPLICATION OR OTHER DESIGN ADVICE, WEB TOOLS, SAFETY INFORMATION, AND OTHER RESOURCES “AS IS” AND WITH ALL FAULTS, AND DISCLAIMS ALL WARRANTIES, EXPRESS AND IMPLIED, INCLUDING WITHOUT LIMITATION ANY IMPLIED WARRANTIES OF MERCHANTABILITY, FITNESS FOR A PARTICULAR PURPOSE OR NON-INFRINGEMENT OF THIRD PARTY INTELLECTUAL PROPERTY RIGHTS.

These resources are intended for skilled developers designing with TI products. You are solely responsible for (1) selecting the appropriate TI products for your application, (2) designing, validating and testing your application, and (3) ensuring your application meets applicable standards, and any other safety, security, regulatory or other requirements.

These resources are subject to change without notice. TI grants you permission to use these resources only for development of an application that uses the TI products described in the resource. Other reproduction and display of these resources is prohibited. No license is granted to any other TI intellectual property right or to any third party intellectual property right. TI disclaims responsibility for, and you fully indemnify TI and its representatives against any claims, damages, costs, losses, and liabilities arising out of your use of these resources.

TI’s products are provided subject to TI’s Terms of Sale, TI’s General Quality Guidelines, or other applicable terms available either on ti.com or provided in conjunction with such TI products. TI’s provision of these resources does not expand or otherwise alter TI’s applicable warranties or warranty disclaimers for TI products. Unless TI explicitly designates a product as custom or customer-specified, TI products are standard, catalog, general purpose devices.

TI objects to and rejects any additional or different terms you may propose.

Copyright © 2026, Texas Instruments Incorporated

Last updated 10/2025