LM290xLV Industry Standard, Low Voltage Operational Amplifiers

1 Features

- Industry standard amplifier for cost-sensitive systems
- Low input offset voltage: ±1 mV
- Common-mode voltage range includes ground
- Unity-gain bandwidth: 1 MHz
- Low broadband noise: 40 nV/√Hz
- Low quiescent current: 90 µA/Ch
- Unity-gain stable
- Operational at supply voltages from 2.7 V to 5.5 V
- Offered in dual- and quad-channel variants
- Robust ESD specification: 2-kV HBM
- Extended temperature range: –40°C to 125°C

2 Applications

- Cordless appliances
- Uninterruptible power supply
- Battery pack, charger, and test equipment
- Power supply modules
- Environmental sensors signal conditioning
- Field transmitter: temperature sensors
- Oscilloscopes, digital multimeters, and signal analyzers
- Rack mount server
- HVAC: heating, ventilating, and air conditioning
- DC motor control
- Low-side current sensing

3 Description

The LM290xLV family includes the dual LM2904LV and quad LM2902LV operational amplifiers, or op amps. The devices operate from a low voltage of 2.7 V to 5.5 V.

These op amps supply an alternative to the LM2904 and LM2902 in low-voltage applications that are sensitive to cost. Some applications are large appliances, smoke detectors, and personal electronics. The LM290xLV devices supply better performance than the LM290x devices at low voltage, and have lower power consumption. The op amps are stable at unity gain, and do not have reverse phase in overdrive conditions. The design for ESD gives the LM290xLV family an HBM specification for a minimum of 2 kV.

The LM290xLV family is available in packages that have industry standards. The packages include SOIC, VSSOP, and TSSOP packages.

Device Information

PART NUMBER(1)	PACKAGE	BODY SIZE (NOM)
LM2902LV	SOIC (14)	8.65 mm × 3.91 mm
	TSSOP (14)	4.40 mm × 5.00 mm
	SOT-23 (14)	4.20 mm × 2.00 mm
LM2904LV	SOIC (8)	3.91 mm × 4.90 mm
	TSSOP (8)	3.00 mm × 4.40 mm
	SOT-23 (8)	1.60 mm × 2.90 mm
	VSSOP (8)	3.00 mm × 3.00 mm

(1) For all available packages, see the orderable addendum at the end of the data sheet.

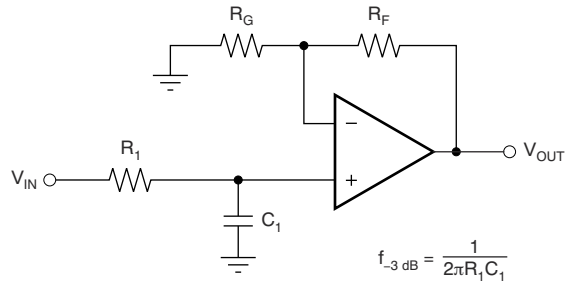

$$\frac{V_{OUT}}{V_{IN}} = \left(1 + \frac{R_F}{R_G}\right)\left(\frac{1}{1 + sR_1C_1}\right)$$

Single-Pole, Low-Pass Filter

An IMPORTANT NOTICE at the end of this data sheet addresses availability, warranty, changes, use in safety-critical applications, intellectual property matters and other important disclaimers. PRODUCTION DATA.

Table of Contents

1 Features....1
2 Applications....1
3 Description....1
4 Revision History....2
5 Pin Configuration and Functions....3
6 Specifications....5
6.1 Absolute Maximum Ratings....5
6.2 ESD Ratings....5
6.3 Recommended Operating Conditions....5
6.4 Thermal Information: LM2904LV....5
6.5 Thermal Information: LM2902LV....6
6.6 Electrical Characteristics....6
6.7 Typical Characteristics....8
7 Detailed Description....13
7.1 Overview....13
7.2 Functional Block Diagram....13
7.3 Feature Description....13
7.4 Device Functional Modes....14
8 Application and Implementation....15
8.1 Application Information....15
8.2 Typical Application....15
9 Power Supply Recommendations....17
9.1 Input and ESD Protection....17
10 Layout....18
10.1 Layout Guidelines....18
10.2 Layout Example....18
11 Device and Documentation Support....19
11.1 Documentation Support....19
11.2 Receiving Notification of Documentation Updates....19
11.3 Support Resources....19
11.4 Trademarks....19
11.5 Electrostatic Discharge Caution....19
11.6 Glossary....19
12 Mechanical, Packaging, and Orderable Information....19

4 Revision History

NOTE: Page numbers for previous revisions may differ from page numbers in the current version.

Changes from Revision B (October 2019) to Revision C (February 2022)	Page
• Updated the numbering format for tables, figures, and cross-references throughout the document	1
• Added SOT-23 (DYY) package to Device Information table	1
• Added DYY (SOT-23) package to *Pin Configuration and Functions* section	3
• Added DYY (SOT-23) package to *Thermal Information: LM2902LV* section	6

Changes from Revision A (May 2019) to Revision B (October 2019)	Page
• Deleted all SOT-23 (DDF) preview notations	1

Changes from Revision * (September 2018) to Revision A (May 2019)	Page
• Added SOT-23 (DDF) package to Device Information table	1
• Added DDF (SOT-23) package to *Pin Configuration and Functions* section	3
• Added DDF (SOT-23) *Thermal Information: LM2904LV* section	5

Copyright © 2022 Texas Instruments Incorporated

5 Pin Configuration and Functions

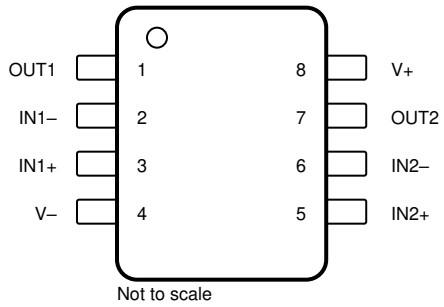

Figure 5-1. LM2904LV D, DGK, PW, and DDF Package 8-Pin SOIC, VSSOP, TSSOP, and SOT-23 (Top View)

Table 5-1. Pin Functions: LM2904LV

PIN		I/O	DESCRIPTION
NAME	NO.		
IN1–	2	I	Inverting input, channel 1
IN1+	3	I	Noninverting input, channel 1
IN2–	6	I	Inverting input, channel 2
IN2+	5	I	Noninverting input, channel 2
OUT1	1	O	Output, channel 1
OUT2	7	O	Output, channel 2
V–	4	I or —	Negative (low) supply or ground (for single-supply operation)
V+	8	I	Positive (high) supply

Copyright © 2022 Texas Instruments Incorporated

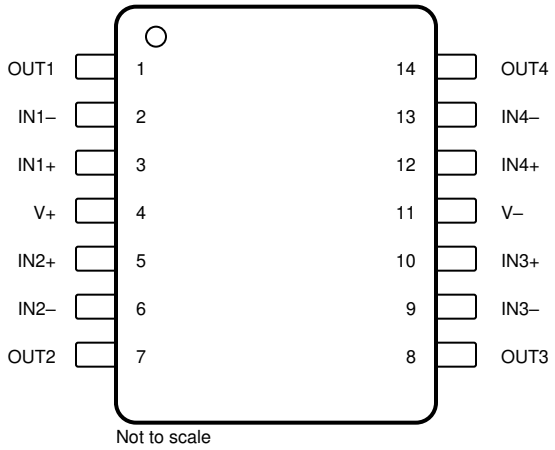

Figure 5-2. LM2902LV D, PW, DYY and Package 14-Pin SOIC, TSSOP, and SOT-23 (Top View)

Table 5-2. Pin Functions: LM2902LV

PIN		I/O	DESCRIPTION
NAME	NO.		
IN1–	2	I	Inverting input, channel 1
IN1+	3	I	Noninverting input, channel 1
IN2–	6	I	Inverting input, channel 2
IN2+	5	I	Noninverting input, channel 2
IN3–	9	I	Inverting input, channel 3
IN3+	10	I	Noninverting input, channel 3
IN4–	13	I	Inverting input, channel 4
IN4+	12	I	Noninverting input, channel 4
OUT1	1	O	Output, channel 1
OUT2	7	O	Output, channel 2
OUT3	8	O	Output, channel 3
OUT4	14	O	Output, channel 4
V–	11	I or —	Negative (low) supply or ground (for single-supply operation)
V+	4	I	Positive (high) supply

Copyright © 2022 Texas Instruments Incorporated

6 Specifications

6.1 Absolute Maximum Ratings

over operating junction temperature range (unless otherwise noted)[1]

			MIN	MAX	UNIT
Supply voltage, ([V+] – [V–])			0	6	V
Signal input pins	Voltage[2]	Common-mode	(V–) – 0.5	(V+) + 0.5	V
		Differential		(V+) – (V–) + 0.2	V
	Current[2]		–10	10	mA
Output short-circuit[3]			Continuous		
Operating, T_A			–55	125	°C
Operating junction temperature, T_J				150	°C
Storage temperature, T_{stg}			–65	150	°C

(1) Stresses beyond those listed under *Absolute Maximum Ratings* may cause permanent damage to the device. These are stress ratings only, which do not imply functional operation of the device at these or any other conditions beyond those indicated under *Recommended Operating Conditions*. Exposure to absolute-maximum-rated conditions for extended periods may affect device reliability.
(2) Input pins are diode-clamped to the power-supply rails. Input signals that may swing more than 0.5 V beyond the supply rails must be current limited to 10 mA or less.
(3) Short-circuit to ground, one amplifier per package.

6.2 ESD Ratings

			VALUE	UNIT
$V_{(ESD)}$	Electrostatic discharge	Human-body model (HBM), per ANSI/ESDA/JEDEC JS-001[1]	±2000	V
		Charged-device model (CDM), per JEDEC specification JESD22-C101[2]	±1000	

(1) JEDEC document JEP155 states that 500-V HBM allows safe manufacturing with a standard ESD control process.
(2) JEDEC document JEP157 states that 250-V CDM allows safe manufacturing with a standard ESD control process.

6.3 Recommended Operating Conditions

over operating junction temperature range (unless otherwise noted)

		MIN	MAX	UNIT
V_S	Supply voltage [(V+) – (V–)]	2.7	5.5	V
V_{IN}	Input-pin voltage range	(V–) – 0.1	(V+) – 1	V
T_A	Specified temperature	–40	125	°C

6.4 Thermal Information: LM2904LV

THERMAL METRIC[1]		LM2904LV				UNIT
		D (SOIC)	DGK (VSSOP)	PW (TSSOP)	DDF (SOT-23)	
		8 PINS	8 PINS	8 PINS	8 PINS	
$R_{\theta JA}$	Junction-to-ambient thermal resistance	207.9	201.2	200.7	183.7	°C/W
$R_{\theta JC(top)}$	Junction-to-case (top) thermal resistance	92.8	85.7	95.4	112.5	°C/W
$R_{\theta JB}$	Junction-to-board thermal resistance	129.7	122.9	128.6	98.2	°C/W
ψ_{JT}	Junction-to-top characterization parameter	26	21.2	27.2	18.8	°C/W
ψ_{JB}	Junction-to-board characterization parameter	127.9	121.4	127.2	97.6	°C/W

(1) For more information about traditional and new thermal metrics, see *Semiconductor and IC Package Thermal Metrics*.

Copyright © 2022 Texas Instruments Incorporated

6.5 Thermal Information: LM2902LV

THERMAL METRIC[1]		LM2902LV			UNIT
		D (SOIC)	PW (TSSOP)	DYY (SOT-23)	
		14 PINS	14 PINS	14 PINS	
$R_{\theta JA}$	Junction-to-ambient thermal resistance	102.1	148.3	154.6	°C/W
$R_{\theta JC(top)}$	Junction-to-case (top) thermal resistance	56.8	68.1	86.3	°C/W
$R_{\theta JB}$	Junction-to-board thermal resistance	58.5	92.7	67.3	°C/W
ψ_{JT}	Junction-to-top characterization parameter	20.5	16.9	9.8	°C/W
ψ_{JB}	Junction-to-board characterization parameter	58.1	91.8	67.1	°C/W

(1) For more information about traditional and new thermal metrics, see *Semiconductor and IC Package Thermal Metrics*.

6.6 Electrical Characteristics

For V_S = (V+) – (V–) = 2.7 V to 5.5 V (±1.35 V to ±2.75 V), T_A = 25°C, R_L = 10 kΩ connected to V_S / 2, and V_{CM} = V_{OUT} = V_S / 2 (unless otherwise noted)

PARAMETER		TEST CONDITIONS	MIN	TYP	MAX	UNIT
OFFSET VOLTAGE						
V_{OS}	Input offset voltage	V_S = 5 V		±1	±3	mV
		V_S = 5 V, T_A = –40°C to 125°C			±5	
dV_{OS}/dT	V_{OS} vs temperature	T_A = –40°C to 125°C		±4		μV/°C
PSRR	Power-supply rejection ratio	V_S = 2.7 V to 5.5 V, V_{CM} = (V–)	80	100		dB
INPUT VOLTAGE RANGE						
V_{CM}	Common-mode voltage range	No phase reversal	(V–) – 0.1		(V+) – 1	V
CMRR	Common-mode rejection ratio	V_S = 2.7 V, (V–) – 0.1 V < V_{CM} < (V+) – 1 V T_A = –40°C to 125°C		84		dB
		V_S = 5.5 V, (V–) – 0.1 V < V_{CM} < (V+) – 1 V T_A = –40°C to 125°C	63	92		
INPUT BIAS CURRENT						
I_B	Input bias current	V_S = 5 V		±15		pA
I_{OS}	Input offset current			±5		pA
NOISE						
E_n	Input voltage noise (peak-to-peak)	f = 0.1 Hz to 10 Hz, V_S = 5 V		5.1		μV_{PP}
e_n	Input voltage noise density	f = 1 kHz, V_S = 5 V		40		nV/√Hz
INPUT CAPACITANCE						
C_{ID}	Differential			2		pF
C_{IC}	Common-mode			5.5		pF
OPEN-LOOP GAIN						
A_{OL}	Open-loop voltage gain	V_S = 2.7 V, (V–) + 0.15 V < V_O < (V+) – 0.15 V, R_L = 2 kΩ		110		dB
		V_S = 5.5 V, (V–) + 0.15 V < V_O < (V+) – 0.15 V, R_L = 2 kΩ		125		
FREQUENCY RESPONSE						
GBW	Gain-bandwidth product	V_S = 5 V		1		MHz
φ_m	Phase margin	V_S = 5.5 V, G = 1		75		°
SR	Slew rate	V_S = 5 V		1.5		V/μs
t_S	Settling time	To 0.1%, V_S = 5 V, 2-V step, G = 1, C_L = 100 pF		4		μs
		To 0.01%, V_S = 5 V, 2-V step, G = 1, C_L = 100 pF		5		
t_{OR}	Overload recovery time	V_S = 5 V, V_{IN} × gain > V_S		1		μs
THD+N	Total harmonic distortion + noise	V_S = 5.5 V, V_{CM} = 2.5 V, V_O = 1 V_{RMS}, G = 1, f = 1 kHz, 80-kHz measurement BW		0.005%		
OUTPUT						
V_{OH}	Voltage output swing from positive supply	R_L ≥ 2 kΩ, T_A = –40°C to 125°C	1			V
V_{OL}	Voltage output swing from negative supply	R_L ≤ 10 kΩ, T_A = –40°C to 125°C		40	75	mV
I_{SC}	Short-circuit current	V_S = 5.5 V		±40		mA
Z_O	Open-loop output impedance	V_S = 5 V, f = 1 MHz		1200		Ω

Copyright © 2022 Texas Instruments Incorporated

6.6 Electrical Characteristics (continued)

For V_S = (V+) – (V–) = 2.7 V to 5.5 V (±1.35 V to ±2.75 V), T_A = 25°C, R_L = 10 kΩ connected to V_S / 2, and V_{CM} = V_{OUT} = V_S / 2 (unless otherwise noted)

PARAMETER		TEST CONDITIONS	MIN	TYP	MAX	UNIT
POWER SUPPLY						
V_S	Specified voltage range		2.7 (±1.35)		5.5 (±2.75)	V
I_Q	Quiescent current per amplifier	I_O = 0 mA, V_S = 5.5 V		90	150	µA
		I_O = 0 mA, V_S = 5.5 V, T_A = –40°C to 125°C			160	

6.7 Typical Characteristics

at T_A = 25°C, V+ = 2.75 V, V– = –2.75 V, R_L = 10 kΩ connected to V_S / 2, V_{CM} = V_S / 2, and V_{OUT} = V_S / 2 (unless otherwise noted)

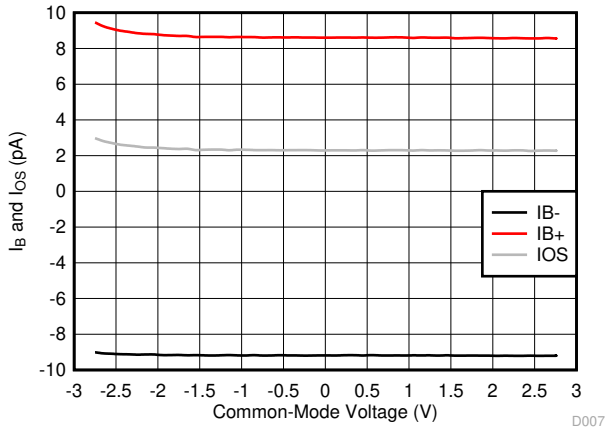

Figure 6-1. I_B and I_{OS} vs Common-Mode Voltage

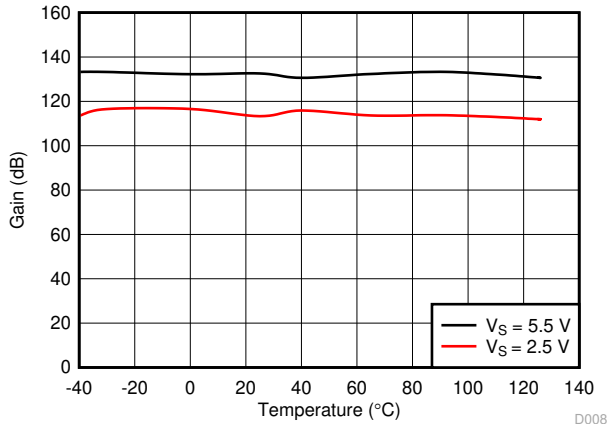

Figure 6-2. Open-Loop Gain vs Temperature

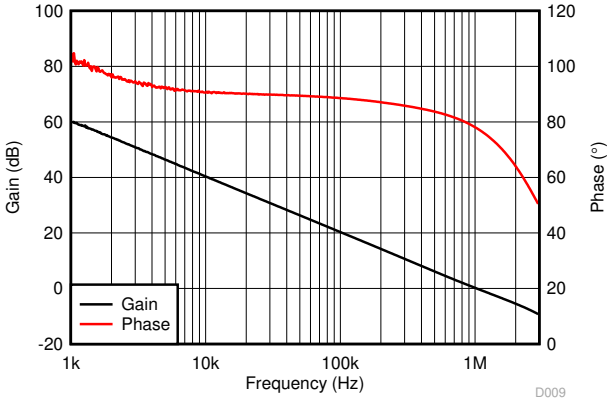

C_L = 10 pF

Figure 6-3. Open-Loop Gain and Phase vs Frequency

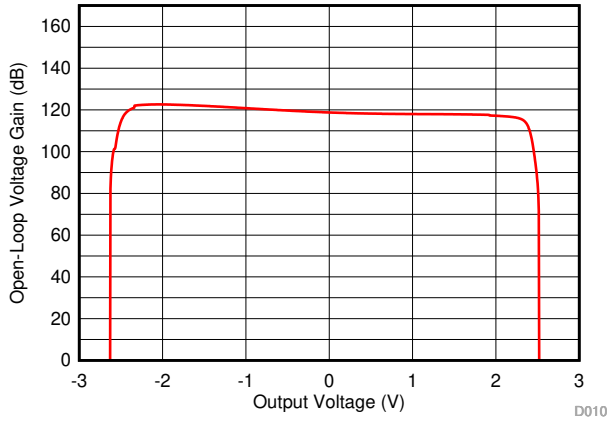

Figure 6-4. Open-Loop Gain vs Output Voltage

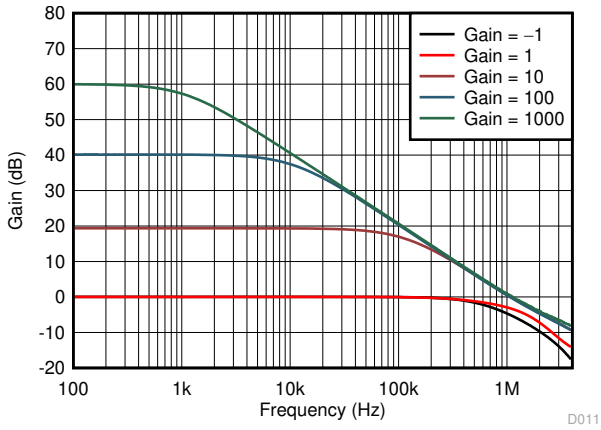

C_L = 10 pF

Figure 6-5. Closed-Loop Gain vs Frequency

Copyright © 2022 Texas Instruments Incorporated

6.7 Typical Characteristics

at T_A = 25°C, V+ = 2.75 V, V– = –2.75 V, R_L = 10 kΩ connected to V_S / 2, V_{CM} = V_S / 2, and V_{OUT} = V_S / 2 (unless otherwise noted)

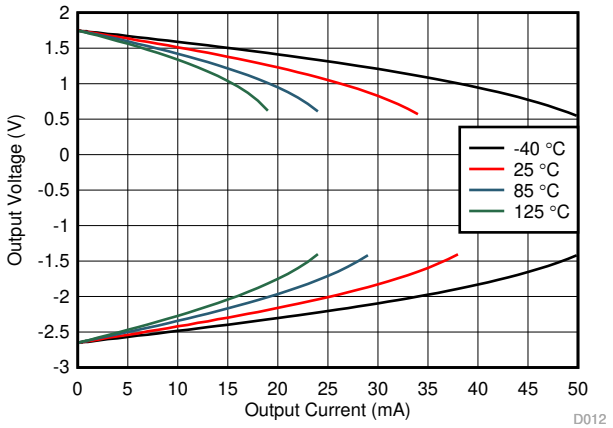

Figure 6-6. Output Voltage vs Output Current (Claw)

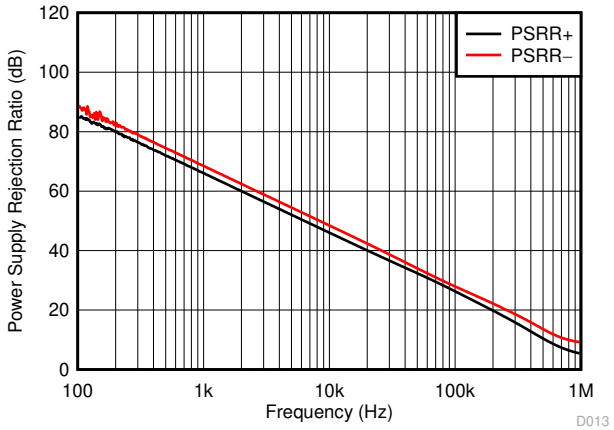

Figure 6-7. PSRR vs Frequency

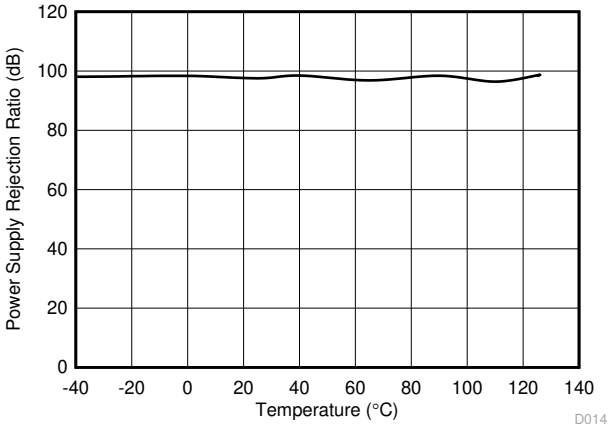

V_S = 2.7 V to 5.5 V

Figure 6-8. DC PSRR vs Temperature

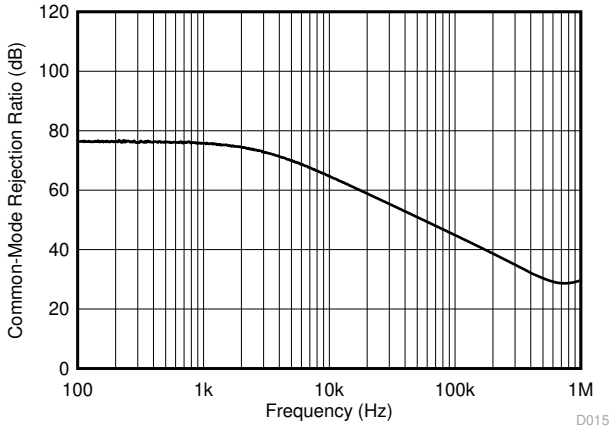

Figure 6-9. CMRR vs Frequency

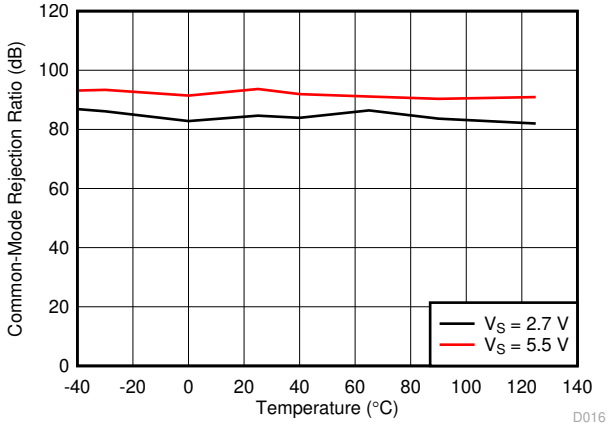

V_{CM} = (V–) – 0.1 V to (V+) – 1.5 V

Figure 6-10. DC CMRR vs Temperature

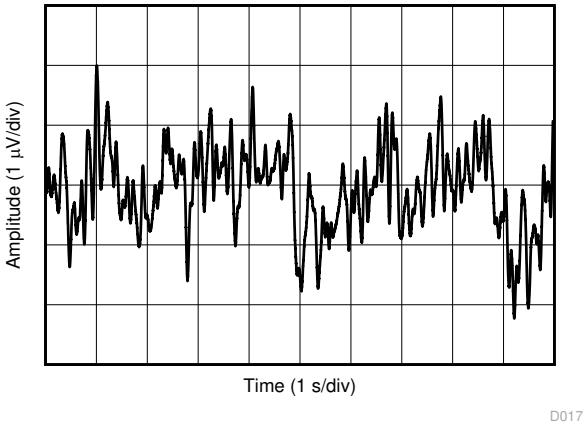

Figure 6-11. 0.1-Hz to 10-Hz Integrated Voltage Noise

6.7 Typical Characteristics

at T_A = 25°C, V+ = 2.75 V, V– = –2.75 V, R_L = 10 kΩ connected to V_S / 2, V_{CM} = V_S / 2, and V_{OUT} = V_S / 2 (unless otherwise noted)

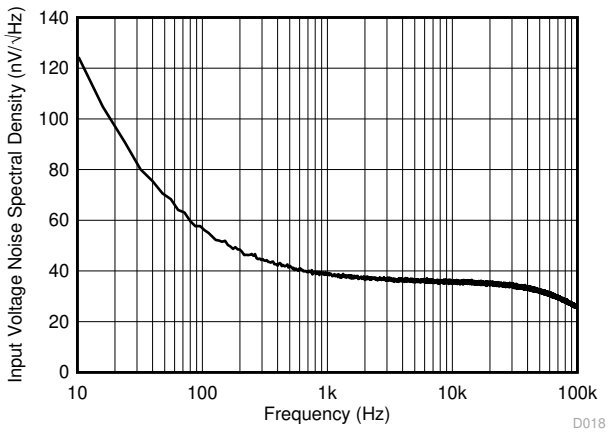

Figure 6-12. Input Voltage Noise Spectral Density

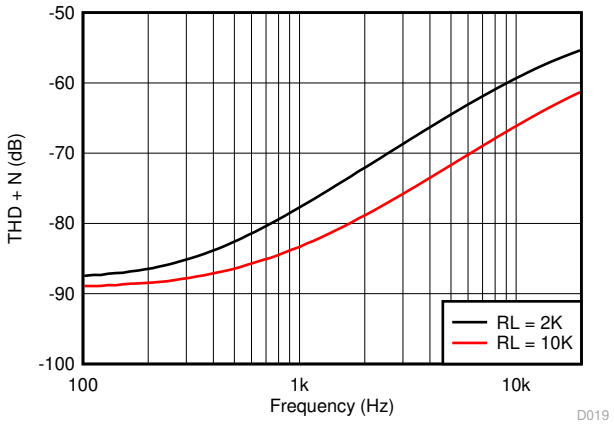

V_S = 5.5 V V_{CM} = 2.5 V G = 1
BW = 80 kHz V_{OUT} = 0.5 V_{RMS}

Figure 6-13. THD + N vs Frequency

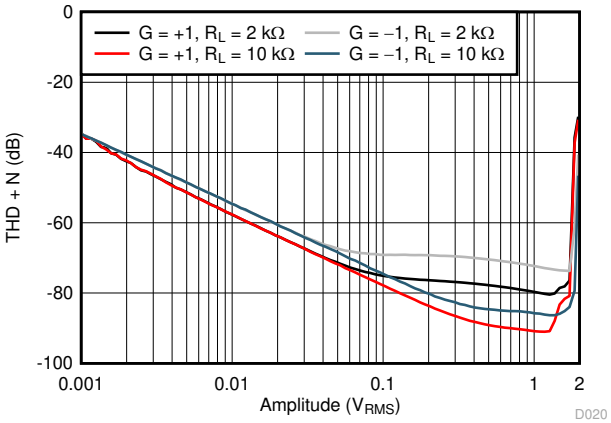

V_S = 5.5 V V_{CM} = 2.5 V f = 1 kHz
G = 1 BW = 80 kHz

Figure 6-14. THD + N vs Amplitude

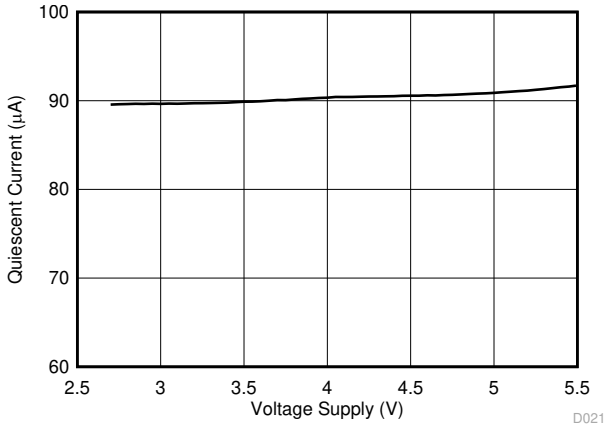

Figure 6-15. Quiescent Current vs Supply Voltage

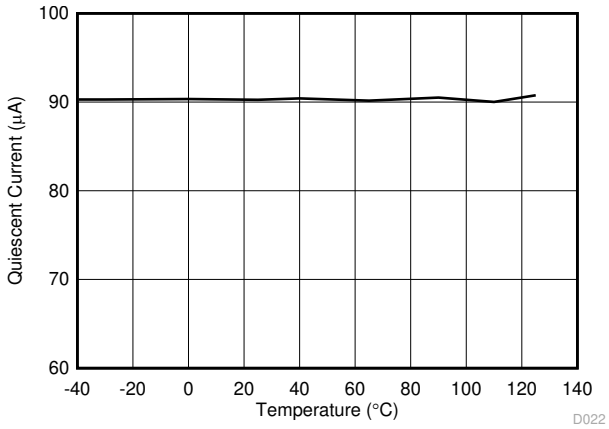

Figure 6-16. Quiescent Current vs Temperature

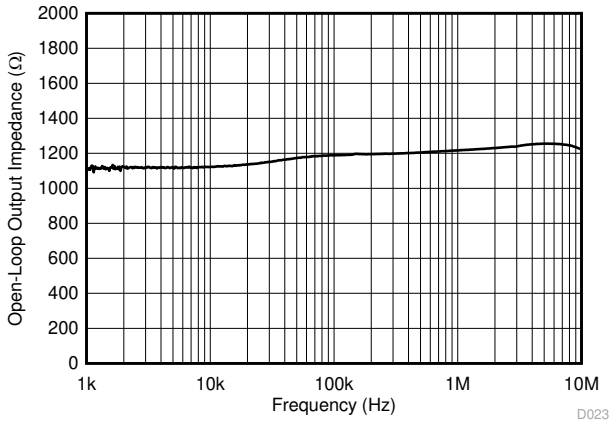

Figure 6-17. Open-Loop Output Impedance vs Frequency

Copyright © 2022 Texas Instruments Incorporated

6.7 Typical Characteristics

at T_A = 25°C, V+ = 2.75 V, V– = –2.75 V, R_L = 10 kΩ connected to V_S / 2, V_{CM} = V_S / 2, and V_{OUT} = V_S / 2 (unless otherwise noted)

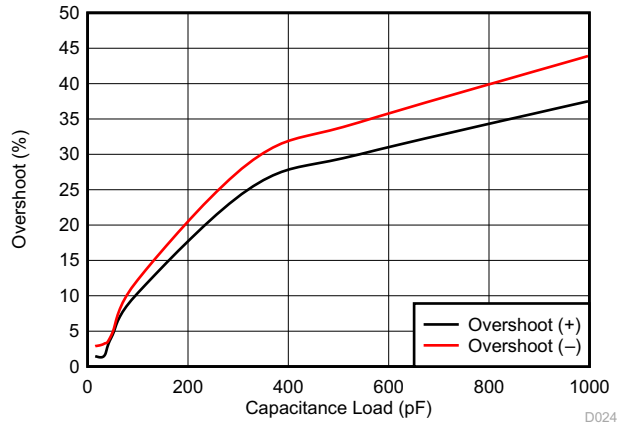

G = 1 V_{IN} = 100 mVpp

Figure 6-18. Small Signal Overshoot vs Capacitive Load

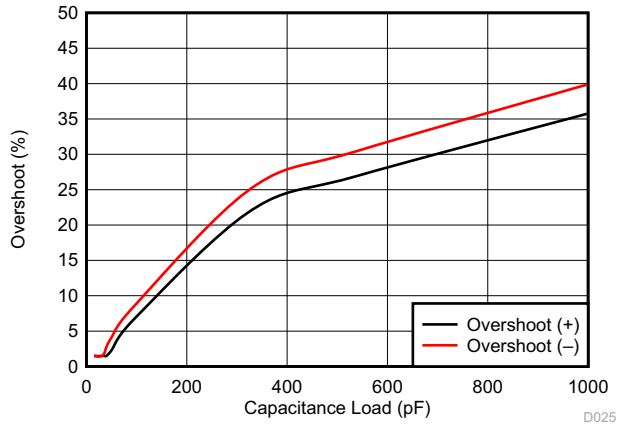

G = –1 V_{IN} = 100 mVpp

Figure 6-19. Small Signal Overshoot vs Capacitive Load

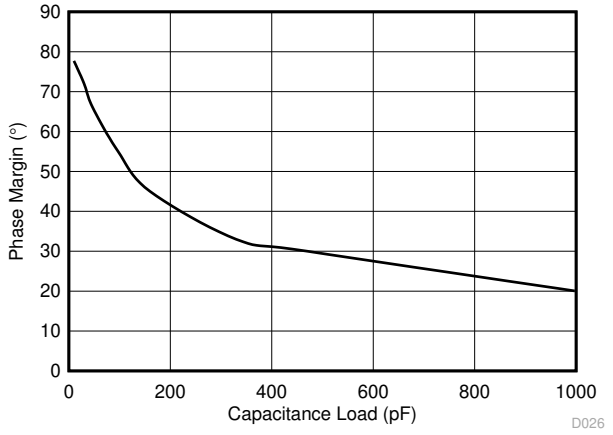

Figure 6-20. Phase Margin vs Capacitive Load

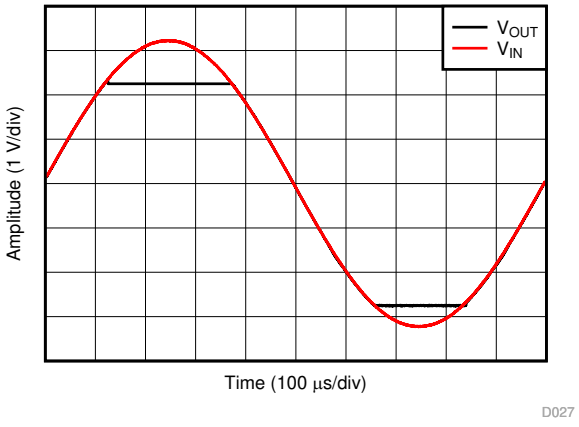

G = 1 V_{IN} = 6.5 V_{PP}

Figure 6-21. No Phase Reversal

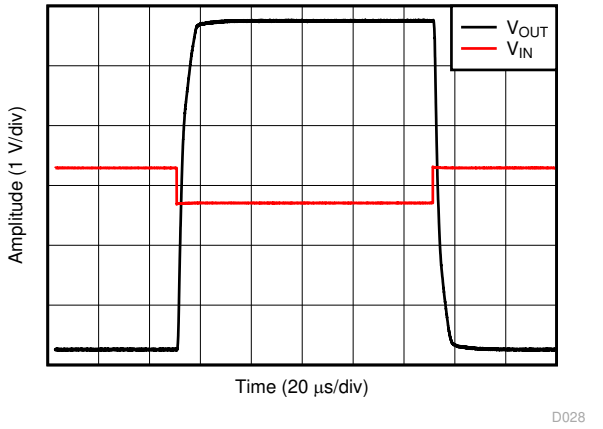

G = –10 V_{IN} = 600 mV_{PP}

Figure 6-22. Overload Recovery

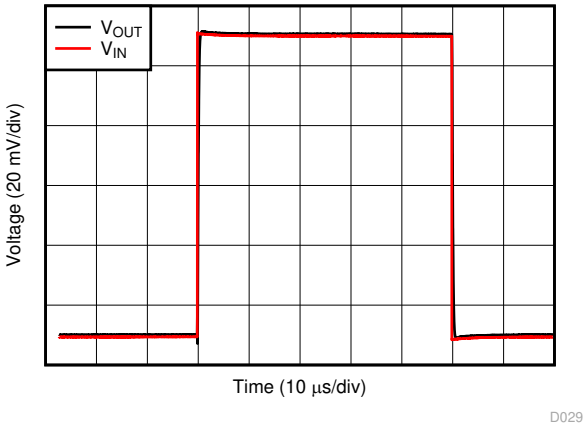

G = 1 V_{IN} = 100 mV_{PP} C_L = 10 pF

Figure 6-23. Small-Signal Step Response

6.7 Typical Characteristics (continued)

at T_A = 25°C, V+ = 2.75 V, V– = –2.75 V, R_L = 10 kΩ connected to V_S / 2, V_{CM} = V_S / 2, and V_{OUT} = V_S / 2 (unless otherwise noted)

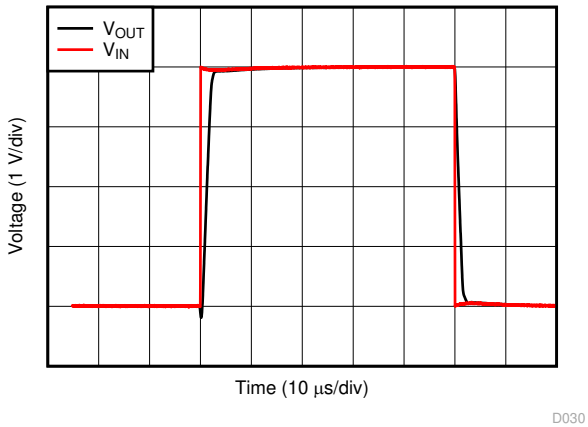

G = 1 C_L = 10 pF V_{IN} = 4 V_{PP}

Figure 6-24. Large-Signal Step Response

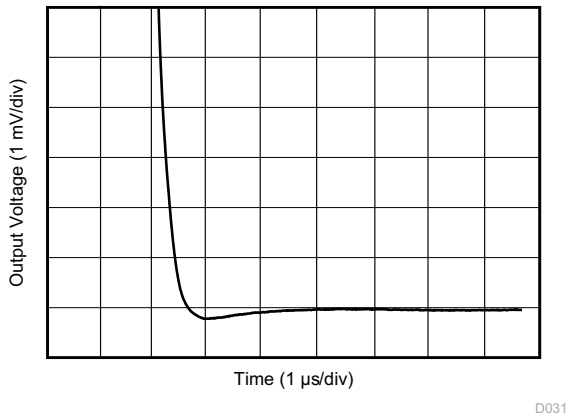

G = 1 C_L = 100 pF 2-V step

Figure 6-25. Large-Signal Settling Time (Negative)

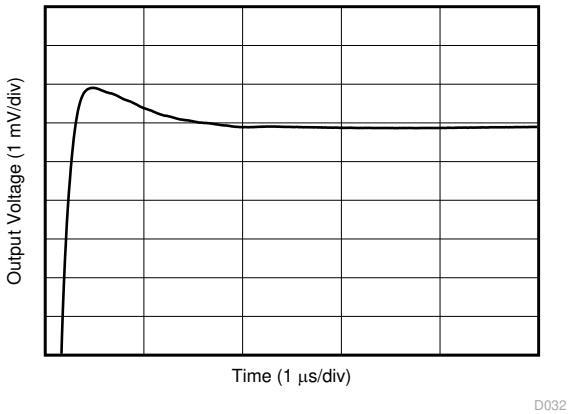

G = 1 C_L = 100 pF 2-V step

Figure 6-26. Large-Signal Settling Time (Positive)

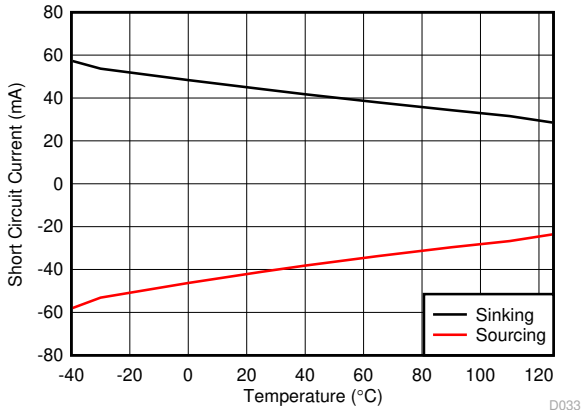

Figure 6-27. Short-Circuit Current vs Temperature

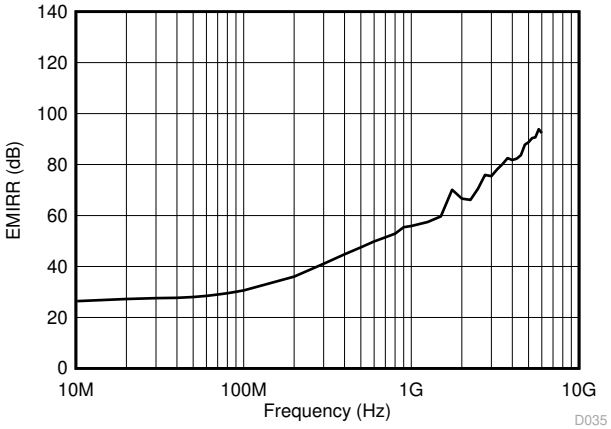

Figure 6-28. Electromagnetic Interference Rejection Ratio Referred to Noninverting Input (EMIRR+) vs Frequency

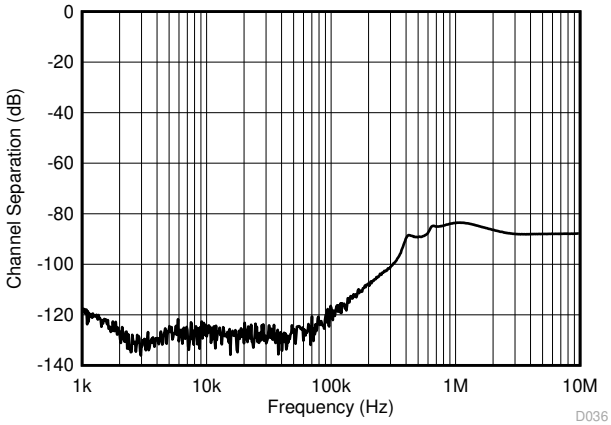

Figure 6-29. Channel Separation

Copyright © 2022 Texas Instruments Incorporated

7 Detailed Description

7.1 Overview

The LM290xLV family of low-power op amps is intended for cost-optimized systems. These devices operate from 2.7 V to 5.5 V, are unity-gain stable, and are designed for a wide range of general-purpose applications. The input common-mode voltage range includes the negative rail and allows the LM290xLV family to be used in many single-supply applications.

7.2 Functional Block Diagram

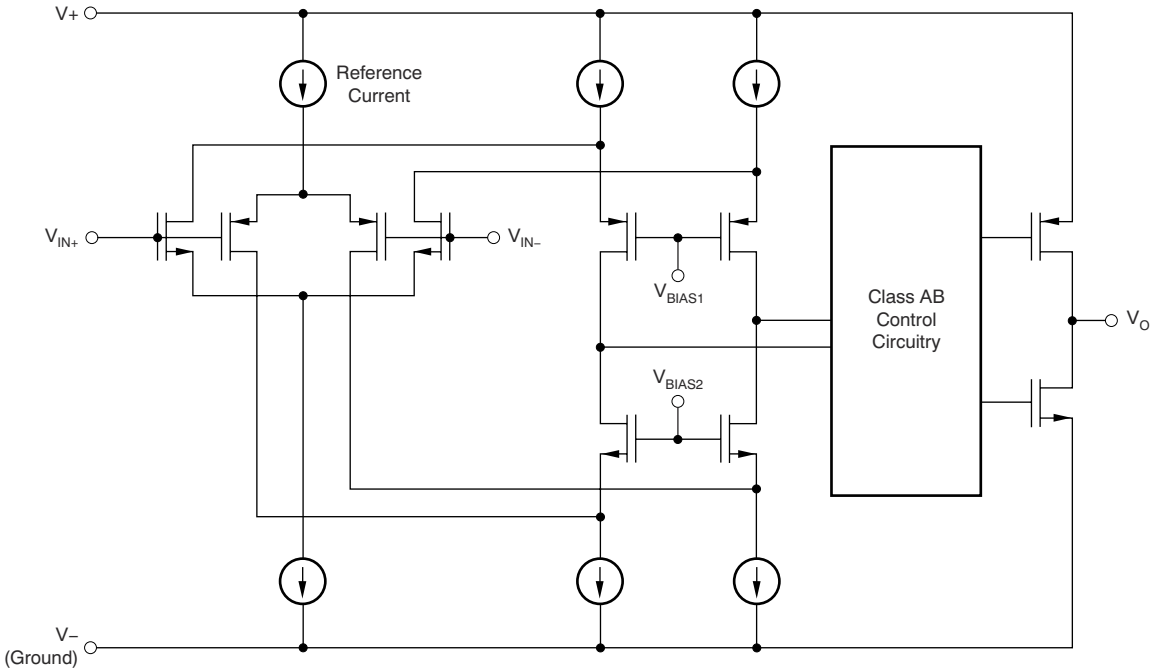

7.3 Feature Description

7.3.1 Operating Voltage

The LM290xLV family of op amps is specified for operation from 2.7 V to 5.5 V. In addition, many specifications apply from –40°C to 125°C. Parameters that vary significantly with operating voltages or temperature are shown in the section.

7.3.2 Common-Mode Input Range Includes Ground

The input common-mode voltage range of the LM290xLV family extends to the negative supply rail and within 1 V below the positive rail for the full supply voltage range of 2.7 V to 5.5 V. This performance is achieved with a P-channel differential pair, as shown in the *Functional Block Diagram*. Additionally, a complementary N-channel differential pair has been included in parallel to eliminate issues with phase reversal that are common with previous generations of op amps. However, the N-channel pair is not optimized for operation, and significant performance degradation occurs while this pair is operational. TI recommends limiting any voltage applied at the inputs to at least 1 V below the positive supply rail (V+) to ensure that the op amp conforms to the specifications detailed in the section.

7.3.3 Overload Recovery

Overload recovery is defined as the time required for the operational amplifier output to recover from a saturated state to a linear state. The output devices of the operational amplifier enter a saturation region when the output voltage exceeds the specified output voltage swing, because of the high input voltage or the high gain. After the device enters the saturation region, the charge carriers in the output devices require time to return to the linear state. After the charge carriers return to the linear state, the device begins to slew at the specified slew rate.

Copyright © 2022 Texas Instruments Incorporated

Therefore, the propagation delay (in case of an overload condition) is the sum of the overload recovery time and the slew time. The overload recovery time for the LM290xLV family is typically 1 µs.

7.3.4 Electrical Overstress

Designers often ask questions about the capability of an operational amplifier to withstand electrical overstress. These questions tend to focus on the device inputs, but can also involve the supply voltage pins. Each of these different pin functions has electrical stress limits determined by the voltage breakdown characteristics of the particular semiconductor fabrication process and specific circuits connected to the pin. Additionally, internal electrostatic discharge (ESD) protection is built into these circuits to protect them from accidental ESD events both before and during product assembly.

Having a good understanding of this basic ESD circuitry and its relevance to an electrical overstress event is helpful. Figure 7-1 shows the ESD circuits contained in the LM290xLV. The ESD protection circuitry involves several current-steering diodes connected from the input and output pins and routed back to the internal power supply lines, where they meet at an absorption device internal to the operational amplifier. This protection circuitry is intended to remain inactive during normal circuit operation.

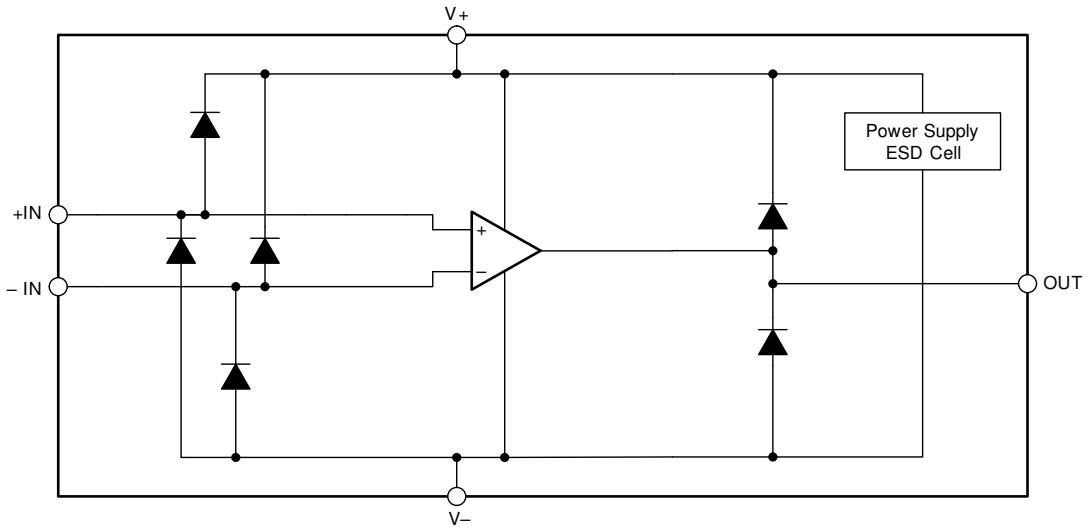

Figure 7-1. Equivalent Internal ESD Circuitry

7.3.5 EMI Susceptibility and Input Filtering

Texas Instruments has developed the ability to accurately measure and quantify the immunity of an operational amplifier over a broad frequency spectrum extending from 10 MHz to 6 GHz. The Figure 6-28 plot illustrates the performance of the LM290xLV family's EMI filters across a wide range of frequencies. For more detailed information, see *EMI Rejection Ratio of Operational Amplifiers* available for download from www.ti.com.

7.4 Device Functional Modes

The LM290xLV family has a single functional mode. The devices are powered on as long as the power-supply voltage is between 2.7 V (±1.35 V) and 5.5 V (±2.75 V).

Copyright © 2022 Texas Instruments Incorporated

8 Application and Implementation

Note

Information in the following applications sections is not part of the TI component specification, and TI does not warrant its accuracy or completeness. TI's customers are responsible for determining suitability of components for their purposes, as well as validating and testing their design implementation to confirm system functionality.

8.1 Application Information

The LM290xLV devices are a family of low-power, cost-optimized operational amplifiers. The devices operate from 2.7 V to 5.5 V, are unity-gain stable, and are suitable for a wide range of general-purpose applications. The input common-mode voltage range includes the negative rail, and allows the LM290xLV to be used in any single-supply applications.

8.2 Typical Application

Figure 8-1 shows the LM290xLV device configured in a low-side current sensing application.

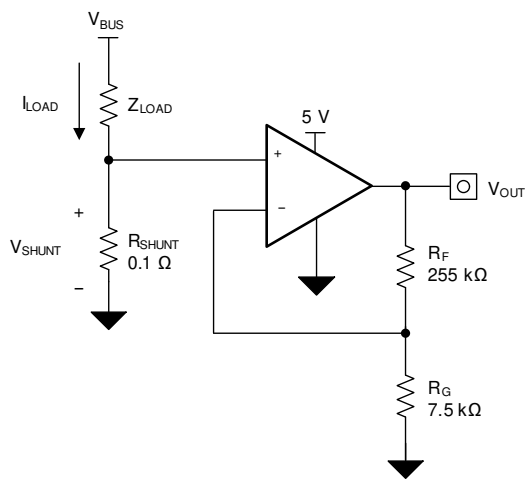

Figure 8-1. LM290xLV Device in a Low-Side, Current-Sensing Application

8.2.1 Design Requirements

The design requirements for this design are:

- Load current: 0 A to 1 A
- Output voltage: 3.5 V
- Maximum shunt voltage: 100 mV

8.2.2 Detailed Design Procedure

The transfer function of the circuit in Figure 8-1 is given in Equation 1:

$$V_{OUT} = I_{LOAD} \times R_{SHUNT} \times Gain \tag{1}$$

The load current (I_{LOAD}) produces a voltage drop across the shunt resistor (R_{SHUNT}). The load current is set from 0 A to 1 A. To keep the shunt voltage below 100 mV at maximum load current, the largest allowable shunt resistor is shown using Equation 2:

$$R_{SHUNT} = \frac{V_{SHUNT_MAX}}{I_{LOAD_MAX}} = \frac{100mV}{1A} = 100m\Omega \tag{2}$$

Using Equation 2, R_{SHUNT} is calculated to be 100 mΩ. The voltage drop produced by I_{LOAD} and R_{SHUNT} is amplified by the LM290xLV device to produce an output voltage of approximately 0 V to 3.5 V. The gain needed by the LM290xLV to produce the necessary output voltage is calculated using Equation 3:

$$\text{Gain} = \frac{\left(V_{OUT_MAX} - V_{OUT_MIN}\right)}{\left(V_{IN_MAX} - V_{IN_MIN}\right)} \tag{3}$$

Using Equation 3, the required gain is calculated to be 35 V/V, which is set with resistors R_F and R_G. Equation 4 sizes the resistors R_F and R_G, to set the gain of the LM290xLV device to 35 V/V.

$$\text{Gain} = 1 + \frac{\left(R_F\right)}{\left(R_G\right)} \tag{4}$$

8.2.3 Application Curve

Selecting R_F as 255 kΩ and R_G as 7.5 kΩ provides a combination that equals 35 V/V. Figure 8-2 shows the measured transfer function of the circuit shown in Figure 8-1. Notice that the gain is only a function of the feedback and gain resistors. This gain is adjusted by varying the ratio of the resistors and the actual resistors values are determined by the impedance levels that the designer wants to establish. The impedance level determines the current drain, the effect that stray capacitance has, and a few other behaviors. There is no optimal impedance selection that works for every system, you must choose an impedance that is ideal for your system parameters.

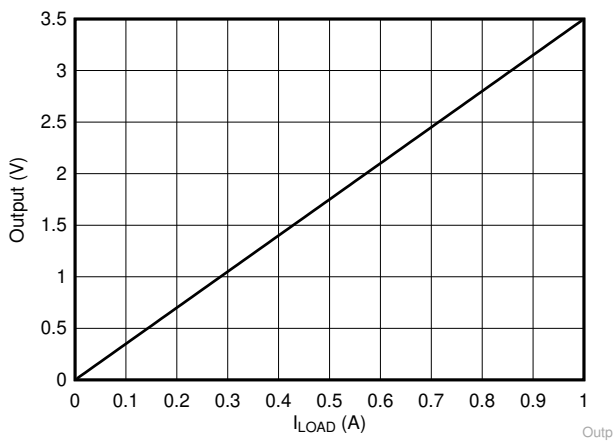

Figure 8-2. Low-Side, Current-Sense Transfer Function

Copyright © 2022 Texas Instruments Incorporated

9 Power Supply Recommendations

The LM290xLV family is specified for operation from 2.7 V to 5.5 V (±1.35 V to ±2.75 V); many specifications apply from –40°C to 125°C. Section 6.6 presents parameters that may exhibit significant variance with regard to operating voltage or temperature.

CAUTION

Supply voltages larger than 6 V may permanently damage the device; see the Section 6.1.

Place 0.1-µF bypass capacitors close to the power-supply pins to reduce coupling errors from noisy or high-impedance power supplies. For more detailed information on bypass capacitor placement, see Section 10.1.

9.1 Input and ESD Protection

The LM290xLV family incorporates internal ESD protection circuits on all pins. For input and output pins, this protection primarily consists of current-steering diodes connected between the input and power-supply pins. These ESD protection diodes provide in-circuit, input overdrive protection, as long as the current is limited to 10 mA, as stated in the section. Figure 9-1 shows how a series input resistor can be added to the driven input to limit the input current. The added resistor contributes thermal noise at the amplifier input and the value must be kept to a minimum in noise-sensitive applications.

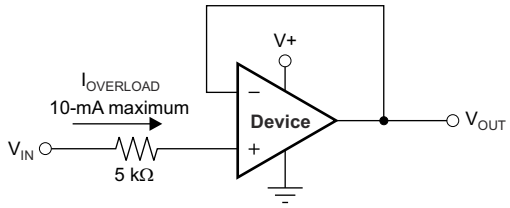

Figure 9-1. Input Current Protection

10 Layout

10.1 Layout Guidelines

For best operational performance of the device, use good printed circuit board (PCB) layout practices, including:

- Noise can propagate into analog circuitry through the power pins of the circuit as a whole and of the op amp itself. Bypass capacitors are used to reduce the coupled noise by providing low-impedance power sources local to the analog circuitry.
  - Connect low-ESR, 0.1-µF ceramic bypass capacitors between each supply pin and ground, placed as close to the device as possible. A single bypass capacitor from V+ to ground is applicable for single-supply applications.
- Separate grounding for analog and digital portions of circuitry is one of the simplest and most effective methods of noise suppression. One or more layers on multilayer PCBs are usually devoted to ground planes. A ground plane helps distribute heat and reduces electromagnetic interference (EMI) noise pickup. Take care to physically separate digital and analog grounds. Use thermal signatures or EMI measurement techniques to determine where the majority of the ground current is flowing and be sure to route this path away from sensitive analog circuitry. For more detailed information, see *Circuit Board Layout Techniques*.
- To reduce parasitic coupling, run the input traces as far away from the supply or output traces as possible. If these traces cannot be kept separate, crossing the sensitive trace at a 90° angle is much better as opposed to running the traces in parallel with the noisy trace.
- Place the external components as close to the device as possible, as shown in Figure 10-2. Keeping R_F and R_G close to the inverting input minimizes parasitic capacitance.
- Keep the length of input traces as short as possible. Remember that the input traces are the most sensitive part of the circuit.
- Consider a driven, low-impedance guard ring around the critical traces. A guard ring may significantly reduce leakage currents from nearby traces that are at different potentials.
- Cleaning the PCB following board assembly is recommended for best performance.
- Any precision integrated circuit can experience performance shifts resulting from moisture ingress into the plastic package. Following any aqueous PCB cleaning process, baking the PCB assembly is recommended to remove moisture introduced into the device packaging during the cleaning process. A low-temperature, post-cleaning bake at 85°C for 30 minutes is sufficient for most circumstances.

10.2 Layout Example

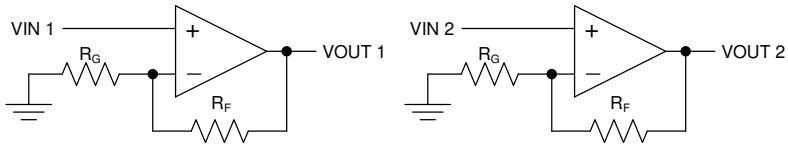

Figure 10-1. Schematic Representation for

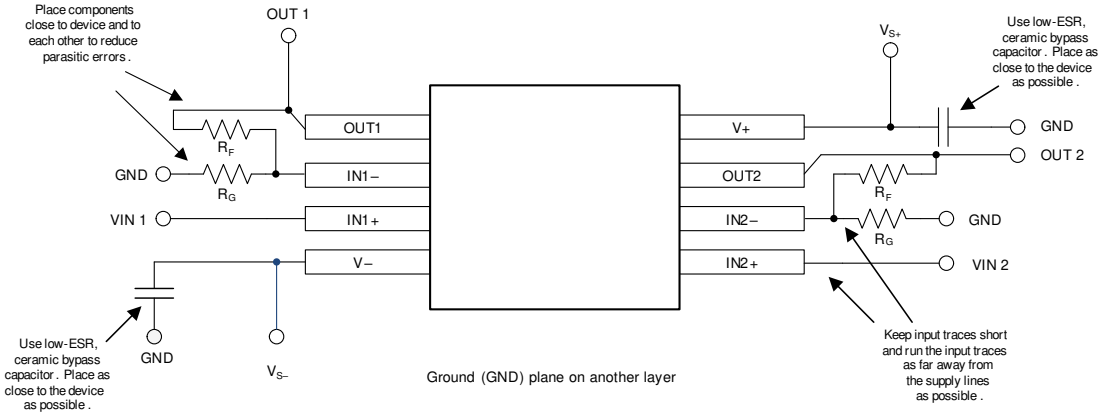

Figure 10-2. Layout Example

Copyright © 2022 Texas Instruments Incorporated

11 Device and Documentation Support

11.1 Documentation Support

11.1.1 Related Documentation

For related documentation, see the following:

- Texas Instruments, *EMI Rejection Ratio of Operational Amplifiers*

11.2 Receiving Notification of Documentation Updates

To receive notification of documentation updates, navigate to the device product folder on ti.com. Click on *Subscribe to updates* to register and receive a weekly digest of any product information that has changed. For change details, review the revision history included in any revised document.

11.3 Support Resources

TI E2E™ support forums are an engineer's go-to source for fast, verified answers and design help — straight from the experts. Search existing answers or ask your own question to get the quick design help you need.

Linked content is provided "AS IS" by the respective contributors. They do not constitute TI specifications and do not necessarily reflect TI's views; see TI's Terms of Use.

11.4 Trademarks

TI E2E™ is a trademark of Texas Instruments.
All trademarks are the property of their respective owners.

11.5 Electrostatic Discharge Caution

This integrated circuit can be damaged by ESD. Texas Instruments recommends that all integrated circuits be handled with appropriate precautions. Failure to observe proper handling and installation procedures can cause damage.

ESD damage can range from subtle performance degradation to complete device failure. Precision integrated circuits may be more susceptible to damage because very small parametric changes could cause the device not to meet its published specifications.

11.6 Glossary

TI Glossary This glossary lists and explains terms, acronyms, and definitions.

12 Mechanical, Packaging, and Orderable Information

The following pages include mechanical, packaging, and orderable information. This information is the most-current data available for the designated devices. This data is subject to change without notice and without revision of this document. For browser-based versions of this data sheet, see the left-hand navigation pane.

PACKAGING INFORMATION

Orderable part number	Status (1)	Material type (2)	Package | Pins	Package qty | Carrier	RoHS (3)	Lead finish/ Ball material (4)	MSL rating/ Peak reflow (5)	Op temp (°C)	Part marking (6)
LM2902LVIDR	Active	Production	SOIC (D) | 14	2500 | LARGE T&R	Yes	NIPDAU	Level-2-260C-1 YEAR	-40 to 125	LM2902LV
LM2902LVIDR.A	Active	Production	SOIC (D) | 14	2500 | LARGE T&R	Yes	NIPDAU	Level-2-260C-1 YEAR	-40 to 125	LM2902LV
LM2902LVIDYYR	Active	Production	SOT-23-THIN (DYY) | 14	3000 | LARGE T&R	Yes	NIPDAU	Level-1-260C-UNLIM	-40 to 125	LM2902I
LM2902LVIDYYR.A	Active	Production	SOT-23-THIN (DYY) | 14	3000 | LARGE T&R	Yes	NIPDAU	Level-1-260C-UNLIM	-40 to 125	LM2902I
LM2902LVIPWR	Active	Production	TSSOP (PW) | 14	2000 | LARGE T&R	Yes	NIPDAU | SN	Level-2-260C-1 YEAR	-40 to 125	(LM2902LV, M2902LV)
LM2902LVIPWR.A	Active	Production	TSSOP (PW) | 14	2000 | LARGE T&R	Yes	SN	Level-2-260C-1 YEAR	-40 to 125	(LM2902LV, M2902LV)
LM2904LVIDDFR	Active	Production	SOT-23-THIN (DDF) | 8	3000 | LARGE T&R	Yes	NIPDAU	Level-1-260C-UNLIM	-40 to 125	L904
LM2904LVIDDFR.A	Active	Production	SOT-23-THIN (DDF) | 8	3000 | LARGE T&R	Yes	NIPDAU	Level-1-260C-UNLIM	-40 to 125	L904
LM2904LVIDGKR	Active	Production	VSSOP (DGK) | 8	2500 | LARGE T&R	Yes	NIPDAU | SN | NIPDAUAG	Level-2-260C-1 YEAR	-40 to 125	1SQX
LM2904LVIDGKR.A	Active	Production	VSSOP (DGK) | 8	2500 | LARGE T&R	Yes	NIPDAU	Level-2-260C-1 YEAR	-40 to 125	1SQX
LM2904LVIDR	Active	Production	SOIC (D) | 8	2500 | LARGE T&R	Yes	NIPDAU | SN	Level-2-260C-1 YEAR	-40 to 125	2904LV
LM2904LVIDR.A	Active	Production	SOIC (D) | 8	2500 | LARGE T&R	Yes	SN	Level-2-260C-1 YEAR	-40 to 125	2904LV
LM2904LVIPWR	Active	Production	TSSOP (PW) | 8	2000 | LARGE T&R	Yes	NIPDAU | SN	Level-2-260C-1 YEAR	-40 to 125	2904
LM2904LVIPWR.A	Active	Production	TSSOP (PW) | 8	2000 | LARGE T&R	Yes	SN	Level-2-260C-1 YEAR	-40 to 125	2904

(1) **Status:** For more details on status, see our product life cycle.

(2) **Material type:** When designated, preproduction parts are prototypes/experimental devices, and are not yet approved or released for full production. Testing and final process, including without limitation quality assurance, reliability performance testing, and/or process qualification, may not yet be complete, and this item is subject to further changes or possible discontinuation. If available for ordering, purchases will be subject to an additional waiver at checkout, and are intended for early internal evaluation purposes only. These items are sold without warranties of any kind.

(3) **RoHS values:** Yes, No, RoHS Exempt. See the TI RoHS Statement for additional information and value definition.

(4) **Lead finish/Ball material:** Parts may have multiple material finish options. Finish options are separated by a vertical ruled line. Lead finish/Ball material values may wrap to two lines if the finish value exceeds the maximum column width.

(5) **MSL rating/Peak reflow:** The moisture sensitivity level ratings and peak solder (reflow) temperatures. In the event that a part has multiple moisture sensitivity ratings, only the lowest level per JEDEC standards is shown. Refer to the shipping label for the actual reflow temperature that will be used to mount the part to the printed circuit board.

(6) **Part marking:** There may be an additional marking, which relates to the logo, the lot trace code information, or the environmental category of the part.

Multiple part markings will be inside parentheses. Only one part marking contained in parentheses and separated by a "~" will appear on a part. If a line is indented then it is a continuation of the previous line and the two combined represent the entire part marking for that device.

Important Information and Disclaimer: The information provided on this page represents TI's knowledge and belief as of the date that it is provided. TI bases its knowledge and belief on information provided by third parties, and makes no representation or warranty as to the accuracy of such information. Efforts are underway to better integrate information from third parties. TI has taken and continues to take reasonable steps to provide representative and accurate information but may not have conducted destructive testing or chemical analysis on incoming materials and chemicals. TI and TI suppliers consider certain information to be proprietary, and thus CAS numbers and other limited information may not be available for release.

In no event shall TI's liability arising out of such information exceed the total purchase price of the TI part(s) at issue in this document sold by TI to Customer on an annual basis.

OTHER QUALIFIED VERSIONS OF LM2902LV, LM2904LV :

- Automotive : LM2902LV-Q1, LM2904LV-Q1

NOTE: Qualified Version Definitions:

- Automotive - Q100 devices qualified for high-reliability automotive applications targeting zero defects

TAPE AND REEL INFORMATION

REEL DIMENSIONS

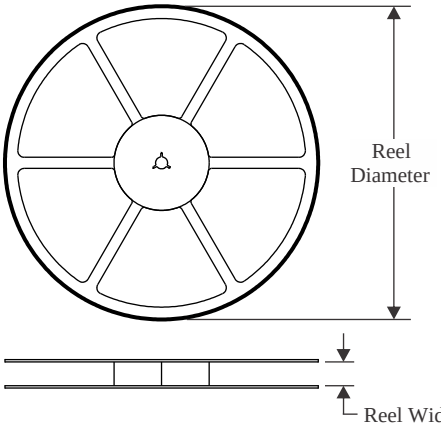

TAPE DIMENSIONS

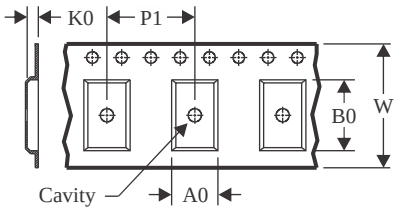

A0	Dimension designed to accommodate the component width
B0	Dimension designed to accommodate the component length
K0	Dimension designed to accommodate the component thickness
W	Overall width of the carrier tape
P1	Pitch between successive cavity centers

QUADRANT ASSIGNMENTS FOR PIN 1 ORIENTATION IN TAPE

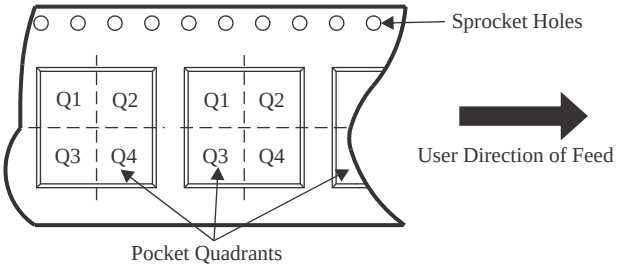

*All dimensions are nominal

Device	Package Type	Package Drawing	Pins	SPQ	Reel Diameter (mm)	Reel Width W1 (mm)	A0 (mm)	B0 (mm)	K0 (mm)	P1 (mm)	W (mm)	Pin1 Quadrant
LM2902LVIDR	SOIC	D	14	2500	330.0	16.4	6.5	9.0	2.1	8.0	16.0	Q1
LM2902LVIDYYR	SOT-23-THIN	DYY	14	3000	330.0	12.4	4.8	3.6	1.6	8.0	12.0	Q3
LM2902LVIPWR	TSSOP	PW	14	2000	330.0	12.4	6.9	5.6	1.6	8.0	12.0	Q1
LM2904LVIDDFR	SOT-23-THIN	DDF	8	3000	180.0	8.4	3.2	3.2	1.4	4.0	8.0	Q3
LM2904LVIDGKR	VSSOP	DGK	8	2500	330.0	12.4	5.3	3.4	1.4	8.0	12.0	Q1
LM2904LVIDR	SOIC	D	8	2500	330.0	12.4	6.4	5.2	2.1	8.0	12.0	Q1
LM2904LVIPWR	TSSOP	PW	8	2000	330.0	12.4	7.0	3.6	1.6	8.0	12.0	Q1

TAPE AND REEL BOX DIMENSIONS

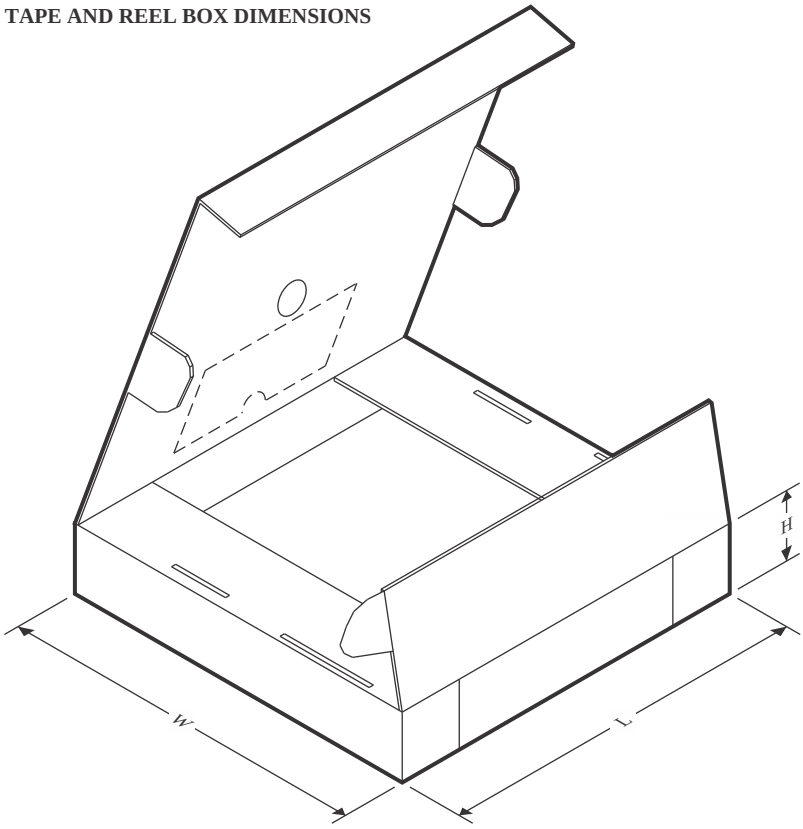

*All dimensions are nominal

Device	Package Type	Package Drawing	Pins	SPQ	Length (mm)	Width (mm)	Height (mm)
LM2902LVIDR	SOIC	D	14	2500	353.0	353.0	32.0
LM2902LVIDYYR	SOT-23-THIN	DYY	14	3000	336.6	336.6	31.8
LM2902LVIPWR	TSSOP	PW	14	2000	353.0	353.0	32.0
LM2904LVIDDFR	SOT-23-THIN	DDF	8	3000	210.0	185.0	35.0
LM2904LVIDGKR	VSSOP	DGK	8	2500	356.0	356.0	36.0
LM2904LVIDR	SOIC	D	8	2500	353.0	353.0	32.0
LM2904LVIPWR	TSSOP	PW	8	2000	353.0	353.0	32.0

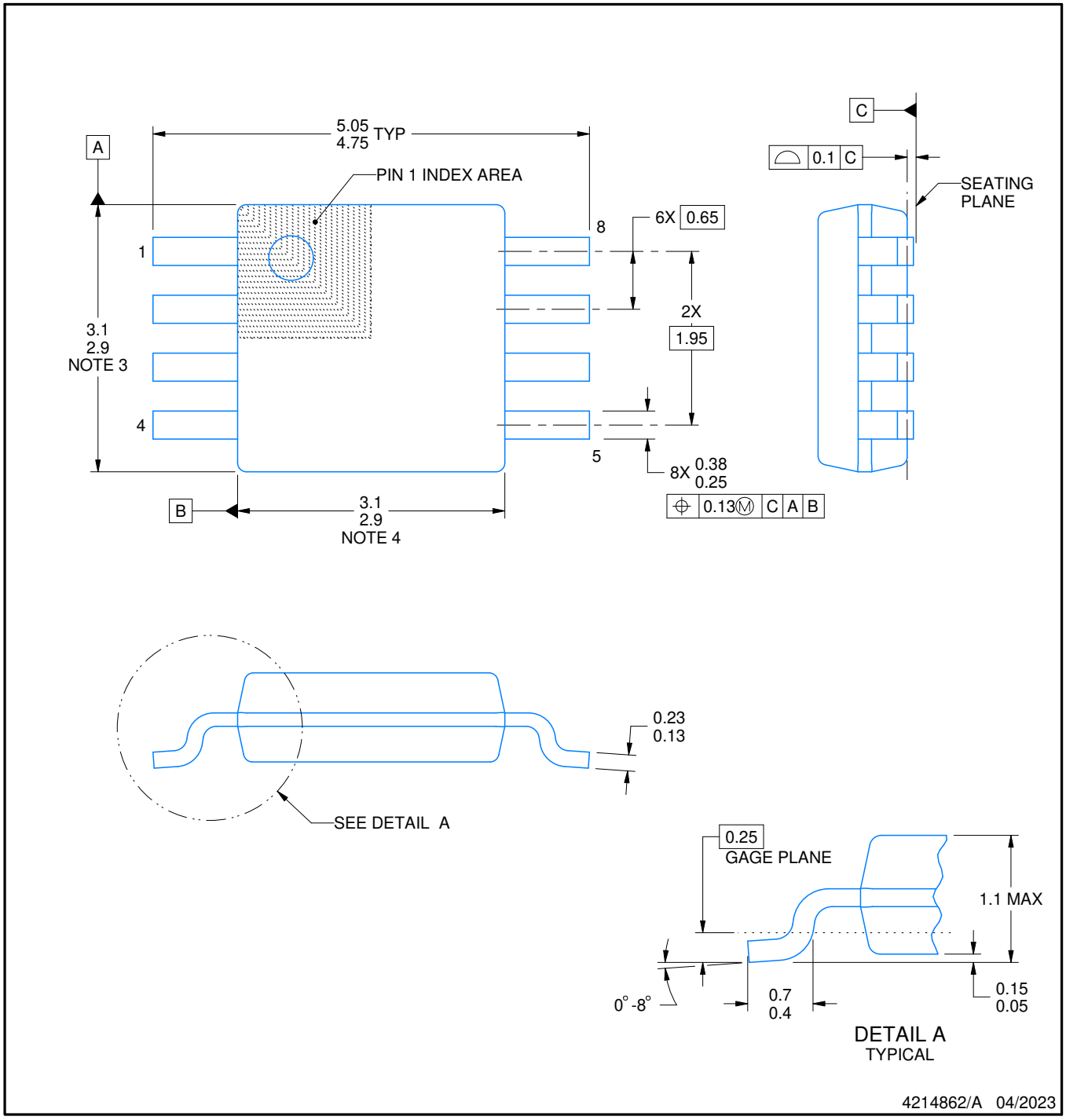

PowerPAD is a trademark of Texas Instruments.

NOTES:

1. All linear dimensions are in millimeters. Any dimensions in parenthesis are for reference only. Dimensioning and tolerancing per ASME Y14.5M.
2. This drawing is subject to change without notice.
3. This dimension does not include mold flash, protrusions, or gate burrs. Mold flash, protrusions, or gate burrs shall not exceed 0.15 mm per side.
4. This dimension does not include interlead flash. Interlead flash shall not exceed 0.25 mm per side.
5. Reference JEDEC registration MO-187.

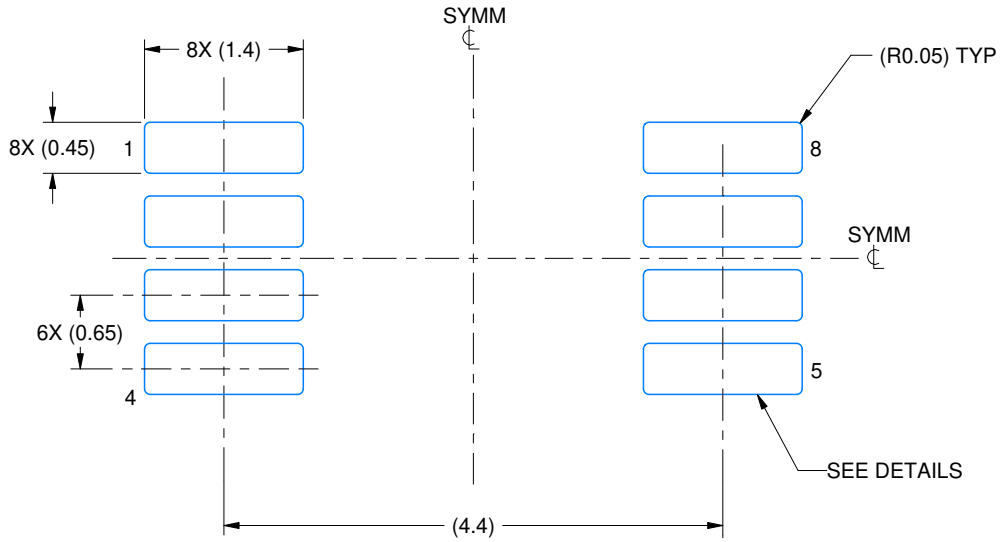

LAND PATTERN EXAMPLE
EXPOSED METAL SHOWN
SCALE: 15X

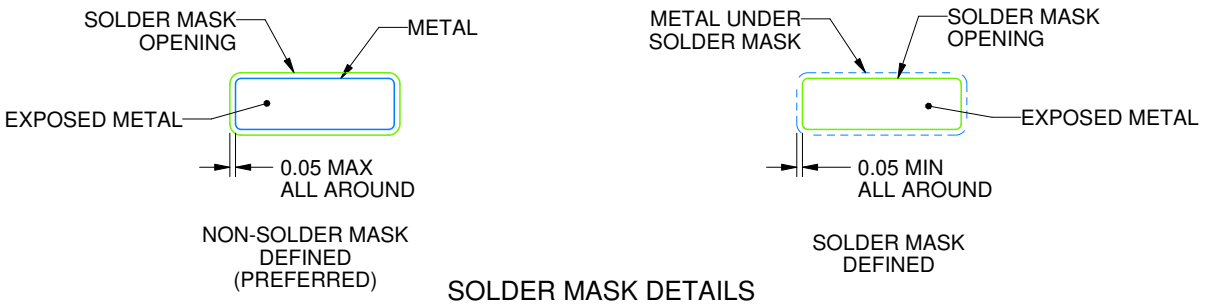

SOLDER MASK DETAILS

4214862/A 04/2023

NOTES: (continued)

6. Publication IPC-7351 may have alternate designs.
7. Solder mask tolerances between and around signal pads can vary based on board fabrication site.
8. Vias are optional depending on application, refer to device data sheet. If any vias are implemented, refer to their locations shown on this view. It is recommended that vias under paste be filled, plugged or tented.
9. Size of metal pad may vary due to creepage requirement.

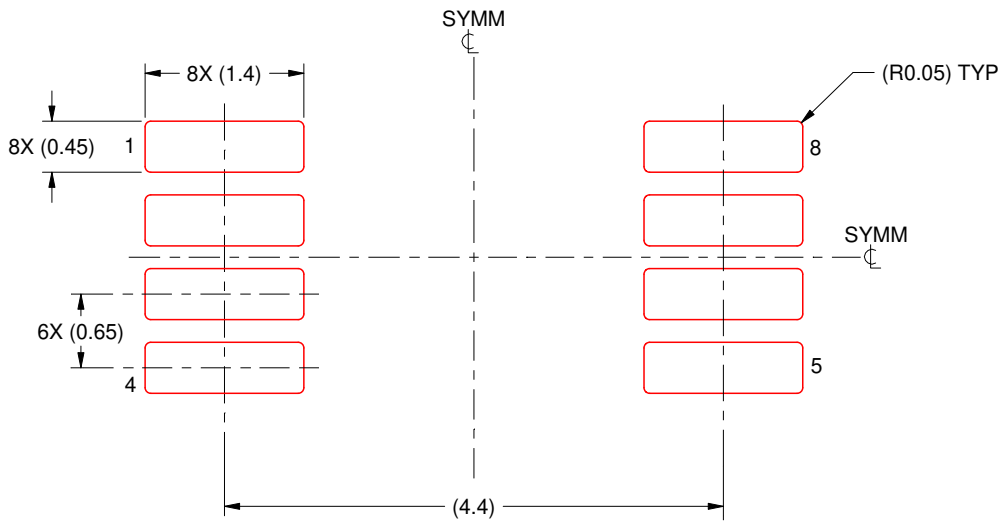

SOLDER PASTE EXAMPLE
SCALE: 15X

4214862/A 04/2023

NOTES: (continued)

11. Laser cutting apertures with trapezoidal walls and rounded corners may offer better paste release. IPC-7525 may have alternate design recommendations.
12. Board assembly site may have different recommendations for stencil design.

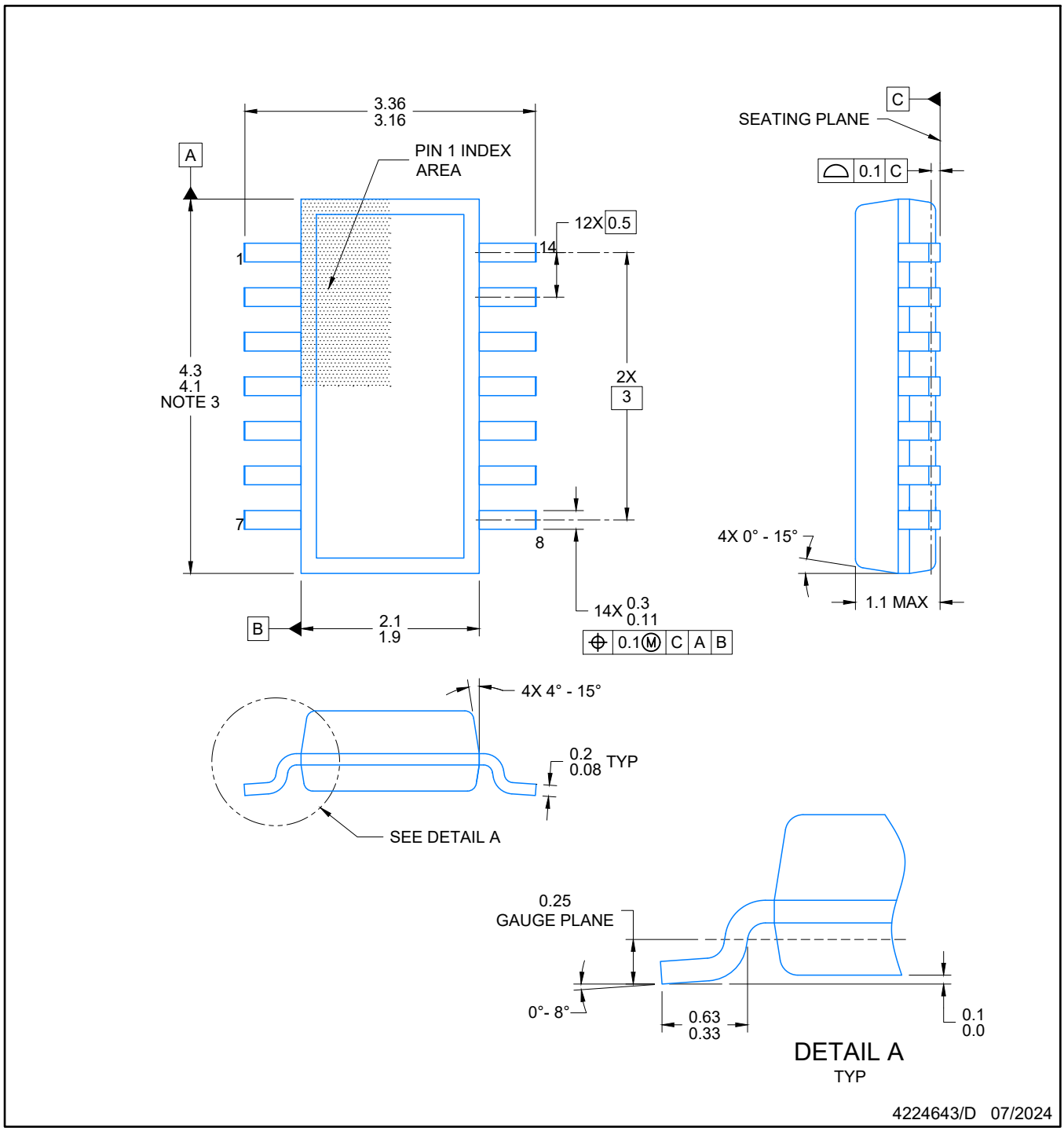

NOTES:

1. All linear dimensions are in millimeters. Any dimensions in parenthesis are for reference only. Dimensioning and tolerancing per ASME Y14.5M.
2. This drawing is subject to change without notice.
3. This dimension does not include mold flash, protrusions, or gate burrs. Mold flash, protrusions, or gate burrs shall not exceed 0.15 per side.
4. This dimension does not include interlead flash. Interlead flash shall not exceed 0.50 per side.
5. Reference JEDEC Registration MO-345, Variation AB

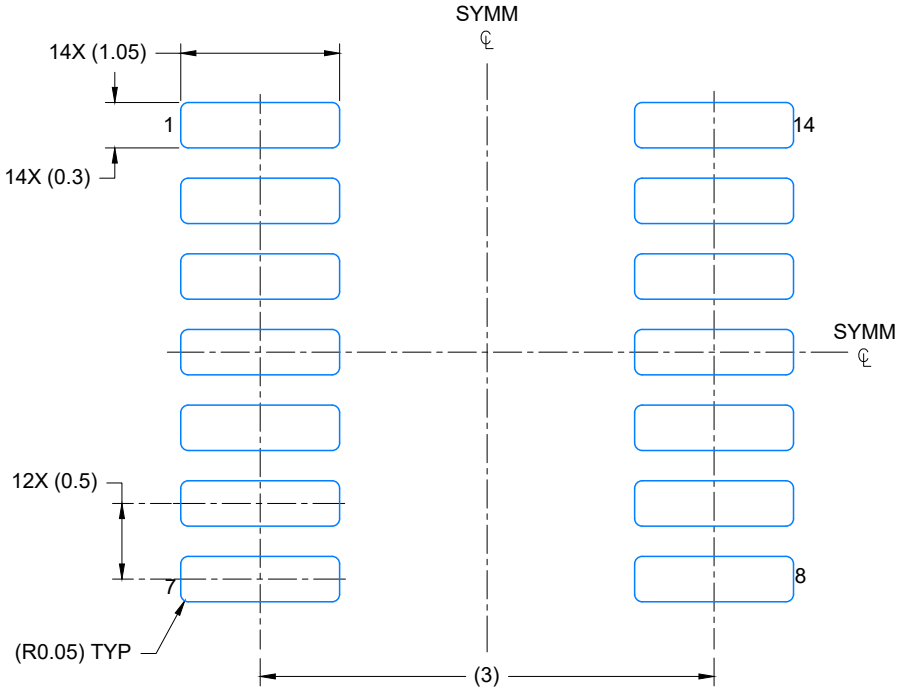

LAND PATTERN EXAMPLE
EXPOSED METAL SHOWN
SCALE: 20X

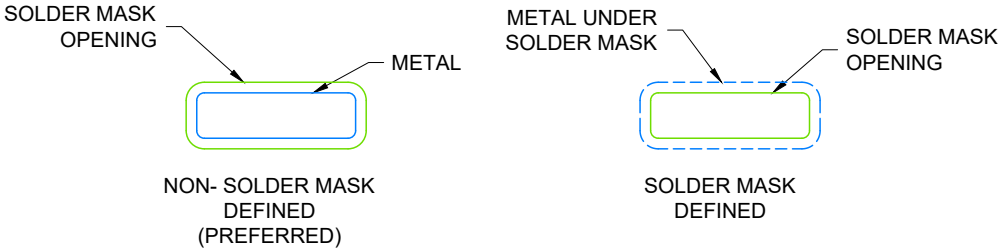

SOLDER MASK DETAILS

4224643/D 07/2024

NOTES: (continued)

6. Publication IPC-7351 may have alternate designs.
7. Solder mask tolerances between and around signal pads can vary based on board fabrication site.

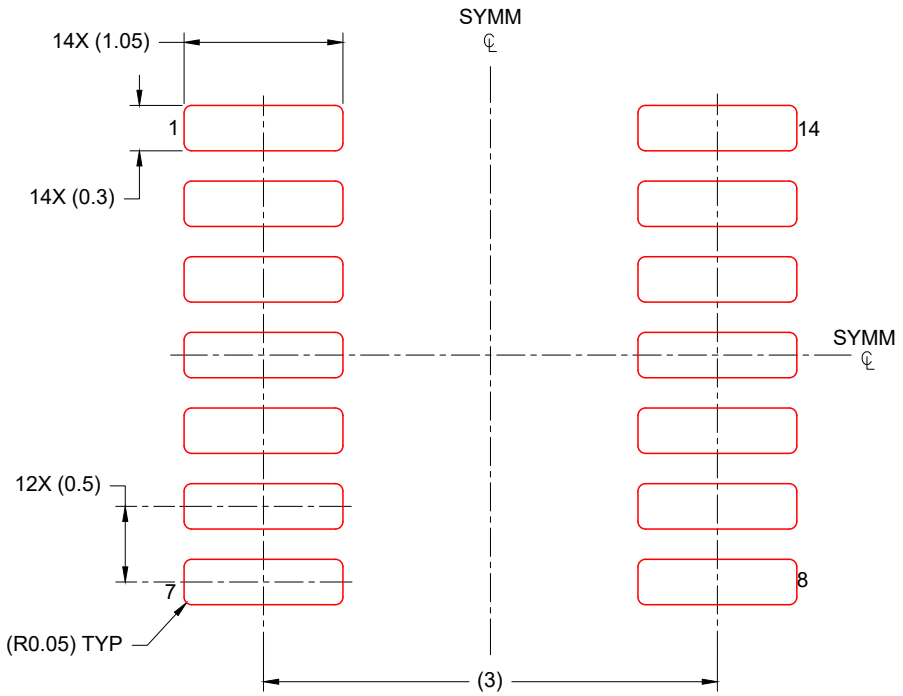

SOLDER PASTE EXAMPLE
BASED ON 0.125 mm THICK STENCIL
SCALE: 20X

4224643/D 07/2024

NOTES: (continued)

8. Laser cutting apertures with trapezoidal walls and rounded corners may offer better paste release. IPC-7525 may have alternate design recommendations.
9. Board assembly site may have different recommendations for stencil design.

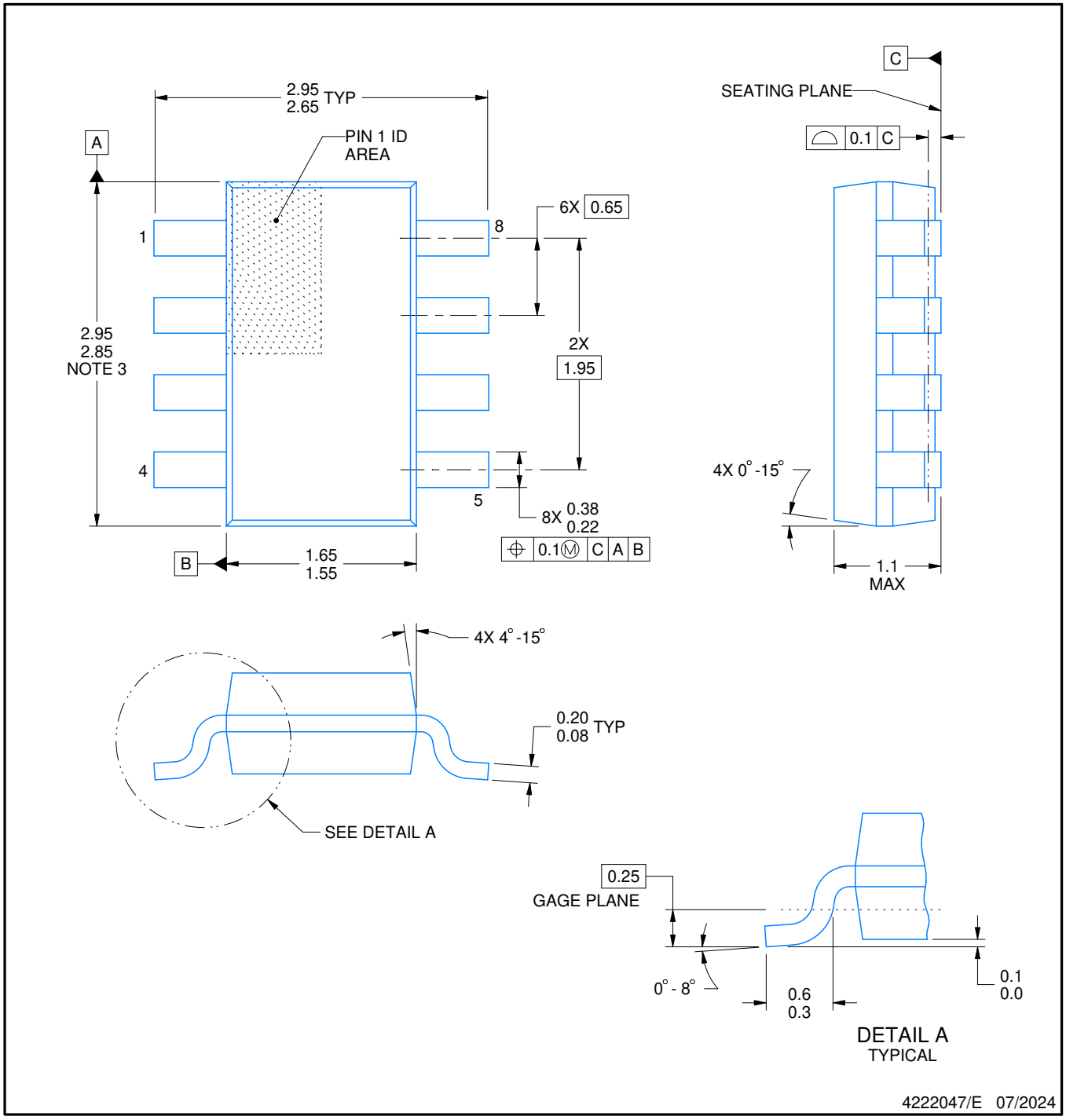

NOTES:

1. All linear dimensions are in millimeters. Any dimensions in parenthesis are for reference only. Dimensioning and tolerancing per ASME Y14.5M.
2. This drawing is subject to change without notice.
3. This dimension does not include mold flash, protrusions, or gate burrs. Mold flash, protrusions, or gate burrs shall not exceed 0.15 mm per side.

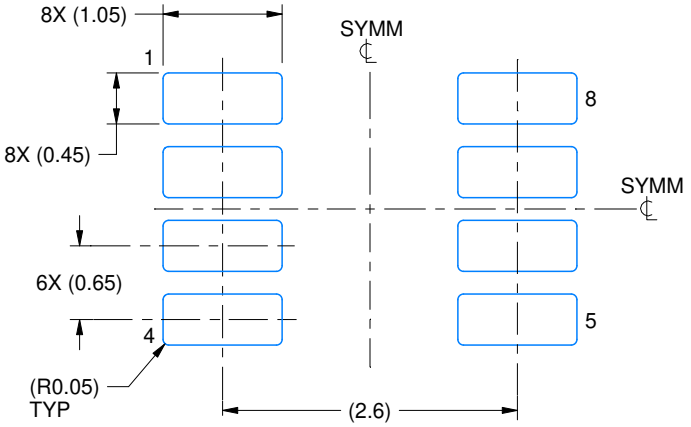

LAND PATTERN EXAMPLE
EXPOSED METAL SHOWN
SCALE:15X

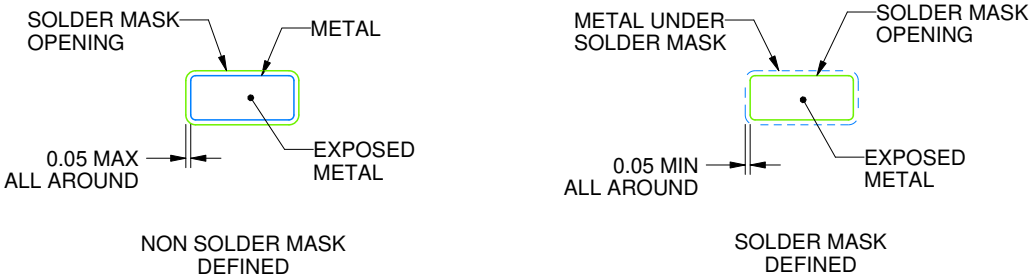

SOLDER MASK DETAILS

4222047/E 07/2024

NOTES: (continued)

4. Publication IPC-7351 may have alternate designs.
5. Solder mask tolerances between and around signal pads can vary based on board fabrication site.

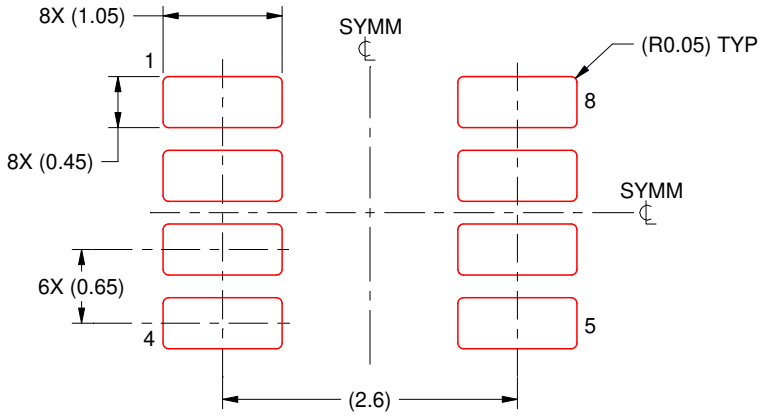

SOLDER PASTE EXAMPLE
BASED ON 0.125 mm THICK STENCIL
SCALE:15X

4222047/E 07/2024

NOTES: (continued)

6. Laser cutting apertures with trapezoidal walls and rounded corners may offer better paste release. IPC-7525 may have alternate design recommendations.
7. Board assembly site may have different recommendations for stencil design.

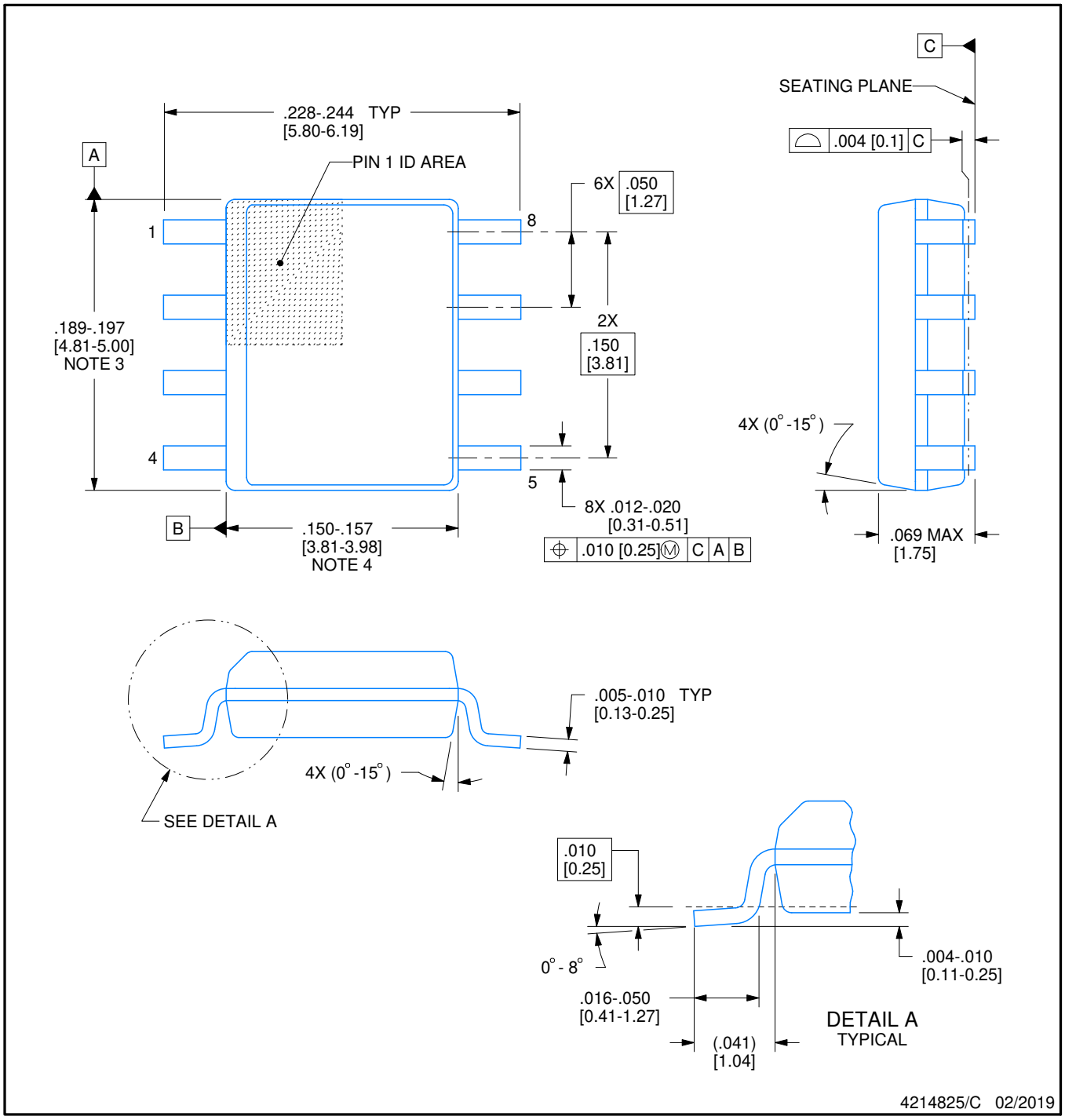

NOTES:

1. Linear dimensions are in inches [millimeters]. Dimensions in parenthesis are for reference only. Controlling dimensions are in inches. Dimensioning and tolerancing per ASME Y14.5M.
2. This drawing is subject to change without notice.
3. This dimension does not include mold flash, protrusions, or gate burrs. Mold flash, protrusions, or gate burrs shall not exceed .006 [0.15] per side.
4. This dimension does not include interlead flash.
5. Reference JEDEC registration MS-012, variation AA.

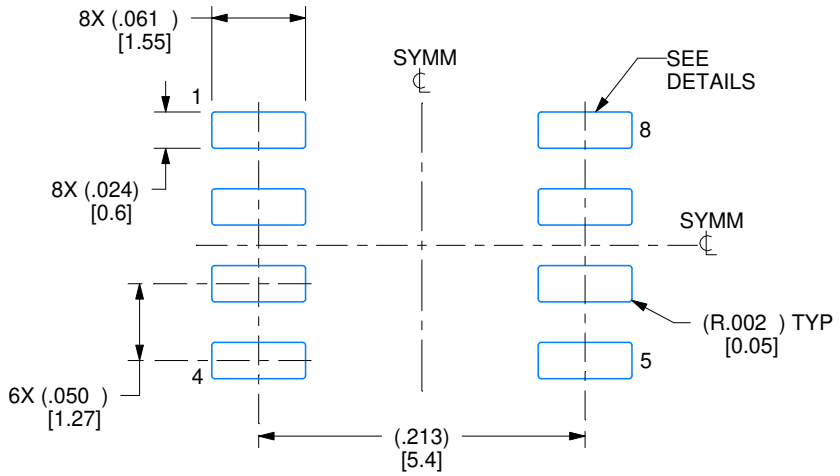

LAND PATTERN EXAMPLE
EXPOSED METAL SHOWN
SCALE:8X

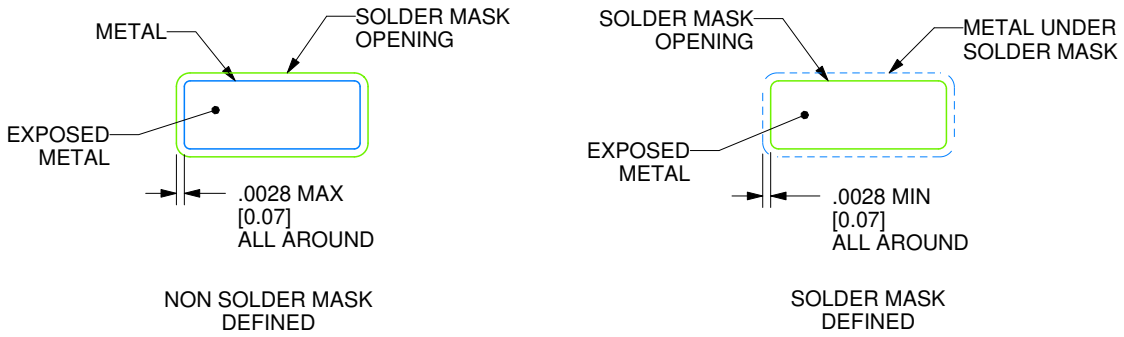

SOLDER MASK DETAILS

4214825/C 02/2019

NOTES: (continued)

6. Publication IPC-7351 may have alternate designs.
7. Solder mask tolerances between and around signal pads can vary based on board fabrication site.

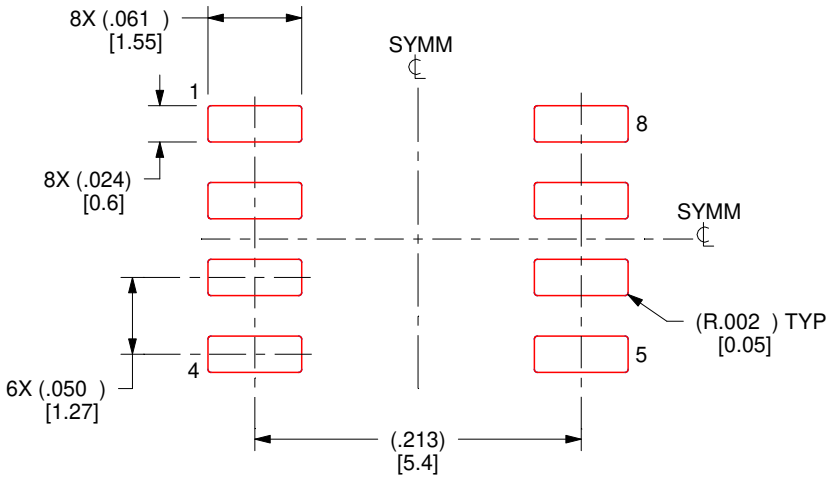

SOLDER PASTE EXAMPLE
BASED ON .005 INCH [0.125 MM] THICK STENCIL
SCALE:8X

4214825/C 02/2019

NOTES: (continued)

8. Laser cutting apertures with trapezoidal walls and rounded corners may offer better paste release. IPC-7525 may have alternate design recommendations.
9. Board assembly site may have different recommendations for stencil design.

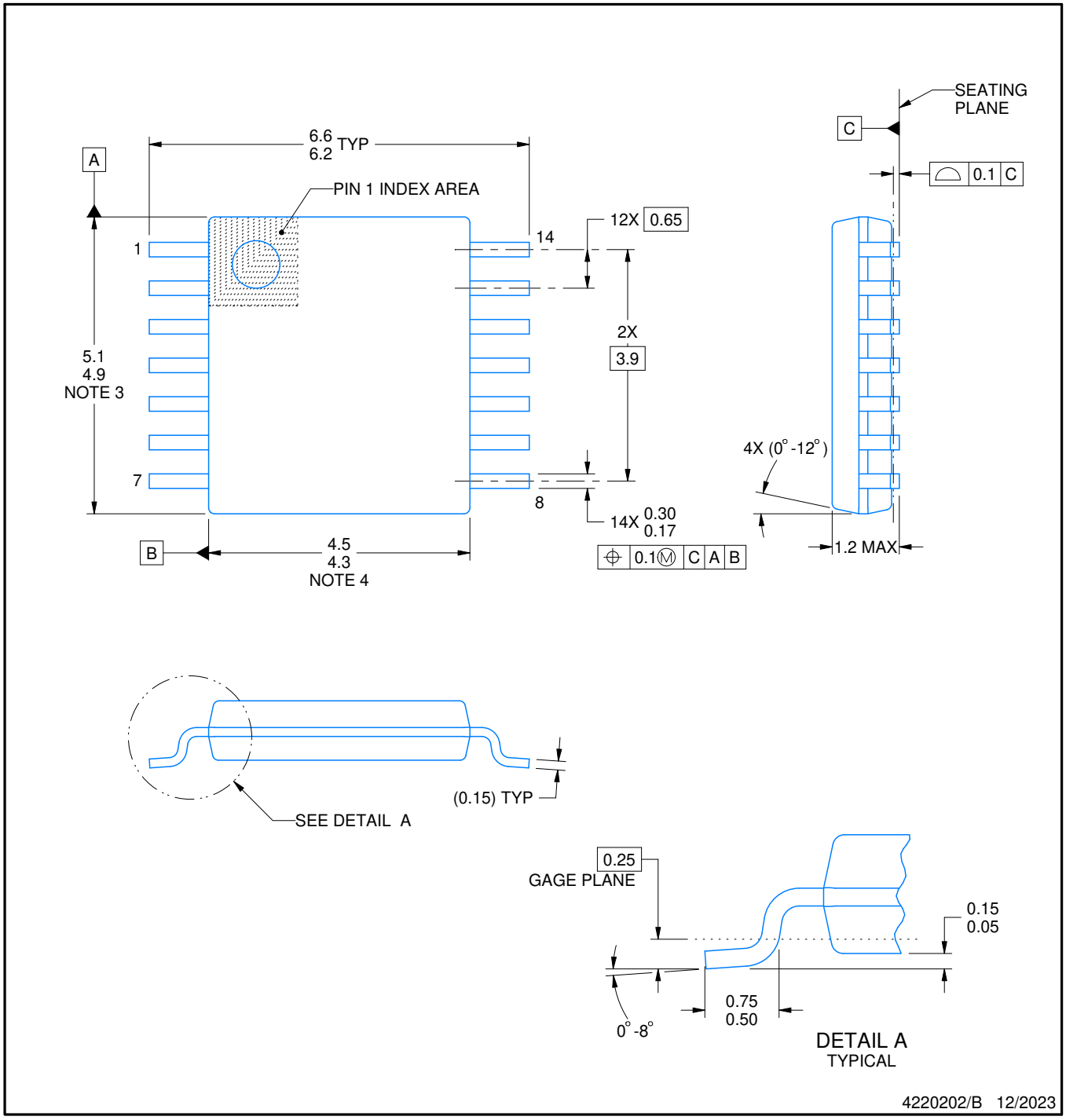

NOTES:

1. All linear dimensions are in millimeters. Any dimensions in parenthesis are for reference only. Dimensioning and tolerancing per ASME Y14.5M.
2. This drawing is subject to change without notice.
3. This dimension does not include mold flash, protrusions, or gate burrs. Mold flash, protrusions, or gate burrs shall not exceed 0.15 mm per side.
4. This dimension does not include interlead flash. Interlead flash shall not exceed 0.25 mm per side.
5. Reference JEDEC registration MO-153.

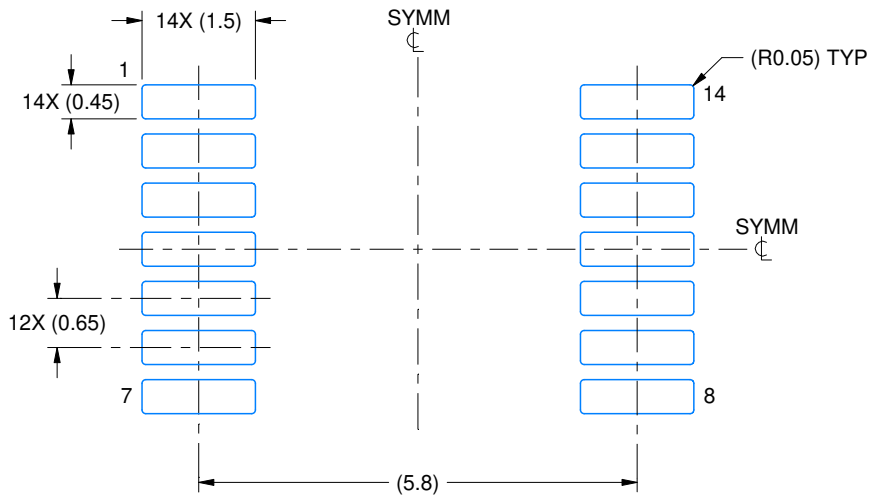

LAND PATTERN EXAMPLE
EXPOSED METAL SHOWN
SCALE: 10X

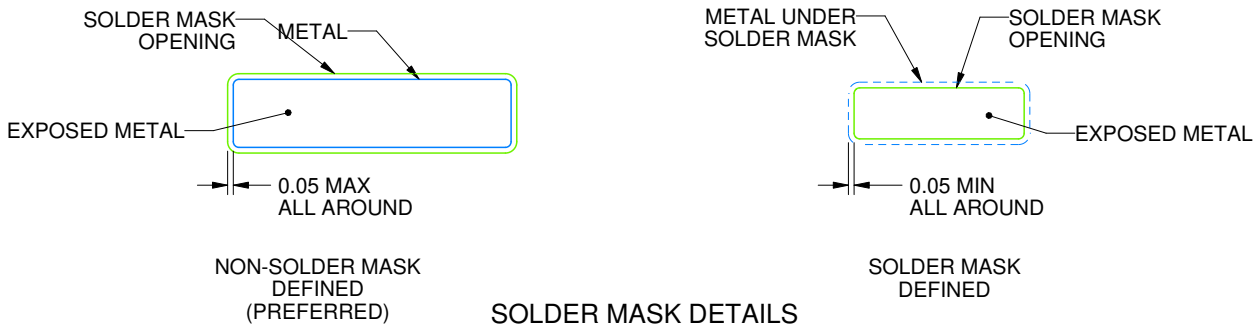

SOLDER MASK DETAILS

4220202/B 12/2023

NOTES: (continued)

6. Publication IPC-7351 may have alternate designs.
7. Solder mask tolerances between and around signal pads can vary based on board fabrication site.

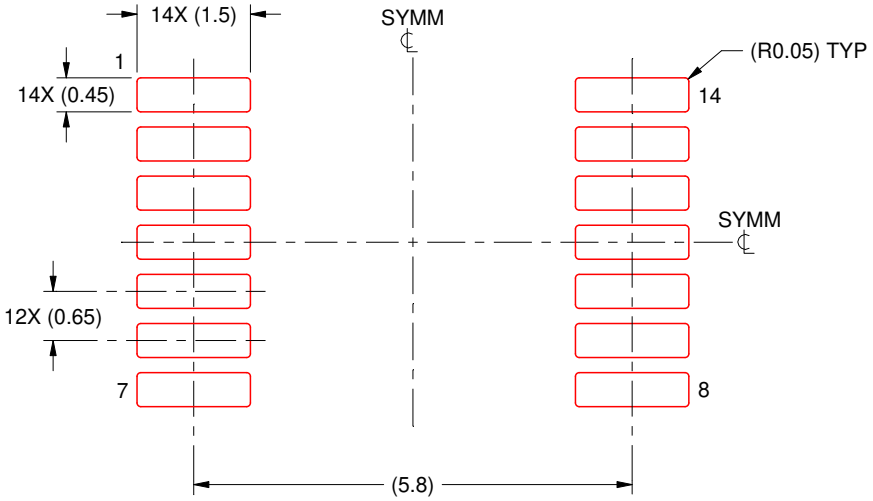

SOLDER PASTE EXAMPLE
BASED ON 0.125 mm THICK STENCIL
SCALE: 10X

4220202/B 12/2023

NOTES: (continued)

8. Laser cutting apertures with trapezoidal walls and rounded corners may offer better paste release. IPC-7525 may have alternate design recommendations.
9. Board assembly site may have different recommendations for stencil design.

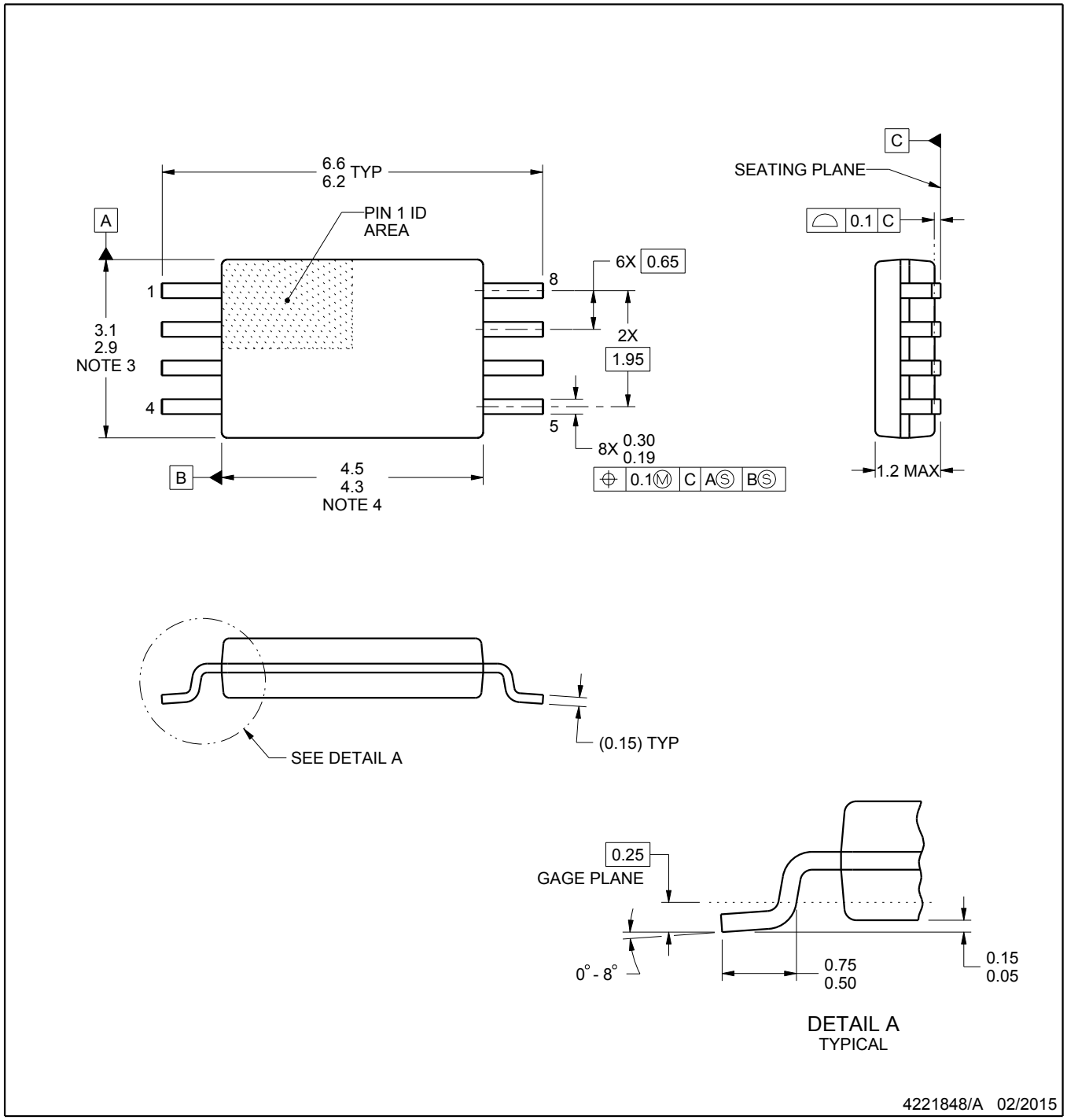

NOTES:

1. All linear dimensions are in millimeters. Any dimensions in parenthesis are for reference only. Dimensioning and tolerancing per ASME Y14.5M.
2. This drawing is subject to change without notice.
3. This dimension does not include mold flash, protrusions, or gate burrs. Mold flash, protrusions, or gate burrs shall not exceed 0.15 mm per side.
4. This dimension does not include interlead flash. Interlead flash shall not exceed 0.25 mm per side.
5. Reference JEDEC registration MO-153, variation AA.

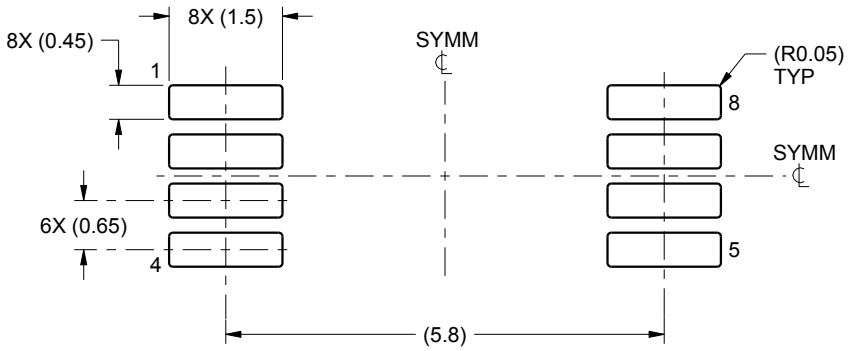

LAND PATTERN EXAMPLE
SCALE:10X

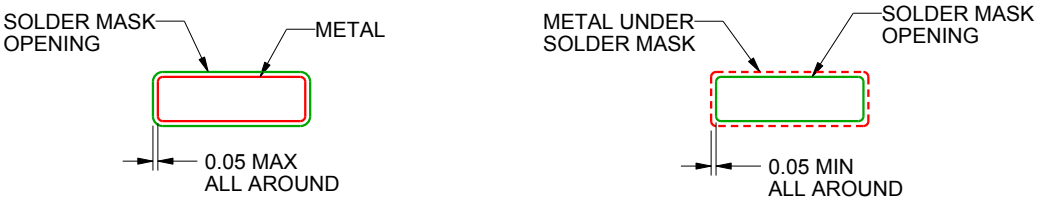

NON SOLDER MASK
DEFINED

SOLDER MASK
DEFINED

SOLDER MASK DETAILS
NOT TO SCALE

4221848/A 02/2015

NOTES: (continued)

6. Publication IPC-7351 may have alternate designs.
7. Solder mask tolerances between and around signal pads can vary based on board fabrication site.

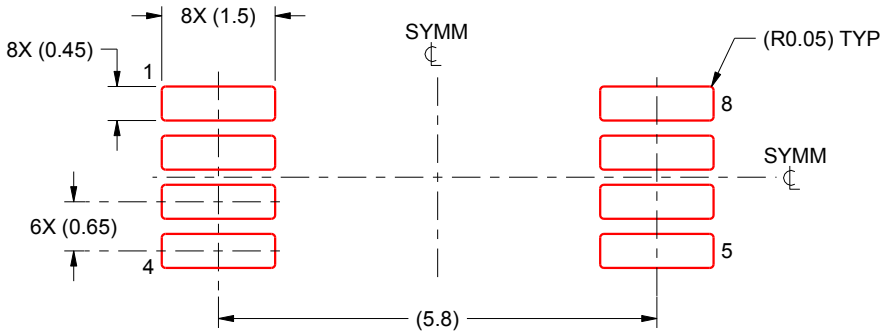

SOLDER PASTE EXAMPLE
BASED ON 0.125 mm THICK STENCIL
SCALE:10X

4221848/A 02/2015

NOTES: (continued)

8. Laser cutting apertures with trapezoidal walls and rounded corners may offer better paste release. IPC-7525 may have alternate design recommendations.
9. Board assembly site may have different recommendations for stencil design.

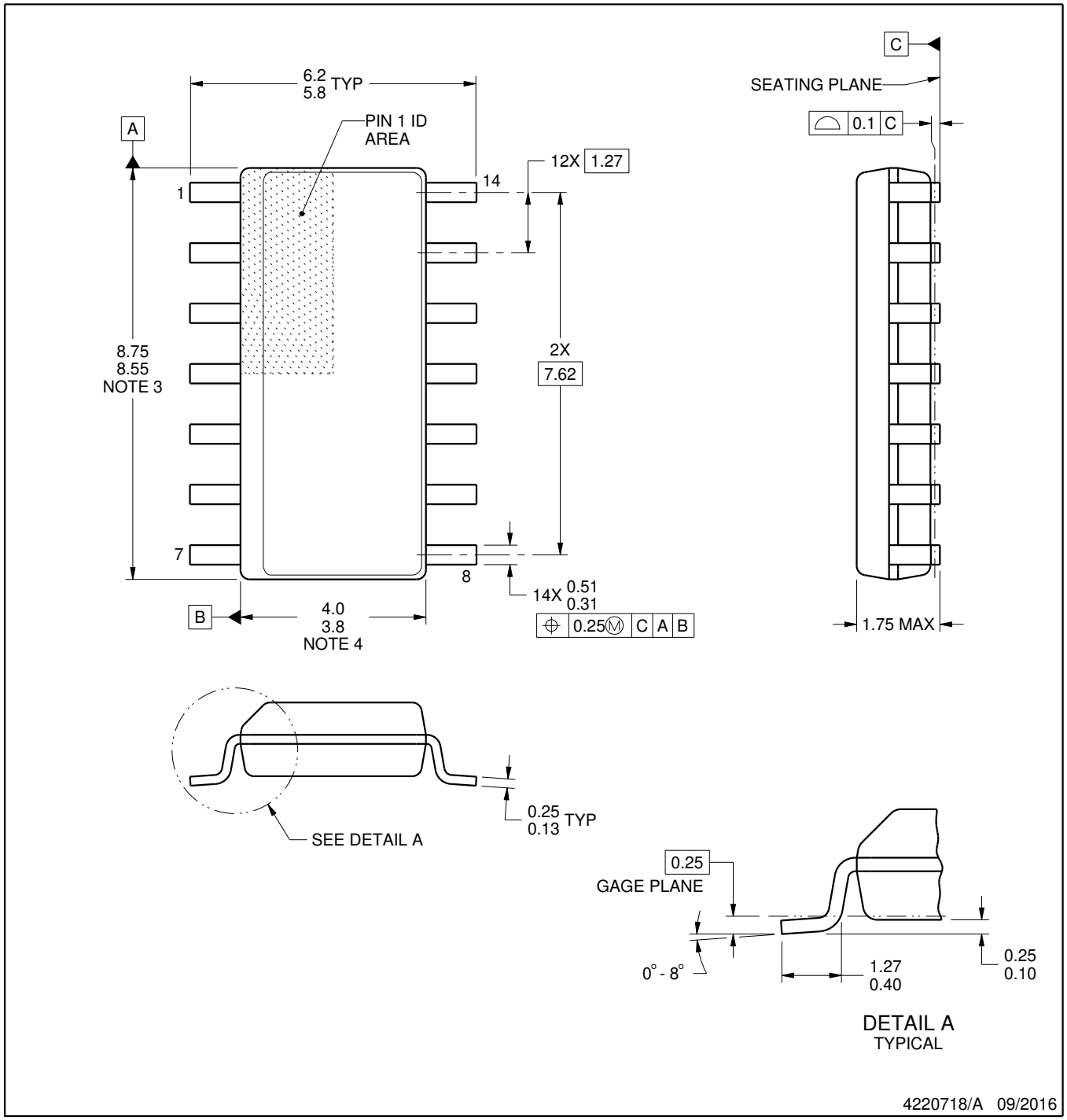

NOTES:

1. All linear dimensions are in millimeters. Dimensions in parenthesis are for reference only. Dimensioning and tolerancing per ASME Y14.5M.
2. This drawing is subject to change without notice.
3. This dimension does not include mold flash, protrusions, or gate burrs. Mold flash, protrusions, or gate burrs shall not exceed 0.15 mm, per side.
4. This dimension does not include interlead flash. Interlead flash shall not exceed 0.43 mm, per side.
5. Reference JEDEC registration MS-012, variation AB.

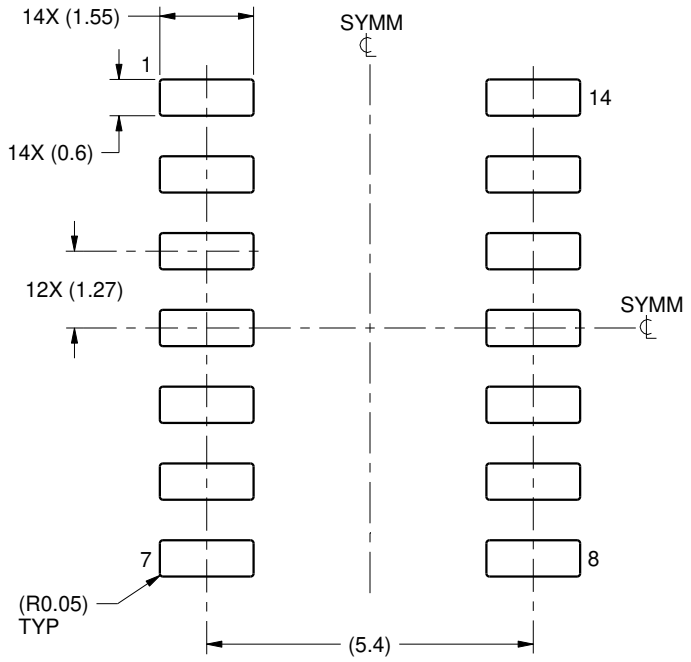

LAND PATTERN EXAMPLE
SCALE:8X

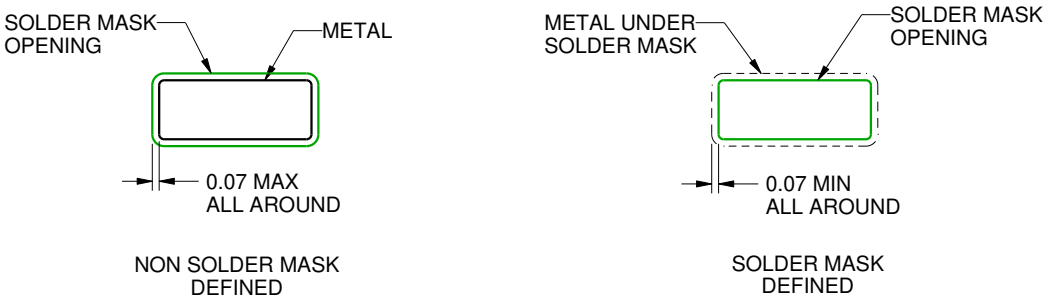

SOLDER MASK DETAILS

4220718/A 09/2016

NOTES: (continued)

6. Publication IPC-7351 may have alternate designs.
7. Solder mask tolerances between and around signal pads can vary based on board fabrication site.

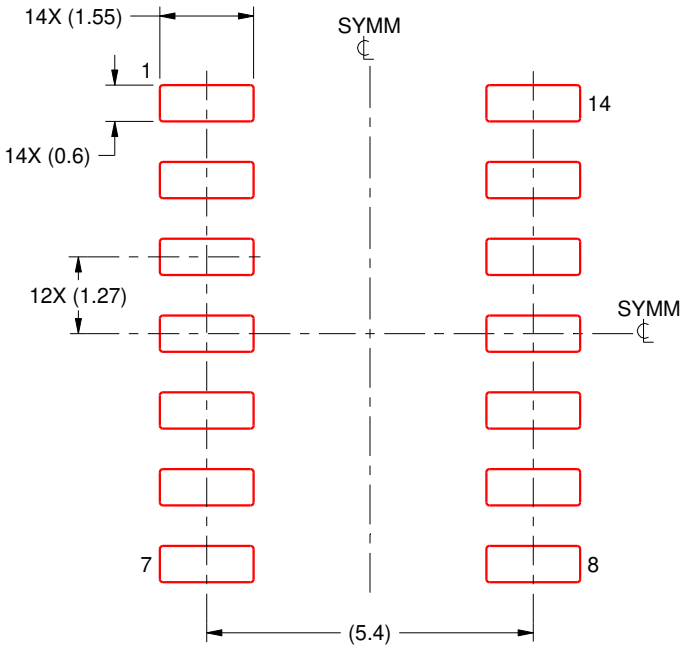

SOLDER PASTE EXAMPLE
BASED ON 0.125 mm THICK STENCIL
SCALE:8X

4220718/A 09/2016

NOTES: (continued)

8. Laser cutting apertures with trapezoidal walls and rounded corners may offer better paste release. IPC-7525 may have alternate design recommendations.
9. Board assembly site may have different recommendations for stencil design.

IMPORTANT NOTICE AND DISCLAIMER

TI PROVIDES TECHNICAL AND RELIABILITY DATA (INCLUDING DATASHEETS), DESIGN RESOURCES (INCLUDING REFERENCE DESIGNS), APPLICATION OR OTHER DESIGN ADVICE, WEB TOOLS, SAFETY INFORMATION, AND OTHER RESOURCES “AS IS” AND WITH ALL FAULTS, AND DISCLAIMS ALL WARRANTIES, EXPRESS AND IMPLIED, INCLUDING WITHOUT LIMITATION ANY IMPLIED WARRANTIES OF MERCHANTABILITY, FITNESS FOR A PARTICULAR PURPOSE OR NON-INFRINGEMENT OF THIRD PARTY INTELLECTUAL PROPERTY RIGHTS.

These resources are intended for skilled developers designing with TI products. You are solely responsible for (1) selecting the appropriate TI products for your application, (2) designing, validating and testing your application, and (3) ensuring your application meets applicable standards, and any other safety, security, regulatory or other requirements.

These resources are subject to change without notice. TI grants you permission to use these resources only for development of an application that uses the TI products described in the resource. Other reproduction and display of these resources is prohibited. No license is granted to any other TI intellectual property right or to any third party intellectual property right. TI disclaims responsibility for, and you fully indemnify TI and its representatives against any claims, damages, costs, losses, and liabilities arising out of your use of these resources.

TI’s products are provided subject to TI’s Terms of Sale, TI’s General Quality Guidelines, or other applicable terms available either on ti.com or provided in conjunction with such TI products. TI’s provision of these resources does not expand or otherwise alter TI’s applicable warranties or warranty disclaimers for TI products. Unless TI explicitly designates a product as custom or customer-specified, TI products are standard, catalog, general purpose devices.

TI objects to and rejects any additional or different terms you may propose.

Copyright © 2026, Texas Instruments Incorporated

Last updated 10/2025