LM5576 75V, 3A, Step-Down Switching Regulator

1 Features

- Ultra-wide input voltage range from 6V to 75V
- Integrated 75V, 170mΩ N-channel MOSFET
- Adjustable output voltage as low as 1.225V
- 1.5% feedback reference accuracy
- Operating frequency adjustable between 50kHz and 500kHz with single resistor
- Controller or peripheral frequency synchronization
- Adjustable soft start
- Emulated current mode control architecture
- Wide bandwidth error amplifier
- Built-in protection
- HTSSOP-20EP (exposed pad)
- Create a custom design using the LM5576 with the WEBENCH® Power Designer

2 Applications

- Industrial

3 Description

The LM5576 is an easy-to-use, buck regulator, which allows design engineers to design and optimize a robust power supply using a minimum set of components. Operating with an input voltage range of 6V to 75V, the LM5576 delivers 3A of continuous output current with an integrated 170mΩ N-Channel MOSFET. The regulator uses an emulated current mode architecture which provides inherent line regulation, tight load transient response, and ease-of-loop compensation without the usual limitation of low-duty cycles associated with current mode regulators. The operating frequency is adjustable from 50kHz to 500kHz to allow optimization of size and efficiency. To reduce EMI, a frequency synchronization pin allows multiple ICs from the LM(2)557x family to self-synchronize or to synchronize to an external clock. The LM5576 makes sure of robustness with cycle-by-cycle current limit, short-circuit protection, thermal shutdown, and remote shutdown. The device is available in a power-enhanced, 20-pin HTSSOP package that features an exposed die attach pad for thermal dissipation. The LM5576 is supported by the full suite of WEBENCH circuit design and selection simulation services online design tools.

Package Information

PART NUMBER	PACKAGE(1)	PACKAGE SIZE(2)
LM5576	PWP (HTSSOP, 20)	6.5mm × 4.4mm

(1) For more information, see Section 10.
(2) The package size (length × width) is a nominal value and includes pins, where applicable.

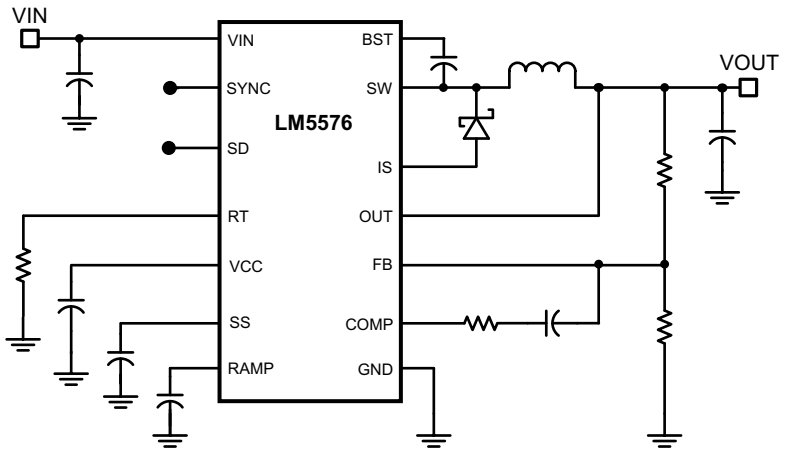

Simplified Application Schematic

An IMPORTANT NOTICE at the end of this data sheet addresses availability, warranty, changes, use in safety-critical applications, intellectual property matters and other important disclaimers. PRODUCTION DATA.

Table of Contents

1 Features....1
2 Applications....1
3 Description....1
4 Pin Configuration and Functions....3
5 Specifications....5
5.1 Absolute Maximum Ratings....5
5.2 ESD Ratings....5
5.3 Recommended Operating Conditions....5
5.4 Thermal Information....5
5.5 Electrical Characteristics....6
5.6 Typical Characteristics....8
6 Detailed Description....10
6.1 Overview....10
6.2 Functional Block Diagram....10
6.3 Feature Description....10
6.4 Device Functional Modes....11
7 Application and Implementation....17
7.1 Application Information....17
7.2 Typical Application....18
7.3 Power Supply Recommendations....26
7.4 Layout....26
8 Device and Documentation Support....29
8.1 Device Support....29
8.2 Receiving Notification of Documentation Updates....29
8.3 Support Resources....29
8.4 Trademarks....29
8.5 Electrostatic Discharge Caution....29
8.6 Glossary....29
9 Revision History....30
10 Mechanical, Packaging, and Orderable Information....30

Copyright © 2025 Texas Instruments Incorporated

4 Pin Configuration and Functions

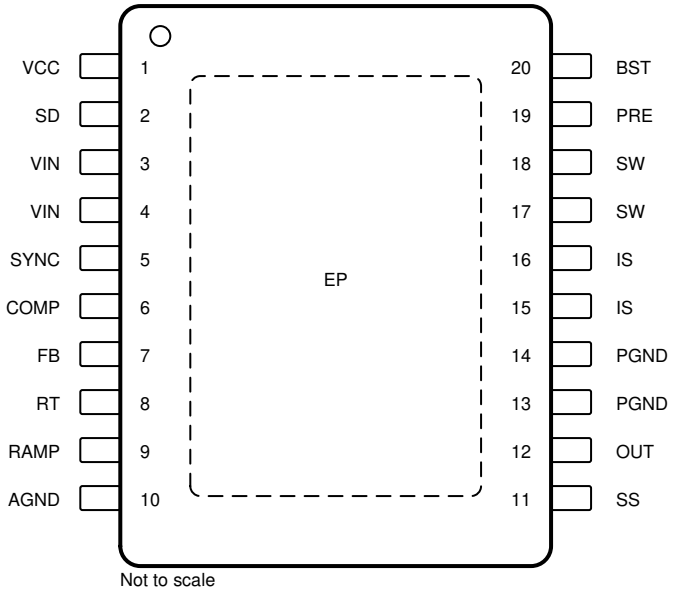

Figure 4-1. PWP Package 20-Pin HTSSOP (Top View)

Table 4-1. Pin Functions

PIN		TYPE[1]	DESCRIPTION	APPLICATION INFORMATION
NO.	NAME			
1	VCC	O	Output of the bias regulator	V_{CC} monitors V_{IN} up to 9 V. Beyond 9 V, V_{CC} is regulated to 7 V. A 0.1-µF to 1-µF ceramic decoupling capacitor is required. An external voltage (7.5 V – 14 V) can be applied to this pin to reduce internal power dissipation.
2	SD	I	Shutdown or UVLO input	If the SD pin voltage is lass than 0.7 V, the regulator is in a low power state. If the SD pin voltage is between 0.7 V and 1.225 V, the regulator is in standby mode. If the SD pin voltage is above 1.225 V, the regulator is operational. An external voltage divider can be used to set a line undervoltage shutdown threshold. If the SD pin is left open circuit, a 5-µA pullup current source configures the regulator fully operational.
3, 4	V_{IN}	I	Input supply voltage	Nominal operating range: 6 V to 75 V
5	SYNC	I	Oscillator synchronization input or output	The internal oscillator can be synchronized to an external clock with an external pulldown device. Multiple LM5576 devices can be synchronized together by connection of the SYNC pins.
6	COMP	O	Output of the internal error amplifier	The loop compensation network must be connected between this pin and the FB pin.
7	FB	I	Feedback signal from the regulated output	This pin is connected to the inverting input of the internal error amplifier. The regulation threshold is 1.225 V.
8	RT	I	Internal oscillator frequency set input	The internal oscillator is set with a single resistor, connected between this pin and the AGND pin.
9	RAMP	O	Ramp control signal	An external capacitor connected between this pin and the AGND pin sets the ramp slope used for current mode control. Recommended capacitor range 50 pF to 2000 pF.
10	AGND	GROUND	Analog ground	Internal reference for the regulator control functions

Copyright © 2025 Texas Instruments Incorporated

Table 4-1. Pin Functions (continued)

PIN		TYPE(1)	DESCRIPTION	APPLICATION INFORMATION
NO.	NAME			
11	SS	O	Soft-start	An external capacitor and an internal 10-µA current source set the time constant for the rise of the error amp reference. The SS pin is held low during standby, V_{CC} UVLO and thermal shutdown.
12	OUT	O	Output voltage connection	Connect directly to the regulated output voltage.
13, 14	PGND	GROUND	Power ground	Low-side reference for the PRE switch and the IS sense resistor.
15, 16	IS	I	Current sense	Current measurement connection for the re-circulating diode. An internal sense resistor and a sample and hold circuit sense the diode current near the conclusion of the off-time. This current measurement provides the DC level of the emulated current ramp.
17, 18	SW	O	Switching node	The source terminal of the internal buck switch. The SW pin must be connected to the external Schottky diode and to the buck inductor.
19	PRE	I	Pre-charge assist for the bootstrap capacitor	This open-drain output can be connected to SW pin to aid charging the bootstrap capacitor during very light load conditions or in applications where the output can be pre-charged before the LM5576 is enabled. An internal pre-charge MOSFET is turned on for 265 ns each cycle just prior to the on-time interval of the buck switch.
20	BST	I	Boost input for bootstrap capacitor	An external capacitor is required between the BST and the SW pins. A 0.022-µF ceramic capacitor is recommended. The capacitor is charged from V_{CC} through an internal diode during the off-time of the buck switch.
NA	EP	GROUND	Exposed Pad	Exposed metal pad on the underside of the device. TI recommends to connect this pad to the PWB ground plane to help in heat dissipation.

(1) I = input, O = output

Copyright © 2025 Texas Instruments Incorporated

5 Specifications

5.1 Absolute Maximum Ratings

over operating free-air temperature range (unless otherwise noted)(1) (2)

	MIN	MAX	UNIT
V_{IN} to GND		76	V
BST to GND		90	V
PRE to GND		76	V
SW to GND (Steady State)		–1.5	V
BST to V_{CC}		76	V
SD, V_{CC} to GND		14	V
BST to SW		14	V
OUT to GND	Limited to V_{IN}		
SYNC, SS, FB, RAMP to GND		7	V
Storage temperature, T_{stg}	–65	150	°C

(1) Operation outside the Absolute Maximum Ratings may cause permanent device damage. Absolute Maximum Ratings do not imply functional operation of the device at these or any other conditions beyond those listed under Recommended Operating Conditions. If used outside the Recommended Operating Conditions but within the Absolute Maximum Ratings, the device may not be fully functional, and this may affect device reliability, functionality, performance, and shorten the device lifetime.
(2) If Military/Aerospace specified devices are required, contact the Texas Instruments Sales Office/Distributors for availability and specifications.

5.2 ESD Ratings

			VALUE	UNIT
$V_{(ESD)}$	Electrostatic discharge(3)	Human body model (HBM), per ANSI/ESDA/JEDEC JS-001, all pins(1)	±2	kV
		Charged-device model (CDM), per JEDEC specification JESD22-C101(2)	±500	V

(1) JEDEC document JEP155 states that 500-V HBM allows safe manufacturing with a standard ESD control process.
(2) JEDEC document JEP157 states that 250V CDM allows safe manufacturing with a standard ESD control process.
(3) The human-body model is a 100-pF capacitor discharged through a 1.5-kΩ resistor into each pin.

5.3 Recommended Operating Conditions

	MIN	MAX	UNIT
V_{IN}	6	75	V
Operation Junction Temperature	−40	125	°C

5.4 Thermal Information

THERMAL METRIC(1)		LM5576 PWP (HTSSOP) 20 PINS	UNIT
$R_{\theta JA}$	Junction-to-ambient thermal resistance	40	°C/W
$R_{\theta JC(top)}$	Junction-to-case (top) thermal resistance	33.6	°C/W
$R_{\theta JB}$	Junction-to-board thermal resistance	6.9	°C/W
Ψ_{JT}	Junction-to-top characterization paramete	1.3	°C/W
Ψ_{JB}	Junction-to-board characterization parameter	14.8	°C/W

(1) For more information about traditional and new thermal metrics, see the *Semiconductor and IC Package Thermal Metrics* application note.

Copyright © 2025 Texas Instruments Incorporated

5.5 Electrical Characteristics

Typical values correspond to T_J = 25°C, V_{IN} = 48 V, R_T = 32.4kΩ. Minimum and maximum limits apply over –40°C to 125°C junction temperature range unless otherwise stated.(1)

PARAMETER		TEST CONDITIONS	MIN	TYP	MAX	UNIT
STARTUP REGULATOR						
V_{CC} Reg	V_{CC} Regulator Output		6.85	7.15	7.45	V
	V_{CC} LDO Mode turn-off			9		V
	V_{CC} Current Limit	V_{CC} = 0 V,		25		mA
VCC SUPPLY						
	V_{CC} UVLO Threshold	VCC Increasing	5.03	5.35	5.67	V
	V_{CC} Undervoltage Hysteresis			0.25		V
	Bias Current (Iin)	FB = 1.3 V.		2	4.5	mA
	Shutdown Current (Iin)	SD = 0 V.		48	85	µA
SHUTDOWN THRESHOLDS						
	Shutdown Threshold		0.47	0.7	0.9	V
	Shutdown Hysteresis			0.1		V
	Standby Threshold		1.17	1.225	1.28	V
	Standby Hysteresis			0.1		V
	SD Pull-up Current Source			5		µA
SWITCH CHARACTERISTICS						
	Buck Switch Rds(on)			170	340	mΩ
	BOOST UVLO			3.8		V
	BOOST UVLO Hysteresis			0.8		V
	Pre-charge Switch Rds(on)			70		Ω
	Pre-charge Switch on-time			265		ns
CURRENT LIMIT						
	Cycle by Cycle Current Limit Delay	RAMP = 2.5 V.		75		ns
SOFT-START						
	SS Current Source		7	10	14	µA
OSCILLATOR						
	Frequency1		180	200	220	kHz
	Frequency2	R_T = 11 kΩ.	425	485	545	kHz
	SYNC Source Impedance			11		kΩ
	SYNC Sink Impedance			110		Ω
	SYNC Threshold (falling)			1.4		V
	SYNC Frequency	R_T = 11 kΩ.	550			kHz
	SYNC Pulse Width Minimum		15			ns
RAMP GENERATOR						
	Ramp Current 1	V_{IN} = 60 V, V_{OUT} = 10 V.	235	275	315	µA
	Ramp Current 1	V_{IN} = 36 V, V_{OUT} = 10 V.	136	160	184	µA
	Ramp Current 2	V_{IN} = 10 V, V_{OUT} = 10 V.	18	25	32	µA
PWM COMPARATOR						
	Forced Off-time		416	500	575	ns
	Min On-time			80		ns
	COMP to PWM Comparator Offset			0.7		V
ERROR AMPLIFIER						
	Feedback Voltage	Vfb = COMP.	1.207	1.225	1.243	µV
	FB Bias Current			10		nA
	DC Gain			70		dB
	COMP Sink / Source Current		3			mA
	Unity Gain Bandwidth			3		MHz

Copyright © 2025 Texas Instruments Incorporated

5.5 Electrical Characteristics (continued)

Typical values correspond to T_J = 25°C, V_{IN} = 48 V, R_T = 32.4kΩ. Minimum and maximum limits apply over –40°C to 125°C junction temperature range unless otherwise stated.(1)

PARAMETER		TEST CONDITIONS	MIN	TYP	MAX	UNIT
DIODE SENSE RESISTANCE						
D_{SENSE}				42		mΩ
THERMAL SHUTDOWN						
Tsd	Thermal Shutdown Threshold			165		°C
	Thermal Shutdown hysteresis			25		°C

(1) Minimum and Maximum limits are 100% production tested at 25°C. Limits over the operating temperature range are ensured through correlation using Statistical Quality Control (SQC) methods. Limits are used to calculate Texas Instruments' Average Outgoing Quality Level (AOQL).

Copyright © 2025 Texas Instruments Incorporated

5.6 Typical Characteristics

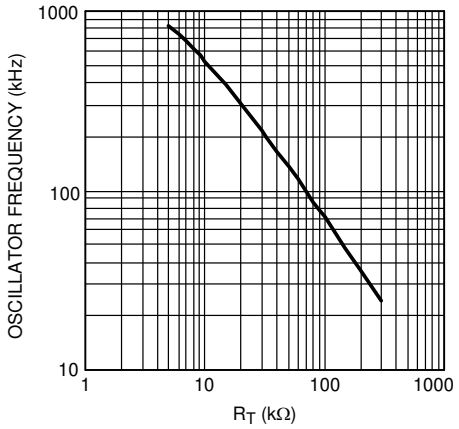

Figure 5-1. Oscillator Frequency vs R_T

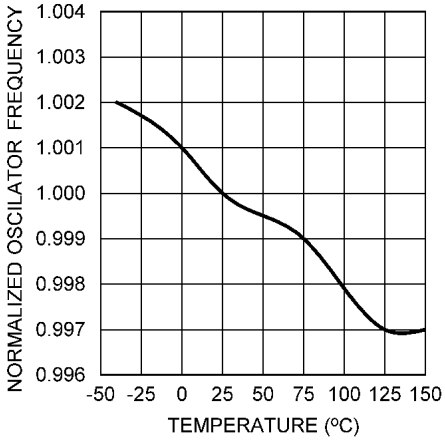

Figure 5-2. Oscillator Frequency vs Temperature (Q0) F_{OSC} = 200 kHz

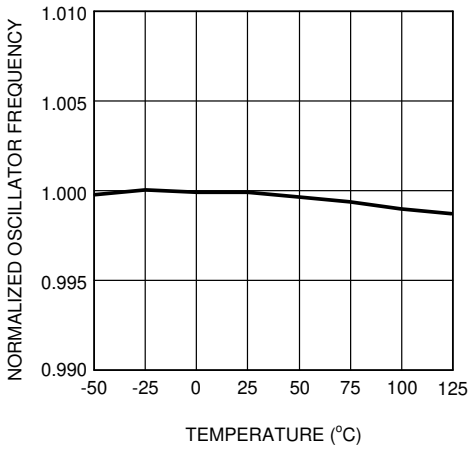

Figure 5-3. Oscillator Frequency vs Temperature (Q1) F_{OSC} = 200 kHz

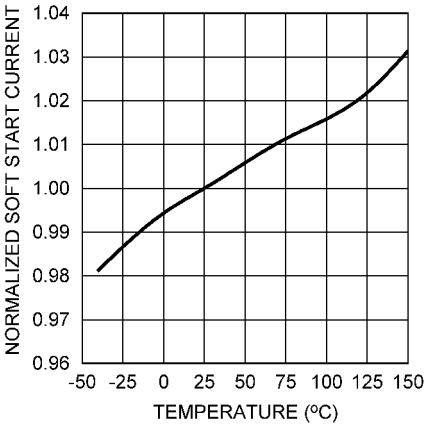

Figure 5-4. Soft-Start Current vs Temperature (Q0)

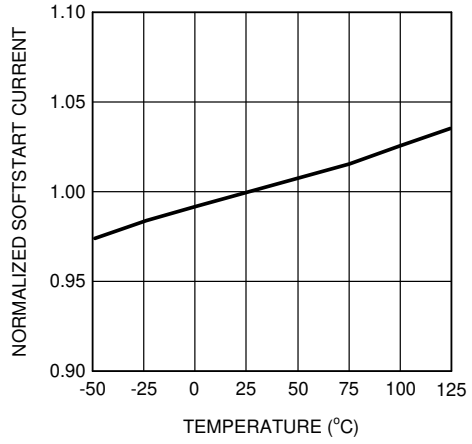

Figure 5-5. Soft-Start Current vs Temperature (Q1)

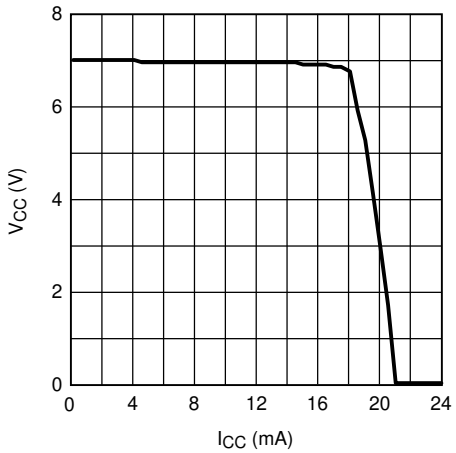

Figure 5-6. V_{CC} vs I_{CC} V_{IN} = 12 V

Copyright © 2025 Texas Instruments Incorporated

5.6 Typical Characteristics (continued)

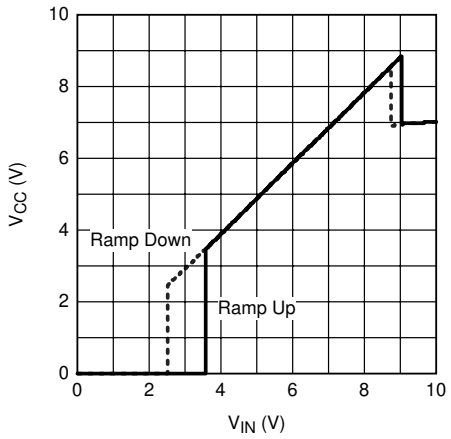

Figure 5-7. V_{CC} vs V_{IN} R_L = 7 kω

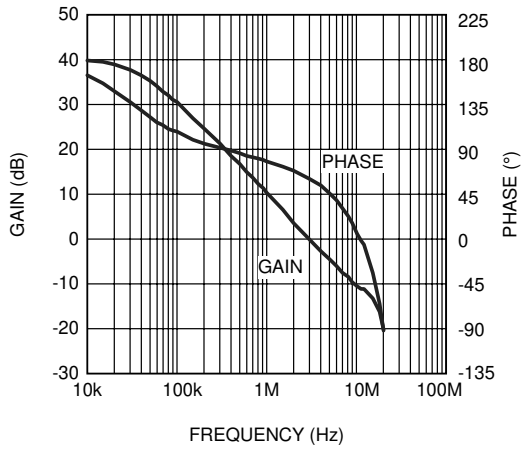

Figure 5-8. Error Amplifier Gain/Phase AVCL = 101

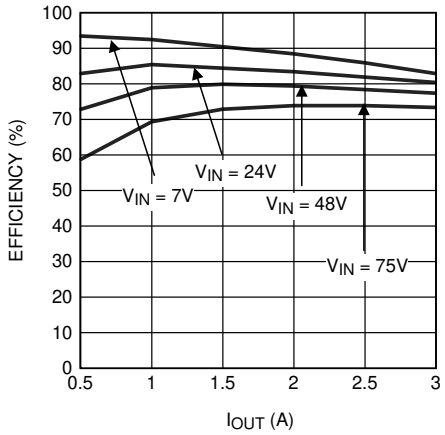

Figure 5-9. Demoboard Efficiency vs I_{OUT} and V_{IN}

Copyright © 2025 Texas Instruments Incorporated

6 Detailed Description

6.1 Overview

The LM5576 switching regulator features all of the functions necessary to implement an efficient high voltage buck regulator using a minimum of external components. This easy to use regulator integrates a 75 V N-Channel buck switch with an output current capability of 3 Amps. The regulator control method is based on current mode control uses an emulated current ramp. Peak current mode control provides inherent line voltage feed-forward, cycle-by-cycle current limiting, and ease-of-loop compensation. The use of an emulated control ramp reduces noise sensitivity of the pulse width modulation circuit, which allows reliable processing of very small duty cycles necessary in high input voltage applications. The operating frequency is user programmable from 50 kHz to 500 kHz. An oscillator synchronization pin allows multiple LM5576 regulators to self-synchronize or be synchronized to an external clock. The output voltage can be set as low as 1.225 V. Fault protection features include current limiting, thermal shutdown, and remote shutdown capability. The device is available in the 20-pin HTSSOP package that features an exposed pad to help thermal dissipation.

The functional block diagram and typical application of the LM5576 are shown in the *Section 6.2* section. The LM5576 can be applied in numerous applications to efficiently step-down a high, unregulated input voltage. The device is designed for telecom, industrial power bus voltage ranges.

6.2 Functional Block Diagram

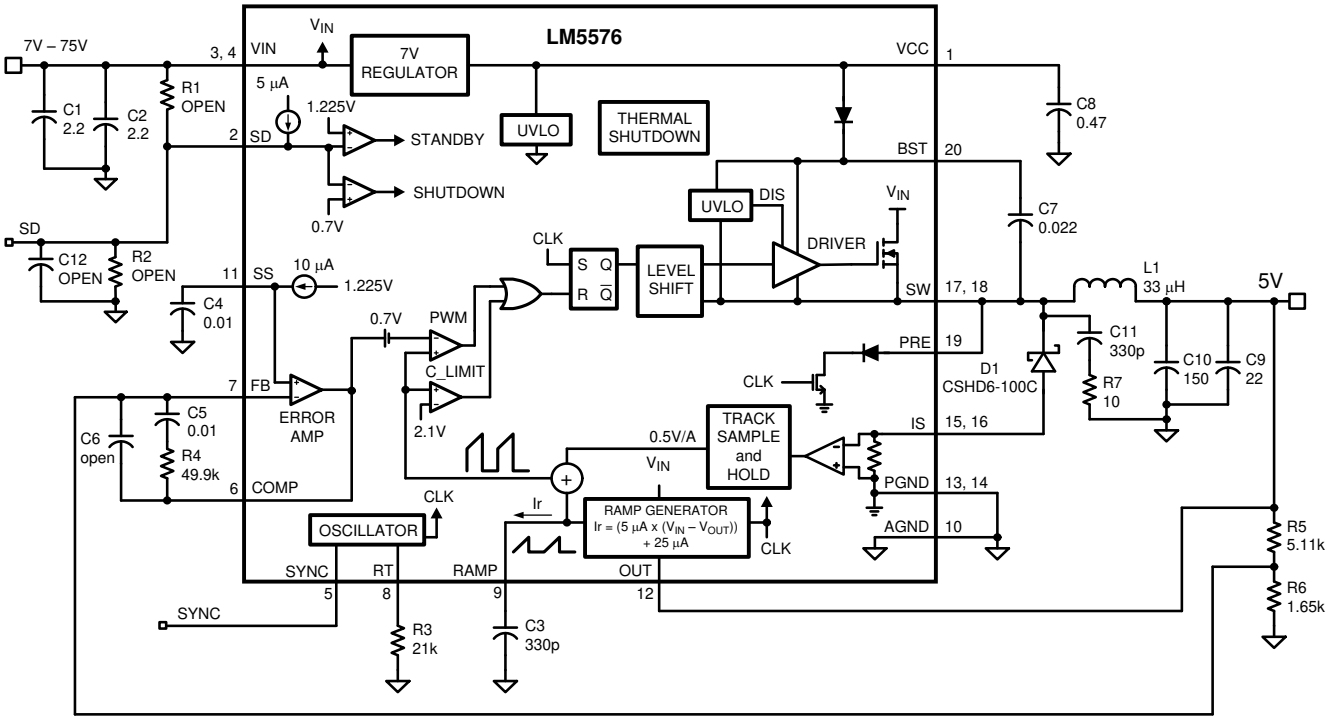

6.3 Feature Description

6.3.1 Shutdown / Standby

The LM5576 contains a dual-level shutdown (SD) circuit. When the SD pin voltage is below 0.7 V, the regulator is in a low current shutdown mode. When the SD pin voltage is greater than 0.7 V but less than 1.225 V, the regulator is in standby mode. In standby mode the V_{CC} regulator is active but the output switch is disabled. When the SD pin voltage exceeds 1.225 V, the output switch is enabled and normal operation begins. An internal 5-µA pullup current source configures the regulator to be fully operational if the SD pin is left open.

An external set-point voltage divider from VIN to GND can be used to set the operational input range of the regulator. The divider must be designed such that the voltage at the SD pin is greater than 1.225 V when V_{IN} is in the desired operating range. The internal 5-µA pullup current source must be included in calculations of the

Copyright © 2025 Texas Instruments Incorporated

external set-point divider. Hysteresis of 0.1 V is included for both the shutdown and standby thresholds. The SD pin is internally clamped with a 1-kΩ resistor and an 8-V Zener clamp. The voltage at the SD pin must never exceed 14 V. If the voltage at the SD pin exceeds 8 V, the bias current will increase at a rate of 1 mA/V.

The SD pin can also be used to implement various remote enable and disable functions. Pulling the SD pin below the 0.7-V threshold totally disables the controller. If the SD pin voltage is more than 1.225 V, the regulator will be operational.

6.3.2 Soft Start

The soft-start feature allows the regulator to gradually reach the initial steady-state operating point, thus reducing start-up stresses and surges. The internal soft-start current source, set to 10 µA, gradually increases the voltage of an external soft-start capacitor connected to the SS pin. The soft-start capacitor voltage is connected to the reference input of the error amplifier. Various sequencing and tracking schemes can be implemented using external circuits that limit or clamp the voltage level of the SS pin.

In the event a fault is detected (overtemperature, V_{CC} UVLO, SD) the soft-start capacitor is discharged. When the fault condition is no longer present a new soft-start sequence commences.

6.3.3 Thermal Protection

Internal Thermal Shutdown circuitry is provided to protect the integrated circuit in the event the maximum junction temperature is exceeded. When activated, typically at 165°C,the controller is forced into a low power reset state, disabling the output driver and the bias regulator. This feature is provided to prevent catastrophic failures from accidental device overheating.

6.4 Device Functional Modes

6.4.1 High Voltage Start-Up Regulator

The LM5576 contains a dual-mode internal high voltage start-up regulator that provides the$_{CC}$ bias supply for the PWM controller and boot-strap MOSFET gate driver. The input pin (VIN) can be connected directly to the input voltage, as high as 75 V. For input voltages less than 9 V, a low dropout switch connects V_{CC} directly to V_{IN}. In this supply range, V_{CC} is approximately equal to V_{IN}. For V_{IN} voltage greater than 9 V, the low dropout switch is disabled and the V_{CC} regulator is enabled to maintain V_{CC} at approximately 7 V. The wide operating range of 6 V to 75 V is achieved through the use of this dual-mode regulator.

The output of the V_{CC} regulator is current limited to 25 mA. Upon power up, the regulator sources current into the capacitor connected to the VCC pin. When the voltage at the VCC pin exceeds the V_{CC} UVLO threshold of 5.35 V and the SD pin is greater than 1.225 V, the output switch is enabled and a soft-start sequence begins. The output switch remains enabled until V_{CC} falls below 5.0 V or the SD pin falls below 1.125 V.

An auxiliary supply voltage can be applied to the VCC pin to reduce the IC power dissipation. If the auxiliary voltage is greater than 7.3 V, the internal regulator will essentially shut off, reducing the IC power dissipation. The V_{CC} regulator series pass transistor includes a diode between V_{CC} and V_{IN} that must not be forward biased in normal operation. Therefore the auxiliary V_{CC} voltage must never exceed the V_{IN} voltage.

In high voltage applications, take extra care to make sure the VIN pin does not exceed the absolute maximum voltage rating of 76 V. During line or load transients, voltage ringing on the V_{IN} line that exceeds the absolute maximum ratings can damage the IC. Both careful printed-circuit board layout and the use of quality bypass capacitors placed close to the VIN and GND pins are essential.

Copyright © 2025 Texas Instruments Incorporated

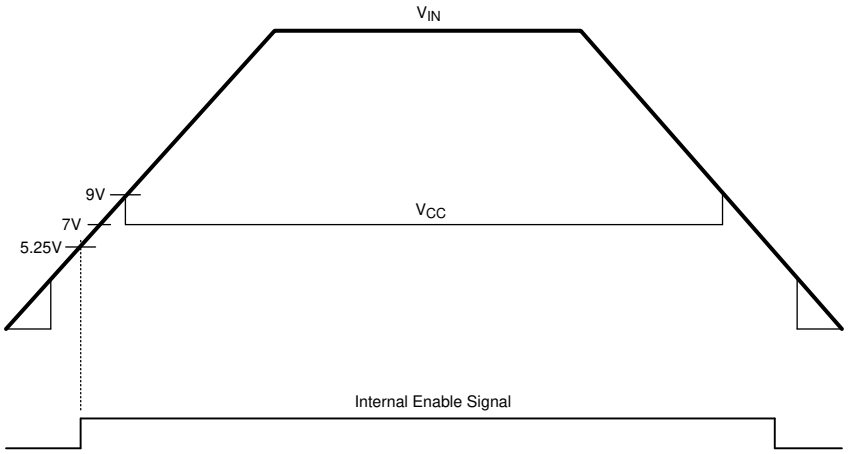

Figure 6-1. V_{IN} and V_{CC} Sequencing

6.4.2 Oscillator and Sync Capability

The LM5576 oscillator frequency is set by a single external resistor connected between the RT pin and the AGND pin. The R_T resistor must be placed very close to the device and connected directly to the pins of the IC (RT and AGND).To set a desired oscillator frequency (F), the necessary value for the R_T resistor can be calculated from Equation 1.

$$R_T = \frac{\frac{1}{F} - 580 \times 10^{-9}}{135 \times 10^{-12}} \quad (1)$$

The SYNC pin can be used to synchronize the internal oscillator to an external clock. The external clock must be of **higher frequency** than the free-running frequency set by the R_T resistor. A clock circuit with an open-drain output is the recommended interface from the external clock to the SYNC pin. The clock pulse duration must be greater than 15 ns.

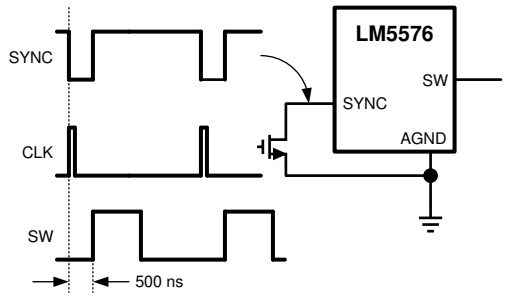

Figure 6-2. Sync From External Clock

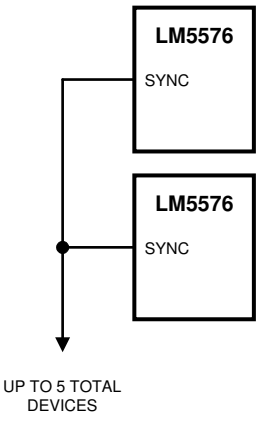

Figure 6-3. Sync From Multiple Devices

Multiple LM5576 devices can be synchronized together simply by connecting the SYNC pins together. In this configuration all of the devices will be synchronized to the highest frequency device. The diagram in Figure 6-4 shows the SYNC input and output features of the LM5576. The internal oscillator circuit drives the SYNC pin with a strong pulldown and weak pullup inverter. When the SYNC pin is pulled low either by the internal oscillator or an external clock, the ramp cycle of the oscillator is terminated and a new oscillator cycle begins. Thus, if the

Copyright © 2025 Texas Instruments Incorporated

SYNC pins of several LM5576 ICs are connected together, the IC with the highest internal clock frequency will pull the connected SYNC pins low first and terminate the oscillator ramp cycles of the other ICs. The LM5576 with the highest programmed clock frequency will serve as the controller and control the switching frequency of the all the devices with lower oscillator frequency.

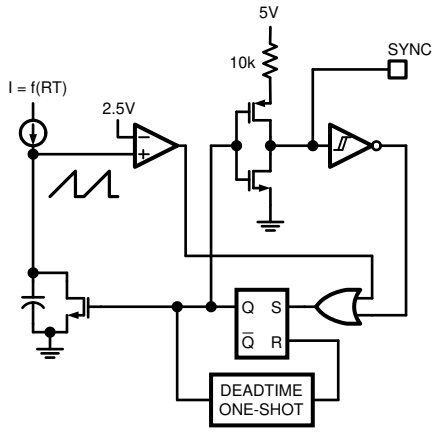

Figure 6-4. Simplified Oscillator Block Diagram and Sync I/O Circuit

6.4.3 Error Amplifier and PWM Comparator

The internal high gain error amplifier generates an error signal proportional to the difference between the regulated output voltage and an internal precision reference (1.225 V). The output of the error amplifier is connected to the COMP pin allowing the user to provide loop compensation components, generally a type II network, as shown in the *Section 6.2* section. This network creates a pole at DC, a zero and a noise-reducing, high-frequency pole. The PWM comparator compares the emulated current sense signal from the RAMP generator to the error amplifier output voltage at the COMP pin.

6.4.4 Ramp Generator

The ramp signal used in the pulse width modulator for current mode control is typically derived directly from the buck switch current. This switch current corresponds to the positive slope portion of the output inductor current. Using this signal for the PWM ramp simplifies the control loop transfer function to a single pole response and provides inherent input voltage feed-forward compensation. The disadvantage of using the buck switch current signal for PWM control is the large leading edge spike due to circuit parasitics that must be filtered or blanked. Also, the current measurement can introduce significant propagation delays. The filtering, blanking time, and propagation delay limit the minimum achievable pulse width. In applications where the input voltage can be relatively large in comparison to the output voltage, controlling small pulse widths and duty cycles is necessary for regulation. The LM5576 uses a unique ramp generator, which does not actually measure the buck switch current but rather reconstructs the signal. Reconstructing or emulating the inductor current provides a ramp signal to the PWM comparator that is free of leading edge spikes and measurement or filtering delays. The current reconstruction is comprised of two elements: a sample and hold DC level and an emulated current ramp.

Copyright © 2025 Texas Instruments Incorporated

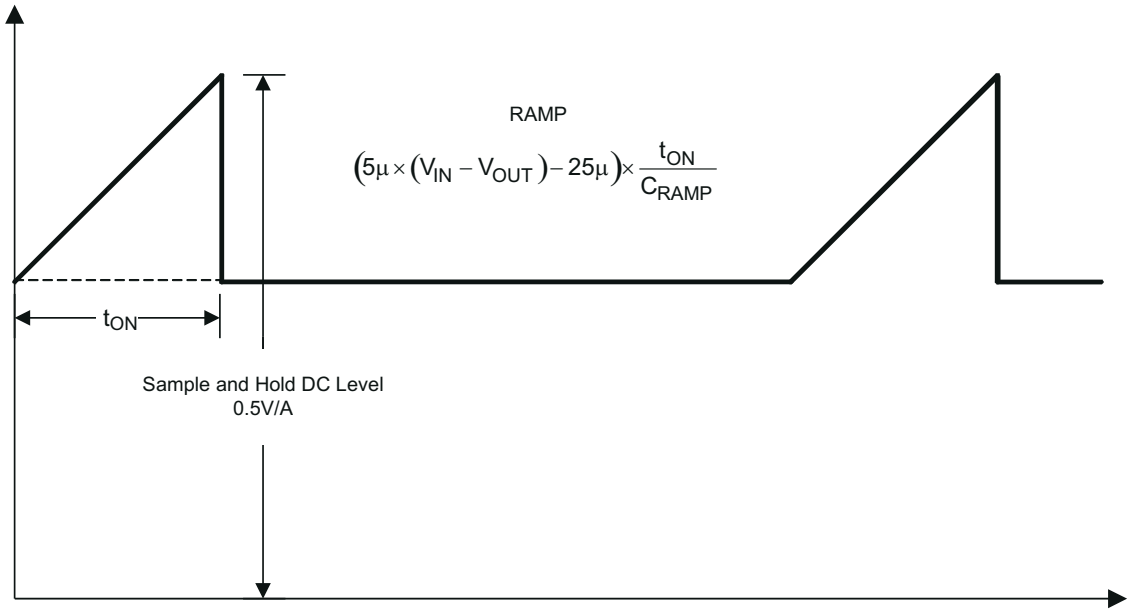

Figure 6-5. Composition of Current Sense Signal

The sample and hold DC level shown in Figure 6-5 is derived from a measurement of the re-circulating Schottky diode anode current. The re-circulating diode anode must be connected to the IS pin. The diode current flows through an internal current sense resistor between the IS and PGND pins. The voltage level across the sense resistor is sampled and held just prior to the onset of the next conduction interval of the buck switch. The diode current sensing and sample and hold provide the DC level of the reconstructed current signal. The positive slope inductor current ramp is emulated by an external capacitor connected from the RAMP pin to AGND and an internal voltage controlled current source. The ramp current source that emulates the inductor current is a function of the V_{IN} and V_{OUT} voltages per Equation 2.

$$I_{RAMP} = (5\ \mu \times (V_{IN} - V_{OUT})) + 25\ \mu A \quad (2)$$

Proper selection of the RAMP capacitor depends upon the selected value of the output inductor. Use Equation 3 to select a value of C_{RAMP}.

$$C_{RAMP} = L \times 10^{-5} \quad (3)$$

where

- L is the value of the output inductor in Henrys

With this value, the scale factor of the emulated current ramp will be approximately equal to the scale factor of the DC level sample and hold (0.5 V/A). The C_{RAMP} capacitor must be placed very close to the device and connected directly to the pins of the IC (RAMP and AGND).

For duty cycles greater than 50%, peak current mode control circuits are subject to sub-harmonic oscillation. Sub-harmonic oscillation is normally characterized by observing alternating wide and narrow pulses at the switch node. Adding a fixed slope voltage ramp (slope compensation) to the current sense signal prevents this oscillation. The 25 µA of offset current provided from the emulated current source adds some fixed slope to the ramp signal. In some high output voltage, high duty cycle applications, additional slope can be required. In these applications, a pullup resistor can be added between the V_{CC} and RAMP pins to increase the ramp slope compensation.

For V_{OUT} > 7.5 V:

Calculate optimal slope current, $I_{OS} = V_{OUT} \times 5\ \mu A/V$.

Copyright © 2025 Texas Instruments Incorporated

For example, at V_{OUT} = 10 V, I_{OS} = 50 µA.

Use Equation 4 to install a resistor from the RAMP pin to V_{CC}:

$$R_{RAMP} = V_{CC} / (I_{OS} – 25\ \mu A) \quad (4)$$

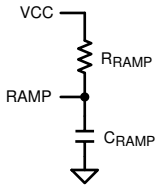

Figure 6-6. R_{RAMP} to V_{CC} for V_{OUT} > 7.5 V

Note that the emulated ramp signal on C_{RAMP} is applied to the current limit comparator as described in the *Section 6.4.7*. Increasing the ramp slope will result in lower current limit threshold. This can lower the output current capability of the part to less than 3 A in some conditions. The resulting current limit threshold can be calculated by Equation 5.

$$I_{CL} = \frac{V_{CL} - \left[\left(V_{IN} - V_{OUT}\right) \times g_m + Ioffset + \frac{Vcc}{R_{RAMP}}\right] \times D \times T}{A \times Rs} + \frac{1}{2}\left[\frac{V_{OUT} \times T \times (1-D)}{L}\right] \quad (5)$$

where

- V_{CL} = 2.1 V
- gm = 5 µA/V
- Ioffset = 25 µA
- A x Rs = 0.5 V/A
- V_{CC} = 7 V
- T = switching period
- D = duty cycle (approximately V_{OUT} / V_{IN})
- L = inductor value
- C_{RAMP} = ramp capacitor value
- R_{RAMP} = ramp resistor value

If the recommended C_{RAMP} and R_{RAMP} values are used, then Equation 6 can calculate the current limit threshold:

$$I_{CL} = \frac{V_{CL}}{A \times Rs} - \frac{1}{2}\left[\frac{V_{OUT} \times T \times (1+D)}{L}\right] \quad (6)$$

6.4.5 Maximum Duty Cycle / Input Dropout Voltage

There is a forced off-time of 500 ns implemented each cycle to ensure sufficient time for the diode current to be sampled. This forced off-time limits the maximum duty cycle of the buck switch. The maximum duty cycle varies with the operating frequency (see Equation 7).

$$D_{MAX} = 1 – Fs \times 500\ ns \quad (7)$$

where

- Fs is the oscillator frequency

Copyright © 2025 Texas Instruments Incorporated

Limiting the maximum duty cycle raises the input dropout voltage. The input dropout voltage is the lowest input voltage required to maintain regulation of the output voltage. Use Equation 8 to calculate an approximation of the input dropout voltage.

$$Vin_{MIN} = \frac{Vout + V_D}{1 - Fs \times 500\ ns} \quad (8)$$

where

- V_D is the voltage drop across the re-circulatory diode

Operating at high switching frequency raises the minimum input voltage necessary to maintain regulation.

6.4.6 Boost Pin

The LM5576 integrates an N-Channel buck switch and associated floating high voltage level shift / gate driver. This gate driver circuit works in conjunction with an internal diode and an external bootstrap capacitor. A 0.022-µF ceramic capacitor, connected with short traces between the BST pin and SW pin, is recommended. During the off-time of the buck switch, the SW pin voltage is approximately –0.5 V and the bootstrap capacitor is charged from V_{CC} through the internal bootstrap diode. When operating with a high PWM duty cycle, the buck switch will be forced off each cycle for 500 ns to ensure that the bootstrap capacitor is recharged.

Under very light load conditions or when the output voltage is pre-charged, the SW voltage will not remain low during the off-time of the buck switch. If the inductor current falls to zero and the SW pin rises, the bootstrap capacitor will not receive sufficient voltage to operate the buck switch gate driver. For these applications, the PRE pin can be connected to the SW pin to pre-charge the bootstrap capacitor. The internal pre-charge MOSFET and diode connected between the PRE pin and PGND turns on each cycle for 265 ns just prior to the onset of a new switching cycle. If the SW pin is at a normal negative voltage level (continuous conduction mode), then no current will flow through the pre-charge MOSFET/diode. For output voltages more than 5 V, a minimum load current can still be required to ensure that the SW voltage is pulled low enough to recharge the bootstrap capacitor.

6.4.7 Current Limit

The LM5576 contains a unique current monitoring scheme for control and overcurrent protection. When set correctly, the emulated current sense signal provides a signal which is proportional to the buck switch current with a scale factor of 0.5 V/A. The emulated ramp signal is applied to the current limit comparator. If the emulated ramp signal exceeds 2.1 V (4.2 A) the present current cycle is terminated (cycle-by-cycle current limiting). In applications with small output inductance and high input voltage the switch current can overshoot due to the propagation delay of the current limit comparator. If an overshoot must occur, the diode current sampling circuit will detect the excess inductor current during the off-time of the buck switch. If the sample and hold DC level exceeds the 2.1-V current limit threshold, the buck switch will be disabled and skip pulses until the diode current sampling circuit detects the inductor current has decayed below the current limit threshold. This approach prevents current runaway conditions due to propagation delays or inductor saturation because the inductor current is forced to decay following any current overshoot.

Copyright © 2025 Texas Instruments Incorporated

7 Application and Implementation

Note

Information in the following applications sections is not part of the TI component specification, and TI does not warrant its accuracy or completeness. TI's customers are responsible for determining suitability of components for their purposes, as well as validating and testing their design implementation to confirm system functionality.

7.1 Application Information

7.1.1 Bias Power Dissipation Reduction

Buck regulators operating with high input voltage can dissipate an appreciable amount of power for the bias of the IC. The V_{CC} regulator must step-down the input voltage V_{IN} to a nominal V_{CC} level of 7 V. The large voltage drop across the V_{CC} regulator translates into a large power dissipation within the regulator. There are several techniques that can significantly reduce this bias regulator power dissipation. Figure 7-1 and V_{CC} Figure 7-2 depict two methods to bias the IC from the output voltage. In each case the internal V_{CC} regulator is used to initially bias the VCC pin. After the output voltage is established, the VCC pin potential is raised above the nominal 7-V regulation level, which effectively disables the internal V_{CC} regulator. The voltage applied to the VCC pin must never exceed 14 V. The V_{CC} voltage must never be larger than the V_{IN} voltage.

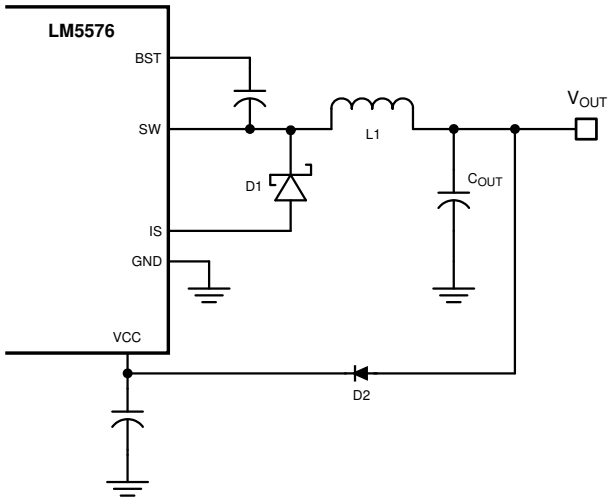

Figure 7-1. V_{CC} Bias From V_{OUT} for 8 V < V_{OUT} < 14 V

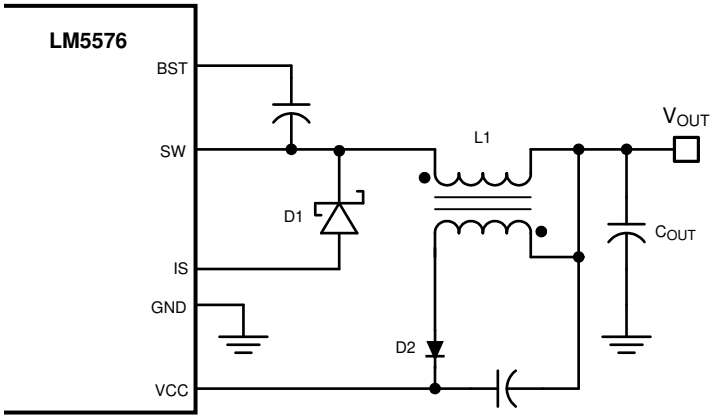

Figure 7-2. V_{CC} Bias With Additional Winding on the Output Inductor

7.2 Typical Application

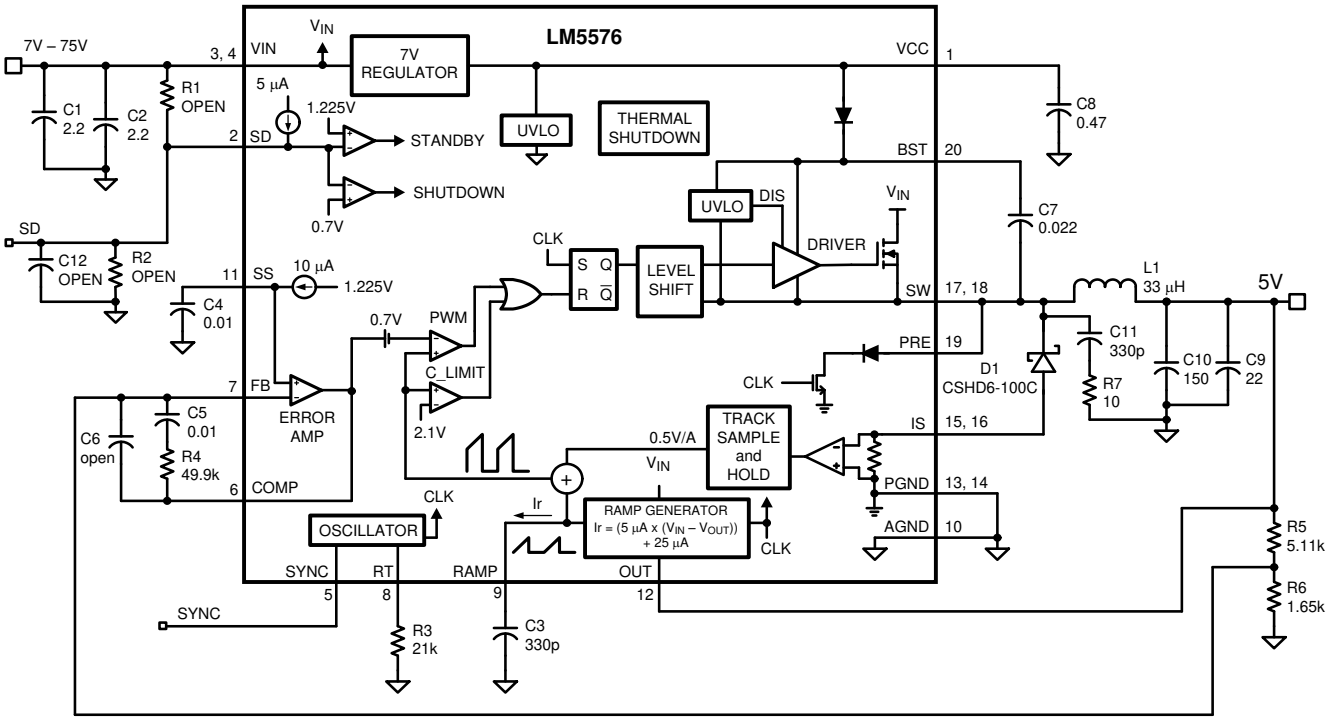

Figure 7-3. Typical Application

7.2.1 Design Requirements

The circuit shown in Figure 7-3 is configured for the following specifications:

- V_{OUT} = 5 V
- V_{IN} = 7 V to 75 V
- Fs = 300 kHz
- Minimum load current (for CCM) = 250 mA
- Maximum load current = 3 A

7.2.2 Detailed Design Procedure

7.2.2.1 Custom Design With WEBENCH® Tools

Click here to create a custom design using the LM5576 device with the WEBENCH® Power Designer.

1. Start by entering the input voltage (V_{IN}), output voltage (V_{OUT}), and output current (I_{OUT}) requirements.
2. Optimize the design for key parameters such as efficiency, footprint, and cost using the optimizer dial.
3. Compare the generated design with other possible solutions from Texas Instruments.

The WEBENCH Power Designer provides a customized schematic along with a list of materials with real-time pricing and component availability.

In most cases, these actions are available:

- Run electrical simulations to see important waveforms and circuit performance
- Run thermal simulations to understand board thermal performance
- Export customized schematic and layout into popular CAD formats
- Print PDF reports for the design, and share the design with colleagues

Get more information about WEBENCH tools at www.ti.com/WEBENCH.

Copyright © 2025 Texas Instruments Incorporated

7.2.2.2 External Components

The procedure for calculating the external components is shown with the following design example. The Bill of Materials for this design is listed in Table 7-1.

Table 7-1. 5 V, 3 A Demo Board Bill of Materials

ITEM		PART NUMBER	DESCRIPTION	VALUE
C	1	C4532X7R2A225M	CAPACITOR, CER, TDK	2.2 µ, 100 V
C	2	C4532X7R2A225M	CAPACITOR, CER, TDK	2.2 µ, 100 V
C	3	C0805C331G1GAC	CAPACITOR, CER, KEMET	330 p, 100 V
C	4	C2012X7R2A103K	CAPACITOR, CER, TDK	0.01 µ, 100 V
C	5	C2012X7R2A103K	CAPACITOR, CER, TDK	0.01 µ, 100 V
C	6	OPEN	NOT USED	
C	7	C2012X7R2A223K	CAPACITOR, CER, TDK	0.022 µ, 100 V
C	8	C2012X7R1C474M	CAPACITOR, CER, TDK	0.47 µ, 16 V
C	9	C3225X7R1C226M	CAPACITOR, CER, TDK	22 µ, 16 V
C	10	EEFHE0J151R	CAPACITOR, SP, PANASONIC	150 µ, 6.3 V
C	11	C0805C331G1GAC	CAPACITOR, CER, KEMET	330 p, 100 V
C	12	OPEN	NOT USED	
D	1	CSHD6-100C	DIODE, 100V, CENTRAL	
		6CWQ10FN	DIODE, 100V, IR (D1-ALT)	
L	1	DR127-330	INDUCTOR, COOPER	33 µH
R	1	OPEN	NOT USED	
R	2	OPEN	NOT USED	
R	3	CRCW08052102F	RESISTOR	21 kΩ
R	4	CRCW08054992F	RESISTOR	49.9 kΩ
R	5	CRCW08055111F	RESISTOR	5.11 kΩ
R	6	CRCW08051651F	RESISTOR	1.65 kΩ
R	7	CRCW2512100J	RESISTOR	10, 1 W
U	1	LM5576	REGULATOR, TEXAS INSTRUMENTS	

7.2.2.3 R3 (R_T)

R_T sets the oscillator switching frequency. Generally, higher frequency applications are smaller but have higher losses. Operation at 300 kHz was selected for this example as a reasonable compromise for both small size and high efficiency. The value of R_T for 300-kHz switching frequency can be calculated by Equation 9:

$$R_T = \frac{\left(\left(\frac{1}{300 \times 10^3}\right) - 580 \times 10^{-9}\right)}{135 \times 10^{-12}} \tag{9}$$

The nearest standard value of 21 kΩ was chosen for R_T.

7.2.2.4 L1

The inductor value is determined based on the operating frequency, load current, ripple current, and the minimum and maximum input voltage ($V_{IN(min)}$, $V_{IN(max)}$).

Copyright © 2025 Texas Instruments Incorporated

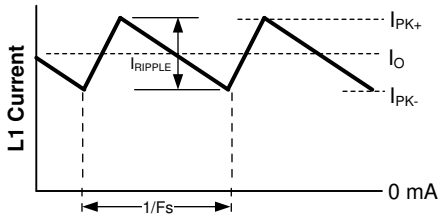

Figure 7-4. Inductor Current Waveform

To keep the circuit in continuous conduction mode (CCM), the maximum ripple current I_{RIPPLE} must be less than twice the minimum load current, or 0.5 Ap-p. With this value of ripple current, use Equation 10 and Equation 11 to calculate the value of inductor (L1).

$$L1 = \frac{V_{OUT} \times \left(V_{IN(max)} - V_{OUT}\right)}{I_{RIPPLE} \times F_S \times V_{IN(max)}} \tag{10}$$

$$L1 = \frac{5V \text{ x } (75V - 5V)}{0.5A \text{ x } 300 \text{ kHz x } 75V} = 31 \text{ µH} \tag{11}$$

This procedure provides a guide to select the value of L1. The nearest standard value (33 µH) is used. L1 must be rated for the peak current (I_{PK+}) to prevent saturation. During normal loading conditions, the peak current occurs at maximum load current plus maximum ripple. During an overload condition the peak current is limited to 4.2 A nominal (5.1 A maximum). The selected inductor (see Table 7-1) has a conservative 6.2-Amp saturation current rating. For this manufacturer, the saturation rating is defined as the current necessary for the inductance to reduce by 30%, at 20°C.

7.2.2.5 C3 (C_{RAMP})

With the inductor value selected, use Equation 12 to calculate the value of C3 (C_{RAMP}) necessary for the emulation ramp circuit.

$$C_{RAMP} = L \times 10^{-5} \tag{12}$$

where

- L is in Henrys

With L1 selected for 33 µH the recommended value for C3 is 330 pF.

7.2.2.6 C9, C10

The output capacitors, C9 and C10, smooth the inductor ripple current and provide a source of charge for transient loading conditions. For this design, a 22-µF ceramic capacitor and a 150-µF SP organic capacitor were selected. The ceramic capacitor provides ultra-low ESR to reduce the output ripple voltage and noise spikes, while the SP capacitor provides a large bulk capacitance in a small volume for transient loading conditions. Use Equation 13 to calculate an approximation for the output ripple voltage.

$$\Delta V_{OUT} = \Delta I_L \text{ x } \left(ESR + \frac{1}{8 \text{ x } F_S \text{ x } C_{OUT}}\right) \tag{13}$$

Copyright © 2025 Texas Instruments Incorporated

7.2.2.7 D1

A Schottky type re-circulating diode is required for all LM5576 applications. Ultra-fast diodes are not recommended and can result in damage to the IC due to reverse recovery current transients. The near ideal reverse recovery characteristics and low forward voltage drop are particularly important diode characteristics for high input voltage and low output voltage applications common to the LM5576. The reverse recovery characteristic determines how long the current surge lasts each cycle when the buck switch is turned on. The reverse recovery characteristics of Schottky diodes minimize the peak instantaneous power in the buck switch occurring during turn-on each cycle. The resulting switching losses of the buck switch are significantly reduced when using a Schottky diode. The reverse breakdown rating must be selected for the maximum V_{IN}, plus some safety margin.

The forward voltage drop has a significant impact on the conversion efficiency, especially for applications with a low output voltage. *Rated* current for diodes vary widely from various manufacturers. The worst case is to assume a short-circuit load condition. In this case, the diode carries the output current almost continuously. For the LM5576, this current can be as high as 4.2 A. Assuming a worst-case, 1-V drop across the diode, the maximum diode power dissipation can be as high as 4.2 W. For the reference design, a 100-V Schottky in a DPAK package was selected.

7.2.2.8 C1, C2

The regulator supply voltage has a large source impedance at the switching frequency. Good-quality input capacitors are necessary to limit the ripple voltage at the VIN pin while supplying most of the switch current during the on-time. When the buck switch turns on, the current into the VIN pin steps to the lower peak of the inductor current waveform, ramps up to the peak value, then drops to zero at turnoff. The average current into VIN during the on-time is the load current. The input capacitance must be selected for RMS current rating and minimum ripple voltage. A good approximation for the required ripple current rating necessary is $I_{RMS} > I_{OUT} / 2$.

Quality ceramic capacitors with a low ESR must be selected for the input filter. To allow for capacitor tolerances and voltage effects, two 2.2-µF, 100-V ceramic capacitors will be used. If step input voltage transients are expected near the maximum rating of the LM5576, a careful evaluation of ringing and possible spikes at the device VIN pin must be completed. An additional damping network or input voltage clamp can be required in these cases.

7.2.2.9 C8

The capacitor at the VCC pin provides noise filtering and stability for the V_{CC} regulator. The recommended value of C8 must be no smaller than 0.1 µF, and must be a good-quality, low-ESR, ceramic capacitor. A value of 0.47 µF was selected for this design.

7.2.2.10 C7

The bootstrap capacitor between the BST and the SW pins supplies the gate current to charge the buck switch gate at turnon. The recommended value of C7 is 0.022 µF, and must be a good-quality, low-ESR, ceramic capacitor.

7.2.2.11 C4

The capacitor at the SS pin determines the soft-start time, that is, the time for the reference voltage and the output voltage, to reach the final regulated value. Equation 14 determines the time.

$$t_{SS} = \frac{C4 \times 1.225\,V}{10\,\mu A} \tag{14}$$

For this application, a C4 value of 0.01 µF was chosen which corresponds to a soft-start time of 1 ms.

7.2.2.12 R5, R6

R5 and R6 set the output voltage level. Use Equation 15 to calculate the ratio of these resistors.

$$R5/R6 = (V_{OUT} / 1.225\ V) - 1 \tag{15}$$

Copyright © 2025 Texas Instruments Incorporated

For a 5-V output, the R5/R6 ratio calculates to 3.082. The resistors must be chosen from standard value resistors. A good starting point is selection in the range of 1.0 kΩ to 10 kΩ. Values of 5.11 kΩ for R5, and 1.65 kΩ for R6 were selected.

7.2.2.13 R1, R2, C12

A voltage divider can be connected to the SD pin to set a minimum operating voltage $V_{IN\ (min)}$ for the regulator. If this feature is required, the easiest approach to select the divider resistor values is to select a value for R1 (between 10 kΩ and 100 kΩ recommended) then calculate R2 from Equation 16.

$$R2 = 1.225 \times \left(\frac{R1}{V_{IN(min)} + (5 \times 10^{-6} \times R1) - 1.225} \right) \tag{16}$$

Capacitor C12 provides filtering for the divider. The voltage at the SD pin must never exceed 8 V, when using an external set-point divider it can be necessary to clamp the SD pin at high input voltage conditions. The reference design uses the full range of the LM5576 (6 V to 75 V); therefore these components can be omitted. With the SD pin open circuit, the LM5576 responds after the V_{CC} UVLO threshold is satisfied.

7.2.2.14 R7, C11

A snubber network across the power diode reduces ringing and spikes at the switching node. Excessive ringing and spikes can cause erratic operation and couple spikes and noise to the output. Voltage spikes beyond the rating of the LM5576 or the re-circulating diode can damage these devices. Selecting the values for the snubber is best accomplished through empirical methods. First, make sure the lead lengths for the snubber connections are very short. For the current levels typical for the LM5576, a resistor value between 5 Ω and 20 Ω is adequate. Increasing the value of the snubber capacitor results in more damping but higher losses. Select a minimum value of C11 that provides adequate damping of the SW pin waveform at high load.

7.2.2.15 R4, C5, C6

These components configure the error amplifier gain characteristics to accomplish a stable overall loop gain. One advantage of current mode control is the ability to close the loop with only two feedback components, R4 and C5. The overall loop gain is the product of the modulator gain and the error amplifier gain. Use Equation 17 to calculate the DC modulator gain of the LM5576.

$$DC\ Gain_{(MOD)} = G_{m(MOD)} \times R_{LOAD} = 2 \times R_{LOAD} \tag{17}$$

The dominant low frequency pole of the modulator is determined by the load resistance (R_{LOAD},) and output capacitance (C_{OUT}). Use Equation 18 to calculate the corner frequency of this pole.

$$f_{p(MOD)} = 1 / (2\pi\ R_{LOAD}\ C_{OUT}) \tag{18}$$

For R_{LOAD} = 5 Ω and C_{OUT} = 177 µF, then $f_{p(MOD)}$ = 180 Hz

$DC\ Gain_{(MOD)}$ = 2 × 5 = 10 = 20 dB

For the design example of Figure 7-3 the measured modulator gain vs. frequency characteristic is shown in Figure 7-5.

Copyright © 2025 Texas Instruments Incorporated

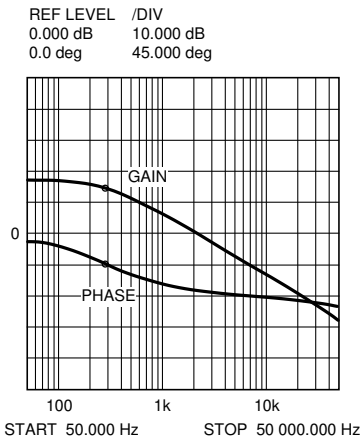

Figure 7-5. Gain and Phase of Modulator R = 5 Ω and C = 177 µF Loadout

Components R4 and C5 configure the error amplifier as a type II configuration that has a pole at DC and a zero at f_Z = 1 / (2πR4C5). The error amplifier zero cancels the modulator pole, which leaves a single pole response at the crossover frequency of the loop gain. A single pole response at the crossover frequency yields a very stable loop with 90 degrees of phase margin.

For the design example, a target loop bandwidth (crossover frequency) of 20 kHz was selected. The compensation network zero (f_Z) must be selected at least an order of magnitude less than the target crossover frequency. This constrains the product of R4 and C5 for a desired compensation network zero 1 / (2π R4 C5) to be less than 2 kHz. Increasing R4, while proportionally decreasing C5, increases the error amp gain. Conversely, decreasing R4 while proportionally increasing C5, decreases the error amp gain. For the design example C5 was selected for 0.01 µF and R4 was selected for 49.9 kΩ. These values configure the compensation network zero at 320 Hz. The error amp gain at frequencies greater than f_Z is: R4 / R5, which is approximately 10 (20 dB).

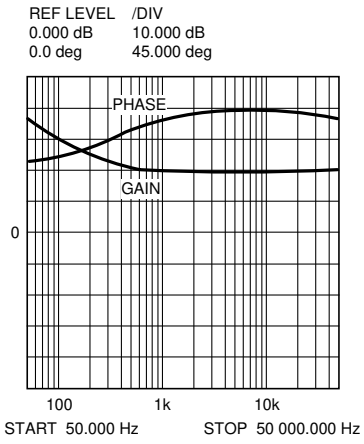

Figure 7-6. Error Amplifier Gain and Phase

The overall loop can be predicted as the sum (in dB) of the modulator gain and the error amp gain.

Copyright © 2025 Texas Instruments Incorporated

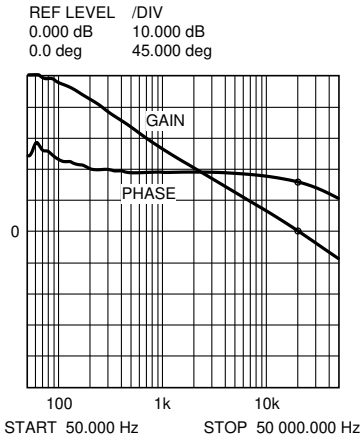

Figure 7-7. Overall Loop Gain and Phase

If a network analyzer is available, the modulator gain can be measured and the error amplifier gain can be configured for the desired loop transfer function. If a network analyzer is not available, the error amplifier compensation components can be designed with the guidelines given. Step load transient tests can be performed to verify acceptable performance. The step load goal is minimum overshoot with a damped response. C6 can be added to the compensation network to decrease noise susceptibility of the error amplifier. The value of C6 must be sufficiently small because the addition of this capacitor adds a pole in the error amplifier transfer function. This pole must be well beyond the loop crossover frequency. Use Equation 19 to calculate a good approximation of the location of the pole added by C6.

$$f_{p2} = fz \times C5 / C6. \quad (19)$$

Copyright © 2025 Texas Instruments Incorporated

7.2.3 Application Curves

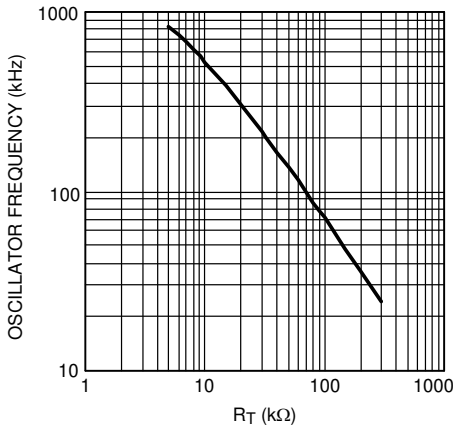

Figure 7-8. Oscillator Frequency vs R_T

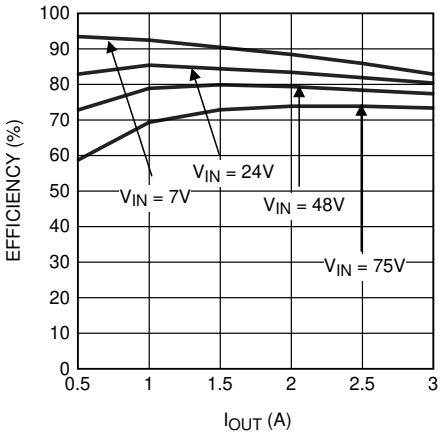

Figure 7-9. Demoboard Efficiency vs I_{OUT} and V_{IN}

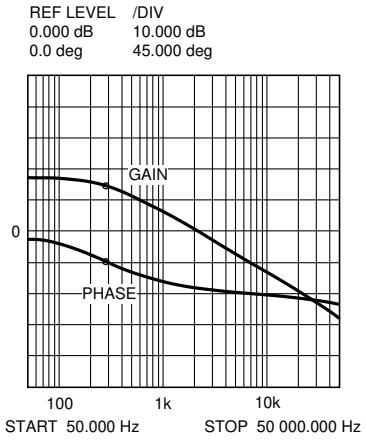

Figure 7-10. Gain and Phase of Modulator R = 5 Ω and C = 177 µF Loadout

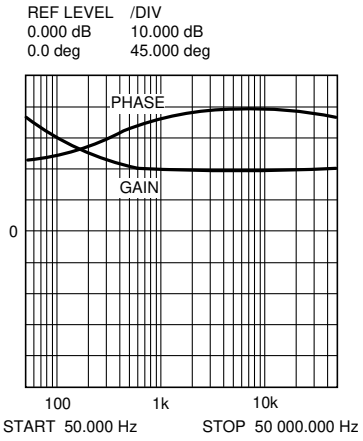

Figure 7-11. Error Amplifier Gain and Phase

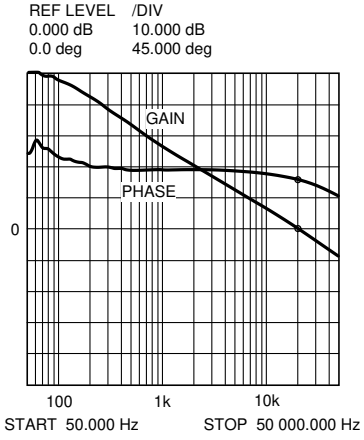

Figure 7-12. Overall Loop Gain and Phase

7.3 Power Supply Recommendations

The characteristics of the input supply must be compatible with the specifications found in this data sheet. In addition, the input supply must be capable of delivering the required input current to the loaded regulator. The average input current can be estimated with the following equation

$$I_{IN} = \frac{V_{OUT} \times I_{OUT}}{\eta \times V_{IN}}$$

Where η is the efficiency.

If the regulator is connected to the input supply through long wires or PCB traces, special care is required to achieve good performance. The parasitic inductance and resistance of the input cables can have an adverse effect on the operation of the regulator. The parasitic inductance, in combination with the low-ESR, ceramic input capacitors, can form an underdamped resonant circuit, resulting in overvoltage transients at the input to the regulator. The parasitic resistance can cause the voltage at the VIN pin to dip whenever a load transient is applied to the output. If the application is operating close to the minimum input voltage, this dip can cause the regulator to momentarily shut down and reset. The best way to solve these kinds of issues is to limit the distance from the input supply to the regulator or plan to use an aluminum or tantalum input capacitor in parallel with the ceramics. The moderate ESR of these types of capacitors help dampen the input resonant circuit and reduce any overshoots. A value in the range of 20µF to 100µF is usually sufficient to provide input damping and help to hold the input voltage steady during large load transients.

Sometimes, for other system considerations, an input filter is used in front of the regulator. This action can lead to instability, as well as some of the effects mentioned above, unless designed carefully. The AN-2162 Simple Success With Conducted EMI From DC/DC Converters application note provides helpful suggestions when designing an input filter for any switching regulator. In some cases, a transient voltage suppressor (TVS) is used on the input of regulators. One class of this device has a snap-back characteristic (thyristor type). TI does not recommend the use of a device with this type of characteristic. When the TVS fires, the clamping voltage falls to a very low value. If this voltage is less than the output voltage of the regulator, the output capacitors discharge through the device back to the input. This uncontrolled current flow can damage the device.

7.4 Layout

7.4.1 Layout Guidelines

The circuit in Figure 7-3 serves as both a block diagram of the LM5576 and a typical application board schematic for the LM5576. In a buck regulator, there are two loops where currents are switched very fast. The first loop starts from the input capacitors, to the regulator VIN pin, to the regulator SW pin, to the inductor, and then out to the load. The second loop starts from the output capacitor ground, to the regulator PGND pins, to the regulator IS pins, to the diode anode, to the inductor, and then out to the load. Minimize the loop area of these two loops to reduce the stray inductance and minimizes noise and possible erratic operation. A ground plane in the printed-circuit board (PCB) is recommended as a means to connect the input filter capacitors to the output filter capacitors and the PGND pins of the regulator. Connect all of the low power ground connections (C_{SS}, R_T, C_{RAMP}) directly to the regulator AGND pin. Connect the AGND and PGND pins together through the topside copper area covering the entire underside of the device. Place several vias in this underside copper area to the ground plane.

The two highest power dissipating components are the re-circulating diode and the LM5576 regulator IC. The easiest method to determine the power dissipated within the LM5576 is to measure the total conversion losses ($P_{IN} – P_{OUT}$) then subtract the power losses in the Schottky diode, output inductor and snubber resistor. Use Equation 20 to calculate an approximation for the Schottky diode loss.

$$P = (1 – D) \times I_{OUT} \times V_{FWD} \quad (20)$$

Use Equation 21 to calculate an approximation for the output inductor power.

$$P = I_{OUT}{}^2 \times R \times 1.1 \quad (21)$$

Copyright © 2025 Texas Instruments Incorporated

where

- R is the DC resistance of the inductor
- and the 1.1 factor is an approximation for the AC losses.

If a snubber is used, use Equation 22 to calculate an approximation for the damping resistor power dissipation.

$$P = V_{IN}^{2} \times Fsw \times Csnub \quad (22)$$

where

- Fsw is the switching frequency
- and Csnub is the snubber capacitor.

The regulator has an exposed thermal pad to help power dissipation. Add several vias under the device to the ground plane to greatly reduce the regulator junction temperature. Select a diode with an exposed pad to help the power dissipation of the diode.

7.4.2 Layout Example

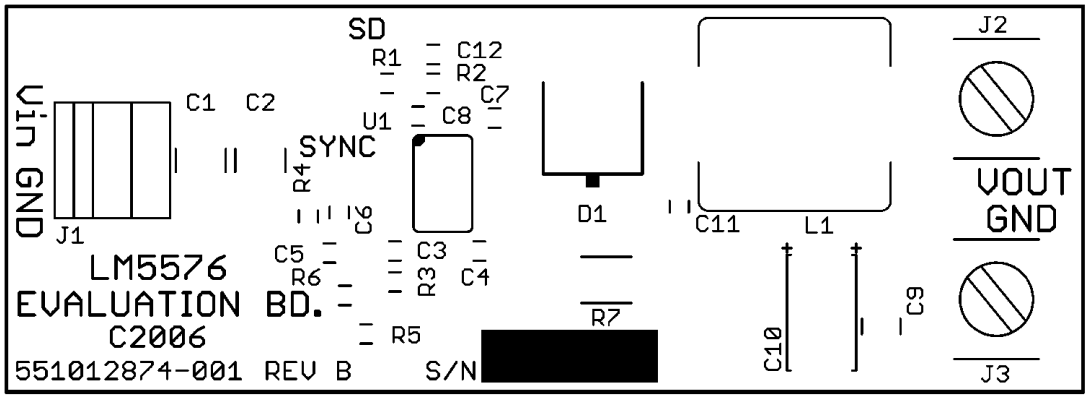

Figure 7-13. Silkscreen

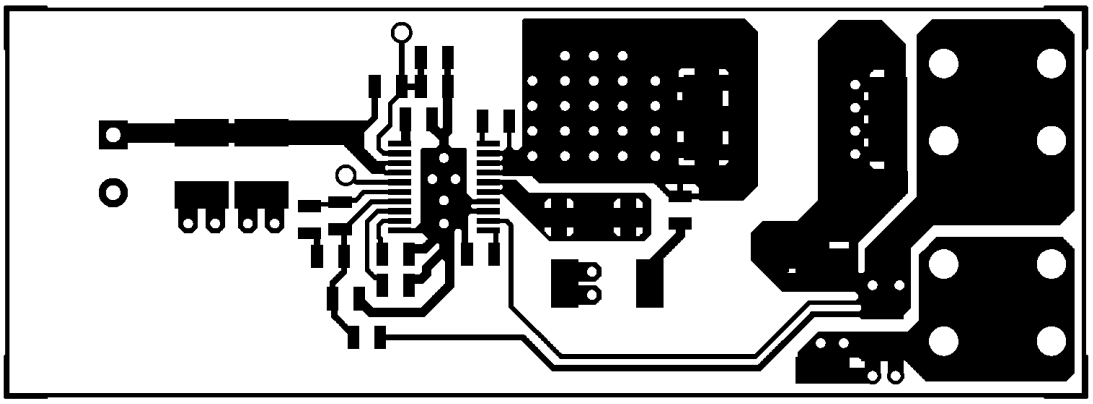

Figure 7-14. Component Side

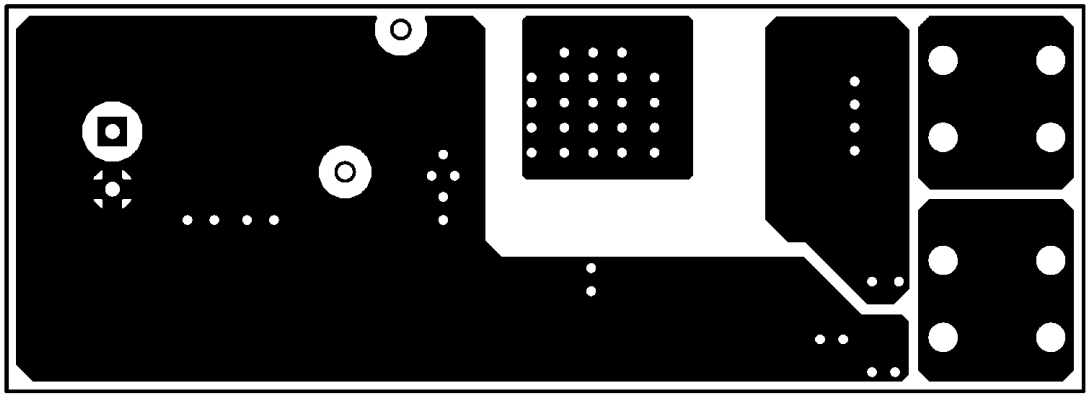

Figure 7-15. Solder Side

7.4.3 Power Dissipation

The most significant variables that affect the power dissipated by the LM5576 are the output current, input voltage, and operating frequency. The power dissipated while operating near the maximum output current and maximum input voltage can be appreciable. The operating frequency of the LM5576 evaluation board has been designed for 300 kHz. When operating at 3-A output current with a 70-V input the power dissipation of the LM5576 regulator is approximately 2.5 W.

7.4.4 Thermal Considerations

The junction-to-ambient thermal resistance of the LM5576 varies with the application. The most significant variables are the area of copper in the PCB, the number of vias under the IC exposed pad and the amount of forced air cooling provided. Referring to the evaluation board artwork, the area under the LM5576 (component side) is covered with copper and there are five connection vias to the solder side ground plane. Additional vias under the IC have diminishing value as more vias are added. The integrity of the solder connection from the IC exposed pad to the PCB is critical. Excessive voids will greatly diminish the thermal dissipation capacity. The junction-to-ambient thermal resistance of the LM5576 mounted in the evaluation board varies from 45°C/W with no airflow to 25°C/W with 900 LFM (Linear Feet per Minute). With a 25°C ambient temperature and no airflow, the predicted junction temperature for the LM5576 will be 25 + (45 × 2.5) = 137.5°C. If the evaluation board is operated at 3-A output current and 70-V input voltage for a prolonged period of time, the thermal shutdown protection within the IC will activate. The IC turns off, allowing the junction to cool, followed by restart with the soft-start capacitor reset to zero.

One or more of the following modifications prevent the thermal shutdown from being activated: apply forced air cooling, reduce the maximum input voltage, lower the maximum output current, reduce the operating frequency, add more heat sinking to the PCB. For example, applying forced air cooling of 225 LFM reduces the LM5576 thermal resistance to approximately 30°C/W. The junction temperature reduces to 25 + (2.5 × 30) = 100°C. If the maximum input voltage for the application is 48 V, then the IC power dissipation reduces to 2 W (at 3-A output current). With the same forced air cooling, the junction temperature reduces to 25 + (2 × 30) = 85°C.

Copyright © 2025 Texas Instruments Incorporated

8 Device and Documentation Support

8.1 Device Support

8.1.1 Development Support

8.1.1.1 Custom Design With WEBENCH® Tools

Click here to create a custom design using the LM5576 device with the WEBENCH® Power Designer.

1. Start by entering the input voltage (V_{IN}), output voltage (V_{OUT}), and output current (I_{OUT}) requirements.
2. Optimize the design for key parameters such as efficiency, footprint, and cost using the optimizer dial.
3. Compare the generated design with other possible solutions from Texas Instruments.

The WEBENCH Power Designer provides a customized schematic along with a list of materials with real-time pricing and component availability.

In most cases, these actions are available:

- Run electrical simulations to see important waveforms and circuit performance
- Run thermal simulations to understand board thermal performance
- Export customized schematic and layout into popular CAD formats
- Print PDF reports for the design, and share the design with colleagues

Get more information about WEBENCH tools at www.ti.com/WEBENCH.

8.2 Receiving Notification of Documentation Updates

To receive notification of documentation updates, navigate to the device product folder on ti.com. Click on *Notifications* to register and receive a weekly digest of any product information that has changed. For change details, review the revision history included in any revised document.

8.3 Support Resources

TI E2E™ support forums are an engineer's go-to source for fast, verified answers and design help — straight from the experts. Search existing answers or ask your own question to get the quick design help you need.

Linked content is provided "AS IS" by the respective contributors. They do not constitute TI specifications and do not necessarily reflect TI's views; see TI's Terms of Use.

8.4 Trademarks

TI E2E™ is a trademark of Texas Instruments.
WEBENCH® is a registered trademark of Texas Instruments.
All trademarks are the property of their respective owners.

8.5 Electrostatic Discharge Caution



This integrated circuit can be damaged by ESD. Texas Instruments recommends that all integrated circuits be handled with appropriate precautions. Failure to observe proper handling and installation procedures can cause damage.

ESD damage can range from subtle performance degradation to complete device failure. Precision integrated circuits may be more susceptible to damage because very small parametric changes could cause the device not to meet its published specifications.

8.6 Glossary

TI Glossary	This glossary lists and explains terms, acronyms, and definitions.

Copyright © 2025 Texas Instruments Incorporated

9 Revision History

NOTE: Page numbers for previous revisions may differ from page numbers in the current version.

Changes from Revision J (October 2014) to Revision K (November 2025)	Page
• Deleted SIMPLE SWITCHER® branding from the data sheet	1
• Moved the automotive device to a standalone data sheet (SNOSB24)	1
• Added WEBENCH links throughout the document	1
• Updated the numbering format for tables, figures, and cross-references throughout the document	1
• Changed all instances of legacy terminology to controller and peripheral	1
• Updated Figure 4-1	3
• Moved the storage temperature information to the *Absolute Maximum Ratings* table	5
• Updated table note to the latest standards	5
• Added Charged-device model (CDM) spec to the *ESD Ratings* table	5
• Added the latest information to the *Thermal Information* table	5
• Changed Bias Current (Iin) from 3.4mA to 2mA	6
• Changed Shutdown Current (Iin) from 57uA to 48uA	6
• Changed BOOST UVLO Hysteresis from 0.56V to 0.8V	6
• Changed FB Bias Current from 17nA to 10nA	6
• Updated the *Power Supply Recommendations* section	26
• Added the *Power Dissipation* section	28
• Added the *Thermal Considerations* section	28

Changes from Revision I (April 2013) to Revision J (October 2014)	Page
• Added *Pin Configuration and Functions* section, *Handling Rating* table, *Feature Description* section, *Device Functional Modes*, *Application and Implementation* section, *Power Supply Recommendations* section, *Layout* section, *Device and Documentation Support* section, and *Mechanical, Packaging, and Orderable Information* section	1

10 Mechanical, Packaging, and Orderable Information

The following pages include mechanical, packaging, and orderable information. This information is the most current data available for the designated devices. This data is subject to change without notice and revision of this document. For browser-based versions of this data sheet, refer to the left-hand navigation.

Copyright © 2025 Texas Instruments Incorporated

PACKAGING INFORMATION

Orderable part number	Status (1)	Material type (2)	Package | Pins	Package qty | Carrier	RoHS (3)	Lead finish/ Ball material (4)	MSL rating/ Peak reflow (5)	Op temp (°C)	Part marking (6)
LM5576MH/NOPB	Active	Production	HTSSOP (PWP) | 20	73 | TUBE	Yes	SN	Level-1-260C-UNLIM	-40 to 125	LM5576 MH
LM5576MH/NOPB.A	Active	Production	HTSSOP (PWP) | 20	73 | TUBE	Yes	SN	Level-1-260C-UNLIM	-40 to 125	LM5576 MH
LM5576MH/NOPB.B	Active	Production	HTSSOP (PWP) | 20	73 | TUBE	Yes	SN	Level-1-260C-UNLIM	-40 to 125	LM5576 MH
LM5576MHX/NOPB	Active	Production	HTSSOP (PWP) | 20	2500 | LARGE T&R	Yes	Call TI | Sn	Level-1-260C-UNLIM	-40 to 125	LM5576 MH
LM5576MHX/NOPB.A	Active	Production	HTSSOP (PWP) | 20	2500 | LARGE T&R	Yes	Call TI	Level-1-260C-UNLIM	-40 to 125	LM5576 MH
LM5576MHX/NOPB.B	Active	Production	HTSSOP (PWP) | 20	2500 | LARGE T&R	Yes	Call TI	Level-1-260C-UNLIM	-40 to 125	LM5576 MH

(1) **Status:** For more details on status, see our product life cycle.

(2) **Material type:** When designated, preproduction parts are prototypes/experimental devices, and are not yet approved or released for full production. Testing and final process, including without limitation quality assurance, reliability performance testing, and/or process qualification, may not yet be complete, and this item is subject to further changes or possible discontinuation. If available for ordering, purchases will be subject to an additional waiver at checkout, and are intended for early internal evaluation purposes only. These items are sold without warranties of any kind.

(3) **RoHS values:** Yes, No, RoHS Exempt. See the TI RoHS Statement for additional information and value definition.

(4) **Lead finish/Ball material:** Parts may have multiple material finish options. Finish options are separated by a vertical ruled line. Lead finish/Ball material values may wrap to two lines if the finish value exceeds the maximum column width.

(5) **MSL rating/Peak reflow:** The moisture sensitivity level ratings and peak solder (reflow) temperatures. In the event that a part has multiple moisture sensitivity ratings, only the lowest level per JEDEC standards is shown. Refer to the shipping label for the actual reflow temperature that will be used to mount the part to the printed circuit board.

(6) **Part marking:** There may be an additional marking, which relates to the logo, the lot trace code information, or the environmental category of the part.

Multiple part markings will be inside parentheses. Only one part marking contained in parentheses and separated by a "~" will appear on a part. If a line is indented then it is a continuation of the previous line and the two combined represent the entire part marking for that device.

Important Information and Disclaimer: The information provided on this page represents TI's knowledge and belief as of the date that it is provided. TI bases its knowledge and belief on information provided by third parties, and makes no representation or warranty as to the accuracy of such information. Efforts are underway to better integrate information from third parties. TI has taken and continues to take reasonable steps to provide representative and accurate information but may not have conducted destructive testing or chemical analysis on incoming materials and chemicals. TI and TI suppliers consider certain information to be proprietary, and thus CAS numbers and other limited information may not be available for release.

In no event shall TI's liability arising out of such information exceed the total purchase price of the TI part(s) at issue in this document sold by TI to Customer on an annual basis.

OTHER QUALIFIED VERSIONS OF LM5576 :

- Automotive : LM5576-Q1

NOTE: Qualified Version Definitions:

- Automotive - Q100 devices qualified for high-reliability automotive applications targeting zero defects

TAPE AND REEL INFORMATION

REEL DIMENSIONS

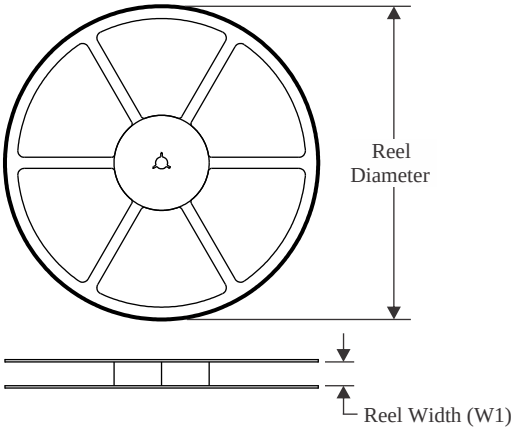

TAPE DIMENSIONS

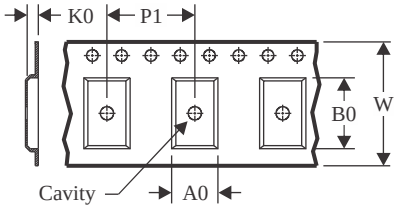

A0	Dimension designed to accommodate the component width
B0	Dimension designed to accommodate the component length
K0	Dimension designed to accommodate the component thickness
W	Overall width of the carrier tape
P1	Pitch between successive cavity centers

QUADRANT ASSIGNMENTS FOR PIN 1 ORIENTATION IN TAPE

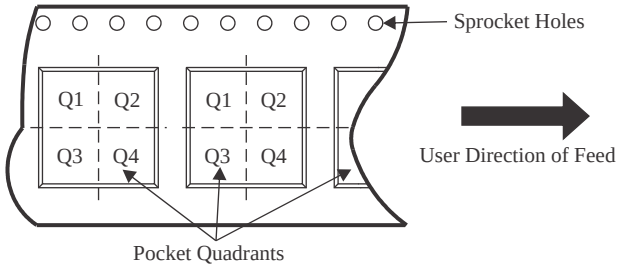

*All dimensions are nominal

Device	Package Type	Package Drawing	Pins	SPQ	Reel Diameter (mm)	Reel Width W1 (mm)	A0 (mm)	B0 (mm)	K0 (mm)	P1 (mm)	W (mm)	Pin1 Quadrant
LM5576MHX/NOPB	HTSSOP	PWP	20	2500	330.0	16.4	6.95	7.0	1.4	8.0	16.0	Q1

TAPE AND REEL BOX DIMENSIONS

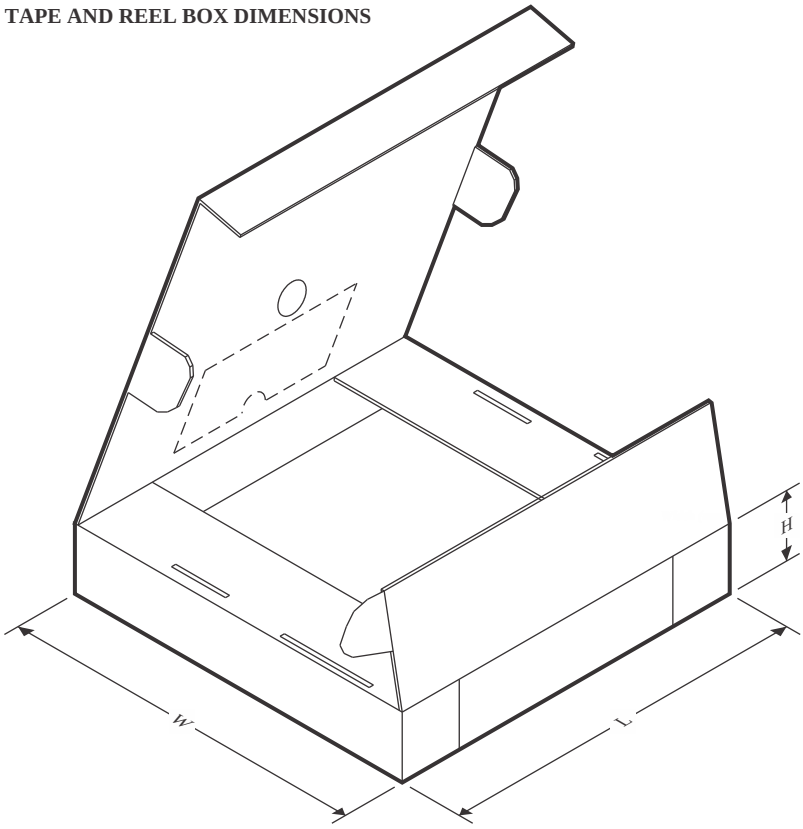

*All dimensions are nominal

Device	Package Type	Package Drawing	Pins	SPQ	Length (mm)	Width (mm)	Height (mm)
LM5576MHX/NOPB	HTSSOP	PWP	20	2500	356.0	356.0	35.0

TUBE

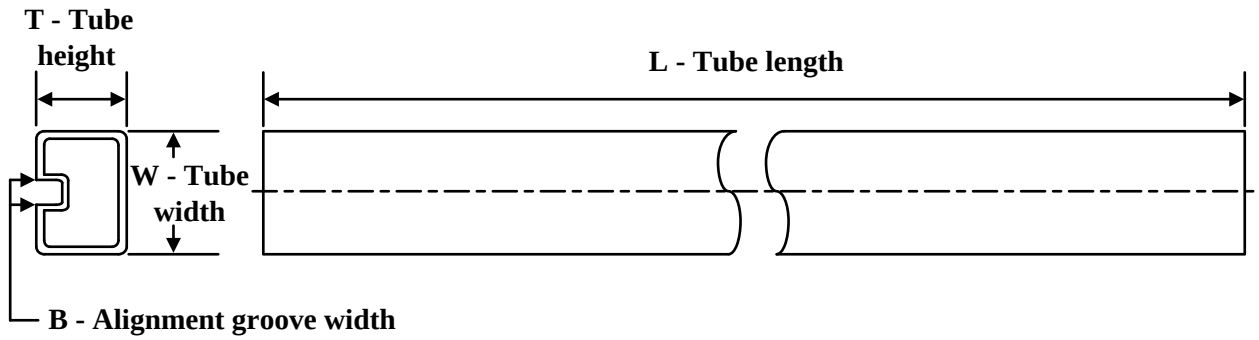

*All dimensions are nominal

Device	Package Name	Package Type	Pins	SPQ	L (mm)	W (mm)	T (µm)	B (mm)
LM5576MH/NOPB	PWP	HTSSOP	20	73	495	8	2514.6	4.06
LM5576MH/NOPB.A	PWP	HTSSOP	20	73	495	8	2514.6	4.06
LM5576MH/NOPB.B	PWP	HTSSOP	20	73	495	8	2514.6	4.06

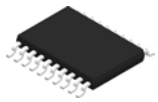

PACKAGE OUTLINE

PWP0020A

PowerPAD™ TSSOP - 1.1 mm max height

PLASTIC SMALL OUTLINE

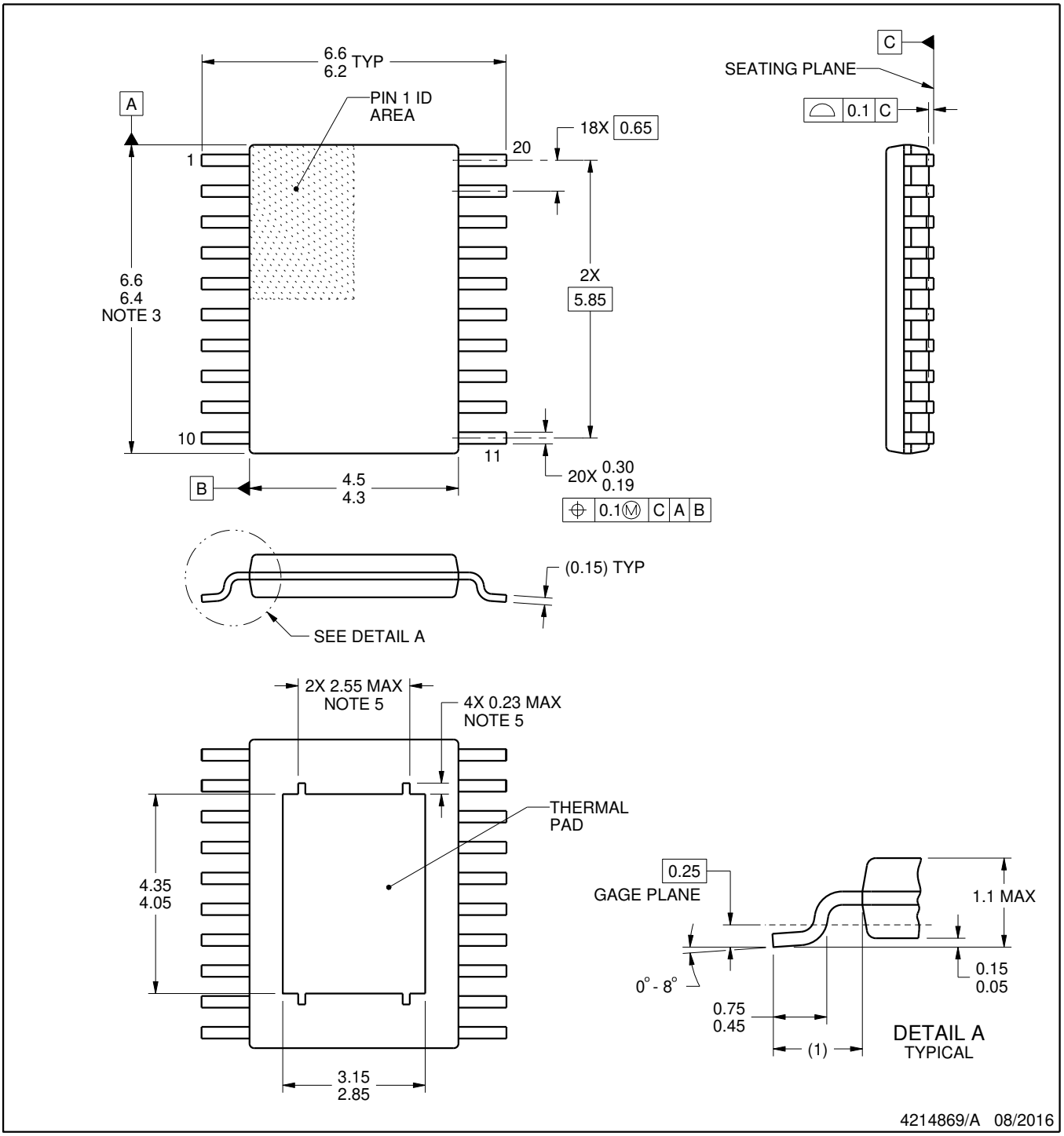

PowerPAD is a trademark of Texas Instruments.

NOTES:

1. All linear dimensions are in millimeters. Any dimensions in parenthesis are for reference only. Dimensioning and tolerancing per ASME Y14.5M.
2. This drawing is subject to change without notice.
3. This dimension does not include mold flash, protrusions, or gate burrs. Mold flash, protrusions, or gate burrs shall not exceed 0.15 mm per side.
4. Reference JEDEC registration MO-153.
5. Features may differ or may not be present.

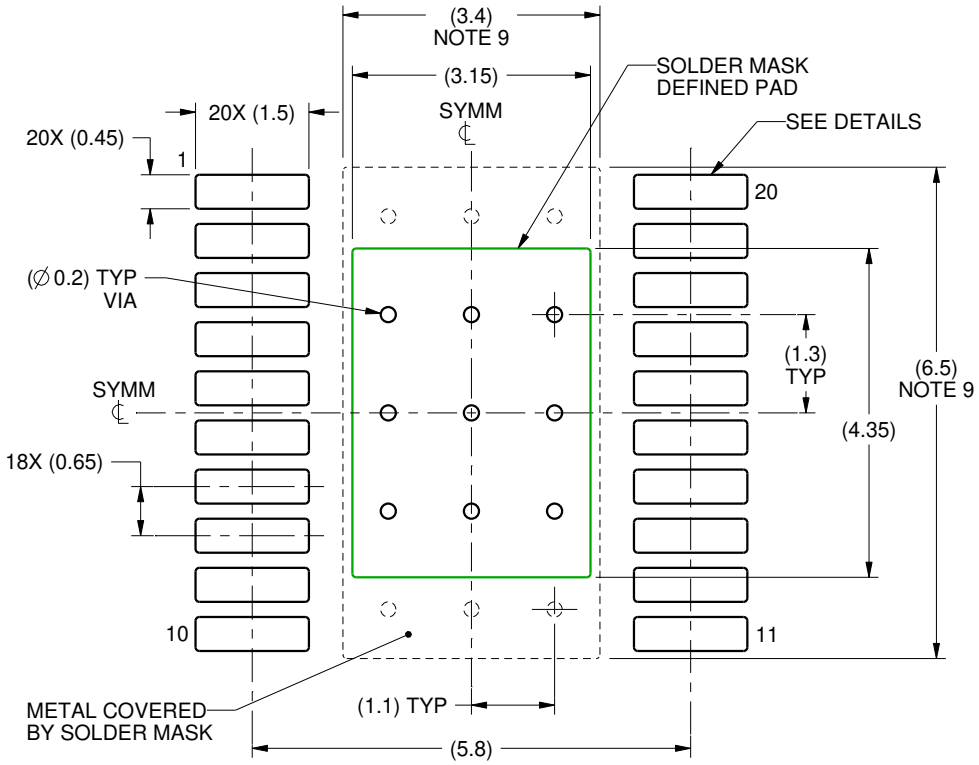

LAND PATTERN EXAMPLE
SCALE:10X

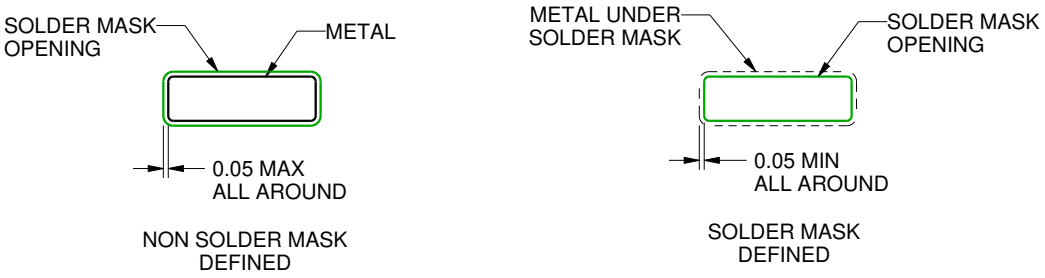

SOLDER MASK DETAILS
PADS 1-20

4214869/A 08/2016

NOTES: (continued)

6. Publication IPC-7351 may have alternate designs.
7. Solder mask tolerances between and around signal pads can vary based on board fabrication site.
8. This package is designed to be soldered to a thermal pad on the board. For more information, see Texas Instruments literature numbers SLMA002 (www.ti.com/lit/slma002) and SLMA004 (www.ti.com/lit/slma004).
9. Size of metal pad may vary due to creepage requirement.

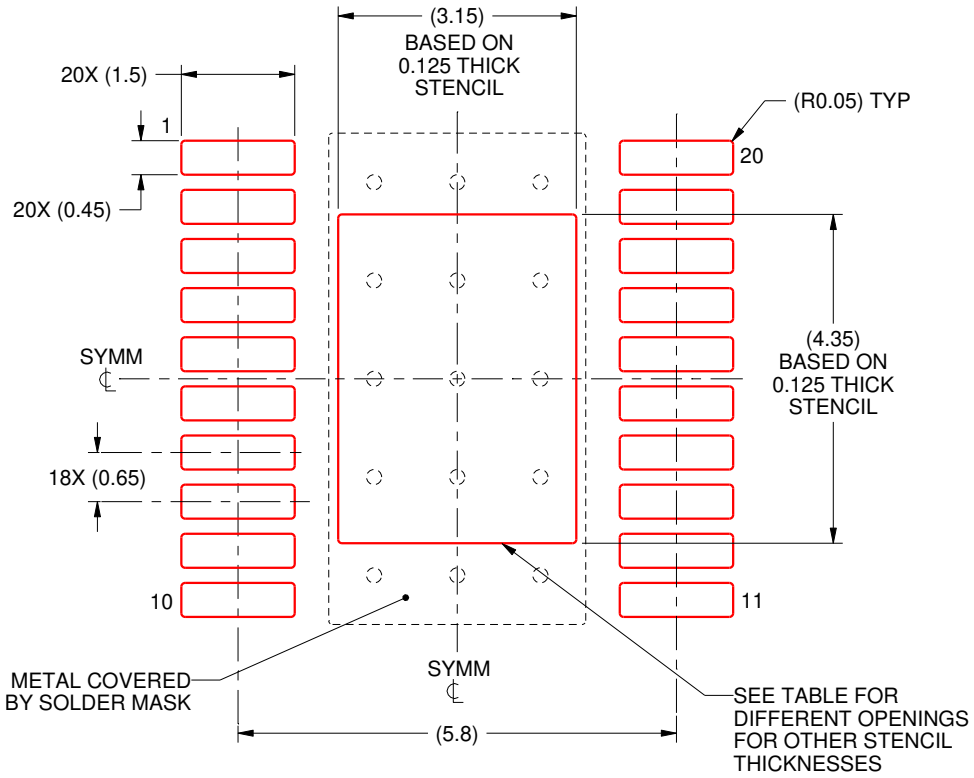

SOLDER PASTE EXAMPLE
EXPOSED PAD
100% PRINTED SOLDER COVERAGE BY AREA
SCALE:10X

STENCIL THICKNESS	SOLDER STENCIL OPENING
0.1	3.52 X 4.86
0.125	3.15 X 4.35 (SHOWN)
0.15	2.88 X 3.97
0.175	2.66 X 3.68

4214869/A 08/2016

NOTES: (continued)

10. Laser cutting apertures with trapezoidal walls and rounded corners may offer better paste release. IPC-7525 may have alternate design recommendations.
11. Board assembly site may have different recommendations for stencil design.

IMPORTANT NOTICE AND DISCLAIMER

TI PROVIDES TECHNICAL AND RELIABILITY DATA (INCLUDING DATASHEETS), DESIGN RESOURCES (INCLUDING REFERENCE DESIGNS), APPLICATION OR OTHER DESIGN ADVICE, WEB TOOLS, SAFETY INFORMATION, AND OTHER RESOURCES “AS IS” AND WITH ALL FAULTS, AND DISCLAIMS ALL WARRANTIES, EXPRESS AND IMPLIED, INCLUDING WITHOUT LIMITATION ANY IMPLIED WARRANTIES OF MERCHANTABILITY, FITNESS FOR A PARTICULAR PURPOSE OR NON-INFRINGEMENT OF THIRD PARTY INTELLECTUAL PROPERTY RIGHTS.

These resources are intended for skilled developers designing with TI products. You are solely responsible for (1) selecting the appropriate TI products for your application, (2) designing, validating and testing your application, and (3) ensuring your application meets applicable standards, and any other safety, security, regulatory or other requirements.

These resources are subject to change without notice. TI grants you permission to use these resources only for development of an application that uses the TI products described in the resource. Other reproduction and display of these resources is prohibited. No license is granted to any other TI intellectual property right or to any third party intellectual property right. TI disclaims responsibility for, and you fully indemnify TI and its representatives against any claims, damages, costs, losses, and liabilities arising out of your use of these resources.

TI’s products are provided subject to TI’s Terms of Sale, TI’s General Quality Guidelines, or other applicable terms available either on ti.com or provided in conjunction with such TI products. TI’s provision of these resources does not expand or otherwise alter TI’s applicable warranties or warranty disclaimers for TI products. Unless TI explicitly designates a product as custom or customer-specified, TI products are standard, catalog, general purpose devices.

TI objects to and rejects any additional or different terms you may propose.

Copyright © 2026, Texas Instruments Incorporated

Last updated 10/2025