LM93 Hardware Monitor with Integrated Fan Control for Server Management

Check for Samples: LM93

1 Introduction

1.1 Features

- **8-bit ΣΔ ADC**
- **Monitors 16 Power Supplies**
- **Monitors 2 Remote Thermal Diodes**
- **Internal Ambient Temperature Sensing**
- **Programmable Autonomous Fan Control Based on Temperature Readings with Fan Boost Support**
- **Fan Control Based on 13-step Lookup Table**
- **Temperature Reading Digital Filter**
- **1.0°C Digital Temperature Sensor Resolution**
- **0.5°C Temperature Resolution for Fan Control**
- **2 PWM Fan Speed Control Outputs**
- **4 Fan Tachometer Inputs**
- **Dual Processor Thermal Throttling ($\overline{\text{PROCHOT}}$) Monitoring**
- **Dual Dynamic VID Monitoring (6 VIDs per Processor)**
- **8 General Purpose I/Os:**
  - **4 Can be Configured as Fan Tachometer Inputs**
  - **2 Can be Configured to Connect to $\overline{\text{THERMTRIP}}$ from a Processor**
  - **2 are Standard GPIOs that Could be Used to Monitor $\overline{\text{IERR}}$ Signal**
- **2 General Purpose Inputs that Can be Used to Monitor SCSI Termination Signals**
- **Limit Register Comparisons of All Monitored Values**
- **2-wire, SMBus 2.0 Compliant, Serial Digital Interface**
  - **Supports Byte/block Read and Write**
  - **Configurable Slave Address (Tri-level Pin Selects 1 of 3 Possible Addresses)**
- **2.5V Reference Voltage Output**
- **56-pin TSSOP Package**
- **XOR-tree Test Mode**
- **Key Specifications**
  - **Voltage Measurement Accuracy ±2% FS (max)**
  - **Resolution 8-bits, 1°C**
  - **Temperature Sensor Accuracy ±3°C (max)**
  - **Temperature Range:**
    - **LM93 Operational 0°C to +85°C**
    - **Remote Temp Accuracy 0°C to +125°C**
  - **Power Supply Voltage +3.0V to +3.6V**
  - **Power Supply Current 0.9 mA**

1.2 Applications

- **Servers**
- **Workstations**
- **Multi-Microprocessor Based Equipment**

1.3 Description

The LM93, hardware monitor, has a two wire digital interface compatible with SMBus 2.0. Using an 8-bit ΣΔ ADC, the LM93 measures the temperature of two remote diode connected transistors as well as its own die and 16 power supply voltages.

To set fan speed, the LM93 has two PWM outputs that are each controlled by up to four temperature zones. The fan-control algorithm is lookup table based. The LM93 includes a digital filter that can be invoked to smooth temperature readings for better control of fan speed. The LM93 has four tachometer inputs to measure fan speed. Limit and status registers for all measured values are included.

Please be aware that an important notice concerning availability, standard warranty, and use in critical applications of Texas Instruments semiconductor products and disclaimers thereto appears at the end of this data sheet.

All trademarks are the property of their respective owners.

PRODUCTION DATA information is current as of publication date. Products conform to specifications per the terms of the Texas Instruments standard warranty. Production processing does not necessarily include testing of all parameters.

Copyright © 2003–2013, Texas Instruments Incorporated

The LM93 builds upon the functionality of previous motherboard management ASICs and uses some of the LM85's features (i.e. smart tachometer mode). It also adds measurement and control support for dynamic Vccp monitoring and $\overline{\text{PROCHOT}}$. It is designed to monitor a dual processor Xeon class motherboard with a minimum of external components.

These devices have limited built-in ESD protection. The leads should be shorted together or the device placed in conductive foam during storage or handling to prevent electrostatic damage to the MOS gates.

1 Introduction **1**
1.1 Features 1
1.2 Applications 1
1.3 Description 1
2 Device Information **3**
2.1 Block Diagram 3
2.2 Application 3
2.3 Connection Diagram 4
2.4 Recommended Implementation 8
3 Functional Description **9**
3.1 MONITORING CYCLE TIME 9
3.2 ΣΔ A/D INHERENT AVERAGING 9
3.3 TEMPERATURE MONITORING 9
3.4 VOLTAGE MONITORING 10
3.5 RECOMMENDED EXTERNAL SCALING RESISTORS FOR +12V POWER RAILS 12
3.6 RECOMMENDED EXTERNAL SCALING CIRCUIT FOR −12V POWER INPUT 12
3.7 DYNAMIC Vccp MONITORING USING VID 15
3.8 V_{REF} OUTPUT 15
3.9 $\overline{\text{PROCHOT}}$ BACKGROUND INFORMATION 16
3.10 $\overline{\text{PROCHOT}}$ MONITORING 16
3.11 $\overline{\text{PROCHOT}}$ OUTPUT CONTROL 17
3.12 FAN SPEED MEASUREMENT 18
3.13 SMART FAN SPEED MEASUREMENT 18
3.14 Inputs/Outputs 18
3.15 SMBus Interface 20
3.16 Using The LM93 30
3.17 Registers 42
4 Electrical Specifications **81**
4.1 Absolute Maximum Ratings 81
4.2 Operating Ratings 82
4.3 DC Electrical Characteristics 82
4.4 AC Electrical Characteristics 84
Data Sheet Revision History **87**

Copyright © 2003–2013, Texas Instruments Incorporated

2 Device Information

2.1 Block Diagram

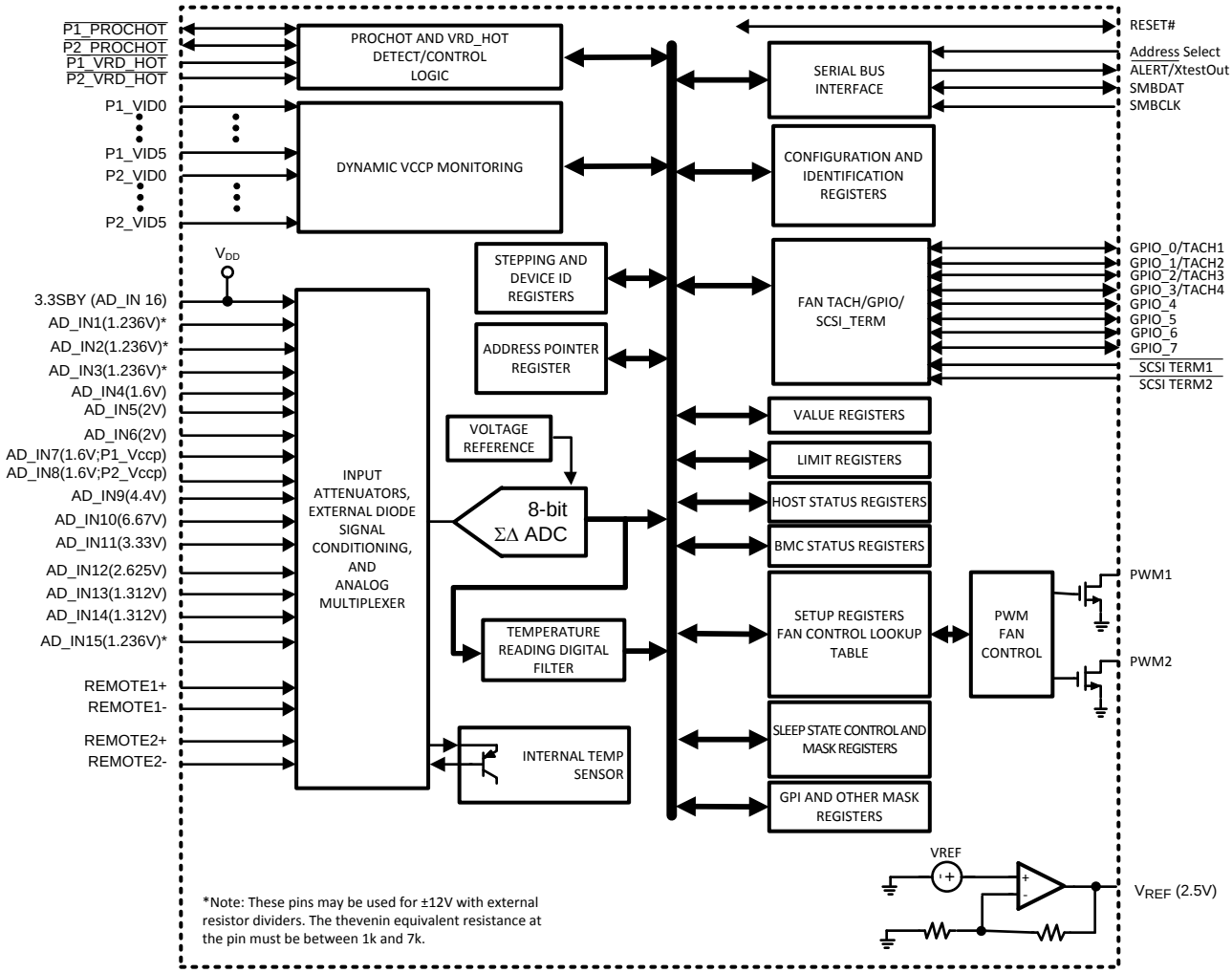

2.2 Application

Baseboard management of a Dual processor server. Two LM93s may be required to manage a quad processor baseboard. The block diagram of LM93 hardware is illustrated below. The hardware implementation is a single chip ASIC solution.

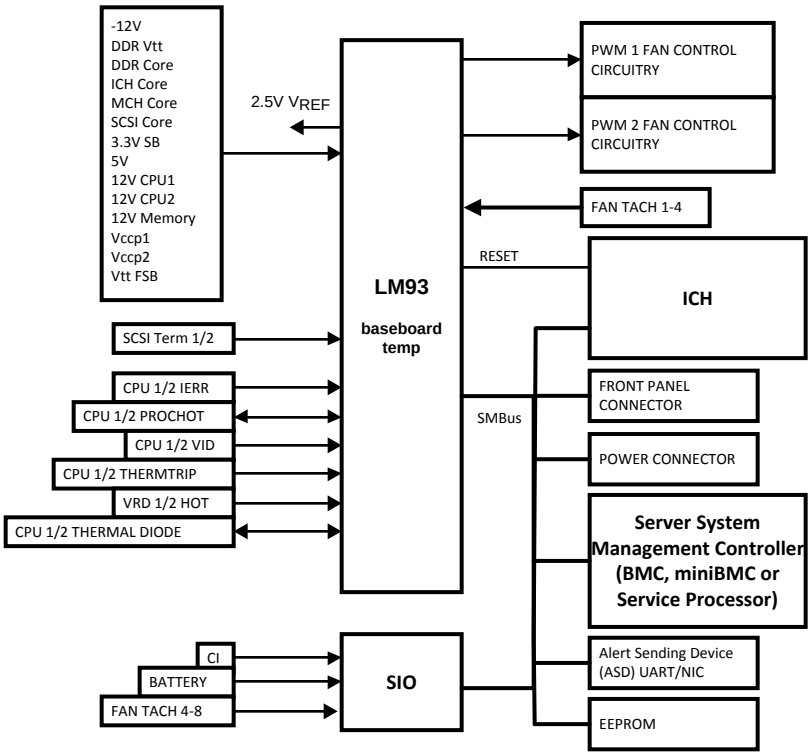

Figure 2-1. 2 Way Xeon Server Management

2.3 Connection Diagram

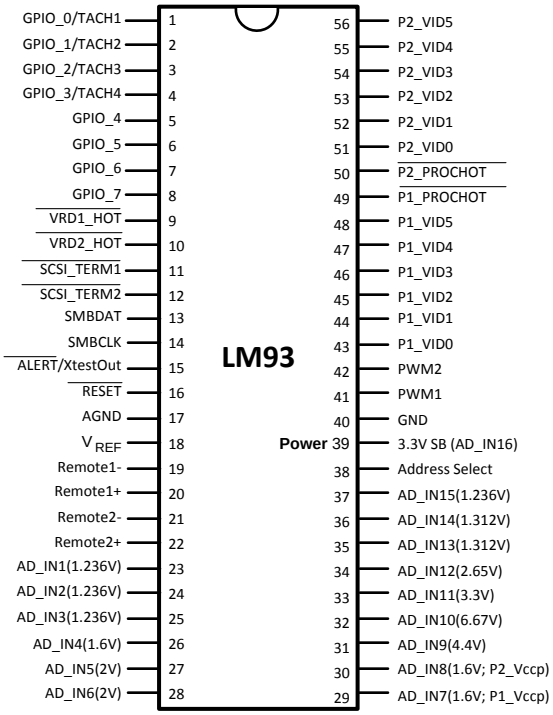

Figure 2-2. 56 Pin TSSOP Package DGG0056A Top View

Copyright © 2003–2013, Texas Instruments Incorporated

Table 2-1. Pin Descriptions[(1)]

Symbol	Pin #	Type	Function
GPIO_0/TACH1	1	Digital I/O (Open-Drain)	Can be configured as fan tach input or a general purpose open-drain digital I/O.
GPIO_1/TACH2	2	Digital I/O (Open-Drain)	Can be configured as fan tach input or a general purpose open-drain digital I/O.
GPIO_2/TACH3	3	Digital I/O (Open-Drain)	Can be configured as fan tach input or a general purpose open-drain digital I/O.
GPIO_3/TACH4	4	Digital I/O (Open-Drain)	Can be configured as fan tach input or a general purpose open-drain digital I/O..
GPIO_4 / P1_THERMTRIP	5	Digital I/O (Open-Drain)	A general purpose open-drain digital I/O. Can be configured to monitor a CPU's THERMTRIP signal to mask other errors.
GPIO_5 / P2_THERMTRIP	6	Digital I/O (Open-Drain)	A general purpose open-drain digital I/O. Can be configured to monitor a CPU's THERMTRIP signal to mask other errors.
GPIO_6	7	Digital I/O (Open-Drain)	Can be used to detect the state of CPU1 IERR or a general purpose open-drain digital I/O
GPIO_7	8	Digital I/O (Open-Drain)	Can be used to detect the state of CPU2 IERR or a general purpose open-drain digital I/O
VRD1_HOT	9	Digital Input	CPU1 voltage regulator HOT
VRD2_HOT	10	Digital Input	CPU2 voltage regulator HOT
SCSI_TERM1	11	Digital Input	SCSI Channel 1 termination fuse. Could also be used as a general purpose input to trigger an error event.
SCSI_TERM2	12	Digital Input	SCSI Channel 2 termination fuse. Could also be used as a general purpose input to trigger an error event.
SMBDAT	13	Digital I/O (Open-Drain)	Bidirectional System Management Bus Data. Output configured as 5V tolerant open-drain. SMBus 2.0 compliant.
SMBCLK	14	Digital Input	System Management Bus Clock. Driven by an open-drain output, and is 5V tolerant. SMBus 2.0 Compliant.
ALERT/XtestOut	15	Digital Output (Open-Drain)	Open-drain ALERT output used in an interrupt driven system to signal that an error event has occurred. Masked error events do not activate the ALERT output. When in XOR tree test mode, functions as XOR Tree output.
RESET	16	Digital I/O (Open-Drain)	Open-drain reset output when power is first applied to the LM93. Used as a reset for devices powered by 3.3V stand-by. After reset, this pin becomes a reset input. See RESET INPUT/OUTPUT for more information.
AGND	17	GROUND Input	Analog Ground
V_{REF}	18	Analog Output	2.5V used for external ADC reference, or as a V_{REF} reference voltage
REMOTE1−	19	Remote Thermal Diode_1- Input (CPU 1 THERMDC)	This is the negative input (current sink) from the CPU1 thermal diode. Connected to THERMDC pin of Pentium processor or the emitter of a diode connected MMBT3904 NPN transistor. Serves as the negative input into the A/D for thermal diode voltage measurements. A 100 pF capacitor is optional and can be connected between REMOTE1− and REMOTE1+.
REMOTE1+	20	Remote Thermal Diode_1+ I/O (CPU1 THERMDA)	This is a positive connection to the CPU1 thermal diode. Serves as the positive input into the A/D for thermal diode voltage measurements. It also serves as a current source output that forward biases the thermal diode. Connected to THERMDA pin of Pentium processor or the base of a diode connected MMBT3904 NPN transistor. A 100 pF capacitor is optional and can be connected between REMOTE1− and REMOTE1+.
REMOTE2−	21	Remote Thermal Diode_2 - Input (CPU2 THERMDC)	This is the negative input (current sink) from the CPU2 thermal diode. Connected to THERMDC pin of Pentium processor or the emitter of a diode connected MMBT3904 NPN transistor. Serves as the negative input into the A/D for thermal diode voltage measurements. A 100 pF capacitor is optional and can be connected between REMOTE2− and REMOTE2+.
REMOTE2+	22	Remote Thermal Diode_2 + I/O (CPU2 THERMDA)	This is a positive connection to the CPU2 thermal diode. Serves as the positive input into the A/D for thermal diode voltage measurements. It also serves as a current source output that forward biases the thermal diode. Connected to THERMDA pin of Pentium processor or the base of a diode connected MMBT3904 NPN transistor. A 100 pF capacitor is optional and can be connected between REMOTE2− and REMOTE2+.
AD_IN1	23	Analog Input (+12V1)	Analog Input for +12V Rail 1 monitoring, for CPU1 voltage regulator. External attenuation resistors required such that 12V is attenuated to 0.927V.

(1) The overscore indicates the signal is active low (“Not”).

Copyright © 2003–2013, Texas Instruments Incorporated

Table 2-1. Pin Descriptions[1] (continued)

Symbol	Pin #	Type	Function
AD_IN2	24	Analog Input (+12V2)	Analog Input for +12V Rail 2 monitoring, for CPU2 voltage regulator. External attenuation resistors required such that 12V is attenuated to 0.927V.
AD_IN3	25	Analog Input (+12V3)	Analog Input for +12V Rail 3, for Memory/3GIO slots. External attenuation resistors required such that 12V is attenuated to 0.927V.
AD_IN4	26	Analog Input (FSB_Vtt)	Analog input for 1.2V monitoring
AD_IN5	27	Analog Input (3GIO / PXH / MCH_Core)	Analog input for 1.5V monitoring.
AD_IN6	28	Analog Input (ICH_Core)	Analog input for 1.5V monitoring.
AD_IN7 (P1_Vccp)	29	Analog Input (CPU1_Vccp)	Analog input for +Vccp (processor voltage) monitoring.
AD_IN8 (P2_Vccp)	30	Analog Input (CPU2_Vccp)	Analog input for +Vccp (processor voltage) monitoring.
AD_IN9	31	Analog Input (+3.3V)	Analog input for +3.3V monitoring.
AD_IN10	32	Analog Input (+5V)	Analog input for +5V monitoring silver box supply monitoring.
AD_IN11	33	Analog Input (SCSI_Core)	Analog input for +2.5V monitoring.
AD_IN12	34	Analog Input (Mem_Core)	Analog input for +1.969V monitoring.
AD_IN13	35	Analog Input (Mem_Vtt)	Analog input for +0.984V monitoring.
AD_IN14	36	Analog Input (Gbit_Core)	Analog input for +0.984V S/B monitoring.
AD_IN15	37	Analog Input (-12V)	Analog input for -12V monitoring. External resistors required to scale to positive level. Full scale reading at 1.236V.
Address Select	38	3 level analog input	This input selects the lower two bits of the LM93 SMBus slave address.
AD_IN16	39	POWER (V_{DD}) +3.3V standby power	V_{DD} power input for LM93. Generally this is connected to +3.3V standby power. The LM93 can be powered by +3.3V if monitoring in low power states is not required, but power should be applied to this input before any other pins. This pin also serves as the analog input to monitor the 3.3V stand-by (SB) voltage. It is necessary to bypass this pin with a 0.1 µF in parallel with 100 pF. A bulk capacitance of 10 µF should be in the near vicinity. The 100 pF should be closest to the power pin.
GND	40	GROUND	Digital Ground. Digital ground and analog ground need to be tied together at the chip then both taken to a low noise system ground. A voltage difference between analog and digital ground may cause erroneous results.
PWM1	41	Digital Output (Open-Drain)	Fan control output 1.
PWM2	42	Digital Output (Open-Drain)	Fan control output 2
P1_VID0	43	Digital Input	Voltage Identification signal from the processor.
P1_VID1	44	Digital Input	Voltage Identification signal from the processor.
P1_VID2	45	Digital Input	Voltage Identification signal from the processor.
P1_VID3	46	Digital Input	Voltage Identification signal from the processor.
P1_VID4	47	Digital Input	Voltage Identification signal from the processor.
P1_VID5	48	Digital Input	Voltage Identification signal from the processor.
$\overline{\text{P1_PROCHOT}}$	49	Digital I/O (Open-Drain)	Connected to CPU1 $\overline{\text{PROCHOT}}$ (processor hot) signal through a bidirectional level shifter.
$\overline{\text{P2_PROCHOT}}$	50	Digital I/O (Open-Drain)	Connected to CPU2 $\overline{\text{PROCHOT}}$ (processor hot) signal through a bi-directional level shifter.
P2_VID0	51	Digital Input	Voltage Identification signal from the processor.
P2_VID1	52	Digital Input	Voltage Identification signal from the processor.
P2_VID2	53	Digital Input	Voltage Identification signal from the processor.
P2_VID3	54	Digital Input	Voltage Identification signal from the processor.

Copyright © 2003–2013, Texas Instruments Incorporated

Table 2-1. Pin Descriptions[1] (continued)

Symbol	Pin #	Type	Function
P2_VID4	55	Digital Input	Voltage Identification signal from the processor.
P2_VID5	56	Digital Input	Voltage Identification signal from the processor.

Table 2-2. Server Terminology

A/D	Analog to Digital Converter
ACPI	Advanced Configuration and Power Interface
$\overline{\text{ALERT}}$	SMBus signal to bus master that an event occurred that has been flagged for attention.
ASF	Alert Standard Format
BMC	Baseboard Micro-Controller
BW	Bandwidth
DIMM	Dual inline memory module
DP	Dual-processor
ECC	Error checking and correcting
FRU	Field replaceable unit
FSB	Front side bus
FW	Firmware
Gb	Gigabit
GB	Gigabyte
Gbe	Gigabit Ethernet
GPIO	General purpose I/O
HW	Hardware
I^2C	Inter integrated circuit (bus)
LAN	Local area network
LVDS	Low-Voltage Differential Signaling
Mb	Megabit
MB	Megabyte
MP	Multi-processor
MTBF	Mean time between failures
MTTR	Mean time to repair
NIC	Network Interface Card (Ethernet Card)
OS	Operating system
P/S	Power Supply
PCI	PCI Local Bus
PDB	Power Distribution Board
POR	Power On Reset
PS	Power Supply
SMBCLK and SMBDAT	These signals comprise the SMBus interface (data and clock) See the SMBus Interface section for more information.
VRD	Voltage Regulator Down - regulates Vccp voltage for a CPU

Copyright © 2003–2013, Texas Instruments Incorporated

2.4 Recommended Implementation

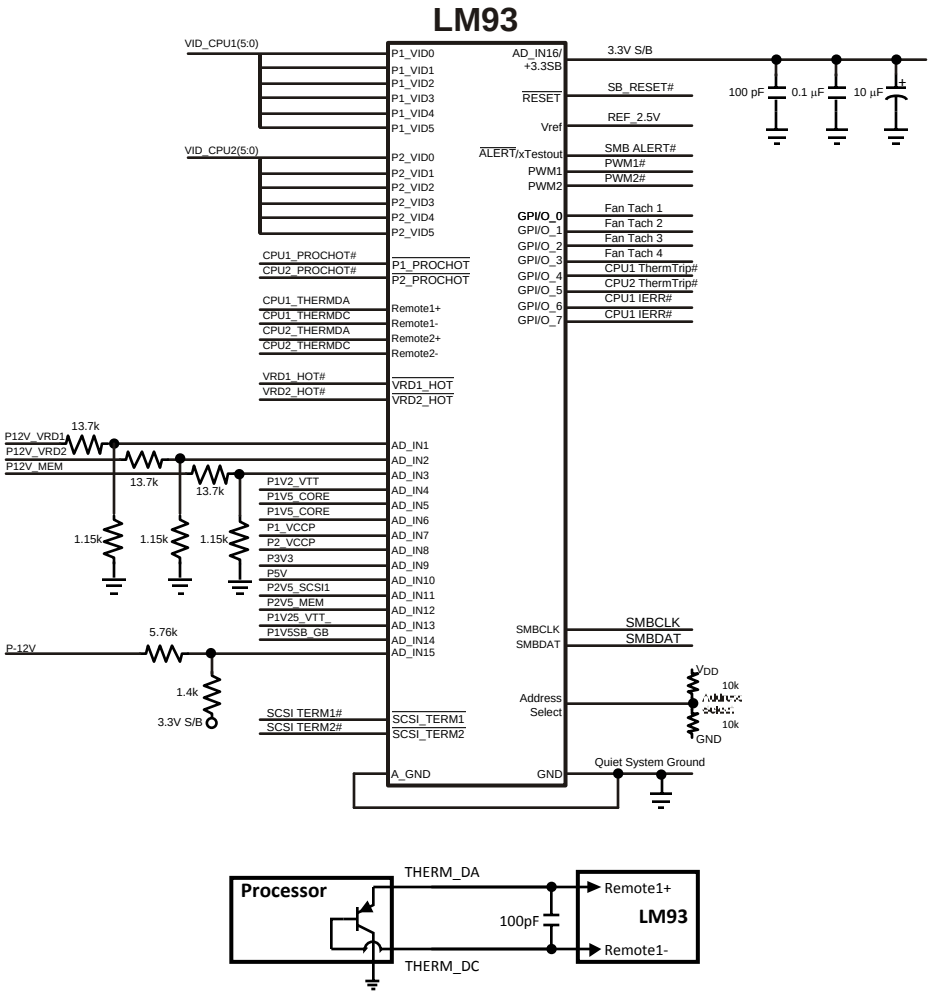

Note: 100 pF cap is optional and should be placed close to the LM93, if used. The maximum capacitance between these pins is 300 pF.

Copyright © 2003–2013, Texas Instruments Incorporated

3 Functional Description

The LM93 provides 16 channels of voltage monitoring, two remote thermal diode monitors, an onboard ambient temperature sensor, 2 $\overline{\text{PROCHOT}}$ monitors, 4 fan tachometers, 8 GPIOs, THERMTRIP monitor for masking error events, 2 SCSI_TERM inputs, and all the associated limit registers on a single chip, which communicates to the rest of the baseboard over the System Management Bus (SMBus).

Readings from both the external thermal diodes and the internal temperature sensor are made available as an 8-bit two's-complement digital byte with the LSB representing 1°C.

All but 4 of the analog inputs include internal scaling resistors. External scaling resistors are required for measuring ±12V. The inputs are converted to 8-bit digital values such that a nominal voltage appears at ¾ scale for positive voltages and ¼ scale for negative voltages. The analog inputs are intended to be connected to both baseboard resident VRDs and to standard voltage rails supplied by a SSI compliant power supply.

The LM93 provides a number of internal registers, which are detailed in the Registers section of this document.

3.1 MONITORING CYCLE TIME

When the LM93 is powered up, it cycles through each temperature measurement followed by the analog voltages in sequence, and it continuously loops through the sequence. The total monitoring cycle time is not more than 100 ms, as this is the time period that most external micro-controllers require to read the register values.

Each measured value is compared to values stored in the limit registers. When the measured value violates the programmed limit, a corresponding status bit in the B_ and H_Error Status Registers is set.

The $\overline{\text{PROCHOT}}$ and dynamic VID/Vccp monitoring is performed independently of the analog and temperature monitoring cycle.

3.2 ΣΔ A/D INHERENT AVERAGING

The ΣΔ A/D architecture filters the input signal. During one conversion many samples are taken of the input voltage and these samples are effectively averaged to give the final result. The output of the ΣΔ A/D is the average value of the signal during the sampling interval. For a voltage measurement, the samples are accumulated for 1.5 ms. For a temperature measurement, the samples are accumulated for 8.4 ms.

3.3 TEMPERATURE MONITORING

The LM93 remote diode target is the embedded thermal diode found in a Xeon class processor. In some cases instead of using the embedded thermal diode, found on the Xeon processor, a diode connected 2N3904 transistor type can also be used. An example of this would be a MMBT3904 with its collector and base tied to the thermal diode REMOTE+ pin and the emitter tied to the thermal diode REMOTE− pin. Since the MMBT3904 is a surface mount device and has very small thermal mass, it measures the board temperature where it is mounted. The non-ideality and series resistance varies for different diodes. Since the LM93 is optimized for the Xeon processor, when measuring a 2N3904 transistor an offset in the error band of approximately −4°C may be observed. This can be corrected for by programming the appropriate Zone Adjustment Offset register.

The LM93 acquires temperature data from three different sources:

2 external diodes (embedded in a processor or discrete)

1 internal diode (internal to the LM93)

In addition to these three temperatures, a fourth temperature can be externally written into the LM93 from the SMBus. This value can be used to control fans, or compared against limits, etc. The temperature value registers are located at addresses 50h–53h. The temperature sources are referred to as “zones” for convenience:

Copyright © 2003–2013, Texas Instruments Incorporated

Zone	Description
Zone 1	Processor 1 remote diode (REMOTE1+, REMOTE1−)
Zone 2	Processor 2 remote diode (REMOTE2+, REMOTE2−)
Zone 3	Internal LM93 on-chip sensor
Zone 4	External Digital Sensor written in from SMBus

3.3.1 Temperature Data Format

Most of the temperature data for the LM93 is represented in a common format. The format is an 8-bit, twos complement byte with the LSB equal to 1.0 °C. This applies to temperature measurements as well as any temperature limit registers and some configuration registers. Some fan control configuration registers use four bits and have a binary format, please see the Fan Control configuration register descriptions for further details on this 4-bit format.

Temperature (1)	Binary	Hex
+125°C	0111 1101	7Dh
+25°C	0001 1001	19h
+1.0°C	0000 0001	01h
0°C	0000 0000	00h
−1.0°C	1111 1111	FFh
−25°C	1110 0111	E7h
−55°C	1100 1001	C9h
−127°C	1000 0001	81h

(1) **Note:** A value of 80h has a special meaning in the limit registers. It means that the temperature channel is masked. In addition, temperature readings of 80h indicate thermal diode faults.

3.3.2 Thermal Diode Fault Status

The LM93 provides for indications of a fault (open or short circuit) with the remote thermal diodes. Before a remote diode conversion is updated, the status of the remote diode is checked for an open or short circuit condition. If such a fault condition occurs, a status bit is set in the status register. A short circuit is defined as the input pins being connected to each other. When an open or short circuit is detected, the corresponding temperature register is set to 80h.

3.4 VOLTAGE MONITORING

The LM93 contains inputs for monitoring voltages. Scaling is such that the correct value refers to approximately 3/4 scale or 192 decimal on all inputs except the ±12V. Input voltages are converted by an 8-bit Delta-Sigma (ΔΣ) A/D. The Delta-Sigma A/D architecture provides inherent filtering and spike smoothing of the analog input signal.

The ±12V inputs must be scaled externally. A full scale reading is achieved when 1.236V is applied to these inputs. For optimum performance the +12V should be scaled to provide a nominal ¾ full scale reading, while the −12V should be scaled to provide a nominal ¼ scale reading. The thevenin resistance at the pin should be kept between 1 kΩ and 7 kΩ.

Copyright © 2003–2013, Texas Instruments Incorporated

The −12V monitoring is particularly challenging. It is required that an external offset voltage and external resistors be used to bring the −12V rail into the positive input voltage region of the A/D input. It is suggested that the supply rail for the LM93 device be used as the offset voltage. This voltage is usually derived from the P/S 5V stand-by voltage rail via a ±1% accurate linear regulator. In this fashion we can always assume that the offset voltage is present when the −12V rail is present as the system cannot be turned on without the 3.3V stand-by voltage being present.

Table 3-1. Voltage vs Register Reading

Pin	Normal Use	Nominal Voltage(1)	Register Reading at Nominal Voltage	Maximum Voltage	Register Reading at Maximum Voltage	Minimum Voltage	Register Reading at Minimum Voltage	Absolute Maxmum Range
AD_IN1	+12V1	0.927V	C0h	1.236V	FFh	0V	00h	−0.3V to (V_{DD} + 0.05V)
AD_IN2	+12V2	0.927V	C0h	1.236V	FFh	0V	00h	−0.3V to (V_{DD} + 0.05V)
AD_IN3	+12V3	0.927V	C0h	1.236V	FFh	0V	00h	−0.3V to (V_{DD} + 0.05V)
AD_IN4	FSB_Vtt	1.20V	C0h	1.60V	FFh	0V	00h	−0.3V to +6.0V
AD_IN5	3GIO	1.5V	C0h	2V	FFh	0V	00h	−0.3V to +6.0V
AD_IN6	ICH_Core	1.5V	C0h	2V	FFh	0V	00h	−0.3V to +6.0V
AD_IN7	Vccp1	1.20V	C0h	1.60V	FFh	0V	00h	−0.3V to +6.0V
AD_IN8	Vccp2	1.20V	C0h	1.60V	FFh	0V	00h	−0.3V to +6.0V
AD_IN9	+3.3V	3.30V	C0h	4.40V	FFh	0V	00h	−0.3V to +6.0V
AD_IN10	+5V	5.0V	C0h	6.667V	FAh	0V	00h	−0.3V to +6.5V
AD_IN11	SCSI_Core	2.5V	C0h	3.333V	FFh	0V	00h	−0.3V to +6.0V
AD_IN12	Mem_Core	1.969V	C0h	2.625V	FFh	0V	00h	−0.3V to +6.0V
AD_IN13	Mem_Vtt	0.984V	C0h	1.312V	FFh	0V	00h	−0.3V to +6.0V
AD_IN14	Gbit_Core	0.984V	C0h	1.312V	FFh	0V	00h	−0.3V to +6.0V
AD_IN15	−12V	0.309V	40h	1.236V	FFh	0V	00h	−0.3V to (V_{DD} + 0.05V)
AD_IN16	+3.3V S/B	3.3V	C0h	3.6V	D1h	3.0V	AEh	−0.3V to +6.0V

(1) **Application Note:** The nominal voltages listed in this table are only typical values. Voltage rails with different nominal voltages can be monitored, but the register reading at the nominal value is no longer C0h. For example, a Mem_Core rail at 2.5V nominal could be monitored with AD_IN12, or a Mem_Vtt rail at 1.2V could be monitored with AD_IN13.

Copyright © 2003–2013, Texas Instruments Incorporated

3.5 RECOMMENDED EXTERNAL SCALING RESISTORS FOR +12V POWER RAILS

The +12V inputs require external scaling resistors. The resistors need to scale 12V down to 0.927V.

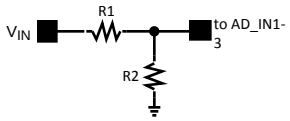

Figure 3-1. Required External Scaling Resistors for +12V Power Input

To calculate the required ratio of R1 to R2 use this equation:

$$\frac{R1}{R2} = \frac{12}{0.927} - 1 = 11.04498 \quad (1)$$

It is recommended that the equivalent thevenin resistance of the divider be between 1k and 7k to minimize errors caused by leakage currents at extreme temperatures. The best values for the resistors are: R1=13.7 kΩ and R2=1.15 kΩ. This yields a ratio of 11.94498, which has a +0.27% deviation from the theoretical. It is also recommended that the resistors have ±1% tolerance or better.

Each LSB in the voltage value registers has a weight of 12V / 192 = 62.5 mV. To calculate the actual voltage of the +12V power input, use the following equation:

$$V_{IN} = (\text{8-bit value register code}) \times (62.5\ \text{mV}) \quad (2)$$

3.6 RECOMMENDED EXTERNAL SCALING CIRCUIT FOR −12V POWER INPUT

The −12V input requires external resistors to level shift the nominal input voltage of −12V to +0.309V.

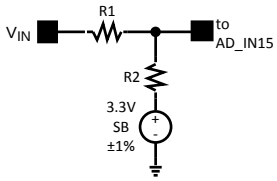

Figure 3-2. Required External Level Shifting Resistors for −12V Power Input

The +3.3V standby voltage is used as a reference for the level shifting. Therefore, the tolerance of this voltage directly effects the accuracy of the −12V reading. To minimize ratio errors, a tolerance of better than ±1% should be used. It is recommended that the equivalent thevenin resistance of the divider is between 1k and 7k to minimize errors caused by leakage currents at extreme temperatures. To calculate the ratio of R1 to R2 use this equation:

$$\frac{R1}{R2} = \frac{(V_{IN} - V_{REF})}{(AD_IN - V_{REF})} - 1 \quad (3)$$

where V_{IN} is the nominal input voltage of −12V, V_{REF} is the reference voltage of +3.3V and AD_IN is the voltage required at the AD input for a ¼ scale reading or 0.309V.

Therefore, for this case:

$$\frac{R1}{R2} = \frac{(-12 - 3.3)}{(0.309 - 3.3)} - 1 = 4.11535 \quad (4)$$

Using standard 1% resistor values for R1 of 5.76 kΩ and R2 of 1.4 kΩ yields an R1 to R2 ratio of 4.1143.

The input voltage V_{IN} can be calculated using the value register reading (VR) using this equation:

Copyright © 2003–2013, Texas Instruments Incorporated

$$V_{IN} = \left(\frac{R1}{R2} + 1\right) \times \left[\left(1.236V \times \frac{VR}{256}\right) - 3.3V\right] + 3.3V$$
$$= (24.69\ mV \times VR) - 13.5771V \quad (5)$$

The table below summarizes the theoretical voltage values for value register readings near −12V.

Value Register	V_{IN}	% Δ from −12V
15	-13.2068	-10.0563
16	-13.1821	-9.8505
17	-13.1574	-9.6448
18	-13.1327	-9.4390
19	-13.1080	-9.2332
20	-13.0833	-9.0275
21	-13.0586	-8.8217
22	-13.0339	-8.6159
23	-13.0092	-8.4101
24	-12.9845	-8.2044
25	-12.9598	-7.9986
26	-12.9351	-7.7928
27	-12.9104	-7.5871
28	-12.8858	-7.3813
29	-12.8611	-7.1755
30	-12.8364	-6.9698
31	-12.8117	-6.7640
32	-12.7870	-6.5582
33	-12.7623	-6.3524
34	-12.7376	-6.1467
35	-12.7129	-5.9409
36	-12.6882	-5.7351
37	-12.6635	-5.5294
38	-12.6388	-5.3236
39	-12.6141	-5.1178
40	-12.5894	-4.9121
41	-12.5648	-4.7063
42	-12.5401	-4.5005
43	-12.5154	-4.2947
44	-12.4907	-4.0890
45	-12.4660	-3.8832
46	-12.4413	-3.6774
47	-12.4166	-3.4717
48	-12.3919	-3.2659
49	-12.3672	-3.0601
50	-12.3425	-2.8544
51	-12.3178	-2.6486
52	-12.2931	-2.4428
53	-12.2684	-2.2370
54	-12.2438	-2.0313
55	-12.2191	-1.8255
56	-12.1944	-1.6197

Copyright © 2003–2013, Texas Instruments Incorporated

Value Register	V_{IN}	% Δ from −12V
57	-12.1697	-1.4140
58	-12.1450	-1.2082
59	-12.1203	-1.0024
60	-12.0956	-0.7967
61	-12.0709	-0.5909
62	-12.0462	-0.3851
63	-12.0215	-0.1793
64	-11.9968	0.0264
65	-11.9721	0.2322
66	-11.9474	0.4380
67	-11.9228	0.6437
68	-11.8981	0.8495
69	-11.8734	1.0553
70	-11.8487	1.2610
71	-11.8240	1.4668
72	-11.7993	1.6726
73	-11.7746	1.8784
74	-11.7499	2.0841
75	-11.7252	2.2899
76	-11.7005	2.4957
77	-11.6758	2.7014
78	-11.6511	2.9072
79	-11.6264	3.1130
80	-11.6018	3.3188
81	-11.5771	3.5245
82	-11.5524	3.7303
83	-11.5277	3.9361
84	-11.5030	4.1418
85	-11.4783	4.3476
86	-11.4536	4.5534
87	-11.4289	4.7591
88	-11.4042	4.9649
89	-11.3795	5.1707
90	-11.3548	5.3765
91	-11.3301	5.5822
92	-11.3054	5.7880
93	-11.2807	5.9938
94	-11.2561	6.1995
95	-11.2314	6.4053
96	-11.2067	6.6111
97	-11.1820	6.8168
98	-11.1573	7.0226
99	-11.1326	7.2284
100	-11.1079	7.4342
101	-11.0832	7.6399
102	-11.0585	7.8457
103	-11.0338	8.0515
104	-11.0091	8.2572
105	-10.9844	8.4630

Copyright © 2003–2013, Texas Instruments Incorporated

Value Register	V_{IN}	% Δ from −12V
106	-10.9597	8.6688
107	-10.9351	8.8745
108	-10.9104	9.0803
109	-10.8857	9.2861
110	-10.8610	9.4919
111	-10.8363	9.6976
112	-10.8116	9.9034
113	-10.7869	10.1092

3.7 DYNAMIC Vccp MONITORING USING VID

The AD_IN7 (CPU1 Vccp) and AD_IN8 (CPU2 Vccp) inputs are dynamically monitored using the P1_VIDx and P2_VIDx inputs to determine the limits. The dynamic comparisons operate independently of the static comparisons which use the statically programmed limits.

According to the VRM/VRD 10 specification when a VID signal is ramping to a new value, it steps by one LSB at a time, and one step occurs every 5 µs. In worse case, up to 20 steps may occur at once over 100 µs. The Vccp voltage from the VRD has to settle to the new value within 50 µs of the last VID change. The LM93 expects that the VID changes will not occur more frequently than every 5 µs.

The VID signal can be changed by the processor under program control, by internal thermal events or by external control, like force $\overline{\text{PROCHOT}}$.

The reference voltages selected by each value of the 6 bit VID can be found in the VRM/VRD 10 spec. Transient VID values caused by line-to-line skew are ignored by the LM93. See the VRM/VRD 10 spec for the worst case line-to-line skew.

The LM93 averages the VID values over a sampling window to determine the average voltage that the VID input was indicating during the sampling window. At the completion of a voltage conversion cycle the LM93 performs limit comparisons based on average VID values and not instantaneous values. The upper limit is determined by adding the upper limit offset to the average voltage indicated by VID. The lower limit is determined by subtracting the lower limit offset from average voltage indicated by VID. If the AD_IN7 (or AD_IN8) voltage falls outside the upper and lower limits, an error event is generated. Dynamic and static comparisons are performed once every 100 ms. The averaging time interval is 1.5 ms.

If at any time during the Vccp sampling window, the VID code indicates that the VRD should turn off its output, the dynamic Vccp checking is disabled for that sample.

The comparison accuracy is ±25 mV, therefore the comparison limits must be set to include this error. Since the Vccp voltage may be in the process of settling to a new value (due to a VID change), this settling should be taken into account when setting the upper and lower limit offsets.

The LM93 has a limitation on the upper limit voltage for dynamic Vccp checking. The upper limit cannot exceed 1.5875V. If the sum of the voltage indicated by VID and the upper offset voltage exceed 1.5875, the upper limit checking is disabled.

3.8 V_{REF} OUTPUT

V_{REF} is a fixed voltage to be used by an external VRD or as a voltage reference input for the BMC A/D inputs. V_{REF} is 2.5V ±1%. There is internal current limit protection for the V_{REF} output in case it gets shorted to supply or ground accidentally.

Copyright © 2003–2013, Texas Instruments Incorporated

3.9 PROCHOT BACKGROUND INFORMATION

PROCHOT is an output from a processor that indicates that the processor has reached a predetermined temperature trip point. At this trip point the processor can be programmed to lower its internal operating frequency and/or lower its supply voltage by changing the value of the 6 bit VID that it supplies to the VRD. The final VID setting and the rate at which it transitions to the new VID is programmable within the processor.

If PROCHOT is 100% throttled, it does not mean that the CPU is not executing, but it may mean that the CPU is about to encounter a thermal trip if the processor temperature continues to rise.

PROCHOT is also an input to some processors so that an external controller can force a thermal throttle based on external events.

PROCHOT is no longer asserted by the processor when the temperature drops below the predefined thermal trip point.

Oscillation around the trip point is avoided by the processor by requiring that the temperature be above/below the trip point for a predetermined period of time. A counter inside the processor is used to track this time and it has to be incremented to a max count for an above temperature trip and decremented to zero when below the trip temperature setting, to remove the trip.

The minimum time for PROCHOT assertion is time dependant on the FSB frequency. The minimum time that the processor asserts PROCHOT is estimated to be 187 µs.

3.10 PROCHOT MONITORING

PROCHOT monitoring applies to both the P1_PROCHOT and P2_PROCHOT inputs. Both inputs are monitored in the same fashion, but the following description discusses a single monitor. (Px_PROCHOT represents both P1_PROCHOT and P2_PROCHOT).

PROCHOT monitoring is meant to achieve two goals. One goal is to measure the percentage of time that PROCHOT is asserted over a programmable time period. The result of this measurement can be read from an 8-bit register where one LSB equals 1/256th of the PROCHOT Time Interval (0.39%). The second goal is to have a status register that indicates, as a coarse percentage, the amount of time a processor has been throttled. This second goal is required in order to communicate information over the NIC using ASF, i.e. status can be sent, not values.

To achieve the first goal, the PROCHOT input is monitored over a period of time as defined by the PROCHOT Time Interval Register. At the end of each time period, the 8-bit measurement is transferred to the Current Px_PROCHOT register. Also at the end of each measurement period, the Current Px_PROCHOT register value is moved to the Average Px_PROCHOT register by adding the new value to the old value and dividing the result by 2. Note that the value that is averaged into the Average Px_PROCHOT register is not the new measurement but rather the previous measurement. If the SMBus writes to the Current P1_PROCHOT (or Current P2_PROCHOT) register, the capture cycle restarts for both monitoring channels (P1_PROCHOT and P2_PROCHOT). Also note, that a strict average of two 8-bit values may result in Average Px_PROCHOT reflecting a value that is one LSB lower than the Current Px_PROCHOT in steady state.

It should be noted that the 8-bit result has a positive bias of one half of an LSB. This is necessary because a value of 00h represents that Px_PROCHOT was not asserted at all during the sampling window. Any amount of throttling results in a reading of 01h.

The following table demonstrates the mapping for the 8-bit result:

 Copyright © 2003–2013, Texas Instruments Incorporated

8–Bit Result	Percentage Thottled
0	Exactly 0%
1	Between 0% and 0.39%
2	Between 0.39% and 0.78%
~	~
n	Between (n-1)/256 and n/256
~	~
253	Between 98.4% and 98.8%
254	Between 98.8% and 99.2%
255	Greater than 99.2%

To achieve the second goal, the LM93 has several comparators that compare the measured percentage reading against several fixed and 1 variable value. The variable value is user programmable.

The result of these comparisons generates several error status bits described in the following table:

Status Description	Comparison Formula
100% Throttle	PROCHOT was never de-asserted during monitoring interval.
Greater than or equal to 75% and less than 100%	193 ≤ measured value and not 100%
Greater than or equal to 50% and less than 75%	129 ≤ measured value < 193
Greater than or equal to 25% and less than 50%	65 ≤ measured value < 129
Greater than or equal to 12.5% and less than 25%	33 ≤ measured value < 65
Greater than 0% and less than 12.5%	0 < measured value < 33
Greater than 0%	0 < measured value
Greater than user limit	user limit < measured value

These status bits are reflected in the $\overline{\text{PROCHOT}}$ Error Status Registers. Each of the $\overline{\text{P1_PROCHOT}}$ and $\overline{\text{P2_PROCHOT}}$ inputs is monitored independently, and each has its own set of status registers.

In S3 and S4/5 sleep states, the $\overline{\text{PROCHOT}}$ Monitoring function does not run. The Current $\overline{\text{Px_PROCHOT}}$ registers are reset to 00h and the Average $\overline{\text{Px_PROCHOT}}$ registers hold their current state. Once the sleep state changes back to S0, the monitoring function is restarted. After the first $\overline{\text{PROCHOT}}$ measurement has been made, the measurement is written directly into the Current and Average $\overline{\text{Px_PROCHOT}}$ registers without performing any averaging. Averaging returns to normal on the second measurement.

3.11 $\overline{\text{PROCHOT}}$ OUTPUT CONTROL

In some cases, it is necessary for the LM93 to drive the $\overline{\text{Px_PROCHOT}}$ outputs low. There are several conditions that cause this to happen.

The LM93 can be told to logically short the two $\overline{\text{PROCHOT}}$ inputs together. When this is done, the LM93 monitors each of the $\overline{\text{Px_PROCHOT}}$ inputs. If any external device asserts one of the $\overline{\text{PROCHOT}}$ signals, the LM93 responds by asserting the other $\overline{\text{PROCHOT}}$ signal until the first $\overline{\text{PROCHOT}}$ signal is de-asserted. This feature should never be enabled if the $\overline{\text{PROCHOT}}$ signals are already being shorted by another means.

Whenever one of the $\overline{\text{VRDx_HOT}}$ inputs is asserted, the corresponding $\overline{\text{Px_PROCHOT}}$ pins are asserted by the LM93. The response time is less than 10 µs. When the $\overline{\text{VRDx_HOT}}$ input is de-asserted, the $\overline{\text{Px_PROCHOT}}$ pin is no longer asserted by the LM93. If the LM93 is configured to short the $\overline{\text{PROCHOT}}$ signals together, it always asserts them together whenever either of the $\overline{\text{VRDx_HOT}}$ inputs is asserted.

Software can manually program the LM93 to drive a PWM type signal onto $\overline{\text{P1_PROCHOT}}$ or $\overline{\text{P2_PROCHOT}}$. This is done via the $\overline{\text{PROCHOT}}$ Override register. See the description of this register for more details. Once again, if the LM93 is configured to short the $\overline{\text{PROCHOT}}$ signals together, it always asserts them together whenever this function is enabled.

3.12 FAN SPEED MEASUREMENT

The fan tach circuitry measures the period of the fan pulses by enabling a counter for two periods of the fan tach signal. The accumulated count is proportional to the fan tach period and inversely proportional to the fan speed. All four fan tach signals are measured within 1 second.

Fans in general do not over-speed if run from the correct voltage, so the failure condition of interest is under speed due to electrical or mechanical failure. For this reason only low-speed limits are programmed into the limit registers for the fans. It should be noted that, since fan period rather than speed is being measured, a fan tach error event occurs when the measurement *exceeds* the limit value.

3.13 SMART FAN SPEED MEASUREMENT

If a fan is driven using a low-side drive PWM, the tachometer output of the fan is corrupted. The LM93 includes smart tachometer circuitry that allows an accurate tachometer reading to be achieved despite the signal corruption. In smart tach mode all four signals are measured within 4 seconds.

A smart tach capture cycle works according to the following steps:

1. Both PWM outputs are synchronized such that they activate simultaneously.
2. Both PWM output active times are extended for up to 50 ms.
3. The number of tach signal periods during the 50 ms interval are tracked:
   (a) If less than 1 period is sensed during the 50 ms extension the result returned is 3FFh.
   (b) After one period occurs the count for that period is memorized.
   (c) If during the 50 ms interval 2 periods do not occur, the tach value reported is the 1 period count multiplied by 2.
   (d) If 2 periods do occur, the 2 period count is loaded into the value register and the 50 ms PWM extension is terminated.

The lowest two bits in each of the Fan Tach value registers are reserved. The smart tach feature takes advantage of these bits. In normal tach mode, these bits return 00. In smart tach mode the two bits determine the accuracy level of the reading. 11 is most accurate (2 periods used) and 10 is the least accurate (1 period used). If less than 1 period occurred during the measurement cycle, the lower two bits are set to 10.

In smart fan tach mode, the TACH_EDGE field is honored in the LM93 Status/Control register. If only one edge type is active, the measurement always uses that edge type (rising or falling). If both are active, the measurement uses whichever edge type occurs first.

Typically the minimum RPM captured by smart fan tach mode is 900 RPM for a fan that produces two pulses per revolution at about 50% duty cycle.

3.14 Inputs/Outputs

Besides all the pins associated with sensor inputs the LM93 has several pins that are assigned for other specific functions.

 Copyright © 2003–2013, Texas Instruments Incorporated

3.14.1 $\overline{\text{ALERT}}$ OUTPUT

The $\overline{\text{ALERT}}$ output is an active-low open drain output signal. The $\overline{\text{ALERT}}$ output is used to signal a micro-controller that one or more sensors have crossed their corresponding limit thresholds. This is generally not a fatal event unless the micro-controller decides it to be.

If enabled, the $\overline{\text{ALERT}}$ output is asserted whenever any bit in any BMC Error Status register is set (with the exception of the fixed $\overline{\text{PROCHOT}}$ threshold bits). By definition, when $\overline{\text{ALERT}}$ is enabled, it always matches the inverse of the BMC_ERR bit in the LM93 Status/Control register. When the $\overline{\text{ALERT}}$ output is disabled, an alert event can still be determined by reading the state of the BMC_ERR bit.

The $\overline{\text{ALERT}}$ functions like an interrupt. The LM93 does not support the SMBus ARA (Alert Response Address) protocol.

$\overline{\text{ALERT}}$ is only de-asserted when there are no error status bits set in any BMC Error Status registers. Alternatively, software can disable the $\overline{\text{ALERT}}$ output to cause it to de-assert. The $\overline{\text{ALERT}}$ output re-asserts once enabled if any BMC Error Status register bits are still set.

Further information on how the $\overline{\text{ALERT}}$ output behaves can be found in MASKING, ERROR STATUS AND ALERT.

3.14.2 $\overline{\text{RESET}}$ INPUT/OUTPUT

This pin acts as an active low reset output when power is applied to the LM93. It is asserted when the LM93 first sees a voltage that exceeds the internal POR level on its +3.3V S/B V_{DD} input. The internal registers of the LM93 are reset to their defaults when power is applied.

After this reset has completed, the $\overline{\text{RESET}}$ pin becomes an input. When an external device asserts $\overline{\text{RESET}}$, the LM93 clears the LOCK bit in the LM93 Configuration register. This feature allows critical registers to be locked and provides a controlled mechanism to unlock them.

Asserting $\overline{\text{RESET}}$ externally causes the Sleep State Control register to be automatically set to S4/5. This causes several error events to be masked according to the S4/5 masking definitions. Refer to the Register Descriptions for more information.

3.14.3 PWM1 AND PWM2 OUTPUTS

The PWM outputs are used to control the speed of fans. The output signal duty cycle can automatically be controlled by the temperature of one or more temperature zones. It is also influenced by various other inputs and registers. See FAN CONTROL for further information on the behavior of the PWM outputs.

3.14.4 $\overline{\text{SCSI_TERMx}}$ INPUTS

These inputs can be used to monitor the status of the electronic fuse on each of the SCSI channels. In prior implementations the reference voltage out to the terminators was measured. When LVDS SCSI was introduced this reference voltage could take on multiple voltage levels depending on the mode of the SCSI bus. Also when the SCSI terminators were disabled, the V_{REF} voltage could not be ensured. Monitoring individual terminators was also pin intensive. All of these issues caused problems that were difficult to work around so moving to monitoring the fuse was selected as the solution.

These inputs do not have to be used for monitoring SCSI fuses. Assertion of the $\overline{\text{SCSI_TERMx}}$ inputs to a Low sets the associated bits the status registers. Therefore, any active low signal could be connected to these pins to generate an error event.

Copyright © 2003–2013, Texas Instruments Incorporated

3.14.5 $\overline{\text{VRD1_HOT}}$ AND $\overline{\text{VRD2_HOT}}$ INPUTS

These inputs monitor the thermal sensor associated with each processor VRD on a baseboard. When one of the inputs is activated, it indicates that the VRD has exceeded a predetermined temperature threshold. The LM93 responds by gradually increasing the duty cycle of any PWM outputs that are bound to the corresponding processor and setting the appropriate error status bits. The corresponding $\overline{\text{PROCHOT}}$ signal is also asserted. See the FAN CONTROL and the PROCHOT OUTPUT CONTROL for more information.

3.14.6 GPIO PINS

The LM93 has 8 GPIO pins than can act as either as inputs or outputs. Each can be configured and controlled independently. When acting as an input the pin can be masked to prevent it from setting a corresponding bit in the GPI Error status registers.

3.14.7 FAN TACH INPUTS

The fan inputs are Schmitt-Trigger digital inputs. Schmitt-trigger input circuitry is included to accommodate slow rise and fall times typical of fan tachometer outputs.

The maximum input signal range is 0V to +6.0V, even when V_{DD} is less than 5V. In the event that these inputs are supplied from fan outputs, which exceed 0V to +6.0V, either resistive attenuation of the fan signal or diode clamping must be included to keep inputs within an acceptable range, thereby preventing damage to the LM93.

Hot plugging fans can involve spikes on the Tach signals of up to 12V so diode protection or other circuitry is required. For “Hot Plug” fans, external clamp diodes may be required for signal conditioning.

3.15 SMBus Interface

The SMBus is used to communicate with the LM93. The LM93 provides the means to monitor power supplies for fan status and power failures. LM93 is designed to be tolerant to 5V signalling. Necessary pull-ups are located on the baseboard. Care should be taken to ensure that only one pull-up is used for each SMBus signal. For proper operation, the SMBus slave addresses of all devices attached to the bus must comply with those listed in this document. The SMBus interface obeys the SMBus 2.0 protocols and signaling levels.

The SMBus interface of the LM93 does not load down the SMBus if no power is applied to the LM93. This allows a module containing the LM93 to be powered down and replaced, if necessary.

3.15.1 SMBUS ADDRESSING

Each time the LM93 is powered up, it latches the assigned SMBus slave address (determined by ADDR_SEL) during the first valid SMBus transaction in which the first five bits of the targeted slave address match those of the LM93 slave address. Once the address has been latched, the LM93 continues to use that address for all future transactions until power is lost.

The address select input detects three different voltage levels and allows for up to 3 devices to exist in a system. The address assignment is as follows:

Address Select Pin (ADDR_SEL)	Slave Address Assignment
High	01011 01
$V_{DD}/2$	01011 10
Low	01011 00

Copyright © 2003–2013, Texas Instruments Incorporated

3.15.2 DIGITAL NOISE EFFECT ON SMBUS COMMUNICATION

Noise coupling into the digital lines (greater than 150mV), overshoot greater than V_{DD} and undershoot less than GND, may prevent successful SMBus communication with the LM93. SMBus No Acknowledge (NACK) is the most common symptom, causing unnecessary traffic on the bus. Although, the SMBus maximum frequency of communication is rather low (100 kHz max), care still needs to be taken to ensure proper termination within a system with multiple parts on the bus and long printed circuit board traces. The LM93 includes on chip low-pass filtering of the SMBCLK and SMBDAT signals to make it more noise immune. Minimize noise coupling by keeping digital traces out of switching baseboard areas as well as ensuring that digital lines containing high speed data communications cross at right angles to the SMBDAT and SMBCLK lines.

3.15.3 GENERAL SMBUS TIMING

The SMBus 2.0 specification defines specific conditions for different types of read and write operations but in general the SMBus protocol operates as follows:

The master initiates data transfer by establishing a START condition, defined as a high to low transition on the serial data line SMBDAT while the serial clock line SMBCLK remains high. This indicates that a data stream follows. All slave peripherals connected to the serial bus respond to the START condition, and shift in the next 8 bits. This consists of a 7-bit slave address (MSB first) plus a R/W bit, which determines the direction of the data transfer, i.e. whether data is written to or read from the slave device (0 = write, 1 = read).

The peripheral whose address corresponds to the transmitted address responds by pulling the data line low during the low period before the ninth clock pulse, known as the Acknowledge Bit, and holding it low during the high period of this clock pulse. All other devices on the bus now remain idle while the selected device waits for data to be read from or written to it. If the R/W bit is a 0 then the master writes to the slave device. If the R/W bit is a 1 the master reads from the slave device.

Data is sent over the serial bus in sequences of 9 clock pulses, 8 bits of data followed by an Acknowledge bit. Data transitions on the data line must occur during the low period of the clock signal and remain stable during the high period, as a low to high transition when the clock is high may be interpreted as a STOP signal.

If the operation is a write operation, the first data byte after the slave address is a command byte. This tells the slave device what to expect next. It may be an instruction, such as telling the slave device to expect a block write, or it may simply be a register address that tells the slave where subsequent data is to be written.

Since data can flow in only one direction as defined by the R/W bit, it is not possible to send a command to a slave device during a read operation. Before doing a read operation, it is necessary to do a write operation to tell the slave what sort of read operation to expect and/or the address from which data is to be read.

When all data bytes have been read or written, stop conditions are established. In WRITE mode, the master will allow the data line to go high during the 10th clock pulse to assert a STOP condition. In READ mode, the slave drives the data not the master. For the bit in question, the slave is looking for an acknowledge and the master doesn't drive low. This is known as ‘No Acknowledge’. The master then takes the data line low during the low period before the 10th clock pulse, then high during the 10th clock pulse to assert a STOP condition.

Note, a repeated START may be given only between a write and read operation that are in succession.

Copyright © 2003–2013, Texas Instruments Incorporated

3.15.4 SMBUS ERROR SAFETY FEATURES

To provide a more robust SMBus interface, the LM93 incorporates a timeout feature for both SMBCLK and SMBDAT. If either signal is low for a long period of time (see SMBus AC Characteristics), the LM93 SMBus state machine reverts to the idle state and waits for a START signal. Large block transfers of all zeros should be avoided if the SMBCLK is operating at a very low frequency to avoid accidental timeouts. Pulling the Reset pin low does not reset the SMBus state machine. If the LM93 SMBDAT pin is low during a system reset, the LM93's state machine timeouts and resets automatically. If the LM93's SMBDAT pin is high during a system reset, the first assertion of a start by the master resets the LM93's interface state machine.

Although it is a violation of the SMBus specification, in some cases a START or STOP signal occurs in the middle of a byte transfer instead of coming after an acknowledge bit. If this occurs, only a partial byte was transferred. If a byte was being written, it is aborted and the partial byte is not committed. If a byte was being read from a read-to-clear register, the register is not cleared.

3.15.5 SERIAL INTERFACE PROTOCOLS

The LM93 contains volatile registers, the registers occupy address locations from 00h to EFh.

Data can be read and written as a single byte, a word, or as a block of several bytes. The LM93 supports the following SMBus/I^2C transactions/protocols:

— Send Byte

— Write Byte

— Write Word

— SMBus Write Block

— I^2C Block Write

— Read Byte

— Read Word

— SMBus Read Block

— SMBus Block-Write Block-Read Process Call

— I^2C Block Read

In addition to these transactions the LM93 supports a few extra items and also has some behavior that must be defined beyond the SMBus 2.0 specification. No other SMBus 2.0 transactions are supported (PEC, ARA etc.).

The SMBus specification defines several protocols for different types of read and write operations. The ones used in the LM93 are discussed below. The following abbreviations are used in the diagrams:

S — START

P — STOP

R — READ

W — WRITE

A — ACKNOWLEDGE

/A — NO ACKNOWLEDGE

Copyright © 2003–2013, Texas Instruments Incorporated

3.15.5.1 Address Incrementing

The established base address does not increment. Repeatedly reading without re-establishing a new base address returns data from the same address each time. I^2C read transactions can use this information and skip reestablishing the base address, when only one master is used. One exception to this rule exists when a block write and block read is used to emulate a block write/read process call. This is detailed later, see the Block Write/Read Process Call description.

3.15.5.2 Block Command Code Summary

Block command codes control the block read and write operations of the LM93 as summarized in the following table:

Command Code Name	Value	Description
Block Write Command	F0h	SMBus Block Write Command Code
Block Read Command	F1h	SMBus Block Write/Read Process Call
Fixed Block 0	F2h	Fixed Block Read Command Code: address 40h, size 8 bytes
Fixed Block 1	F3h	Fixed Block Read Command Code: address 48h, size 8 bytes
Fixed Block 2	F4h	Fixed Block Read Command Code: address 50h, size 6 bytes
Fixed Block 3	F5h	Fixed Block Read Command Code: address 56h, size 16 bytes
Fixed Block 4	F6h	Fixed Block Read Command Code: address 67h, size 4 bytes
Fixed Block 5	F7h	Fixed Block Read Command Code: address 6Eh, size 8 bytes
Fixed Block 6	F8h	Fixed Block Read Command Code: address 78h, size 12 bytes
Fixed Block 7	F9h	Fixed Block Read Command Code: address 90h, size 32 bytes
Fixed Block 8	FAh	Fixed Block Read Command Code: address B4h, size 8 bytes
Fixed Block 9	FBh	Fixed Block Read Command Code: address C8h, size 8 bytes
Fixed Block 10	FCh	Fixed Block Read Command Code: address D00h, size 16 bytes
Fixed Block 11	FDh	Fixed Block Read Command Code: address E5h, size 9 bytes

3.15.5.3 Write Operations

The LM93 supports the following SMBus write protocols.

3.15.5.3.1 Write Byte

In this operation the master device sends an address byte and one data byte to the slave device, as follows:

1. The master device asserts a START condition.
2. The master sends the 7-bit slave address followed by the write bit (low).
3. The addressed slave device asserts ACK.
4. The master sends a command code (register address).
5. The slave asserts ACK.

6. The master sends the data byte.
7. The slave asserts ACK.
8. The master asserts a STOP condition to end the transaction.

1	2		3	4	5	6	7	8
S	Slave Address	W	A	Register Address	A	Data Byte	A	P

3.15.5.3.2 Write Word

In this operation the master device sends an address byte and two data bytes to the slave device, as follows:

1. The master device asserts a START condition.
2. The master sends the 7-bit slave address followed by the write bit (low).
3. The addressed slave device asserts ACK.
4. The master sends a command code (register address).
5. The slave asserts ACK.
6. The master sends the low data byte.
7. The slave asserts ACK.
8. The master sends the high data byte.
9. The slave asserts ACK.
10. The master asserts a STOP condition to end the transaction.

1	2		3	4	5	6	7	8	9	10
S	Slave Address	W	A	Register Address	A	Data Byte Low	A	Data Byte High	A	P

3.15.5.3.3 SMBus Write Block to Any Address

The start address for a block write is embedded in this transaction. In this operation the master sends a block of data to the slave as follows:

1. The master device asserts a START condition.
2. The master sends the 7-bit slave address followed by the write bit (low).
3. The addressed slave device asserts ACK.
4. The master sends a command code that tells the slave device to expect a block write. The LM93 command code for a block write is F0h.
5. The slave asserts ACK.
6. The master sends a byte that tells the slave device how many data bytes it will send (N). The SMBus specification allows a maximum of 32 data bytes to be sent in a block write.
7. The slave asserts ACK.
8. The master sends data byte 1, the starting address of the block write.
9. The slave asserts ACK after each data byte.
10. The master sends data byte 2.
11. The slave asserts ACK.
12. The master continues to send data bytes and the slave asserts ACK for each byte.
13. The master asserts a STOP condition to end the transaction.

Copyright © 2003–2013, Texas Instruments Incorporated

1	2		3	4	5	6	7	8	9	10	11		12		13
S	Slave Address	W	A	Command F0h (Block Write)	A	Byte Count (N)	A	Data Byte 1 (Start Address)	A	Data Byte 2	A		Data Byte N	A	P

Special Notes

1. Any attempts to write to bytes beyond normal address space are acknowledged by the LM93 but are ignored.
2. Block writes do not wrap from address FFh back to 00h the address remains at FFh.
3. The Byte Count field is ignored by the LM93. The master device may send more or less bytes and the LM93 accepts them.
4. The SMBus specification requires that block writes never exceed 32 data bytes. Meeting this requirement means that only 31 actual data bytes can be sent (the register address counts as one byte). The LM93 does not care if this requirement is met.

3.15.5.3.4 I²C Block Write

In this transaction the master sends a block of data to the LM93 as follows:

1. The master device asserts a START condition.
2. The master sends the 7-bit slave address followed by the write bit (low).
3. The addressed slave device asserts ACK.
4. The master sends the starting address of the block write.
5. The slave asserts ACK after each data byte.
6. The master sends data byte 1.
7. The slave asserts ACK.
8. The master continues to send data bytes and the slave asserts ACK for each byte.
9. The master asserts a STOP condition to end the transaction

1	2		3	4	5	6	7		8		9
S	Slave Address	W	A	Register Address	A	Data Byte 1	A		Data Byte N	A	P

Special Notes:

1. Any attempts to write to bytes beyond normal address space are acknowledged by the LM93 but are ignored.
2. Block writes do not wrap from address FFh back to 00h the address remains at FFh.

3.15.5.4 Read Operations

The LM93 uses the following SMBus read protocols.

3.15.5.4.1 Read Byte

In the LM93, the read byte protocol is used to read a single byte of data from a register. In this operation the master device receives a single byte from a slave device, as follows:

1. The master device asserts a START condition.
2. The master sends the 7-bit slave address followed by the write bit (low).
3. The addressed slave device asserts ACK.
4. The master sends a register address.
5. The slave asserts an ACK.
6. The master sends a Repeated START.

7. The master sends the slave address followed by the read bit (high).
8. The slave asserts an ACK.
9. The master receives a data byte and asserts a NACK.
10. The master asserts a STOP condition and the transaction ends.

1	2		3	4	5	6	7		8	9		10
S	Slave Address	W	A	Register Address	A	S	Slave Address	R	A	Data Byte	/A	P

3.15.5.4.2 Read Word

In the LM93, the read word protocol is used to read two bytes of data from a register or two consecutive registers. In this operation the master device reads two bytes from a slave device, as follows:

1. The master device asserts a START condition.
2. The master sends the 7-bit slave address followed by the write bit (low).
3. The addressed slave device asserts ACK.
4. The master sends a register address.
5. The slave asserts an ACK.
6. The master sends a Repeated START.
7. The master sends the slave address followed by the read bit (high).
8. The slave asserts an ACK.
9. The master receives the Low data byte and asserts an ACK.
10. The master receives the High data byte and asserts a NACK.
11. The master asserts a STOP condition and the transaction ends.

1	2		3	4	5	6	7		8	9		10		11
S	Slave Address	W	A	Register Address	A	S	Slave Address	R	A	Data Byte Low	A	Data Byte High	/A	P

3.15.5.4.3 SMBus Block-Write Block-Read Process Call

This transaction is used to read a block of data from the LM93. Below is the sequence of events that occur in this transaction:

1. The master device asserts a START condition.
2. The master sends the 7-bit slave address followed by the write bit (low).
3. The addressed slave device asserts ACK.
4. The master sends a command code that tells the slave device to expect a block read (F1h) and the slave asserts ACK.
5. The master sends the Byte Count for this write which is 2 and the slave asserts ACK.
6. The master sends the Start Register Address for the block read and the slave asserts the ACK.
7. The master sends the Byte Count (1-32) for the block read processes call and the slave asserts ACK.
8. The master asserts a repeat START condition.
9. The master sends the 7-bit slave address followed by the read bit (high).
10. The slave asserts ACK.
11. The master receives a byte count data byte that tells it how many data bytes will received. This field reflects the number of bytes requested by the Byte Count transmitted to the LM93. The SMBus specification allows a maximum of 32 data bytes to be received in a block read. Then master asserts ACK.

Copyright © 2003–2013, Texas Instruments Incorporated

12. The master receives byte 1 and then asserts ACK.
13. The master receives byte 2 and then asserts ACK.
14. The master receives N-3 data bytes, and asserts ACK for each one.
15. The master receives data byte N and asserts a NACK.
16. The master asserts a STOP condition to end the transaction.

1	2		3	4		5		6		7		8	9		10	
S	Slave Address	W	A	Block Read Command Code (F1h)	A	Byte Count (2h)	A	Start Register Address	A	Byte Count (1–20h) (N)	A	S	Slave Address	R	A	

	11		12		13		14	15	15	16
	Byte Count (1–20h) (N)	A	Data Byte 1	A	Data Byte 2	A		Data Byte N	/A	P

Special Notes:

1. The LM93 returns 00h when address locations outside of normal address space are read.
2. Block reads do not wrap around from address FFh to 00h
3. If the master acknowledges more bytes that it requested, the LM93 continues to supply data until the master does not acknowledge a byte.
4. If the master does not acknowledges a byte to prematurely abort a block read, the LM93 gets off the bus to allow the master to issue a STOP signal.

3.15.5.4.4 Simulated SMBus Block-Write Block-Read Process Call

Alternatively, if the master cannot support an SMBus Block-Write Block-Read process call, it can be emulated by two transactions (a block write followed by a block read). This should only be done in a single master system, since in a dual master system collisions can occur that corrupt the data and transaction. Below is the sequence of events for these transactions:

1. The master issues a START to start this transaction.
2. The master sends the 7-bit slave address followed by a write bit (low).
3. The slave asserts the ACK.
4. The master sends the Block Read command code (F1h) and the slave asserts the ACK.
5. The master sends the Byte Count (2h) for this transaction and the slave asserts the ACK.
6. The master sends the Start Register Address and the slave asserts the ACK.
7. The master sends the Byte Count (1-20h) for the Block-Read Process Call and the slave asserts the ACK.
8. The master sends a STOP to end this transaction.
9. The master sends a START to start this transaction.
10. The master sends the 7-bit slave address followed by a write bit (low) and the slave asserts the ACK.
11. The master sends the Block Read Command code (F1h) and the slave asserts the ACK.
12. The master sends a repeat START.
13. The master sends the 7-bit slave address followed by a read bit (high) and the slave asserts the ACK.
14. The master receives Byte Count (this matches the size sent by the master in step 7) and asserts the ACK.
15. The master receives Data Byte 1 and asserts the ACK.
16. The master receives Data Byte 2 and asserts the ACK.
17. The master receives N-3 data bytes, and asserts ACK for each one.

Copyright © 2003–2013, Texas Instruments Incorporated

18. The master receives the last data byte and asserts a NACK.
19. The master issues a STOP to end this transaction.

1	2		3	4		5		6		7		8	9	10			
S	Slave Address	W	A	Block Read Command Code (F1h)	A	Byte Count (2h)	A	Start Register Address	A	Byte Count (1–20h) (N)	A	P	S	Slave Address	W	A	

	11		12	13				14		15		16			17		16
	Block Read Command Code (F1h)	A	S	Slave Address	R	A		Byte Count (1–20h) (N)	A	Data Byte 1	A	Data Byte 2	A		Data Byte N	/A	P

Special Notes:

1. Steps 9 through 19 can be repeated to read another block of data. The address auto-increments such that the next block starts where the last block left off. The size returned by the LM93 is the same each time.
2. The LM93 returns 00h when address locations outside of normal address space are read.
3. Block reads do not wrap around from address FFh to 00h
4. If the master acknowledges more bytes that it requested, the LM93 continues to supply data until the master does not acknowledge a byte.
5. If the master does not acknowledges a byte to prematurely abort a block read, the LM93 gets off the bus to allow the master to issue a STOP signal.
6. After a block read is finished, the base address of the LM93 is updated to point to the byte just beyond the last byte read.

3.15.5.4.5 SMBus Fixed Address Block Reads

Block reads can be performed from pre-defined addresses. A special command code has been reserved for each pre-defined address. See the Block Command Code Summary for more details on the command codes. Below is the sequence of events that occur for this type of block read:

1. The master sends a START to start this transaction.
2. The master sends the 7-bit slave address followed by a write bit (low).
3. The slave asserts an ACK.
4. The master sends a Fixed Block Command Code (F2h-FDh) and the slave asserts an ACK.
5. The master sends a repeated START.
6. The master sends the 7-bit slave address followed by a read bit (high).
7. The slave asserts an ACK.
8. The master receives the Byte Count (depends on the Fixed Block Command Code used) and asserts an ACK.
9. The master receives the first data byte and asserts an ACK.
10. The master continues to receive data bytes and asserting an ACK.
11. The master receives the last data byte.
12. The master asserts a NACK.
13. The master issues a STOP to end this transaction.

 Copyright © 2003–2013, Texas Instruments Incorporated

1	2		3	4		5	6		7	8		9		10	11	12	13
S	Slave Address	W	A	Fixed Block Command Code (F2h–FDh)	A	S	Slave Address	R	A	Byte Count (N)	A	Data Byte 1	A		Data Byte N	/A	P

Special Notes:

1. The LM93 returns 00h when address locations outside of normal address space are read.
2. Block reads do not wrap around from address FFh to 00h.
3. If the master acknowledges more bytes that it requested, the LM93 continues to supply data until the master does not acknowledge a byte.
4. If the master does not acknowledges a byte to prematurely abort a block read, the LM93 gets off the bus to allow the master to issue a STOP signal.

3.15.5.4.6 I²C Block Reads

The LM93 supports I²C block reads. The following sequence of events occur in this transaction:

1. The master sends a START to start this transaction .
2. The master send 7-bit slave address followed by a write bit (low).
3. The slave asserts an ACK.
4. The master sends the register address and the slave asserts an ACK.
5. The master sends a repeated START.
6. The master sends the 7-bit slave address followed by a read bit (high).
7. The slave asserts an ACK.
8. The master receives Data Byte 1 and asserts an ACK.
9. The master continues to receive bytes and asserting an ACK for each byte received.
10. The master receives the last byte.
11. The master asserts a NACK.
12. The master issues a STOP.

1	2		3	4		5	6		7	8		9			10	11	12
S	Slave Address	W	A	Register Address	A	S	Slave Address	R	A	Data Byte 1	A	Data Byte 2	A		Data Byte N	/A	P

Special Notes:

1. The LM93 returns 00h when address locations outside of normal address space are read.
2. Block reads do not wrap around from address FFh to 00h.
3. If the master acknowledges more bytes that it requested, the LM93 continues to supply data until the master does not acknowledge a byte.
4. If the master does not acknowledges a byte to prematurely abort a block read, the LM93 gets off the bus to allow the master to issue a STOP signal.

3.15.6 READING AND WRITING 16-BIT REGISTERS

Whenever the low byte of a 16-bit register is read, the high byte is frozen. After the high byte is read, it is unfrozen. This ensures that the entire 16-bit value is read properly and the high byte matches with the low byte. If the low byte of a different 16-bit register is read, the currently frozen high byte is unfrozen and the high byte of the new 16-bit register is frozen. In a system with two SMBus masters, it is very important that only one master reads any 16-bit registers at a time. One possible method to achieve this would involve using 16-bit SMBus reads (instead of two separate 8-bit reads) to read 16-bit registers.

Copyright © 2003–2013, Texas Instruments Incorporated

Whenever the low byte of a 16-bit register is written, the write is buffered and does not take effect until the corresponding high byte is written. If the low byte of a different 16-bit register is written, the previously buffered low byte of the first register is discarded. If a device attempts to write the high byte of a 16-bit register, and the corresponding low byte was not written (or was discarded), then the LM93 will NACK the byte.

3.16 Using The LM93

3.16.1 POWER ON

The LM93 generates a power on reset signal on $\overline{\text{RESET}}$ when power is applied for the first time to the part.

3.16.2 RESETS

Upon power up, the $\overline{\text{RESET}}$ output is asserted when the voltage on the power supply crosses the power-on-reset threshold level (see Electrical Specifications). The $\overline{\text{RESET}}$ output is open-drain and should be used with an external pull-up resistor connected to V_{DD}. Once the power on reset has completed, the $\overline{\text{RESET}}$ pin becomes an input and when asserted causes the LOCK bit in the LM93 Configuration register to be cleared. In addition, assertion of $\overline{\text{RESET}}$ causes the sleep control register to be automatically set to S4/S5. This causes several error events to be masked according to the S4/S5 masking definitions.

Register Types	Power On Reset	External Reset
Factory regs	x	
BMC Error Status regs	x	
Host Error Status regs	x	
Value regs		
Limit regs	x	
Setup regs	x	
LM93 Configuration Lock Bit	x	x
LM93 Configuration GMSK Bit	x (reset)	x (set)
Sleep Mask	x	
Sleep State Control		x
Other Mask regs	x	

All other registers are not effected by power on reset or external reset.

3.16.3 ADDRESS SELECTION

LM93 is designed to be used primarily in dual processor server systems that may require only one monitoring device.

If multiple LM93 devices are implemented in a system, they must have unique SMBus slave addresses. See the SMBUS ADDRESSING for more information.

The board designer may apply a 10 kΩ pull-down and/or pull-up resistors to ground and/or to 3.3V SB V_{DD} on the ADDR_SEL pin. The LM93 is designed to work with resistors of 5% tolerance for the case where two resistors are required. Upon the first SMBus communication to the part, the LM93 assigns itself an SMBus address according to the ADDR_SEL input.

Copyright © 2003–2013, Texas Instruments Incorporated

Address Select	Board Implementation	SMBus Address
less-than 10% of V_{DD}	Pulled to ground through a 10 kΩ resistor	0101,100b
≈ $V_{DD}/2$	10 kΩ (5%) Resistor to 3.3V SB V_{DD} and to Ground	0101,110b
greater-than 90% of V_{DD}	Pulled to 3.3V SB V_{DD} through a 10 kΩ resistor	0101,101b

3.16.4 DEVICE SETUP

BIOS executes the following steps to configure the registers in the LM93. All steps may not be necessary if default values are acceptable.

Set limits and parameters (not necessarily in this order):

- Set up Fan control
- Set up PWM temperature bindings
- Set fan tach limits
- Set fan boost temperature and hysteresis
- Set the VRD_HOT and PROCHOT PWM ramp control rate
- Enable Smart Tach Mode and Tachometer Input to PWM binding (required with direct PWM drive of fans)
- Set the temperature absolute limits
- Set the temperature hysteresis values
- Set temperature filtered or unfiltered usage
- Set the Zone Adjustment Offset temperature
- Set the PROCHOT override and time interval values
- Set the PROCHOT user limit
- Enable THERMTRIP masking of error events (if GPIO4 and GPIO5 are used as THERMTRIP inputs)
- Set voltage sensor limits and hysteresis
- Set the Dynamic Vccp offset limits
- Set the Sleep State control and mask registers
- Set Other Mask Registers (GPI Error, VRDx_HOT, SCSI_TERM, and dynamic Vccp limit checking)
- Set start bit to select user values and unmask error events
- Set the sleep state to 0
- Set Lock bit to lock the limit and parameter registers (optional)

3.16.5 ROUND ROBIN VOLTAGE/TEMPERATURE CONVERSION CYCLE

The LM93 monitoring function is started as soon as the part is powered up. The LM93 performs a “round robin” sampling of the inputs, in the order shown below. Each cycle of the round robin is completed in less than 100 ms.

The results of the sampling and conversions can be found in the value registers and are available at any time.

Channel #	Input	Typical Assignment
1	Temp Zone 1	Remote Diode 1 Temp Reading
2	Temp Zone 2	Remote Diode 2 Temp Reading
3	Temp Zone 3	Internal Temperature Reading
4	AIN1	+12V1
5	AIN2	+12V2
6	AIN3	+12V3
7	AIN4	FSB_Vtt
8	AIN5	3GIO/PXH/MCH_Core
9	AIN6	ICH_Core
10	AIN7	CPU_1Vccp
11	AIN8	CPU2_Vccp
12	AIN9	3.3V
13	AIN10	+5V
14	AIN11	SCSI_Core
15	AIN12	Mem_Core
16	AIN13	Mem_Vtt
17	AIN14	GBIT_Core
18	AIN15	−12V
19	AIN16	3.3V SB V_{DD} Supply Rail

3.16.6 ERROR STATUS REGISTERS

The LM93 contains several error status registers for the BMC side, and duplicated error status registers for the Host side. These registers are used to reflect the state of all the possible error conditions that the LM93 monitors.

The BMC/Host Error Status registers hold a set bit until the event is cleared by software, even if the condition causing the error event goes away.

To clear a bit in the Error Status registers, a ‘1’ has to be written to the specific bit that is required to be cleared. If the event that caused the error is no longer active then the bit is cleared.

Clearing a bit in a BMC Error Status register does not clear the corresponding bit in the Host Error Status register or vise versa.

3.16.6.1 ASF Mode

In order for the LM93 part to act as a legacy sensor (6.1.2 of ASF spec DSP0114 rev 2) and to easily bolt up to the SMBus of an ASF capable NIC chip, the treatment of the Error Status registers needs to change.

The LM93 can be placed into ASF mode by setting the appropriate bit in the LM93 Status/Control register. Once this bit is set, the BMC Error Status registers become read-to-clear. Writing a ‘1’ to clear a particular bit is also allowed in ASF mode. The Host Error Status registers are not effected by ASF mode.

3.16.7 MASKING, ERROR STATUS AND $\overline{\text{ALERT}}$

Masking is always applied to bits in the HOST and BMC Error Status registers. If an event is masked, the corresponding error bit in the HOST or BMC Error Status registers is prevented from ever being set. As a result, this prevents the event from ever causing $\overline{\text{ALERT}}$ to be asserted. Masking an event does not clear its associated Error Status bit if it is currently set.

Voltage errors are masked by writing a high voltage limit value of FFh. This is the default high limit for all voltages.

 Copyright © 2003–2013, Texas Instruments Incorporated

Temperature errors are masked by writing a high temperature limit value of 80h. This is the default high limit for all temperatures. Masking a temperature channel masks both temperature errors and diode fault errors.

The GPI Mask register allows GPI errors to be masked. Any bits that are set in this register mask events for the corresponding GPIO_x pin.

User $\overline{\text{PROCHOT}}$ status is not really an error but it can be used to notify the user of processor throttling past a preset USER limit. A user limit of FFh acts as the mask for this register. Error bits associated with the predefined $\overline{\text{PROCHOT}}$ thresholds cannot be masked. It is important to note though, that these error bits do not cause BMC_ERR, HOST_ERR, or $\overline{\text{ALERT}}$ to be asserted under any condition.

Fan tach errors are masked if the tach limit for the given tach is set to FFh .

$\overline{\text{SCSI_TERMx}}$ errors and $\overline{\text{VRDx_HOT}}$ errors can be masked by setting the appropriate bit in the VRD $\overline{\text{THERMTRIP}}$ and $\overline{\text{SCSI_TERM}}$ Error Mask register.

When the LM93 powers up, the $\overline{\text{ALERT}}$ output is disabled. The $\overline{\text{ALERT}}$ output can be enabled by setting the ALERT_EN bit in the LM93 Configuration register.

In addition the manual masking options, the LM93 also masks some errors depending on the sleep state of the system. The sleep state of the system is communicated to the LM93 by writing to the Sleep State Control register. Some types of error events are always masked in certain sleep modes. Some types of error events are optionally masked in certain sleep modes if their sleep mask register bit is set. Refer to the Register Descriptions for more information.

3.16.8 LAYOUT AND GROUNDING

Analog components such as voltage dividers should be physically located as close as possible to the LM93.

The LM93 bypass capacitors, the parallel combination of 100 pF, 10 µF (electrolytic or tantalum) and 0.1 µF (ceramic) bypass capacitors must be connected between power pin (pin 39) and ground, and should be located as close as possible to the LM93. The 100 pF capacitor should be placed closest to the power pin.

3.16.9 THERMAL DIODE APPLICATION

To measure temperature external to the LM93, we need to use a remote discrete diode to sense the temperature of external objects or ambient air. Remember that the temperature of a discrete diode is effected, and often dominated, by the temperature of its leads.

Most silicon diodes do not lend themselves well to this application. It is recommended that a MMBT3904 transistor type base emitter junction be used with the collector tied to the base.

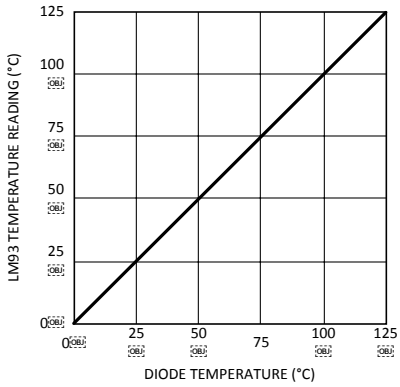

Figure 3-3. Thermal Diode Temperature vs. LM93 Temperature Reading

3.16.9.1 Accuracy Effects of Diode Non-Ideality Factor

The technique used in today's remote temperature sensors is to measure the change in V_{BE} at two different operating points of a diode. For a bias current ratio of N:1, this difference is given as:

$$\Delta V_{BE} = \eta \frac{kT}{q} \ln (N)$$

where:

- η is the non-ideality factor of the process the diode is manufactured on,
- q is the electron charge,
- k is the Boltzmann's constant,
- N is the current ratio,
- T is the absolute temperature in °K. (6)

The temperature sensor then measures ΔV_{BE} and converts to digital data. In this equation, k and q are well defined universal constants, and N is a parameter controlled by the temperature sensor. The only other parameter is η, which depends on the diode that is used for measurement. Since ΔV_{BE} is proportional to both η and T, the variations in η cannot be distinguished from variations in temperature. Since the non-ideality factor is not controlled by the temperature sensor, it directly adds to the inaccuracy of the sensor. For example, assume a ±1% variation in η from part to part (Xeon processors targeted for the LM93 do not have published thermal diode specifications at the time of this printing, therefore this is probably a very conservative estimate). Assume a temperature sensor has an accuracy specification of ±3°C at room temperature of 25°C and the process used to manufacture the diode has a non-ideality variation of ±1%. The resulting accuracy of the temperature sensor at room temperature is:

TACC = ±3°C + (±1% of 298°K) = ±6°C (7)

The additional inaccuracy in the temperature measurement caused by η, can be eliminated if each temperature sensor is calibrated with the remote diode that it is paired with. The LM93 can be paired with an MMBT3904 when not being used to monitor the thermal diode within an Intel Processor.

3.16.9.2 PCB Layout for Minimizing Noise

In the following guidelines, D+ and D− refer to the REMOTE1+, REMOTE1−, REMOTE2+, REMOTE2− pins.

In a noisy environment, such as a power supply, layout considerations are very critical. Noise induced on traces running between the remote temperature diode sensor and the LM93 can cause temperature conversion errors.

The following guidelines should be followed:

1. Place a 0.1 µF and 100 pF LM93 power bypass capacitors as close as possible to the V_{DD} pin, with the 100pF capacitor being the closest. Place 10 µF capacitor in the near vicinity of the LM93 power pin.
2. Place 100 pF capacitor as close as possible to the LM93 thermal diode Remote+ and Remote− pins. Make sure the traces to the 100 pF capacitor are matched and as short as possible. This capacitor is required to minimize high frequency noise error.
3. Ideally, the LM93 should be placed within 10 cm of the thermal diode pins with the traces being as straight, short and identical as possible. Trace resistance of 1Ω can cause as much as 1°C of error.
4. Diode traces should be surrounded by a GND guard ring to either side, above and below, if possible. This GND guard should not be between the Remote+ and Remote− lines. In the event that noise does couple to the diode lines, it would be ideal if it is coupled to both identically, i.e. common mode. That is, equally to the Remote+ (D+) and Remote−(D-) lines. (See Recommended Diode Trace Layout figure below):

 Copyright © 2003–2013, Texas Instruments Incorporated

Figure 3-4. Recommended Diode Trace Layout

5. Avoid routing diode traces in close proximity to any power supply switching or filtering inductors.
6. Avoid running diode traces close to or parallel to high speed digital and bus lines. Diode traces should be kept at least 2 cm apart from the high speed digital traces.
7. If it is necessary to cross high speed digital traces, the diode traces and the high speed digital traces should cross at a 90 degree angle.
8. Leakage current between Remote+ and GND should be kept to a minimum. 1 nA of leakage can cause as much as 1°C of error in the diode temperature reading. Keeping the printed circuit board as clean as possible minimizes leakage current.

3.16.10 FAN CONTROL

3.16.10.1 Automatic Fan Control Algorithm

The LM93 fan speed control method is optimized for fan power efficiency, fan reliability and minimum cost. The PWMx outputs can be filtered using an external switching regulator type output stage that provides 5V to 12V DC for fan power. A high PWM frequency is required to minimize the size and cost of the inductor and other components used in the output stage. The PWM outputs of the LM93 can operate up to 22.5 kHz with a step size of 6.25%.

The LM93 fan control method uses a look up table that contains 12 temperature offset settings and a base temperature. The actual duty cycle value for each step is pre-assigned. There are two possible assignments. They are dependent on the PWM output to Zone binding and the PWM output frequency. The temperature of each step is determined by the programmed offsets and zone base temperature. There are two sets of offset values, one set applies to Zone 1 and Zone 2 while the other set applies to Zone 3 and Zone 4. Each zone has an independent base temperature. A measured temperature can then be correlated to a PWM duty cycle level. Programmable temperature hysteresis is included that prevents fan speed oscillations between two steps. Each offset table has one hysteresis value assigned to it. Therefore, Zones 1 and 2 share a hysteresis value while Zones 3 and 4 share a different hysteresis value.

Shown in Figure 3-5 is a plot of one example of the transfer function of the PWM output duty cycle (%) with respect to temperature (°C) for Zone 1 - 4. Table 3-2 and Table 3-3 show the actual register values used for the plot. For this example: Zones 1 and 2 are bound to PWM1 and PWM1 is programmed to have a low frequency PWM signal; Zones 3 and 4 are bound to PWM2 and PWM2 is programmed to have a high frequency PWM signal. As can be seen in Table 3-2 and Table 3-3 the duty cycle assignments differ. Low frequency PWM output assignments have a non-linear incremental increase in the duty cycle as shown in Table 3-2 while high frequency PWM assignments have a linear incremental increase in the duty cycle as shown in Table 3-3.

To minimize the size of the LM93's lookup table structure, temperature values in the registers are programmed as an offset value of 4 bits. This offset gets added in a cumulative manner to the 8-bit base temperature. The calculated temperature is then used in the comparison that determines the PWM output duty cycle. The minimum PWM (minPWM) value sets the duty cycle when the measured temperature is less than or equal to the base temperature. All offset values that map to a PWM value less than or equal to the minPWM setting must be set to zero as shown in Table 3-2 and Table 3-3. If the offset values are not set to zero, the LM93 fan control circuitry may function unpredictably.

Copyright © 2003–2013, Texas Instruments Incorporated

Duty cycle levels may be skipped by setting their offset value to zero. As shown in Table 3-2, the 53.57% duty cycle step is skipped. When the temperature exceeds 74°C for CPU1 and 64°C for CPU2 the duty cycle changes from 50% to 57.14%.

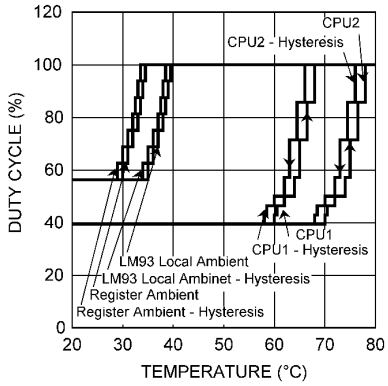

Figure 3-5. Example of the LM93 Fan Control Transfer Function.

Table 3-2. Zone 1/2 (CPU1 and CPU2) Table(1)

Lookup Table Duty Cycle	Zone 1/2 Toffset table	Tbase CPU1, Zone1	CPU1 Thermal Diode, Zone 1 (T_D)			Tbase CPU2, Zone2	CPU2 Thermal Diode, Zone 2 (T_D)		
(%)	(°C)	(°C)	(°C)		(°C)	(°C)	(°C)		(°C)
		70		T_D<	70	**60**		T_D<	60
25	**0**								
28.57	**0**								
32.14	**0**								
35.71	**0**								
39.29	**0**								
42.86	**0.5**		70	≤T_D<	70.5		60	≤T_D<	60.5
46.43	**1.5**		70.5	≤T_D<	72		60.5	≤T_D<	62
50	**2**		72	≤T_D<	74		62	≤T_D<	64
53.57	**0**								
57.14	**1**		74	≤T_D<	75		64	≤T_D<	65
71.43	**1.5**		75	≤T_D<	76.5		65	≤T_D<	66.5
85.71	**1.5**		76.5	≤T_D<	78		66.5	≤T_D<	68
100			78	≤T_D			68	≤T_D	

(1) In this example: Zones 1 and 2 are bound to the PWM1 output and the PWM1 frequency set to a value in the low range; Hysteresis is set to 2°C; Toffset and hysteresis resolution is set to 0.5°C; minPWM register set to 05h for Zones 1/2. Note, the duty cycle assignment depends on the zone to PWM output binding and the frequency setting of that PWM output.

Copyright © 2003–2013, Texas Instruments Incorporated

Table 3-3. Zone 3/4 (LM93 Ambient and External Ambient) Table(1)

Lookup Table Duty Cycle	Zone 3/4 Toffset table	Tbase LM93 Ambient	LM93 Ambient, Zone 3 (T_A)			Tbase External Ambient	External Ambient, Zone 4 (T_A)		
(%)	(°C)	(°C)	(°C)		(°C)	(°C)	(°C)		(°C)
		30		T_A<	30	**35**		T_A<	35
25	**0**								
31.25	**0**								
37.5	**0**								
43.75	**0**								
50	**0**								
56.25	**0**								
62.5	**1**		30	≤T_A<	31		35	≤T_A<	36
68.75	**1**		31	≤T_A<	32		36	≤T_A<	37
75	**1**		32	≤T_A<	33		37	≤T_A<	38
81.25	**0.5**		33	≤T_A<	33.5		38	≤T_A<	38.5
87.5	**0.5**		33.5	≤T_A<	34		38.5	≤T_A<	39
93.75	**0.5**		34	≤T_A<	34.5		39	≤T_A<	39.5
100			34.5	≤T_A			39.5	≤T_A	

(1) In this example: Zone 3 and Zone 4 are bound to the PWM 2 output and the PWM2 output frequency set to 22.5kHz; Hysteresis is set to 1°C; Toffset and hysteresis resolution set to 0.5°C; minPWM for Zones 3/4 register is set to 06h. Note, the duty cycle assignment depends on the zone to PWM output binding and the frequency setting of that PWM output.

3.16.10.2 Fan Control Temperature Resolution

As shown in the example the auto fan control algorithm can operate in a mode that allows 0.5°C of temperature resolution instead of the normal 1°C. When this mode is enabled, the temperature offset registers that make up the lookup table are interpreted differently. One LSB represents 0.5°C, and the available range between each datapoint is 0°C to 7.5°C instead of 0°C to 15°C. In addition, the hysteresis registers for auto fan control are interpreted in the same way (one LSB equals 0.5°C).

Zones 1, 2 and 3 all have 9-bits of internal resolution, which makes this feature useful. Zone 4 is written in from the SMBus and only has 8-bits of resolution. The LM93 left justifies the value into a 9-bit field before using it, if the 0.5°C mode is enabled.

Note that since zones 1 and 2 share the same lookup table, both zones must be operating in the same resolution mode. The same applies to zones 3 and 4 since they share the same lookup table.

3.16.10.3 Zone 1-4 to PWM1-2 Binding

Each zone must be bound to the PWM outputs in order to have effect on the output's duty cycle. Any combination of the zones may be used to drive a PWM output, they are not limited to the binding described in the previous example. For instance zones 1, 2 and 4 may be bound to PWM1 while zones 3 and 4 are bound to PWM2. Note that the duty cycle levels in the lookup table are dependent on the PWM output frequency assignment. Therefore, if PWM1 is assigned to a high frequency and PWM2 is assigned to a low frequency, in the binding example just mentioned, zone 4 has a different duty cycle calculated through the lookup table for PWM1 than for PWM2, even though the same Toffset values are used. This is due to the fact that PWM levels assigned to a high frequency PWM output are different than the levels assigned to a low frequency PWM output.

3.16.10.4 Fan Control Duty Cycles

Several registers in the LM93 use 4-bit values to represent a duty cycle. All of them use a common mapping that associates the 4-bit value with a duty cycle. The 4-bit values correspond also with the 14 steps of the auto fan control algorithm. The mapping is shown below. This applies for PWM outputs running at the default 22.5 kHz (high) frequency.

Copyright © 2003–2013, Texas Instruments Incorporated

4-Bit Value	Step	22.5 kHz (High Frequency) Duty Cycle
0h		0.00%
1h	1	25.00%
2h	2	31.25%
3h	3	37.50%
4h	4	43.75%
5h	5	50.00%
6h	6	56.25%
7h	7	62.50%
8h	8	68.75%
9h	9	75.00%
Ah	10	81.25%
Bh	11	87.50%
Ch	12	93.75%
Dh	13	100.00%
Eh	—	Reserved
Fh	—	Reserved

3.16.10.5 Alternate PWM Frequencies

The PWM output can operate at lower frequencies, instead of the default 22.5 kHz. The alternate lower frequencies can be enabled through the PWMx Control 4 registers. When operating in the lower frequency mode, the mapping between step numbers and duty cycles changes. This effects the auto fan control and all LM93 registers that describe a duty cycle using a 4-bit value.

The low frequency PWM output duty cycle mapping is listed in the following table:

4-Bit Value	Step	Low Frequencies Duty Cycle
0h		0%
1h	1	25.00%
2h	2	28.57%
3h	3	32.14%
4h	4	35.71%
5h	5	39.29%
6h	6	42.86%
7h	7	46.43%
8h	8	50.00%
9h	9	53.57%
Ah	10	57.14%
Bh	11	71.43%
Ch	12	85.71%
Dh	13	100.00%
Eh	—	Reserved
Fh	—	Reserved

Copyright © 2003–2013, Texas Instruments Incorporated

3.16.10.6 Fan Control Priorities

The automatic fan control is not the only function that influences PWM duty cycle. There are several other functions that influence the PWM duty cycle. All the functions can be classified into several categories:

Category #	Category Name
1	PWM to 100% conditions
2	$\overline{\text{VRDx_HOT}}$ ramp-up/ramp-down
3	$\overline{\text{PROCHOT}}$ ramp-up/ramp-down function
4	Manual PWM Override
5	Fan Spin-Up Control
6	Automatic Fan Control Algorithm

The ultimate PWM duty cycle that is chosen can be described by the following formula:

If (Manual PWM Override is active)

PWM = max(1,2,3,4)

Else

PWM = max(1,2,3,5,6)

So in general, categories 1, 2 and 3 are always active. In addition to that, either category 4 or categories 5 and 6 are active depending on whether manual override is enabled. In this sense the manual override, when enabled, replaces category 5 and 6.

3.16.10.7 PWM to 100% Conditions

There are several conditions that cause the duty cycles of all PWM outputs to immediately get set to 100%. They are:

1. Any of the four temperature zones has exceeded the programmed Fan Boost Limit setting but has not yet cooled down enough to drop below the hysteresis point.
2. The OVRID bit is set in the LM93 Status/Control.

3.16.10.8 $\overline{\text{VRDx_HOT}}$ Ramp-Up/Ramp-Down

This function causes the duty cycle of the PWM outputs to gradually increase over time if $\overline{\text{VRD1_HOT}}$ or $\overline{\text{VRD2_HOT}}$ are asserted.

When $\overline{\text{VRDx_HOT}}$ is asserted, the ramp function is enabled. The enabling process involves two steps:

1. The current duty cycle being requested by other PWM functions is memorized.
2. The ramp function immediately adds one PWM duty cycle step to the memorized value and requests this duty cycle.

Once the function is enabled, it gradually adds additional duty cycle steps every X milliseconds whenever $\overline{\text{VRDx_HOT}}$ is asserted (X is programmable via the PWM Ramp Control register). If $\overline{\text{VRDx_HOT}}$ remains asserted for a long enough time, the duty cycle eventually reaches 100%.

Whenever $\overline{\text{VRDx_HOT}}$ is de-asserted, the ramp function begins to ramp down by subtracting one PWM duty cycle step every X milliseconds. If $\overline{\text{VRDx_HOT}}$ is currently de-asserted, and the ramp function is less than to the PWM duty cycle being requested by other functions, the ramp function is disabled.

As long as the function is enabled, it continues to ramp up or ramp down depending on the state of $\overline{\text{VRDx_HOT}}$. The ramp enabling process described above can only re-occur after the ramp function has been disabled. Rapid assertion/de-assertion of $\overline{\text{VRDx_HOT}}$ does not trigger the enabling process unless $\overline{\text{VRDx_HOT}}$ was de-asserted long enough for the ramp function to disable itself.

Copyright © 2003–2013, Texas Instruments Incorporated

This ramp function operates independently for $\overline{\text{VRD1_HOT}}$ and $\overline{\text{VRD2_HOT}}$. In addition, the ramp function only applies to the PWM(s) that are bound to one or two $\overline{\text{VRDx_HOT}}$ inputs. Depending on the bindings, it is possible that up to four independent ramp functions are active at any given moment:

PWM1/VRD1

PWM1/VRD2

PWM2/VRD1

PWM2/VRD2

If a PWM is bound to both $\overline{\text{VRD1_HOT}}$ and $\overline{\text{VRD2_HOT}}$, then two ramp functions are active for that PWM output. In this case the duty cycle that is used is the maximum of the two ramp functions.

3.16.10.9 $\overline{\text{PROCHOT}}$ Ramp-Up/Ramp-Down

This function is very similar to the $\overline{\text{VRDx_HOT}}$ ramp-up/ramp-down function. The PWM duty cycle ramps up in the same fashion whenever the $\overline{\text{PROCHOT}}$ measurement exceeds the user programmed threshold. Once a new $\overline{\text{PROCHOT}}$ measurement is made that no longer exceeds the user limit, the PWM will begin to ramp down.

Just as with the $\overline{\text{VRDx_HOT}}$ ramp function, the $\overline{\text{PROCHOT}}$ ramp function uses independent bindings to determine which PWM outputs should be effected by each $\overline{\text{PROCHOT}}$ input ($\overline{\text{P1_PROCHOT}}$ or $\overline{\text{P2_PROCHOT}}$).

If a PWM is bound to both $\overline{\text{P1_PROCHOT}}$ and $\overline{\text{P2_PROCHOT}}$, two $\overline{\text{PROCHOT}}$ ramp functions could be active at the same time. In this case the duty cycle that is used is the maximum of the two ramp functions.

3.16.10.10 Manual PWM Override

When a PWM channel is configured for manual PWM override, software can manually control the PWM duty cycle. There are some PWM control functions that could still cause the duty cycle to be higher than the manual setting. See the Fan Control Priorities for details.

3.16.10.11 Fan Spin-Up Control

All of the other PWM control functions are combined to produce a final duty cycle that is actually used for the PWM output. If this final value changes from zero to a non-zero value, the Fan Spin-Up Control function is triggered. Once triggered, the Fan Spin-Up Control requests the programmed duty cycle for a programmed period of time.

3.16.11 XOR TREE TEST

An XOR tree is provided in the LM93 for Automated Test Equipment (ATE) board level connectivity testing. This allows the functionality of all digital inputs to be tested in a simple manner and any pins that are non-functional or shorted together to be identified. When the test mode is enabled by setting the 'XEN' bit in the XOR Test register, the part enters XOR test mode.

The following signals are included in the XOR test tree:

Px_VIDy	GPIO_x	PWMx	$\overline{\text{Px_PROCHOT}}$	$\overline{\text{VRDx_HOT}}$	$\overline{\text{SCSI_TERMx}}$	$\overline{\text{RESET}}$

Copyright © 2003–2013, Texas Instruments Incorporated

Since the test mode is XOR tree, the order of the signals in the tree is not important. SMBDAT and SMBCLK should not be included in the test tree.

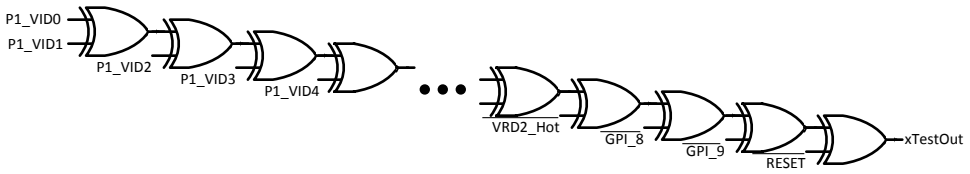

Figure 3-6. Example of XOR Test Tree (not showing all signals)

To properly implement the XOR TREE test on the PCB, no pins listed in the tree should be connected directly to power or ground. If a pin needs to be configured as a permanent low, such as an address, it should be connected to ground through a low value resister such as 10 kΩ, to allow the ATE (Automatic Test Equipment) to drive it high.

When generating test waveforms, a typical propagation delay of 500 ns through the XOR tree should be allowed for.

3.17 Registers

3.17.1 REGISTER WARNINGS

In most cases, reserved registers and register bits return zero when read. This should not be relied upon, since reserved registers can be used for future expansion of the LM93 functions.

Some registers have "N/D" for their default value. This means that the power-up default of the register is not defined. In the case of value registers, care should be taken to ensure that software does not read a value register until the associated measurement function has acquired a measurement. This applies to temperatures, voltages, fan RPM, and $\overline{\text{PROCHOT}}$ monitoring. In the case of other registers, such as fan control settings, N/D means that software must initialize these registers to ensure they have a known value before setting the START bit in the LM93 Configuration register.

3.17.2 REGISTER SUMMARY TABLE

Table 3-4. Register Key

Term	Description
N/D	Not Defined
N/A	Not Applicable
R	Read Only
R/W	Read or Write
RWC	Read or Write to Clear

Lock	Register Name	Address	Default	Description
FACTORY REGISTERS				
x	XOR Test	00h	00h	Used to set the XOR test tree mode
	SMBus Test	01h	N/D	SMBus read/write test register
	Reserved	02h-3Dh	N/D	
	Manufacturer ID	3Eh	01h	Contains manufacturer ID code
	Version/Stepping	3Fh	73h	Contains code for major and minor revisions
BMC ERROR STATUS REGISTERS				
	B_Error Status 1	40h	00h	BMC error status register 1
	B_Error Status 2	41h	00h	BMC error register 2
	B_Error Status 3	42h	00h	BMC error register 3
	B_Error Status 4	43h	00h	BMC error register 4
	B_P1_PROCHOT Error Status	44h	00h	BMC error register for $\overline{\text{P1_PROCHOT}}$
	B_P2_PROCHOT Error Status	45h	00h	BMC error register for $\overline{\text{P2_PROCHOT}}$
	B_GPI Error Status	46h	00h	BMC error register for GPIs
	B_Fan Error Status	47h	00h	BMC error register for Fans
HOST ERROR STATUS REGISTERS				
	H_Error Status 1	48h	00h	HOST error status register 1
	H_Error Status 2	49h	00h	HOST error register 2
	H_Error Status 3	4Ah	00h	HOST error register 3
	H_Error Status 4	4Bh	00h	HOST error register 4
	H_P1_PROCHOT Error Status	4Ch	00h	HOST error register for $\overline{\text{P1_PROCHOT}}$
	H_P2_PROCHOT Error Status	4Dh	00h	HOST error register for $\overline{\text{P2_PROCHOT}}$
	H_GPI Error Status	4Eh	00h	HOST error register for GPIs
	H_Fan Error Status	4Fh	00h	HOST error register for Fans

Copyright © 2003–2013, Texas Instruments Incorporated

Lock	Register Name	Address	Default	Description
VALUE REGISTERS				
	Zone 1 (CPU1) Temp	50h	N/D	Measured value of remote thermal diode temperature channel 1
	Zone 2 (CPU2) Temp	51h	N/D	Measured value of remote thermal diode temperature channel 2
	Zone 3 (Internal) Temp	52h	N/D	Measured temperature from on-chip sensor
	Zone 4 (External Digital) Temp	53h	N/D	Measured temperature from external temperature sensor
	Zone 1 (CPU1) Filtered Temp	54h	00h	Filtered value of remote thermal diode temperature channel 1
	Zone 2 (CPU2) Filtered Temp	55h	00h	Filtered value of remote thermal diode temperature channel 2
	AD_IN1 Voltage	56h	N/D	Measured value of AD_IN1
	AD_IN2 Voltage	57h	N/D	Measured value of AD_IN2
	AD_IN3 Voltage	58h	N/D	Measured value of AD_IN3
	AD_IN4 Voltage	59h	N/D	Measured value of AD_IN4
	AD_IN5 Voltage	5Ah	N/D	Measured value of AD_IN5
	AD_IN6 Voltage	5Bh	N/D	Measured value of AD_IN6
	AD_IN7 Voltage	5Ch	N/D	Measured value of AD_IN7
	AD_IN8 Voltage	5Dh	N/D	Measured value of AD_IN8
	AD_IN9 Voltage	5Eh	N/D	Measured value of AD_IN9
	AD_IN10 Voltage	5Fh	N/D	Measured value of AD_IN10
	AD_IN11 Voltage	60h	N/D	Measured value of AD_IN11
	AD_IN12 Voltage	61h	N/D	Measured value of AD_IN12
	AD_IN13 Voltage	62h	N/D	Measured value of AD_IN13
	AD_IN14 Voltage	63h	N/D	Measured value of AD_IN14
	AD_IN15 Voltage	64h	N/D	Measured value of AD_IN15
	AD_IN16 Voltage	65h	N/D	Measured value of AD_IN16 (V_{DD} 3.3V S/B)
	Reserved	66h	N/D	
	Current $\overline{\text{P1_PROCHOT}}$	67h	00h	Measured $\overline{\text{P1_PROCHOT}}$ throttle percentage
	Average $\overline{\text{P1_PROCHOT}}$	68h	N/D	Average $\overline{\text{P1_PROCHOT}}$ throttle percentage
	Current $\overline{\text{P2_PROCHOT}}$	69h	00h	Measured $\overline{\text{P2_PROCHOT}}$ throttle percentage
	Average $\overline{\text{P2_PROCHOT}}$	6Ah	N/D	Average $\overline{\text{P2_PROCHOT}}$ throttle percentage
	GPI State	6Bh	N/D	Current GPIO state
	P1_VID	6Ch	N/D	Current 6-bit VID value of Processor 1
	P2_VID	6Dh	N/D	Current 6-bit VID value of Processor 2
	FAN Tach 1 LSB	6Eh	N/D	Measured FAN Tach 1 LSB
	FAN Tach 1 MSB	6Fh	N/D	Measured FAN Tach 1 MSB
	FAN Tach 2 LSB	70h	N/D	Measured FAN Tach 2 LSB
	FAN Tach 2 MSB	71h	N/D	Measured FAN Tach 2 MSB
	FAN Tach 3 LSB	72h	N/D	Measured FAN Tach 3 LSB
	FAN Tach 3 MSB	73h	N/D	Measured FAN Tach 3 MSB
	FAN Tach 4 LSB	74h	N/D	Measured FAN Tach 4 LSB
	FAN Tach 4 MSB	75h	N/D	Measured FAN Tach 4 MSB
	Reserved	76h-77h	N/D	
LIMIT REGISTERS				
	Zone 1 (CPU1) Low Temp	78h	80h	Low limit for external thermal diode temperature channel 1 (D1) measurement
	Zone 1 (CPU1) High Temp	79h	80h	High limit for external thermal diode temperature channel 1 (D1) measurement
	Zone 2 (CPU2) Low Temp	7Ah	80h	Low limit for external thermal diode temperature channel 2 (D2) measurement
	Zone 2 (CPU2) High Temp	7Bh	80h	High limit for external thermal diode temperature channel 2 (D2) measurement
	Zone 3 (Internal) Low Temp	7Ch	80h	Low limit for local temperature measurement

Copyright © 2003–2013, Texas Instruments Incorporated

Lock	Register Name	Address	Default	Description
	Zone 3 (Internal) High Temp	7Dh	80h	High limit for local temperature measurement
	Zone 4 (External Digital) Low Temp	7Eh	80h	Low limit for external digital temperature sensor
	Zone 4 (External Digital) High Temp	7Fh	80h	High limit for external digital temperature sensor
x	Fan Boost Temp Zone 1	80h	3Ch	Zone 1 (CPU1) fan boost temperature
x	Fan Boost Temp Zone 2	81h	3Ch	Zone 2 (CPU2) fan boost temperature
x	Fan Boost Temp Zone 3	82h	23h	Zone 3 (Internal) fan boost temperature
x	Fan Boost Temp Zone 4	83h	23h	Zone 4 (External Digital) fan boost temperature
	Reserved	84h-8Fh	N/D	
	AD_IN1 Low Limit	90h	00h	Low limit for analog input 1 measurement
	AD_IN1 High Limit	91h	FFh	High limit for analog input 1 measurement
	AD_IN2 Low Limit	92h	00h	Low limit for analog input 2 measurement
	AD_IN2 High Limit	93h	FFh	High limit for analog input 2 measurement
	AD_IN3 Low Limit	94h	00h	Low limit for analog input 3 measurement
	AD_IN3 High Limit	95h	FFh	High limit for analog input 3 measurement
	AD_IN4 Low Limit	96h	00h	Low limit for analog input 4 measurement
	AD_IN4 High Limit	97h	FFh	High limit for analog input 4 measurement
	AD_IN5 Low Limit	98h	00h	Low limit for analog input 5 measurement
	AD_IN5 High Limit	99h	FFh	High limit for analog input 5 measurement
	AD_IN6 Low Limit	9Ah	00h	Low limit for analog input 6 measurement
	AD_IN6 High Limit	9Bh	FFh	High limit for analog input 6 measurement
	AD_IN7 Low Limit	9Ch	00h	Low limit for analog input 7 measurement
	AD_IN7 High Limit	9Dh	FFh	High limit for analog input 7 measurement
	AD_IN8 Low Limit	9Eh	00h	Low limit for analog input 8 measurement
	AD_IN8 High Limit	9Fh	FFh	High limit for analog input 8 measurement
	AD_IN9 Low Limit	A0h	00h	Low limit for analog input 9 measurement
	AD_IN9 High Limit	A1h	FFh	High limit for analog input 9 measurement
	AD_IN10 Low Limit	A2h	00h	Low limit for analog input 10 measurement
	AD_IN10 High Limit	A3h	FFh	High limit for analog input 10 measurement
	AD_IN11 Low Limit	A4h	00h	Low limit for analog input 11 measurement
	AD_IN11 High Limit	A5h	FFh	High limit for analog input 11 measurement
	AD_IN12 Low Limit	A6h	00h	Low limit for analog input 12 measurement
	AD_IN12 High Limit	A7h	FFh	High limit for analog input 12 measurement
	AD_IN13 Low Limit	A8h	00h	Low limit for analog input 13 measurement
	AD_IN13 High Limit	A9h	FFh	High limit for analog input 13 measurement
	AD_IN14 Low Limit	AAh	00h	Low limit for analog input 14 measurement
	AD_IN14 High Limit	ABh	FFh	High limit for analog input 14 measurement
	AD_IN15 Low Limit	ACh	00h	Low limit for analog input 15 measurement
	AD_IN15 High Limit	ADh	FFh	High limit for analog input 15 measurement
	AD_IN16 Low Limit	AEh	00h	Low limit for analog input 16 measurement
	AD_IN16 High Limit	AFh	FFh	High limit for analog input 16 measurement
	$\overline{\text{P1_PROCHOT}}$ User Limit	B0h	FFh	User settable limit for $\overline{\text{P1_PROCHOT}}$
	$\overline{\text{P2_PROCHOT}}$ User Limit	B1h	FFh	User settable limit for $\overline{\text{P2_PROCHOT}}$
	Vccp1 Limit Offsets	B2h	17h	VID offset values for window comparator for CPU1 Vccp (AD_IN7)
	Vccp2 Limit Offsets	B3h	17h	VID offset values for window comparator for CPU2 Vccp (AD_IN8)
	FAN Tach 1 Limit LSB	B4h	FCh	FAN Tach 1 Limit LSB
	FAN Tach 1 Limit MSB	B5h	FFh	FAN Tach 1 Limit MSB
	FAN Tach 2 Limit LSB	B6h	FCh	FAN Tach 2 Limit LSB
	FAN Tach 2 Limit MSB	B7h	FFh	FAN Tach 2 Limit MSB
	FAN Tach 3 Limit LSB	B8h	FCh	FAN Tach 3 Limit LSB

Copyright © 2003–2013, Texas Instruments Incorporated

Lock	Register Name	Address	Default	Description
	FAN Tach 3 Limit MSB	B9h	FFh	FAN Tach 3 Limit MSB
	FAN Tach 4 Limit LSB	BAh	FCh	FAN Tach 4 Limit LSB
	FAN Tach 4 Limit MSB	BBh	FFh	FAN Tach 4 Limit MSB
SETUP REGISTERS				
x	Special Function Control 1	BCh	00h	Controls the hysteresis for voltage limit comparisons. Also selects filtered or unfiltered temperature usage for temperature limit comparisons and fan control.
x	Special Function Control 2	BDh	00h	Enables smart tach detection. Also selects 0.5°C or 1.0°C resolution for fan control.
x	GPI / VID Level Control	BEh	00h	Control the input threshold levels for the P1_VIDx, P2_VIDx and GPIO_x inputs.
x	PWM Ramp Control	BFh	00h	Controls the ramp rate of the PWM duty cycle when $\overline{\text{VRDx_HOT}}$ is asserted, as well as the ramp rate when $\overline{\text{PROCHOT}}$ exceeds the user threshold.
x	Fan Boost Hysteresis (Zones 1/2)	C0h	44h	Fan Boost Hysteresis for zones 1 and 2
x	Fan Boost Hysteresis (Zones 3/4)	C1h	44h	Fan Boost Hysteresis for zones 3 and 4
x	Zones 1/2 Spike Smoothing Control	C2h	00h	Configures Spike Smoothing for zones 1 and 2
x	Zones 1/2 MinPWM and Hysteresis	C3h	N/D	Controls MinPWM and hysteresis setting for zones 1 and 2 auto-fan control
x	Zones 3/4 MinPWM and Hysteresis	C4h	N/D	Controls MinPWM and hysteresis setting for zones 3 and 4 auto-fan control
	GPO	C5h	00h	Controls the output state of the GPIO pins
	$\overline{\text{PROCHOT}}$ Override	C6h	00h	Allows manual assertion of $\overline{\text{P1_PROCHOT}}$ or $\overline{\text{P2_PROCHOT}}$
	$\overline{\text{PROCHOT}}$ Time Interval	C7h	11h	Configures the time window over which the $\overline{\text{PROCHOT}}$ inputs are measured
x	PWM1 Control 1	C8h	0Fh	Controls PWM control source bindings.
x	PWM1 Control 2	C9h	00h	Controls PWM override and output polarity
x	PWM1 Control 3	CAh	00h	Controls PWM spin-up duration and duty cycle
x	PWM1 Control 4	CBh	00h	Frequency control for PWM1.
x	PWM2 Control 1	CCh	0Fh	Controls PWM control source bindings.
x	PWM2 Control 2	CDh	00h	Controls PWM override and output polarity
x	PWM2 Control 3	CEh	00h	Controls PWM spin-up duration and duty cycle
x	Special FunctionPWM2 Control 4	CFh	00h	Frequency control for PWM2
x	Zone 1 Base Temperature	D0h	N/D	Base temperature to which look-up table offset is applied for Zone 1
x	Zone 2 Base Temperature	D1h	N/D	Base temperature to which look-up table offset is applied for Zone 2
x	Zone 3 Base Temperature	D2h	N/D	Base temperature to which look-up table offset is applied for Zone 3
x	Zone 4 Base Temperature	D3h	N/D	Base temperature to which look-up table offset is applied for Zone 4
x	Step 2 Temp Offset	D4h	N/D	Step 2 Zone 1/2 and Zone 3/4 Offset Temperatures
x	Step 3 Temp Offset	D5h	N/D	Step 3 Zone 1/2 and Zone 3/4 Offset Temperatures
x	Step 4 Temp Offset	D6h	N/D	Step 4 Zone 1/2 and Zone 3/4 Offset Temperatures
x	Step 5 Temp Offset	D7h	N/D	Step 5 Zone 1/2 and Zone 3/4 Offset Temperatures
x	Step 6 Temp Offset	D8h	N/D	Step 6 Zone 1/2 and Zone 3/4 Offset Temperatures
x	Step 7 Temp Offset	D9h	N/D	Step 7 Zone 1/2 and Zone 3/4 Offset Temperatures
x	Step 8 Temp Offset	DAh	N/D	Step 8 Zone 1/2 and Zone 3/4 Offset Temperatures
x	Step 9 Temp Offset	DBh	N/D	Step 9 Zone 1/2 and Zone 3/4 Offset Temperatures
x	Step 10 Temp Offset	DCh	N/D	Step 10 Zone 1/2 and Zone 3/4 Offset Temperatures
x	Step 11 Temp Offset	DDh	N/D	Step 11 Zone 1/2 and Zone 3/4 Offset Temperatures
x	Step 12 Temp Offset	DEh	N/D	Step 12 Zone 1/2 and Zone 3/4 Offset Temperatures
x	Step 13 Temp Offset	DFh	N/D	Step 13 Zone 1/2 and Zone 3/4 Offset Temperatures
x	Special Function TACH to PWM Binding	E0h	00h	Controls the tachometer input to PWM output binding
	Reserved	E1	N/D	

Copyright © 2003–2013, Texas Instruments Incorporated

Lock	Register Name	Address	Default	Description
x	LM93 Status/Control	E2h	00h	Gives Master error status, ASF reset control and Max PWM control
x	LM93 Configuration	E3h	00h	Configures various outputs and provides START bit
SLEEP STATE CONTROL AND MASK REGISTERS				
	Sleep State Control	E4h	03h	Used to communicate the system sleep state to the LM93
	S1 GPI Mask	E5h	FFh	Sleep state S1 GPI error mask register
	S1 Fan Mask	E6h	0Fh	Sleep state S1 fan tach error mask register
	S3 GPI Mask	E7h	FFh	Sleep state S3 GPI error mask register
	S3 Fan Mask	E8h	0Fh	Sleep state S3 fan tach error mask register
	S3 Temperature/Voltage Mask	E9h	07h	Sleep state S3 temperature or voltage error mask register
	S4/5 GPI Mask	EAh	FFh	Sleep state S4/5 GPI error mask register
	S4/5 Temperature/Voltage Mask	EBh	07h	Sleep state S4/5 temperature or voltage error mask register
OTHER MASK REGISTERS				
	GPI Error Mask	ECh	FFh	Error mask register for GPI faults
	Miscellaneous Error Mask	EDh	3Fh	Error mask register for $\overline{\text{VRDx_HOT}}$, $\overline{\text{SCSI_TERMx}}$, and dynamic Vccp limit checking.
ZONE 1 AND 2 TEMPERATURE READING OFFSET REGISTERS				
x	Special Function Zone 1 Adjustment Offset	EEh	00h	Allows all Zone 1 temperature measurements to be adjusted by a programmable offset
x	Special Function Zone 2 Adjustment Offset	EFh	00h	Allows all Zone 2 temperature measurements to be adjusted by a programmable offset
BLOCK COMMANDS				
	Block Write Command	F0h	N/A	SMBus Block Write Command Code
	Block Read Command	F1h	N/A	SMBus Block Write/Read Process call
	Fixed Block 0	F2h	N/A	Fixed block code address 40h, size 8 bytes
	Fixed Block 1	F3h	N/A	Fixed block code address 48h, size 8 bytes
	Fixed Block 2	F4h	N/A	Fixed block code address 50h, size 6 bytes
	Fixed Block 3	F5h	N/A	Fixed block code address 56h, size 16 bytes
	Fixed Block 4	F6h	N/A	Fixed block code address 67h, size 4 bytes
	Fixed Block 5	F7h	N/A	Fixed block code address 6Eh, size 8 bytes
	Fixed Block 6	F8h	N/A	Fixed block code address 78h, size 12 bytes
	Fixed Block 7	F9h	N/A	Fixed block code address 90h, size 32 bytes
	Fixed Block 8	FAh	N/A	Fixed block code address B4h, size 8 bytes
	Fixed Block 9	FBh	N/A	Fixed block code address C8h, size 8 bytes
	Fixed Block 10	FCh	N/A	Fixed block code address D0h, size 16 bytes
	Fixed Block 11	FDh	N/A	Fixed block code address E5h, size 9 bytes
	Reserved	FEh-FFh	N/A	Reserved for future commands

3.17.3 FACTORY REGISTERS 00h–3Fh

3.17.3.1 Register 00h XOR Test

Register Address	Read/ Write	Register Name	Bit 7	Bit 6	Bit 5	Bit 4	Bit 3	Bit 2	Bit 1	Bit 0	Default Value
00h	R/W	XOR Test	RES							XEN	00h

Bit	Name	R/W	Default	Description	Sleep Masking
0	XEN	R/W	0	The LM93 incorporates an XOR tree test mode. When the test mode is enabled by setting this bit, the part enters XOR test mode. Clearing this bit brings the part out of XOR test mode.	N/A
7:1	RES	R	0	Reserved	N/A

Copyright © 2003–2013, Texas Instruments Incorporated

The reserved bits of this register should only be used by the manufacturer for testing of the ASIC.

3.17.3.2 Register 01h SMBus Test

Register Address	Read/ Write	Register Name	Bit 7	Bit 6	Bit 5	Bit 4	Bit 3	Bit 2	Bit 1	Bit 0	Default Value
01h	R/W	SMBus Test	7	6	5	4	3	2	1	0	N/D

This register can be used to verify that the SMBus can read and write to the device without effecting any programmed settings.

3.17.3.3 Register 3Eh Manufacturer ID

Register Address	Read/ Write	Register Name	Bit 7	Bit 6	Bit 5	Bit 4	Bit 3	Bit 2	Bit 1	Bit 0	Default Value
3Eh	R	Manufactur ID	0	0	0	0	0	0	0	0	01h

The Manufacturer ID register contains the manufacturer identification number. This number is assigned by Texas Instruments and is a method for uniquely identifying the part manufacturer.

3.17.3.4 Register 3Fh Version/Stepping

Register Address	Read/ Write	Register Name	Bit 7	Bit 6	Bit 5	Bit 4	Bit 3	Bit 2	Bit 1	Bit 0	Default Value
3Fh	R	Version/Stepping	VER[3:0]				STP[3:0]				73h
			0	1	1	1	0	0	1	1	

The four least significant bits of the Version/Stepping register [3:0] contain the current stepping of the LM93 silicon. The four most significant bits [7:4] reflect the LM93 version number. The LM93 has a fixed version number of 0111b. For the first stepping of LM93, this register reads 01110000b. For the second stepping of the LM93, this register reads 01110001b and so on. It is incrementaly increased for future versions for the silicon. The final released silicon has a stepping of 3h therefore this register reads 73h.

The register is used by application software to identify which device in the family of hardware monitoring ASICs has been implemented in the given system. Based on this information, software can determine which registers to read from and write to. Application software may use the current stepping to implement work-a-rounds for bugs found in a specific silicon stepping.

3.17.4 BMC ERROR STATUS REGISTERS 40h–47h

The B_Error Status Registers contain several bits that each represent a particular error event that the LM93 can monitor. The LM93 sets a given bit whenever the corresponding error event occurs. The BMC_ERR bit in the LM93 Status/Control register is also set if any bit in the BMC Error Status registers is set. If enabled, $\overline{\text{ALERT}}$ is also asserted anytime BMC_ERR is set. The exception to this is the fixed threshold error status bits in the $\overline{\text{PROCHOT}}$ Error Status registers. They have no influence on BMC_ERR or $\overline{\text{ALERT}}$.

Once a bit is set in the BMC Error Status registers, it is not automatically cleared by the LM93 if the error event goes away. Each bit must be cleared by software. If software attempts to clear a bit while the error condition still exists, and the error is unmasked, the bit does not clear. If the error is masked, the bit can be cleared even if the error condition still exists.

If the LM93 is in ASF mode, the BMC Error Status registers are both read-to-clear and write-one-to-clear. When not in ASF mode, the registers are only write-one-to-clear.

Each register described in this section has a column labeled **Sleep Masking**. This column describes which error events are masked in various sleep states. The sleep state of the system is communicated to the LM93 by writing to the Sleep State Control register. If a sleep state in this column has a '*' next to it, it denotes that the error event is optionally masked in that sleep mode, depending on the Sleep State Mask registers.

3.17.4.1 Register 40h B_Error Status 1

Register Address	Read/ Write	Register Name	Bit 7	Bit 6	Bit 5	Bit 4	Bit 3	Bit 2	Bit 1	Bit 0	Default Value
40h	RWC	B_Error Status 1	RES		VRD2 _ERR	VRD1 _ERR	ZN4_ ERR	ZN3_ ERR	ZN2_ ERR	ZN1_ ERR	00h

Bit	Name	R/W	Description	Sleep Masking
0	ZN1_ERR	RWC	This bit is set when the zone 1 temperature has fallen outside the zone 1 temperature limits.	S3*, S4/5*
1	ZN2_ERR	RWC	This bit is set when the zone 2 temperature has fallen outside the zone 2 temperature limits.	S3*, S4/5*
2	ZN3_ERR	RWC	This bit is set when the zone 3 temperature has fallen outside the zone 3 temperature limits.	none
3	ZN4_ERR	RWC	This bit is set when the zone 4 temperature has fallen outside the zone 4 temperature limits.	none
4	VRD1_ERR	RWC	This bit is set when the $\overline{\text{VRD1_HOT}}$ input has been asserted.	S3, S4/5
5	VRD2_ERR	RWC	This bit is set when the $\overline{\text{VRD2_HOT}}$# input has been asserted.	S3, S4/5
7:6	RES	R	Reserved	N/A

3.17.4.2 Register 41h B_Error Status 2

Register Address	Read/ Write	Register Name	Bit 7	Bit 6	Bit 5	Bit 4	Bit 3	Bit 2	Bit 1	Bit 0	Default Value
41h	RWC	B_Error Status 2	ADIN8 _ERR	ADIN7 _ERR	ADIN6 _ERR	ADIN5 _ERR	ADIN4 _ERR	ADIN3 _ERR	ADIN2 _ERR	ADIN1 _ERR	00h

Bit	Name	R/W	Description	Sleep Masking
0	AD1_ERR	RWC	This bit is set when the AD_IN1 voltage has fallen outside the range defined by the AD_IN1 Low Limit and the AD_IN1 High Limit registers.	S3, S4/5
1	AD2_ERR	RWC	This bit is set when the AD_IN2 voltage has fallen outside the range defined by the AD_IN2 Low Limit and the AD_IN2 High Limit registers.	S3, S4/5
2	AD3_ERR	RWC	This bit is set when the AD_IN3 voltage has fallen outside the range defined by the AD_IN3 Low Limit and the AD_IN3 High Limit registers.	S3, S4/5
3	AD4_ERR	RWC	This bit is set when the AD_IN4 voltage has fallen outside the range defined by the AD_IN4 Low Limit and the AD_IN4 High Limit registers.	S3, S4/5
4	AD5_ERR	RWC	This bit is set when the AD_IN5 voltage has fallen outside the range defined by the AD_IN5 Low Limit and the AD_IN5 High Limit registers.	S3, S4/5
5	AD6_ERR	RWC	This bit is set when the AD_IN6 voltage has fallen outside the range defined by the AD_IN6 Low Limit and the AD_IN6 High Limit registers.	S3, S4/5
6	AD7_ERR	RWC	This bit is set when the AD_IN7 voltage has fallen outside the range defined by the AD_IN7 Low Limit and the AD_IN7 High Limit registers.	S3, S4/5
7	AD8_ERR	RWC	This bit is set when the AD_IN8 voltage has fallen outside the range defined by the AD_IN8 Low Limit and the AD_IN8 High Limit registers.	S3, S4/5

3.17.4.3 Register 42h B_Error Status 3

Register Address	Read/ Write	Register Name	Bit 7	Bit 6	Bit 5	Bit 4	Bit 3	Bit 2	Bit 1	Bit 0	Default Value
42h	RWC	B_Error Status 3	ADIN16 _ERR	ADIN15 _ERR	ADIN14 _ERR	ADIN13 _ERR	ADIN12 _ERR	ADIN11 _ERR	ADIN10 _ERR	ADIN9 _ERR	00h

Bit	Name	R/W	Description	Sleep Masking
0	AD9_ERR	RWC	This bit is set when the AD_IN9 voltage has fallen outside the range defined by the AD_IN9 Low Limit and the AD_IN9 High Limit registers.	S3, S4/5
1	AD10_ERR	RWC	This bit is set when the AD_IN10 voltage has fallen outside the range defined by the AD_IN10 Low Limit and the AD_IN10 High Limit registers.	S3, S4/5
2	AD11_ERR	RWC	This bit is set when the AD_IN11 voltage has fallen outside the range defined by the AD_IN11 Low Limit and the AD_IN11 High Limit registers.	S3, S4/5

Copyright © 2003–2013, Texas Instruments Incorporated

Bit	Name	R/W	Description	Sleep Masking
3	AD12_ERR	RWC	This bit is set when the AD_IN12 voltage has fallen outside the range defined by the AD_IN12 Low Limit and the AD_IN12 High Limit registers.	S3*, S4/5*
4	AD13_ERR	RWC	This bit is set when the AD_IN13 voltage has fallen outside the range defined by the AD_IN13 Low Limit and the AD_IN13 High Limit registers.	S3*, S4/5*
5	AD14_ERR	RWC	This bit is set when the AD_IN14 voltage has fallen outside the range defined by the AD_IN14 Low Limit and the AD_IN14 High Limit registers.	S3*, S4/5*
6	AD15_ERR	RWC	This bit is set when the AD_IN15 voltage has fallen outside the range defined by the AD_IN15 Low Limit and the AD_IN15 High Limit registers.	S3, S4/5
7	AD16_ERR	RWC	This bit is set when the AD_IN16 voltage has fallen outside the range defined by the AD_IN16 Low Limit and the AD_IN16 High Limit registers.	none

3.17.4.4 Register 43h B_Error Status 4

Register Address	Read/ Write	Register Name	Bit 7	Bit 6	Bit 5	Bit 4	Bit 3	Bit 2	Bit 1	Bit 0	Default Value
43h	RWC	B_Error Status 4	D2_ ERR	D1_ ERR	DV_{DD}P2 _ERR	DV_{DD}P1 _ERR	SCSI2 _ERR	SCSI1 _ERR	RES		00h

Bit	Name	R/W	Description	Sleep Masking
1:0	RES	R	Reserved	N/A
2	SCSI1_ERR	RWC	SCSI Fuse Error This bit is set if $\overline{\text{SCSI_TERM1}}$ has been asserted.	S3, S4/5
3	SCSI2_ERR	RWC	SCSI Fuse Error This bit is set if $\overline{\text{SCSI_TERM2}}$ has been asserted.	S3, S4/5
4	DV_{DD}P1_ERR	RWC	Dynamic Vccp Limit Error. This bit is set if AD_IN7 (P1_Vccp) did not match the requested voltage as reported by P1_VID[5:0].	S3, S4/5
5	DV_{DD}P2_ERR	RWC	Dynamic Vccp Limit Error. This bit is set if AD_IN8 (P2_Vccp) did not match the requested voltage as reported by P1_VID[5:0].	S3, S4/5
6	D1_ERR	RWC	Diode Fault Error This bit is set if there is an open or short circuit on the REMOTE1+ and REMOTE1− pins.	S3*, S4/5*
7	D2_ERR	RWC	Diode Fault Error This bit is set if there is an open or short circuit on the REMOTE2+ and REMOTE2− pins.	S3*, S4/5*

3.17.4.5 Register 44h $\overline{\text{B_P1_PROCHOT}}$ Error Status

Register Address	Read/ Write	Register Name	Bit 7	Bit 6	Bit 5	Bit 4	Bit 3	Bit 2	Bit 1	Bit 0	Default Value
44h	RWC	$\overline{\text{B_P1_PROCHOT}}$ Error Status	PH1 _ERR	TMAX	T100	T75	T50	T25	T12	T0	00h

Bit	Name	R/W	Description	Sleep Masking
0	T0	RWC	Set when $\overline{\text{P1_PROCHOT}}$ has had a throttled event. This bit is set for any amount of $\overline{\text{PROCHOT}}$ throttling >0%.	S3, S4/5
1	T12	RWC	Set when $\overline{\text{P1_PROCHOT}}$ has throttled greater than or equal to 0.39% but less than 12.5%.	S3, S4/5
2	T25	RWC	Set when $\overline{\text{P1_PROCHOT}}$ has throttled greater than or equal to 12.5% but less than 25%.	S3, S4/5
3	T50	RWC	Set when $\overline{\text{P1_PROCHOT}}$ has throttled greater than or equal to 25% but less than 50%.	S3, S4/5
4	T75	RWC	Set when $\overline{\text{P1_PROCHOT}}$ has throttled greater than or equal to 50% but less than 75%.	S3, S4/5
5	T100	RWC	Set when $\overline{\text{P1_PROCHOT}}$ has throttled greater than or equal to 75% but less than 100%.	S3, S4/5

Copyright © 2003–2013, Texas Instruments Incorporated

Bit	Name	R/W	Description	Sleep Masking
6	TMAX	RWC	Set when $\overline{\text{P1_PROCHOT}}$ has throttled 100%.	S3, S4/5
7	PH1_ERR	RWC	Set when $\overline{\text{P1_PROCHOT}}$ has throttled more than the user limit.	S3, S4/5

The PH1_ERR bit is the only bit in this register that will set BMC_ ERR in the LM93 Status/Control register.

3.17.4.6 Register 45h $\overline{\text{B_P2_PROCHOT}}$ Error Status

Register Address	Read/ Write	Register Name	Bit 7	Bit 6	Bit 5	Bit 4	Bit 3	Bit 2	Bit 1	Bit 0	Default Value
45h	RWC	$\overline{\text{B_P2_PROCHOT}}$ Error Status	PH2 _ERR	TMAX	T100	T75	T50	T25	T12	T0	00h

Bit	Name	R/W	Description	Sleep Masking
0	T0	RWC	Set when $\overline{\text{P2_PROCHOT}}$ has had a throttled event. This bit is set for any amount of $\overline{\text{PROCHOT}}$ throttling >0%.	S3, S4/5
1	T12	RWC	Set when $\overline{\text{P2_PROCHOT}}$ has throttled greater than or equal to 0.0% but less than 12.5%.	S3, S4/5
2	T25	RWC	Set when $\overline{\text{P2_PROCHOT}}$ has throttled greater than or equal to 12.5% but less than 25%.	S3, S4/5
3	T50	RWC	Set when $\overline{\text{P2_PROCHOT}}$ has throttled greater than or equal to 25% but less than 50%.	S3, S4/5
4	T75	RWC	Set when $\overline{\text{P2_PROCHOT}}$ has throttled greater than or equal to 50% but less than 75%.	S3, S4/5
5	T100	RWC	Set when $\overline{\text{P2_PROCHOT}}$ has throttled greater than or equal to 75% but less than 100%.	S3, S4/5
6	TMAX	RWC	Set when $\overline{\text{P2_PROCHOT}}$ has throttled 100%.	S3, S4/5
7	PH2_ERR	RWC	Set when $\overline{\text{P2_PROCHOT}}$ has throttled more than the user limit.	S3, S4/5

The PH2_ERR bit is the only bit in this register that will set BMC_ ERR in the LM93 Status/Control register.

3.17.4.7 Register 46h B_GPI Error Status

Register Address	Read/ Write	Register Name	Bit 7	Bit 6	Bit 5	Bit 4	Bit 3	Bit 2	Bit 1	Bit 0	Default Value
46h	RWC	B_GPI Error Status	GPI7 _ERR	GPI6 _ERR	GPI5 _ERR	GPI4 _ERR	GPI3 _ERR	GPI2 _ERR	GPI1 _ERR	GPI0 _ERR	00h

Bit	Name	R/W	Description	Sleep Masking
0	GPI0_ERR	RWC	This bit is set whenever GPIO0 is driven low (unless masked via the GPI Error Mask register).	S1*, S3*, S4/5*
1	GPI1_ERR	RWC	This bit is set whenever GPIO1 is driven low (unless masked via the GPI Error Mask register).	S1*, S3*, S4/5*
2	GPI2_ERR	RWC	This bit is set whenever GPIO2 is driven low (unless masked via the GPI Error Mask register).	S1*, S3*, S4/5*
3	GPI3_ERR	RWC	This bit is set whenever GPIO3 is driven low (unless masked via the GPI Error Mask register).	S1*, S3*, S4/5*
4	GPI4_ERR	RWC	This bit is set whenever GPIO4 is driven low (unless masked via the GPI Error Mask register).	S1*, S3*, S4/5*
5	GPI5_ERR	RWC	This bit is set whenever GPIO5 is driven low (unless masked via the GPI Error Mask register).	S1*, S3*, S4/5*
6	GPI6_ERR	RWC	This bit is set whenever GPIO6 is driven low (unless masked via the GPI Error Mask register).	S1*, S3*, S4/5*

Copyright © 2003–2013, Texas Instruments Incorporated

Bit	Name	R/W	Description	Sleep Masking
7	GPI7_ERR	RWC	This bit is set whenever GPIO7 is driven low (unless masked via the GPI Error Mask register).	S1*, S3*, S4/5*

3.17.4.8 Register 47h B_Fan Error Status

Register Address	Read/ Write	Register Name	Bit 7	Bit 6	Bit 5	Bit 4	Bit 3	Bit 2	Bit 1	Bit 0	Default Value
47h	RWC	B_Fan Error Status	RES				FAN4 _ERR	FAN3 _ERR	FAN2 _ERR	FAN1 _ERR	00h

Bit	Name	R/W	Description	Sleep Masking
0	FAN1_ERR	RWC	This bit is set when the Fan Tach 1 value register is above the value set in the Fan Tach 1 Limit register.	S1*, S3*, S4/5
1	FAN2_ERR	RWC	This bit is set when the Fan Tach 2 value register is above the value set in the Fan Tach 2 Limit register.	S1*, S3*, S4/5
2	FAN3_ERR	RWC	This bit is set when the Fan Tach 3 value register is above the value set in the Fan Tach 3 Limit register.	S1*, S3*, S4/5
3	FAN4_ERR	RWC	This bit is set when the Fan Tach 4 value register is above the value set in the Fan Tach 4 Limit register.	S1*, S3*, S4/5
7:4	RES	R	Reserved	N/A

3.17.5 HOST ERROR STATUS REGISTERS

The Host Error Status Registers contain several bits that each represent a particular error event that the LM93 can monitor. The LM93 sets a given bit whenever the corresponding error event occurs. The HOST_ERR bit in the LM93 Status/Control register also sets if any bit in the Host Error Status registers is set. The exception to this is the fixed threshold error status bits in the $\overline{\text{PROCHOT}}$ Error Status registers. They have no influence on HOST_ERR.

Once a bit is set in the Host Error Status registers, it is not automatically cleared by the LM93 if the error event goes away. Each bit must be cleared by software. If software attempts to clear a bit while the error condition still exists, the bit does not clear.

Software must specifically write a 1 to any bits it wishes to clear in the Host Error Status registers (write-one-to-clear).

Each register described in this section has a column labeled **Sleep Masking**. This column describes which error events are masked in various sleep states. The sleep state of the system is communicated to the LM93 by writing to the Sleep State Control register. If a sleep state in this column has a '*' next to it, it denotes that the error event is optionally masked in that sleep mode, depending on the Sleep State Mask registers.

3.17.5.1 Register 48h H_Error Status 1

Register Address	Read/ Write	Register Name	Bit 7	Bit 6	Bit 5	Bit 4	Bit 3	Bit 2	Bit 1	Bit 0	Default Value
48h	RWC	H_Error Status 1	RES		VRD2 _ERR	VRD1 _ERR	ZN4 _ERR	ZN3 _ERR	ZN2 _ERR	ZN1 _ERR	00h

Bit	Name	R/W	Description	Sleep Masking
0	ZN1_ERR	RWC	This bit is set when the zone 1 temperature has fallen outside the zone 1 temperature limits.	S3*, S4/5*
1	ZN2_ERR	RWC	This bit is set when the zone 2 temperature has fallen outside the zone 2 temperature limits.	S3*, S4/5*
2	ZN3_ERR	RWC	This bit is set when the zone 3 temperature has fallen outside the zone 3 temperature limits.	none

Bit	Name	R/W	Description	Sleep Masking
3	ZN4_ERR	RWC	This bit is set when the zone 4 temperature has fallen outside the zone 4 temperature limits.	none
4	VRD1_ERR	RWC	This bit is set when the $\overline{\text{VRD1_HOT}}$ input has been asserted.	S3, S4/5
5	VRD2_ERR	RWC	This bit is set when the $\overline{\text{VRD2_HOT}}$ input has been asserted.	S3, S4/5
7:6	RES	R	Reserved	N/A

3.17.5.2 Register 49h H_Error Status 2

Register Address	Read/ Write	Register Name	Bit 7	Bit 6	Bit 5	Bit 4	Bit 3	Bit 2	Bit 1	Bit 0	Default Value
49h	RWC	H_Error Status 2	ADIN8 _ERR	ADIN7 _ERR	ADIN6 _ERR	ADIN5 _ERR	ADIN4 _ERR	ADIN3 _ERR	ADIN2 _ERR	ADIN1 _ERR	00h

Bit	Name	R/W	Description	Sleep Masking
0	AD1_ERR	RWC	This bit is set when the AD_IN1 voltage has fallen outside the range defined by the AD_IN1 Low Limit and the AD_IN1 High Limit registers.	S3, S4/5
1	AD2_ERR	RWC	This bit is set when the AD_IN2 voltage has fallen outside the range defined by the AD_IN2 Low Limit and the AD_IN2 High Limit registers.	S3, S4/5
2	AD3_ERR	RWC	This bit is set when the AD_IN3 voltage has fallen outside the range defined by the AD_IN3 Low Limit and the AD_IN3 High Limit registers.	S3, S4/5
3	AD4_ERR	RWC	This bit is set when the AD_IN4 voltage has fallen outside the range defined by the AD_IN4 Low Limit and the AD_IN4 High Limit registers.	S3, S4/5
4	AD5_ERR	RWC	This bit is set when the AD_IN5 voltage has fallen outside the range defined by the AD_IN5 Low Limit and the AD_IN5 High Limit registers.	S3, S4/5
5	AD6_ERR	RWC	This bit is set when the AD_IN6 voltage has fallen outside the range defined by the AD_IN6 Low Limit and the AD_IN6 High Limit registers.	S3, S4/5
6	AD7_ERR	RWC	This bit is set when the AD_IN7 voltage has fallen outside the range defined by the AD_IN7 Low Limit and the AD_IN7 High Limit registers.	S3, S4/5
7	AD8_ERR	RWC	This bit is set when the AD_IN8 voltage has fallen outside the range defined by the AD_IN8 Low Limit and the AD_IN8 High Limit registers.	S3, S4/5

3.17.5.3 Register 4Ah H_Error Status 3

Register Address	Read/ Write	Register Name	Bit 7	Bit 6	Bit 5	Bit 4	Bit 3	Bit 2	Bit 1	Bit 0	Default Value
4Ah	RWC	H_Error Status 3	ADIN16 _ERR	ADIN15 _ERR	ADIN14 _ERR	ADIN13 _ERR	ADIN12 _ERR	ADIN11 _ERR	ADIN10 _ERR	ADIN9 _ERR	00h

Bit	Name	R/W	Description	Sleep Masking
0	AD9_ERR	RWC	This bit is set when the AD_IN9 voltage has fallen outside the range defined by the AD_IN9 Low Limit and the AD_IN9 High Limit registers.	S3, S4/5
1	AD10_ERR	RWC	This bit is set when the AD_IN10 voltage has fallen outside the range defined by the AD_IN10 Low Limit and the AD_IN10 High Limit registers.	S3, S4/5
2	AD11_ERR	RWC	This bit is set when the AD_IN11 voltage has fallen outside the range defined by the AD_IN11 Low Limit and the AD_IN11 High Limit registers.	S3, S4/5
3	AD12_ERR	RWC	This bit is set when the AD_IN12 voltage has fallen outside the range defined by the AD_IN12 Low Limit and the AD_IN12 High Limit registers.	S3*, S4/5*
4	AD13_ERR	RWC	This bit is set when the AD_IN13 voltage has fallen outside the range defined by the AD_IN13 Low Limit and the AD_IN13 High Limit registers.	S3*, S4/5*
5	AD14_ERR	RWC	This bit is set when the AD_IN14 voltage has fallen outside the range defined by the AD_IN14 Low Limit and the AD_IN14 High Limit registers.	S3*, S4/5*
6	AD15_ERR	RWC	This bit is set when the AD_IN15 voltage has fallen outside the range defined by the AD_IN15 Low Limit and the AD_IN15 High Limit registers.	S3, S4/5
7	AD16_ERR	RWC	This bit is set when the AD_IN16 voltage has fallen outside the range defined by the AD_IN16 Low Limit and the AD_IN16 High Limit registers.	none

 Copyright © 2003–2013, Texas Instruments Incorporated

3.17.5.4 Register 4Bh H_Error Status 4

Register Address	Read/ Write	Register Name	Bit 7	Bit 6	Bit 5	Bit 4	Bit 3	Bit 2	Bit 1	Bit 0	Default Value
4Bh	RWC	H_Error Status 4	D2_ ERR	D1_ ERR	DV_{DD}P2 _ERR	DV_{DD}P1 _ERR	SCSI2 _ERR	SCSI1 _ERR	RES		00h

Bit	Name	R/W	Description	Sleep Masking
1:0	RES	R	Reserved	N/A
2	SCSI1_ERR	RWC	SCSI Fuse Error This bit is set if $\overline{\text{SCSI_TERM1}}$ has been asserted.	S3, S4/5
3	SCSI2_ERR	RWC	SCSI Fuse Error This bit is set if $\overline{\text{SCSI_TERM2}}$ has been asserted.	S3, S4/5
4	DV_{DD}P1_ERR	RWC	Dynamic Vccp Limit Error. This bit is set if AD_IN7 (P1_Vccp) did not match the requested voltage as reported by P1_VID[5:0].	S3, S4/5
5	DV_{DD}P2_ERR	RWC	Dynamic Vccp Limit Error. This bit is set if AD_IN8 (P2_Vccp) did not match the requested voltage as reported by P1_VID[5:0].	S3, S4/5
6	D1_ERR	RWC	Diode Fault Error This bit is set if there is an open or short circuit on the REMOTE1+ and REMOTE1− pins.	S3*, S4/5*
7	D2_ERR	RWC	Diode Fault Error This bit is set if there is an open or short circuit on the REMOTE2+ and REMOTE2− pins.	S3*, S4/5*

3.17.5.5 Register 4Ch $\overline{\text{H_P1_PROCHOT}}$ Error Status

Register Address	Read/ Write	Register Name	Bit 7	Bit 6	Bit 5	Bit 4	Bit 3	Bit 2	Bit 1	Bit 0	Default Value
4Ch	RWC	$\overline{\text{H_P1_PROCHOT}}$ Error Status	PH1_ERR	TMAX	T100	T75	T50	T25	T12	T0	00h

Bit	Name	R/W	Description	Sleep Masking
0	T0	RWC	Set when $\overline{\text{P1_PROCHOT}}$ has had a throttled event. This bit is set for any amount of $\overline{\text{PROCHOT}}$ throttling >0%.	S3, S4/5
1	T12	RWC	Set when $\overline{\text{P1_PROCHOT}}$ has throttled greater than or equal to 0.00% but less than 12.5%.	S3, S4/5
2	T25	RWC	Set when $\overline{\text{P1_PROCHOT}}$ has throttled greater than or equal to 12.5% but less than 25%.	S3, S4/5
3	T50	RWC	Set when $\overline{\text{P1_PROCHOT}}$ has throttled greater than or equal to 25% but less than 50%.	S3, S4/5
4	T75	RWC	Set when $\overline{\text{P1_PROCHOT}}$ has throttled greater than or equal to 50% but less than 75%.	S3, S4/5
5	T100	RWC	Set when $\overline{\text{P1_PROCHOT}}$ has throttled greater than or equal to 75% but less than 100%.	S3, S4/5
6	TMAX	RWC	Set when $\overline{\text{P1_PROCHOT}}$ has throttled 100%.	S3, S4/5
7	PH1_ERR	RWC	Set when $\overline{\text{P1_PROCHOT}}$ has throttled more than the user limit.	S3, S4/5

The PH1_ERR bit is the only bit in this register that will set HOST_ ERR in the LM93 Status/Control register.

3.17.5.6 Register 4Dh $\overline{\text{B_P2_PROCHOT}}$ Error Status

Register Address	Read/ Write	Register Name	Bit 7	Bit 6	Bit 5	Bit 4	Bit 3	Bit 2	Bit 1	Bit 0	Default Value
4Dh	RWC	$\overline{\text{H_P2_PROCHOT}}$ Error Status	PH2_ERR	TMAX	T100	T75	T50	T25	T12	T0	00h

Bit	Name	R/W	Description	Sleep Masking
0	T0	RWC	Set when $\overline{\text{P2_PROCHOT}}$ has had a throttled event. This bit is set for any amount of $\overline{\text{PROCHOT}}$ throttling >0%.	S3, S4/5
1	T12	RWC	Set when $\overline{\text{P2_PROCHOT}}$ has throttled greater than or equal to 0.00% but less than 12.5%.	S3, S4/5
2	T25	RWC	Set when $\overline{\text{P2_PROCHOT}}$ has throttled greater than or equal to 12.5% but less than 25%.	S3, S4/5
3	T50	RWC	Set when $\overline{\text{P2_PROCHOT}}$ has throttled greater than or equal to 25% but less than 50%.	S3, S4/5
4	T75	RWC	Set when $\overline{\text{P2_PROCHOT}}$ has throttled greater than or equal to 50% but less than 75%.	S3, S4/5
5	T100	RWC	Set when $\overline{\text{P2_PROCHOT}}$ has throttled greater than or equal to 75% but less than 100%.	S3, S4/5
6	TMAX	RWC	Set when $\overline{\text{P2_PROCHOT}}$ has throttled 100%.	S3, S4/5
7	PH2_ERR	RWC	Set when $\overline{\text{P2_PROCHOT}}$ has throttled more than the user limit.	S3, S4/5

The PH2_ERR bit is the only bit in this register that will set HOST_ ERR in the LM93 Status/Control register.

3.17.5.7 Register 4Eh H_GPI Error Status

Register Address	Read/ Write	Register Name	Bit 7	Bit 6	Bit 5	Bit 4	Bit 3	Bit 2	Bit 1	Bit 0	Default Value
4Eh	RWC	H_GPI Error Status	GPI7 _ERR	GPI6 _ERR	GPI5 _ERR	GPI4 _ERR	GPI3 _ERR	GPI2 _ERR	GPI1 _ERR	GPI0 _ERR	00h

Bit	Name	R/W	Description	Sleep Masking
0	GPI0_ERR	RWC	This bit is set whenever GPIO0 is driven low (unless masked via the GPI Error Mask register).	S1*, S3*, S4/5*
1	GPI1_ERR	RWC	This bit is set whenever GPIO1 is driven low (unless masked via the GPI Error Mask register).	S1*, S3*, S4/5*
2	GPI2_ERR	RWC	This bit is set whenever GPIO2 is driven low (unless masked via the GPI Error Mask register).	S1*, S3*, S4/5*
3	GPI3_ERR	RWC	This bit is set whenever GPIO3 is driven low (unless masked via the GPI Error Mask register).	S1*, S3*, S4/5*
4	GPI4_ERR	RWC	This bit is set whenever GPIO4 is driven low (unless masked via the GPI Error Mask register).	S1*, S3*, S4/5*
5	GPI5_ERR	RWC	This bit is set whenever GPIO5 is driven low (unless masked via the GPI Error Mask register).	S1*, S3*, S4/5*
6	GPI6_ERR	RWC	This bit is set whenever GPIO6 is driven low (unless masked via the GPI Error Mask register).	S1*, S3*, S4/5*
7	GPI7_ERR	RWC	This bit is set whenever GPIO7 is driven low (unless masked via the GPI Error Mask register).	S1*, S3*, S4/5*

3.17.5.8 Register 4Fh H_Fan Error Status

Register Address	Read/ Write	Register Name	Bit 7	Bit 6	Bit 5	Bit 4	Bit 3	Bit 2	Bit 1	Bit 0	Default Value
4Fh	RWC	H_Fan Error Status	RES				FAN4 _ERR	FAN3 _ERR	FAN2 _ERR	FAN1 _ERR	00h

Bit	Name	R/W	Description	Sleep Masking
0	FAN1_ERR	RWC	This bit is set when the Fan Tach 1 value register is above the value set in the Fan Tach 1 Limit register.	S1*, S3*, S4/5
1	FAN2_ERR	RWC	This bit is set when the Fan Tach 2 value register is above the value set in the Fan Tach 2 Limit register.	S1*, S3*, S4/5

Copyright © 2003–2013, Texas Instruments Incorporated

Bit	Name	R/W	Description	Sleep Masking
2	FAN3_ERR	RWC	This bit is set when the Fan Tach 3 value register is above the value set in the Fan Tach 3 Limit register.	S1*, S3*, S4/5
3	FAN4_ERR	R	This bit is set when the Fan Tach 4 value register is above the value set in the Fan Tach 4 Limit register.	S1*, S3*, S4/5
7:4	RES	R	Reserved	N/A

3.17.6 VALUE REGISTERS

3.17.6.1 Registers 50–53h Unfiltered Temperature Value Registers

Register Address	Read/ Write	Register Name	Bit 7	Bit 6	Bit 5	Bit 4	Bit 3	Bit 2	Bit 1	Bit 0	Default Value
50h	R	Zone 1 (CPU1) Temp	7	6	5	4	3	2	1	0	N/D
51h	R	Zone 2 (CPU1) Temp	7	6	5	4	3	2	1	0	N/D
52h	R	Zone 3 (Internal) Temp	7	6	5	4	3	2	1	0	N/D
53h	R/W	Zone 4 (External Digital) Temp	7	6	5	4	3	2	1	0	N/D

Zones 1, 2 and 3 are all automatically updated by the LM93. The Zone 4 (External Digital) Temp register must be written by an external SMBus device.

The temperature registers for zones 1 and 2 must return a value of 80h if the remote diode pins are not implemented by the board designer or are not functioning properly.

3.17.6.2 Registers 54–55h Filtered Temperature Value Registers

Register Address	Read/ Write	Register Name	Bit 7	Bit 6	Bit 5	Bit 4	Bit 3	Bit 2	Bit 1	Bit 0	Default Value
54h	R	Zone 1 (CPU1) Filtered Temp	7	6	5	4	3	2	1	0	00h
55h	R	Zone 2 (CPU1) Filtered Temp	7	6	5	4	3	2	1	0	00h

These registers reflect the temperature of zones 1 and 2 after the spike smoothing filter has been applied.

The characteristics of the filtering can be adjusted by using the Zones 1/2 Spike Smoothing Control register.

3.17.6.3 Register 56–65h A/D Channel Voltage Registers

Register Address	Read/ Write	Register Name	Bit 7	Bit 6	Bit 5	Bit 4	Bit 3	Bit 2	Bit 1	Bit 0	Default Value
56h	R	AD_IN1 Voltage	7	6	5	4	3	2	1	0	N/D
57h	R	AD_IN2 Voltage	7	6	5	4	3	2	1	0	N/D
58h	R	AD_IN3 Voltage	7	6	5	4	3	2	1	0	N/D
59h	R	AD_IN4 Voltage	7	6	5	4	3	2	1	0	N/D

Copyright © 2003–2013, Texas Instruments Incorporated

Register Address	Read/ Write	Register Name	Bit 7	Bit 6	Bit 5	Bit 4	Bit 3	Bit 2	Bit 1	Bit 0	Default Value
5Ah	R	AD_IN5 Voltage	7	6	5	4	3	2	1	0	N/D
5Bh	R	AD_IN6 Voltage	7	6	5	4	3	2	1	0	N/D
5Ch	R	AD_IN7 Voltage	7	6	5	4	3	2	1	0	N/D
5Dh	R	AD_IN8 Voltage	7	6	5	4	3	2	1	0	N/D
5Eh	R	AD_IN9 Voltage	7	6	5	4	3	2	1	0	N/D
5Fh	R	AD_IN10 Voltage	7	6	5	4	3	2	1	0	N/D
60h	R	AD_IN11 Voltage	7	6	5	4	3	2	1	0	N/D
61h	R	AD_IN12 Voltage	7	6	5	4	3	2	1	0	N/D
62h	R	AD_IN13 Voltage	7	6	5	4	3	2	1	0	N/D
63h	R	AD_IN14 Voltage	7	6	5	4	3	2	1	0	N/D
64h	R	AD_IN15 Voltage	7	6	5	4	3	2	1	0	N/D
65h	R	AD_IN16 Voltage	7	6	5	4	3	2	1	0	N/D

The voltage reading registers reflect the current voltage of the LM93 voltage monitoring inputs. Voltages are presented in the registers at ¾ full scale for the nominal voltage. Therefore, at nominal voltage, each register reads C0h.

3.17.6.4 Register 67h Current $\overline{\text{P1_PROCHOT}}$

Register Address	Read/ Write	Register Name	Bit 7	Bit 6	Bit 5	Bit 4	Bit 3	Bit 2	Bit 1	Bit 0	Default Value
67h	R	Current $\overline{\text{P1_PROCHOT}}$	7	6	5	4	3	2	1	0	00h

This is the value of the $\overline{\text{PROCHOT}}$ percentage active time for Processor 1 at the end of each $\overline{\text{PROCHOT}}$ monitoring interval as set by the $\overline{\text{PROCHOT}}$ Time Interval register. Writing to this register does not effect the register contents, but does restart the capture cycle for both $\overline{\text{PROCHOT}}$ channels ($\overline{\text{P1_PROCHOT}}$ and $\overline{\text{P2_PROCHOT}}$). A register value of one represents anything greater than 0% but less than 0.39% of active time.

Register Value (Decimal)	Percentage Active Time
0	0%
1	0.39%
2	0.78%
• • •	• • •
n	n/256*100
255	99.60%

Copyright © 2003–2013, Texas Instruments Incorporated

3.17.6.5 Register 68h Average $\overline{\text{P1_PROCHOT}}$

Register Address	Read/ Write	Register Name	Bit 7	Bit 6	Bit 5	Bit 4	Bit 3	Bit 2	Bit 1	Bit 0	Default Value
68h	R	Average $\overline{\text{P1_PROCHOT}}$	7	6	5	4	3	2	1	0	N/D

This is the average percentage active time of $\overline{\text{P1_PROCHOT}}$. It is the result of adding the contents of this register to the contents of the Current $\overline{\text{P1_PROCHOT}}$ register and dividing the result by 2. The update occurs at the same time that the Current $\overline{\text{P1_PROCHOT}}$ register gets updated. A register value of one represents anything greater than 0% but less than 0.39% of active time.

3.17.6.6 Register 69h Current $\overline{\text{P2_PROCHOT}}$

Register Address	Read/ Write	Register Name	Bit 7	Bit 6	Bit 5	Bit 4	Bit 3	Bit 2	Bit 1	Bit 0	Default Value
69h	R	Current $\overline{\text{P2_PROCHOT}}$	7	6	5	4	3	2	1	0	00h

This is the value of the $\overline{\text{PROCHOT}}$ percentage active time for Processor 2 at the end of each $\overline{\text{PROCHOT}}$ monitoring interval as set by the $\overline{\text{PROCHOT}}$ Time Interval register. Writing to this register does not effect the register contents, but does restart the capture cycle for both $\overline{\text{PROCHOT}}$ channels ($\overline{\text{P1_PROCHOT}}$ and $\overline{\text{P2_PROCHOT}}$). A register value of one represents anything greater than 0% but less than 0.39% of active time.

Register Value (Decimal)	Percentage Active Time
0	0%
1	0.39%
2	0.78%
• • •	• • •
n	n/256*100
255	99.60%

3.17.6.7 Register 6Ah Average $\overline{\text{P2_PROCHOT}}$

Register Address	Read/ Write	Register Name	Bit 7	Bit 6	Bit 5	Bit 4	Bit 3	Bit 2	Bit 1	Bit 0	Default Value
6Ah	R	Average $\overline{\text{P2_PROCHOT}}$	7	6	5	4	3	2	1	0	N/D

This is the average percentage active time of $\overline{\text{P2_PROCHOT}}$. It is the result of adding the contents of this register to the contents of the Current $\overline{\text{P2_PROCHOT}}$ register and dividing the result by 2. The update occurs at the same time that the Current $\overline{\text{P2_PROCHOT}}$ register gets updated. A register value of one represents anything greater than 0% but less than 0.39% of active time.

3.17.6.8 Register 6Bh GPI State

Register Address	Read/ Write	Register Name	Bit 7	Bit 6	Bit 5	Bit 4	Bit 3	Bit 2	Bit 1	Bit 0	Default Value
6Bh	R	GPI State	GPI7	GPI6	GP15	GPI4	GPI3	GPI2	GPI1	GPI0	N/D

Bit	Name	Read/Write	Description
0	GPI0	R	1 if GPIO_0 input is LOW
1	GPI1	R	1 if GPIO_1 input is LOW
2	GPI2	R	1 if GPIO_2 input is LOW
3	GPI3	R	1 if GPIO_3 input is LOW
4	GPI4	R	1 if GPIO_4 input is LOW
5	GPI5	R	1 if GPIO_5 input is LOW
6	GPI6	R	1 if GPIO_6 input is LOW
7	GPI7	R	1 if GPIO_7 input is LOW

3.17.6.9 Register 6Ch P1_VID

Register Address	Read/ Write	Register Name	Bit 7	Bit 6	Bit 5	Bit 4	Bit 3	Bit 2	Bit 1	Bit 0	Default Value
6Ch	R	P1_VID	RES		P1_VID						N/D

Bit	Name	Read/Write	Description
5:0	P1_VID	R	Processor 1 VID status. Reports the current value of the P1_VID5 through P1_VID0 pins. This register should only be updated if P1_VID5 through P1_VID0 remain stable for at least 600 ns.
7:6	RES	R	Reserved

3.17.6.10 Register 6Dh P2_VID

Register Address	Read/ Write	Register Name	Bit 7	Bit 6	Bit 5	Bit 4	Bit 3	Bit 2	Bit 1	Bit 0	Default Value
6Dh	R	P2_VID	RES		P2_VID						N/D

Bit	Name	Read/Write	Description
5:0	P2_VID	R	Processor 2VID status. Reports the current value of the P2_VID5 through P2_VID0 pins. This register should only be updated if P2_VID5 through P2_VID0 remain stable for at least 600 ns.
7:6	RES	R	Reserved

3.17.6.11 Register 6E–75h Fan Tachometer Readings

Register Address	Read/ Write	Register Name	Bit 7	Bit 6	Bit 5	Bit 4	Bit 3	Bit 2	Bit 1	Bit 0	Default Value
6Eh	R	Fan Tach 1 LSB	TACH[5:0]						RES		N/D
6Fh	R	Fan Tach 1 MSB	TACH[13:6]								N/D
70h	R	Fan Tach 2 LSB	TACH2[5:0]						RES		N/D
71h	R	Fan Tach 2 MSB	TACH2[13:6]								N/D
72h	R	Fan Tach 3 LSB	TACH3[5:0]						RES		N/D
73h	R	Fan Tach 3 MSB	TACH3[13:6]								N/D
74h	R	Fan Tach 4 LSB	TACH4[5:0]						RES		N/D

Copyright © 2003–2013, Texas Instruments Incorporated

Register Address	Read/ Write	Register Name	Bit 7	Bit 6	Bit 5	Bit 4	Bit 3	Bit 2	Bit 1	Bit 0	Default Value
75h	R	Fan Tach 4 MSB	TACH4[13:6]								N/D

The 14-bit fan tach readings indicate the number of 22.5 kHz clock periods that occurred during two full periods of the tachometer input signal. Most fans produce two tachometer pulses per full revolution. These registers must be updated at least once every second.

The fan tachometer reading registers must always return an accurate fan tachometer measurement, even when a fan is disabled or non-functional. 3FFFh indicates that the fan is stalled, not spinning fast enough to measure, or the tachometer input is not connected to a valid signal.

If the pulses per revolution of the fan is known, the RPM can be calculated with the following equation:

RPM= 22500 cycles/sec * 60 sec/min * 2 pulses / COUNT cycles / PULSES_PER_REV

where:

- PULSES_PER_REV = the number of pulses that the fan produces per revolution
- COUNT = The 14-bit value read from the tach register (8)

3.17.7 LIMIT REGISTERS

3.17.7.1 Registers 78–7Fh Temperature Limit Registers

Register Address	Read/ Write	Register Name	Bit 7	Bit 6	Bit 5	Bit 4	Bit 3	Bit 2	Bit 1	Bit 0	Default Value
78h	R/W	Processor 1 (Zone1) Low Temp	7	6	5	4	3	2	1	0	80h
79h	R/W	Processor 1 (Zone1) High Temp	7	6	5	4	3	2	1	0	80h
7Ah	R/W	Processor 2 (Zone2) Low Temp	7	6	5	4	3	2	1	0	80h
7Bh	R/W	Processor 2 (Zone2) High Temp	7	6	5	4	3	2	1	0	80h
7Ch	R/W	Internal (Zone3) Low Temp	7	6	5	4	3	2	1	0	80h
7Dh	R/W	Internal (Zone3) High Temp	7	6	5	4	3	2	1	0	80h
7Eh	R/W	External Digital (Zone4) Low Temp	7	6	5	4	3	2	1	0	80h
7Fh	R/W	External Digital (Zone4) High Temp	7	6	5	4	3	2	1	0	80h

Copyright © 2003–2013, Texas Instruments Incorporated

If an external temperature input or the internal temperature sensor either exceeds the value set in the high limit register or falls below the value set in the low limit register, the corresponding bit in the B_ and H_Error Status 1 register is set automatically by the LM93. For example, if the temperature read from the Remote1− and Remote1+ inputs exceeds the Processor (Zone1) High Temp register limit setting, the ZN1_ERR bit in both B_Error Status 1 and H_Error Status 1 registers is set. The temperature limits in these registers is represented as 8 bit, 2's complement, signed numbers in Celsius.

If any high temp limit register is set to 80h then the B_ and H_Error Status register bit for that temperature channel is masked.

3.17.7.2 Registers 80–83h Fan Boost Temperature Registers

Register Address	Read/ Write	Register Name	Bit 7	Bit 6	Bit 5	Bit 4	Bit 3	Bit 2	Bit 1	Bit 0	Default Value
80h	R/W	Fan Boost Temp Zone 1	7	6	5	4	3	2	1	0	3Ch
81h	R/W	Fan Boost Temp Zone 2	7	6	5	4	3	2	1	0	3Ch
82h	R/W	Fan Boost Temp Zone 3	7	6	5	4	3	2	1	0	23h
83h	R/W	Fan Boost Temp Zone 4	7	6	5	4	3	2	1	0	23h

If any thermal zone exceeds the temperature set in the Fan Boost Limit register, both of the PWM outputs are set to 100%. The fan boost function takes precedence over manual override. This is a safety feature that attempts to cool the system if there is a potentially catastrophic thermal event. If set to 7Fh and the fan control temperature resolution is 1°C, the feature is disabled.

Default = 60°C = 3Ch for zones 1 and 2

Default = 35°C = 23h for zones 3 and 4

The temperature has to fall the number of degrees specified in the Fan Boost Hysteresis registers, below this temperature to cause the PWM outputs to return to normal operation.

3.17.7.3 Registers 90–AFh Voltage Limit Registers

Register Address	Read/ Write	Register Name	Bit 7	Bit 6	Bit 5	Bit 4	Bit 3	Bit 2	Bit 1	Bit 0	Default Value
90h	R/W	AD_IN1 Low Limit	7	6	5	4	3	2	1	0	00h
91h	R/W	AD_IN1 High Limit	7	6	5	4	3	2	1	0	FFh
92h	R/W	AD_IN2 Low Limit	7	6	5	4	3	2	1	0	00h
93h	R/W	AD_IN2 High Limit	7	6	5	4	3	2	1	0	FFh
94h	R/W	AD_IN3 Low Limit	7	6	5	4	3	2	1	0	00h
95h	R/W	AD_IN3 High Limit	7	6	5	4	3	2	1	0	FFh
96h	R/W	AD_IN4 Low Limit	7	6	5	4	3	2	1	0	00h
97h	R/W	AD_IN4 High Limit	7	6	5	4	3	2	1	0	FFh

Copyright © 2003–2013, Texas Instruments Incorporated

Register Address	Read/ Write	Register Name	Bit 7	Bit 6	Bit 5	Bit 4	Bit 3	Bit 2	Bit 1	Bit 0	Default Value
98h	R/W	AD_IN5 Low Limit	7	6	5	4	3	2	1	0	00h
99h	R/W	AD_IN5 High Limit	7	6	5	4	3	2	1	0	FFh
9Ah	R/W	AD_IN6 Low Limit	7	6	5	4	3	2	1	0	00h
9Bh	R/W	AD_IN6 High Limit	7	6	5	4	3	2	1	0	FFh
9Ch	R/W	AD_IN7 Low Limit	7	6	5	4	3	2	1	0	00h
9Dh	R/W	AD_IN7 High Limit	7	6	5	4	3	2	1	0	FFh
9Eh	R/W	AD_IN8 Low Limit	7	6	5	4	3	2	1	0	00h
9Fh	R/W	AD_IN8 High Limit	7	6	5	4	3	2	1	0	FFh
A0h	R/W	AD_IN9 Low Limit	7	6	5	4	3	2	1	0	00h
A1h	R/W	AD_IN9 High Limit	7	6	5	4	3	2	1	0	FFh
A2h	R/W	AD_IN10 Low Limit	7	6	5	4	3	2	1	0	00h
A3h	R/W	AD_IN10 High Limit	7	6	5	4	3	2	1	0	FFh
A4h	R/W	AD_IN11 Low Limit	7	6	5	4	3	2	1	0	00h
A5h	R/W	AD_IN11 High Limit	7	6	5	4	3	2	1	0	FFh
A6h	R/W	AD_IN12 Low Limit	7	6	5	4	3	2	1	0	00h
A7h	R/W	AD_IN12 High Limit	7	6	5	4	3	2	1	0	FFh
A8h	R/W	AD_IN13 Low Limit	7	6	5	4	3	2	1	0	00h
A9h	R/W	AD_IN13 High Limit	7	6	5	4	3	2	1	0	FFh
AAh	R/W	AD_IN14 Low Limit	7	6	5	4	3	2	1	0	00h
ABh	R/W	AD_IN14 High Limit	7	6	5	4	3	2	1	0	FFh
ACh	R/W	AD_IN15 Low Limit	7	6	5	4	3	2	1	0	00h
ADh	R/W	AD_IN15 High Limit	7	6	5	4	3	2	1	0	FFh
AEh	R/W	AD_IN16 Low Limit	7	6	5	4	3	2	1	0	00h
AFh	R/W	AD_IN16 High Limit	7	6	5	4	3	2	1	0	FFh

FFh as the high limit acts as a mask for that voltage sensor and so prevents this channel from being able to set the associated error status bit in the B_ or H_ Error Status registers, for both high and low limit errors.

If a voltage input either exceeds the value set in the voltage high limit register or falls below the value set in the voltage low limit register, the corresponding bit is set automatically by the LM93 in the B_ and H_Error Status registers.

3.17.7.4 Register B0–B1h $\overline{\text{PROCHOT}}$ User Limit Registers

Register Address	Read/ Write	Register Name	Bit 7	Bit 6	Bit 5	Bit 4	Bit 3	Bit 2	Bit 1	Bit 0	Default Value
B0h	R/W	$\overline{\text{P1_PROCHOT}}$ User Limit	7	6	5	4	3	2	1	0	FFh
B1h	R/W	$\overline{\text{P2_PROCHOT}}$ User Limit	7	6	5	4	3	2	1	0	FFh

These registers allow a user limit to be set for the $\overline{\text{PROCHOT}}$ monitoring function. If the corresponding Current $\overline{\text{Px_PROCHOT}}$ register exceeds this value, the PH1_ERR or PH2_ERR bit is set in the corresponding Host and BMC error status registers. A value of FFh acts as a mask and prevents the error status bits from being set.

Register Value (Decimal)	Threshold Percentage
0	0%
1	0.39%
2	0.78%
• • •	• • •
n	n/256*100
255	99.60%

3.17.7.5 Register B2–B3h Dynamic Vccp Limit Offset Registers

Register Address	Read/ Write	Register Name	Bit 7	Bit 6	Bit 5	Bit 4	Bit 3	Bit 2	Bit 1	Bit 0	Default Value
B2h	R/W	Vccp1 Limit Offsets	UPPER_OFFSET1				LOWER_OFFSET1				17h
B3h	R/W	Vccp2 Limit Offsets	UPPER_OFFSET2				LOWER_OFFSET2				17h

These offsets are used to determine the upper and lower limits of the dynamic Vccp window comparator. These offsets are added or subtracted from the value selected by the VID bits.

LOWER_OFFSET1 or LOWER_OFFSET2	Lower Offset
0h	25 mV
1h	50 mV
2h	75 mV
3h	100 mV
~ ~	~ ~
Ch	325 mV
Dh	350 mV
Eh	375 mV
Fh	400 mV

Copyright © 2003–2013, Texas Instruments Incorporated

UPPER_OFFSET1 or UPPER_OFFSET2	Upper Offset
0h	12.5 mV
1h	25 mV
2h	37.5 mV
3h	50 mV
~ ~	~ ~
Dh	175 mV
Eh	187.5 mV
Fh	200 mV

3.17.7.6 Register B4–BBh Fan Tach Limit Registers

Register Address	Read/ Write	Register Name	Bit 7	Bit 6	Bit 5	Bit 4	Bit 3	Bit 2	Bit 1	Bit 0	Default Value
B4h	R/W	Fan Tach 1 Limit LSB	TLIMIT1[5:0]						RES		FCh
B5h	R/W	Fan Tach 1 Limit MSB	TLIMIT1[13:6]								FFh
B6h	R/W	Fan Tach 2 Limit LSB	TLIMIT2[5:0]						RES		FCh
B7h	R/W	Fan Tach 2 Limit MSB	TLIMIT2[13:6]								FFh
B8h	R/W	Fan Tach 3 Limit LSB	TLIMIT3[5:0]						RES		FCh
B9h	R/W	Fan Tach 3 Limit MSB	TLIMIT1[13:6]								FFh
BAh	R/W	Fan Tach 4 Limit LSB	TLIMIT4[5:0]						RES		FCh
BBh	R/W	Fan Tach 4 Limit MSB	TLIMIT4[13:6]								FFh

If a tachometer reading exceeds its limit (as defined by these registers) the corresponding bit is set in the Host and BMC Error Status registers. The fan tachometer readings can be associated with a particular PWM output, but the tach errors are not automatically masked when a PWM is at 0% or set to level that causes the fan RPM to be below the limit purposely. In order to prevent false errors, care needs to be taken to make sure that the Fan Tach Limits are properly set. Errors are never generated for a fan if its limit is set to 3FFFh.

3.17.8 SETUP REGISTERS

3.17.8.1 Register BCh Special Function Control 1 (Voltage Hysteresis and Fan Control Filter Enable)

Register Address	Read/ Write	Register Name	Bit 7	Bit 6	Bit 5	Bit 4	Bit 3	Bit 2	Bit 1	Bit 0	Default Value
BCh	R/W	Special Function Control 1	RES	FCFE2	FCFE1	LCFE2	LCFE1	VH			00h

Bit	Name	R/W	Description
2:0	VH	R/W	Voltage hysteresis control. This determines the amount of hysteresis to be applied to all voltage limit comparisons. It applies to both high and low limits. One LSB equals one A/D count, so the actual voltage represented by one LSB depends on the voltage channel.
3	LCFE1	R/W	Limit Comparison Filter Enable. Setting this bit causes limit comparisons for temperature zone 1 to use the filtered (spike smoothed) temperature instead of the unfiltered temperature.
4	LCFE2	R/W	Limit Comparison Filter Enable. Setting this bit causes limit comparisons for temperature zone 2 to use the filtered (spike smoothed) temperature instead of the unfiltered temperature.
5	FCFE1	R/W	Fan Control Filter Enable. Setting this bit causes fan control functions for zone 1 (including fan boost) to use the filtered (spike smoothed) temperature instead of the unfiltered temperature.
6	FCFE2	R/W	Fan Control Filter Enable. Setting this bit causes fan control functions for zone 2 (including fan boost) to use the filtered (spike smoothed) temperature instead of the unfiltered temperature.
7	RES	R	Reserved

In order for the LCFE1, LCFE2, FCFE1 and FCFE2 bits to work correctly, the ZN1E and ZN2E bits in the Zones 1/2 Spike Smoothing Control register should be cleared.

Application Note: If hysteresis for voltage limit comparisons is non-zero, special care needs to be taken when changing the voltage limit registers while a voltage error condition exists. If software relaxes the voltage limits in an attempt to prevent an error condition, it may be necessary to relax the limits by an amount greater than the hysteresis value and wait several milliseconds before attempting to clear the error status bit for the given voltage channel. Once the error status bit has been cleared, the desired limit(s) can be programmed.

3.17.8.2 Register BDh Special Function Control 2 (Smart Tach Mode Enable and Fan Control Temperature Resolution Control)

Register Address	Read/ Write	Register Name	Bit 7	Bit 6	Bit 5	Bit 4	Bit 3	Bit 2	Bit 1	Bit 0	Default Value
BDh	R/W	Special Function Control 2	RES	RES	ZN34 _RS	ZN12 _RS	STE4	STE3	STE2	STE1	00h

Bit	Name	R/W	Description
0	STE1	R/W	Enable Smart Tach for Tach 1
1	STE2	R/W	Enable Smart Tach for Tach 2
2	STE3	R/W	Enable Smart Tach for Tach 3
3	STE4	R/W	Enable Smart Tach for Tach 4
4	ZN12_RS	R/W	When this bit is set, the auto fan control will use 0.5°C of resolution for zones 1 and 2
5	ZN34_RS	R/W	When this bit is set, the auto fan control will use 0.5°C of resolution for zones 3 and 4
6	RES	R	Reserved
7	RES	R	Reserved

Copyright © 2003–2013, Texas Instruments Incorporated

Application Note: Enabling Smart Tach mode is not supported while either PWM output is configured for 22.5 kHz. The behavior of the part is undefined if this configuration is programmed. Register E0h Special Function TACH to PWM Binding must be setup when Smart Tach modes are enabled.

3.17.8.3 Register BEh GPI/VID Level Control

Register Address	Read/ Write	Register Name	Bit 7	Bit 6	Bit 5	Bit 4	Bit 3	Bit 2	Bit 1	Bit 0	Default Value
BEh	R/W	GPI/VID Level Control	GPI7 _LVL	GPI6 _LVL	GPI5 _LVL	GPI4 _LVL	RES		P2_VID _LVL	P1_VID _LVL	00h

Bit	Name	R/W	Description
0	P1_VID_LVL	R/W	If set, P1_VIDx inputs use alternate lower V_{IH} and V_{IL} levels
1	P2_VID_LVL	R/W	If set, P2_VIDx inputs use alternate lower V_{IH} and V_{IL} levels
3:2	RES	R	Reserved
4	GPI4_LVL	R/W	If set, GPIO4 input use alternate lower V_{IH} and V_{IL} levels
5	GPI5_LVL	R/W	If set, GPIO5 input use alternate lower V_{IH} and V_{IL} levels
6	GPI6_LVL	R/W	If set, GPIO6 input use alternate lower V_{IH} and V_{IL} levels
7	GPI7_LVL	R/W	If set, GPIO7 input use alternate lower V_{IH} and V_{IL} levels

See the DC Electrical Characteristics for exact V_{IH} and V_{IL} levels.

3.17.8.4 Register BFh PWM Ramp Control

Register Address	Read/ Write	Register Name	Bit 7	Bit 6	Bit 5	Bit 4	Bit 3	Bit 2	Bit 1	Bit 0	Default Value
BFh	R/W	PWM Ramp Control	PH_RAMP				VRD_RAMP				00h

Bit	Name	R/W	Description
3:0	VRD_RAMP	R/W	Sets the time delay between ramp steps for the $\overline{\text{VRDx_HOT}}$ ramp up/ramp down PWM function.
7:4	PH_RAMP	R/W	Sets the time delay between ramp steps for the $\overline{\text{Px_PROCHOT}}$ ramp up/ramp down PWM function.

If the time delay between steps is set to 0 ms, the PWM duty cycle goes immediately to 100% instead of ramping up gradually.

VRD_RAMP or PH_RAMP	Time Delay between Ramp Steps
0h	0 ms
1h	50 ms
2h	100 ms
3h	150 ms
4h	200 ms
5h	250 ms
6h	300 ms
7h	350 ms
8h	400 ms
9h	450 ms
Ah	500 ms
Bh	550 ms
Ch	600 ms
Dh	650 ms

VRD_RAMP or PH_RAMP	Time Delay between Ramp Steps
Eh	700 ms
Fh	750 ms

3.17.8.5 Register C0h Fan Boost Hysteresis (Zones 1/2)

Register Address	Read/ Write	Register Name	Bit 7	Bit 6	Bit 5	Bit 4	Bit 3	Bit 2	Bit 1	Bit 0	Default Value
C0h	R/W	Fan Boost Hysteresis (Zones 1/2)	H2				H1				44h

Bit	Name	R/W	Description
3:0	H1	R/W	Sets the fan boost hysteresis for zone 1
7:4	H2	R/W	Sets the fan boost hysteresis for zone 2

If the temperature zone is above fan boost temperature and then drops below the fan boost temperature, the following occurs: the PWM output remains at 100% until the temperature goes a certain amount below the fan boost temperature. These hysteresis registers control this amount and can be set anywhere from 0°C to 15°C (unsigned).

3.17.8.6 Register C1h Fan Boost Hysteresis (Zones 3/4)

Register Address	Read/ Write	Register Name	Bit 7	Bit 6	Bit 5	Bit 4	Bit 3	Bit 2	Bit 1	Bit 0	Default Value
C1h	R/W	Fan Boost Hysteresis (Zones 3/4)	H4				H3				44h

Bit	Name	R/W	Description
3:0	H3	R/W	Sets the fan boost hysteresis for zone 3
7:4	H4	R/W	Sets the fan boost hysteresis for zone 4

If the temperature zone is above fan boost temperature and then drops below the fan boost temperature, the following occurs: the PWM output remains at 100% until the temperature goes a certain amount below the fan boost temperature. These hysteresis registers control this amount and can be set anywhere from 0°C to 15°C (unsigned).

3.17.8.7 Register C2h Zones 1/2 Spike Smoothing Control

Register Address	Read/ Write	Register Name	Bit 7	Bit 6	Bit 5	Bit 4	Bit 3	Bit 2	Bit 1	Bit 0	Default Value
C2h	R/W	Zones 1/2 Spike Smoothing Control	ZN2E	ZN2			ZN1E	ZN1			00h

Bit	Name	R/W	Description
2:0	ZN1	R/W	Configures the spike smoothing characteristics for zone 1
3	ZN1E	R/W	When set, the filtered temperature for zone 1 is used for both limit checking and auto-fan control instead of the unfiltered temperature. Even when this bit is cleared, the filtered temperature can be read by software from the filtered temperature register.
6:4	ZN2	R/W	Configures the spike smoothing characteristics for zone 2

Copyright © 2003–2013, Texas Instruments Incorporated

Bit	Name	R/W	Description
7	ZN2E	R/W	When set, the filtered temperature for zone 2 is used for both limit checking and auto-fan control instead of the unfiltered temperature. Even when this bit is cleared, the filtered temperature can be read by software from the filtered temperature register.

If the REMOTE1 or REMOTE2 pins are connected to a processor or chipset, instantaneous temperature spikes may be sampled by the LM93. If these spikes are not ignored, the PWM outputs may cause the fans to turn on prematurely and produce unpleasant noise. Also, false error events may occur. For this reason, any zone that is connected to a chipset or processor may need spike smoothing enabled. The spike smoothing provides additional filtering above and beyond any ΣΔ A/D inherent averaging.

When spike smoothing is enabled, the temperature reading registers still reflect the current value of the temperature—not the filtered value. Only the filtered temperature registers reflect the filtered value.

ZN1 or ZN2	Spike Smoothed Over
0h	11.8 seconds
1h	7.0 seconds
2h	4.4 seconds
3h	3.0 seconds
4h	1.6 seconds
5h	0.8 seconds
6h	0.6 seconds
7h	0.4 seconds

3.17.8.8 Register C3h Zones 1/2 MinPWM and Hysteresis

Register Address	Read/ Write	Register Name	Bit 7	Bit 6	Bit 5	Bit 4	Bit 3	Bit 2	Bit 1	Bit 0	Default Value
C3h	R/W	Zones 1/2 MinPWM and Hysteresis	MinPWM				FC_TH				N/D

Bit	Name	R/W	Description
3:0	FC_TH	R/W	This field sets the amount of hysteresis (in degrees C) that is used by the auto-fan control for zones 1 and 2. This should be set greater than 0 to avoid unwanted oscillation between two steps in the look-up table.
7:4	MinPWM	R/W	This field determines the duty cycle that the auto-fan control requests for zones 1 and 2 if the temperature for the given zone falls below the programmed base temperature for that zone. This field accepts 16 possible values that are mapped to duty cycles according the table in the Auto-Fan Control section.

3.17.8.9 Register C4h Zones 3/4 MinPWM and Hysteresis

Register Address	Read/ Write	Register Name	Bit 7	Bit 6	Bit 5	Bit 4	Bit 3	Bit 2	Bit 1	Bit 0	Default Value
C4h	R/W	Zones 3/4 MinPWM and Hysteresis	MinPWM				FC_TH				N/D

Bit	Name	R/W	Description
3:0	FC_TH	R/W	This field sets the amount of hysteresis (in degrees C) that is used by the auto-fan control for zones 3 and 4. This should be set greater than 0 to avoid unwanted oscillation between two steps in the look-up table.
7:4	MinPWM	R/W	This field determines the duty cycle that the auto-fan control requests for zones 3 and 4 if the temperature for the given zone falls below the programmed base temperature for that zone. This field accepts 16 possible values that are mapped to duty cycles according the table in the Auto-Fan Control section.

3.17.8.10 Register C5h GPO

Register Address	Read/ Write	Register Name	Bit 7	Bit 6	Bit 5	Bit 4	Bit 3	Bit 2	Bit 1	Bit 0	Default Value
C5h	R/W	GPO	GPO7	GPO6	GPO5	GPO4	GPO3	GPO2	GPO1	GPO0	00h

Bit	Name	R/W	Description
0	GPO0	R/W	If set, GPIO_0 will be pulled low. If cleared, the output is not pulled low. This bit should be 0 if GPIO_0 is being used as an input.
1	GPO1	R/W	If set, GPIO_1 will be pulled low. If cleared, the output is not pulled low. This bit should be 0 if GPIO_1 is being used as an input.
2	GPO2	R/W	If set, GPIO_2 will be pulled low. If cleared, the output is not pulled low. This bit should be 0 if GPIO_2 is being used as an input.
3	GPO3	R/W	If set, GPIO_3 will be pulled low. If cleared, the output is not pulled low. This bit should be 0 if GPIO_3 is being used as an input.
4	GPO4	R/W	If set, GPIO_4 will be pulled low. If cleared, the output is not pulled low. This bit should be 0 if GPIO_4 is being used as an input.
5	GPO5	R/W	If set, GPIO_5 will be pulled low. If cleared, the output is not pulled low. This bit should be 0 if GPIO_5 is being used as an input.
6	GPO6	R/W	If set, GPIO_6 will be pulled low. If cleared, the output is not pulled low. This bit should be 0 if GPIO_6 is being used as an input.
7	GPO7	R/W	If set, GPIO_7 will be pulled low. If cleared, the output is not pulled low. This bit should be 0 if GPIO_7 is being used as an input.

3.17.8.11 Register C6h PROCHOT Override

Register Address	Read/ Write	Register Name	Bit 7	Bit 6	Bit 5	Bit 4	Bit 3	Bit 2	Bit 1	Bit 0	Default Value
C6h	R/W	$\overline{\text{PROCHOT}}$ Override	FORCE_P1	FORCE_P2	RES		PHT_DC				00h

Bit	Name	R/W	Description
3:0	PHT_DC	R/W	$\overline{\text{PROCHOT}}$ duty cycle select.
5:4	RES	R	Reserved
6	FORCE_P1	R/W	When this is set by software, $\overline{\text{P1_PROCHOT}}$ will be asserted by the LM93 with the duty cycle selected by PHT_DC.
7	FORCE_P2	R/W	When this is set by software, $\overline{\text{P2_PROCHOT}}$ will be asserted by the LM93 with the duty cycle selected by PHT_DC.

Note that if the $\overline{\text{P1P2_PROCHOT}}$ bit is set to short the $\overline{\text{Px_PROCHOT}}$ pins together, both $\overline{\text{Px_PROCHOT}}$ outputs will be driven together, even if only one of the FORCE_Px bits is set.

The period of the PWM signal driven on $\overline{\text{Px_PROCHOT}}$ is 3.56 ms (80 internal 22.5 kHz clocks). The asserted time can be increased in 5 clock increments. 5 clocks is about 220 µs and would represent 6.25% percent throttled.

Possible settings for PHT_DC:

Copyright © 2003–2013, Texas Instruments Incorporated

PHT_DC	Asserted Period
0h	5 clocks
1h	10 clocks
2h	15 clocks
3h	20 clocks
4h	25 clocks
5h	30 clocks
6h	35 clocks
7h	40 clocks
8h	45 clocks
9h	50 clocks
Ah	55 clocks
Bh	60 clocks
Ch	65 clocks
Dh	70 clocks
Eh	75 clocks
Fh	80 clocks

3.17.8.12 Register C7h PROCHOT Time Interval

Register Address	Read/ Write	Register Name	Bit 7	Bit 6	Bit 5	Bit 4	Bit 3	Bit 2	Bit 1	Bit 0	Default Value
C7h	R/W	PROCHOT Time Interval	P2_TI				P1_TI				11h

Bit	Name	R/W	Description
3:0	P1_TI	R/W	Sets the monitoring interval for $\overline{\text{P1_PROCHOT}}$
7:4	P2_TI	R/W	Sets the monitoring interval for $\overline{\text{P2_PROCHOT}}$

Possible settings for P1_TI and P2_TI:

P1_TI or P2_TI	Monitoring Time Interval (seconds)
0h	0.73
1h	1.46
2h	2.9
3h	5.8
4h	11.7
5h	23.3
6h	46.6
7h	93.2
8h	186
9h	372
Ah–Fh	Reserved

Copyright © 2003–2013, Texas Instruments Incorporated

Note that changing this value while $\overline{\text{PROCHOT}}$ measurements are running may cause the monitoring circuit to produce a erroneous value. To avoid alerts and invalid B_Px_PROCHOT or B_Px_PROCHOT Error Status values, only change this value while the chip is programmed for S3 or S4/5.

3.17.8.13 Register C8h PWM1 Control 1

Register Address	Read/ Write	Register Name	Bit 7	Bit 6	Bit 5	Bit 4	Bit 3	Bit 2	Bit 1	Bit 0	Default Value
C8h	R/W	PWM1 Control 1	VRD2	VRD1	PH2	PH1	ZN4	ZN3	ZN2	ZN1	0Fh

Bit	Name	R/W	Description
0	ZN1	R/W	If set, PWM1 will be bound to temperature zone 1.
1	ZN2	R/W	If set, PWM1 will be bound to temperature zone 2.
2	ZNE	R/W	If set, PWM1 will be bound to temperature zone 3.
3	ZN4	R/W	If set, PWM1 will be bound to temperature zone 4.
4	PH1	R/W	If set, PWM1 will be bound to $\overline{\text{P1_PROCHOT}}$.
5	PH2	R/W	If set, PWM1 will be bound to $\overline{\text{P2_PROCHOT}}$.
6	VRD1	R/W	If set, PWM1 will be bound to $\overline{\text{VRD1_HOT1}}$.
7	VRD2	R/W	If set, PWM1 will be bound to $\overline{\text{VRD1_HOT2}}$.

This register can bind PWM1 to several different control sources. The temperature zones control the PWM duty cycle using the table lookup function. The $\overline{\text{Px_PROCHOT}}$ and $\overline{\text{VRDx_HOT}}$ inputs control the PWM using the ramp up/ramp down functions. If multiple control sources are bound to PWM1, the largest duty cycle being requested will be used.

3.17.8.14 Register C9h PWM1 Control 2

Register Address	Read/ Write	Register Name	Bit 7	Bit 6	Bit 5	Bit 4	Bit 3	Bit 2	Bit 1	Bit 0	Default Value
C9h	R/W	PWM1 Control 2	OVR_DC				PL	EPPL	INV	OVR	00h

Bit	Name	R/W	Description
0	OVR	R/W	When set, enables manual duty cycle override for PWM1.
1	INV	R/W	Invert PWM1 output. When 0, 100% duty cycle corresponds to the PWM output continuously HIGH. When 1, 100% duty cycle corresponds to the PWM output continuously LOW.
2	EPPL	R/W	Enable PROCHOT PWM1 lock. When set, this bit causes bound PROCHOT events on PWM1 to trigger PPL (bit [3]). When cleared, PPL never gets set.
3	PPL	R/W	PROCHOT PWM1 lock. When set, this bit indicates that PWM1 is currently being held at 100% because a bound PROCHOT event occurred while EPPL (bit [2]) was set. This bit is cleared by writing a zero. Clearing this bit allows the fans to return to normal operation. This bit is not locked by the LOCK bit in the LM93 Configuration register.
7:4	OVR_DC	R/W	This field sets the duty cycle that will be used by PWM1 whenever manual override mode is active. This field accepts 16 possible values that are mapped to duty cycles according the table in the FAN CONTROL section. Whenever this register is read, it returns the duty cycle that is currently being used by PWM1 regardless of whether override mode is active or not. The value read may not match the last value written if another control source is requesting a greater duty cycle. This field always returns 0h when the PWM1 spin up cycle is active.

3.17.8.15 Register CAh PWM1 Control 3

Register Address	Read/ Write	Register Name	Bit 7	Bit 6	Bit 5	Bit 4	Bit 3	Bit 2	Bit 1	Bit 0	Default Value
CAh	R/W	PWM1 Control 3	SU_DUR			RES	SU_DC				00h

Copyright © 2003–2013, Texas Instruments Incorporated

Bit	Name	R/W	Description
3:0	SU_DC	R/W	This field sets the duty cycle that will be used whenever PWM1 experiences a Spin-Up cycle. This field accepts 16 possible values that are mapped to duty cycles according the table in the Auto-Fan Control section. Setting this field to 0h will effectively disable Spin-Up.
4	RES	R	Reserved
7:5	SU_DUR	R/W	Sets the Spin-Up duration for PWM1.

Bits 7:5 configure the spin-up duration. When the duty cycle of PWM1 changes from zero to a non-zero value, the spin-up sequence is activated for the specified amount of time. The available settings are defined according to this table:

SU_DUR	Spin-Up Time
0h	Spin-up disabled
1h	100 ms
2h	250 ms
3h	400 ms
4h	700 ms
5h	1000 ms
6h	2000 ms
7h	4000 ms

3.17.8.16 Register CBh Special Function PWM1 Control 4

Register Address	Read/ Write	Register Name	Bit 7	Bit 6	Bit 5	Bit 4	Bit 3	Bit 2	Bit 1	Bit 0	Default Value
CBh	R/W	Special Function PWM1 Control 4	RES	RES	RES	RES	RES	FREQ1			00h

Bit	Name	R/W	Description
2:0	FREQ1	R/W	PWM1 frequency control. Setting this value controls the frequency of the PWM1 output according to the table below.
7:3	RES	R	Reserved

FREQ1 or FREQ2	Frequency of PWM1 or PWM2 (Hz)
0h	22500
1h	96
2h	84
3h	72
4h	60
5h	48
6h	36
7h	12

3.17.8.17 Register CCh PWM2 Control 1

Register Address	Read/ Write	Register Name	Bit 7	Bit 6	Bit 5	Bit 4	Bit 3	Bit 2	Bit 1	Bit 0	Default Value
CCh	R/W	PWM2 Control 1	VRD2	VRD1	PH2	PH1	ZN4	ZN3	ZN2	ZN1	0Fh

Copyright © 2003–2013, Texas Instruments Incorporated

Bit	Name	R/W	Description
0	ZN1	R/W	If set, PWM2 will be bound to temperature zone 1.
1	ZN2	R/W	If set, PWM2 will be bound to temperature zone 2.
2	ZN3	R/W	If set, PWM2 will be bound to temperature zone 3.
3	ZN4	R/W	If set, PWM2 will be bound to temperature zone 4.
4	PH1	R/W	If set, PWM2 will be bound to $\overline{\text{P1_PROCHOT}}$.
5	PH2	R/W	If set, PWM2 will be bound to $\overline{\text{P2_PROCHOT}}$.
6	VRD1	R/W	If set, PWM2 will be bound to $\overline{\text{VRD1_HOT}}$.
7	VRD2	R/W	If set, PWM2 will be bound to $\overline{\text{VRD2_HOT}}$.

This register can bind PWM2 to several different control sources. The temperature zones control the PWM duty cycle using the table lookup function. The $\overline{\text{Px_PROCHOT}}$ and $\overline{\text{VRDx_HOT}}$ inputs control the PWM using the ramp up/ramp down functions. If multiple control sources are bound to PWM2, the largest duty cycle being requested will be used.

3.17.8.18 Register CDh PWM2 Control 2

Register Address	Read/ Write	Register Name	Bit 7	Bit 6	Bit 5	Bit 4	Bit 3	Bit 2	Bit 1	Bit 0	Default Value
CDh	R/W	PWM2 Control 2	OVR_DC				PL	EPPL	INV	OVR	00h

Bit	Name	R/W	Description
0	OVR	R/W	When set, enables manual duty cycle override for PWM2.
1	INV	R/W	Invert PWM1 output. When 0, 100% duty cycle corresponds to the PWM output continuously HIGH. When 1, 100% duty cycle corresponds to the PWM output continuously LOW.
2	EPPL	R/W	Enable PROCHOT PWM2 lock. When set, this bit causes bound PROCHOT events on PWM2 to trigger PPL (bit [3]). When cleared, PPL never gets set.
3	PPL	R/W	PROCHOT PWM2 lock. When set, this bit indicates that PWM2 is currently being held at 100% because a bound PROCHOT event occurred while EPPL (bit [2]) was set. This bit is cleared by writing a zero. Clearing this bit allows the fans to return to normal operation. This bit is not locked by the LOCK bit in the LM93 Configuration register.
7:4	OVR_DC	R/W	This field sets the duty cycle that will be used by PWM2 whenever manual override mode is active. This field accepts 16 possible values that are mapped to duty cycles according the table in the FAN CONTROL section. Whenever this register is read, it returns the duty cycle that is currently being used by PWM2 regardless of whether override mode is active or not. The value read may not match the last value written if another control source is requesting a greater duty cycle. This field always returns 0h when the PWM2 spin up cycle is active.

3.17.8.19 Register CEh PWM2 Control 3

Register Address	Read/ Write	Register Name	Bit 7	Bit 6	Bit 5	Bit 4	Bit 3	Bit 2	Bit 1	Bit 0	Default Value
CEh	R/W	PWM2 Control 3	SU_DUR			RES	SU_DC				00h

Bit	Name	R/W	Description
3:0	SU_DC	R/W	This field sets the duty cycle that used whenever PWM2 experiences a Spin-Up cycle. This field accepts 16 possible values that are mapped to duty cycles according the table in the Auto-Fan Control section. Setting this field to 0h effectively disables Spin-Up.
4	RES	R	Reserved
7:5	SU_DUR	R/W	Sets the Spin-Up duration for PWM2.

Bits 7:5 configure the spin-up duration. When the duty cycle of PWM2 changes from zero to a non-zero value, the spin-up sequence is activated for the specified amount of time. The available settings are defined according to this table:

Copyright © 2003–2013, Texas Instruments Incorporated

SU_DUR	Spin-Up Time
0h	Spin-up disabled
1h	100 ms
2h	250 ms
3h	400 ms
4h	700 ms
5h	1000 ms
6h	2000 ms
7h	4000 ms

3.17.8.20 Register CFh Special Function PWM2 Control 4

Register Address	Read/ Write	Register Name	Bit 7	Bit 6	Bit 5	Bit 4	Bit 3	Bit 2	Bit 1	Bit 0	Default Value
CFh	R/W	Special Function PWM2 Control 4	RES	RES	RES	RES	RES	FREQ2			00h

Bit	Name	R/W	Description
2:0	FREQ2	R/W	PWM2 frequency control. Controls the frequency of the PWM2 output in the same fashion as FREQ1 in the PWM1 Control 4 register.
7:3	RES	R	Reserved

3.17.8.21 Register D0h–D3h Zone 1 to 4 Base Temperatures

Register Address	Read/ Write	Register Name	Bit 7	Bit 6	Bit 5	Bit 4	Bit 3	Bit 2	Bit 1	Bit 0	Default Value
D0h	R/W	Zone 1 Base Temperat ure	7	6	5	4	3	2	1	0	N/D
D1h	R/W	Zone 2 Base Temperat ure	7	6	5	4	3	2	1	0	N/D
D2h	R/W	Zone 3 Base Temperat ure	7	6	5	4	3	2	1	0	N/D
D3h	R/W	Zone 4 Base Temperat ure	7	6	5	4	3	2	1	0	N/D

The value in this register is used as the base in the temperature calculation for the auto fan control look-up table. These registers use the standard temperature format (8-bit signed data). The look-up table contains the temperature offsets. The offsets are added to the base temperature to determine the true temperature to be used for each table entry for auto fan control.

3.17.8.22 Register D4h–DFh Lookup Table Steps—Zone 1/2 and Zone 3/4 Offset Temperature

Register Address	Read/ Write	Register Name	Bit 7	Bit 6	Bit 5	Bit 4	Bit 3	Bit 2	Bit 1	Bit 0	Default Value
D4h	R/W	Step 2 Temp Offset	Z3/4_STEP2				Z1/2_STEP2				N/D
D5h	R/W	Step 3 Temp Offset	Z3/4_STEP3				Z1/2_STEP3				N/D

Copyright © 2003–2013, Texas Instruments Incorporated

Register Address	Read/ Write	Register Name	Bit 7	Bit 6	Bit 5	Bit 4	Bit 3	Bit 2	Bit 1	Bit 0	Default Value
D6h	R/W	Step 4 Temp Offset	Z3/4_STEP4				Z1/2_STEP4				N/D
D7h	R/W	Step 5 Temp Offset	Z3/4_STEP5				Z1/2_STEP5				N/D
D8h	R/W	Step 6 Temp Offset	Z3/4_STEP6				Z1/2_STEP6				N/D
D9h	R/W	Step 7 Temp Offset	Z3/4_STEP7				Z1/2_STEP7				N/D
DAh	R/W	Step 8 Temp Offset	Z3/4_STEP8				Z1/2_STEP8				N/D
DBh	R/W	Step 9 Temp Offset	Z3/4_STEP9				Z1/2_STEP9				N/D
DCh	R/W	Step 10 Temp Offset	Z3/4_STEP10				Z1/2_STEP10				N/D
DDh	R/W	Step 11 Temp Offset	Z3/4_STEP11				Z1/2_STEP11				N/D
DEh	R/W	Step 12 Temp Offset	Z3/4_STEP12				Z1/2_STEP12				N/D
DFh	R/W	Step 13 Temp Offset	Z3/4_STEP13				Z1/2_STEP13				N/D

There are two look up tables of 13 steps (12 offsets), one for Zones 1 and 2 the other for Zones 3 and 4. Each 8-bit offset register contains the offset temperature for Zones 1 and 2 as well as the offset temperature for Zones 3 and 4. The format for the offsets is a 4-bit unsigned value, and one LSB = 1°C.

See the FAN CONTROL for information on how the base temperature/lookup table should be used for controlling the PWM output(s).

3.17.8.23 Register E0h Special Function TACH to PWM Binding

Register Address	Read/ Write	Register Name	Bit 7	Bit 6	Bit 5	Bit 4	Bit 3	Bit 2	Bit 1	Bit 0	Default Value
E0h	R/W	Special Function TACH to PWM Binding	T4P2	T4P1	T3P2	T3P1	T2P2	T2P1	T1P2	T1P1	00h

Bit	Name	R/W	Description
0	T1P1	R/W	If set, TACH1 is bound to PWM1.
1	T1P2	R/W	If set, TACH1 is bound to PWM2.
2	T2P1	R/W	If set, TACH2 is bound to PWM1.
3	T2P2	R/W	If set, TACH2 is bound to PWM2.
4	T3P1	R/W	If set, TACH3 is bound to PWM1.
5	T3P2	R/W	If set, TACH3 is bound to PWM2.
6	T4P1	R/W	If set, TACH4 is bound to PWM1.
7	T4P2	R/W	If set, TACH4 is bound to PWM2.

Copyright © 2003–2013, Texas Instruments Incorporated

If a TACH channel is bound to a PWM channel, TACH errors on that channel are automatically masked when the bound PWM is at 0% duty cycle or performing spin-up. Behavior is undefined if a TACH channel is bound to both PWM outputs. This register must be setup when Smart Tach Mode is enabled in register BDh, Special Function Control 2.

3.17.8.24 Register E2h LM93 Status Control

Register Address	Read/ Write	Register Name	Bit 7	Bit 6	Bit 5	Bit 4	Bit 3	Bit 2	Bit 1	Bit 0	Default Value
E2h	R/W	LM93 Status/ Control	BMC _ERR	HOST _ERR	TACH_EDGE		GPI5_A M	GPI4_AM	ASF	OVRID	00h

Lock	Bit	Name	R/W	Description
	0	OVRID	R/W	If this bit is set, all PWM outputs go to 100% duty cycle.
X	1	ASF	R/W	If this bit is set, BMC error registers support ASF, i.e. reset on read. When not in ASF mode, a write “1” is required to clear the bits in the BMC error status registers.
	2	GPI4_AM	R/W	GPI4 Auto Mask Enable If this bit is set, an error event on GPI4 causes all other error events to be masked. The BMC Error Status registers do not reflect any new error events until the GPI4_ERR bit is cleared in the B_GPI Error Status register. The HOST Error Status registers do not reflect any new error events until the GPI4_ERR bit is cleared in the H_GPI Error Status register. If a $\overline{\text{CPU_THERMTRIP}}$ signal is connected to GPIO4, this ensures that unwanted error events do not fire once $\overline{\text{CPU_THERMTRIP}}$ is asserted.
	3	GP15_AM	R/W	GPI5 Auto Mask Enable This bit works exactly the same as GPI4_AM, but applies to GPI5.
	5:4	TACH_EDGE	R/W	This field determines what type of edges are used for measuring fan tach pulses. This effects all four tachometer inputs.
	6	HOST_ERR	R	This bit gets set if any error bit is set in any of the Host Error Status registers (H_).
	7	BMC_ERR	R	This bit gets set if any error bit is set in any of the BMC Error Status registers (B_). When this bit is set, $\overline{\text{ALERT}}$ are asserted if enabled.

TACH_EDGE	Edge Type Used for Tachometer Measurements
0h	Either rising or falling edges may be used.
1h	Rising edges only
2h	Falling edges only
3h	Reserved

3.17.8.25 Register E3h LM93 Configuration

Register Address	Read/ Write	Register Name	Bit 7	Bit 6	Bit 5	Bit 4	Bit 3	Bit 2	Bit 1	Bit 0	Default Value
E3h	R/W	LM93 Configura tion	READY	RES		P1P2_ PROCHO T	ALERT _EN	GMSK	LOCK	START	00h

Lock	Bit	Name	R/W	Description
x	0	START	R/W	When this bit is 0, the LM93 operates in basic mode. **All** error events are masked. The auto fan control algorithm is disabled. Both PWMs are set to 0%, but the Fan Boost function operates based on default limits. All monitoring functions are active and the value registers are updated. Once this bit is set, error events are no longer globally masked, and the auto-fan control algorithm is enabled. Fan boost uses the programmed values instead of the defaults. It is expected that all limit and setup registers are set by BIOS or application software prior to setting this bit.

Lock	Bit	Name	R/W	Description
X	1	LOCK	R/W	Setting this bit locks all registers and register bits that are indicated as lockable. Lockable registers have an "**x**" in the **Lock** column of their description. This register is locked once it is set. This bit can only be cleared by an external device asserting $\overline{\text{RESET}}$.
	2	GMSK	R/W	Global Mask When this bit is set by software, **all** error events are masked. Setting this bit does not effect any other mask registers or value registers.
	3	ALERT_EN	R/W	When this bit is set, the $\overline{\text{ALERT}}$ output is enabled. If this bit is cleared, the $\overline{\text{ALERT}}$ output is disabled.
	4	P1P2_ PROCHOT	R/W	In some configurations it may be required to have both processors throttling at the same rate. When this bit is set, the LM93 connects $\overline{\text{P1_PROCHOT}}$ to $\overline{\text{P2_PROCHOT}}$. If $\overline{\text{P1_PROCHOT}}$ and $\overline{\text{P2_PROCHOT}}$ are already shorted by some other means, this bit should NOT be set. Doing so would cause both $\overline{\text{PROCHOT}}$ signals to be stuck low until this bit is cleared.
	6:5	RES	R/W	Reserved
	7	READY	R	The LM93 sets this bit automatically after valid data has been collected for all temperatures and voltages. Software should not use any temperature or voltage values until this bit has been set.

3.17.9 SLEEP STATE CONTROL AND MASK REGISTERS

3.17.9.1 Register E4h Sleep State Control

Register Address	Read/ Write	Register Name	Bit 7	Bit 6	Bit 5	Bit 4	Bit 3	Bit 2	Bit 1	Bit 0	Default Value
E4h	R	Sleep State Control	RES						SB		07h

Bit	Name	R/W	Description
1:0	SB	R/W	Sleep State Control. Setting this field tells the LM93 which sleep state the system is in. Several error events are masked depending on the state of this field.
7:2	RES	R	Reserved

SB	Description
00	Sleep state = S0 Do not mask errors.
01	Sleep state = S1 Mask errors according to S1 mask registers and standard S1 masking.
10	Sleep state = S3 Mask errors according to S3 mask registers and standard S3 masking.
11	Sleep state = S4/5 Mask errors according to S4/5 mask registers and standard S4/5 masking. This mode is activated automatically if the $\overline{\text{RESET}}$ input is asserted.

3.17.9.2 Register E5h S1 GPI Mask

Register Address	Read/ Write	Register Name	Bit 7	Bit 6	Bit 5	Bit 4	Bit 3	Bit 2	Bit 1	Bit 0	Default Value
E5h	R/W	S1 GPI Mask	GPI7_S1 _MSK	GPI6_S1 _MSK	GPI5_S1 _MSK	GPI4_S1 _MSK	GPI3_S1 _MSK	GPI2_S1 _MSK	GPI1_S1 _MSK	GPI0_S1 _MSK	FFh

Copyright © 2003–2013, Texas Instruments Incorporated

Bit	Name	R/W	Description
0	GPI0_S1_MSK	R/W	If set, GPI0 errors are masked in S1 sleep state.
1	GPI1_S1_MSK	R/W	If set, GPI1 errors are masked in S1 sleep state.
2	GPI2_S1_MSK	R/W	If set, GPI2 errors are masked in S1 sleep state.
3	GPI3_S1_MSK	R/W	If set, GPI3 errors are masked in S1 sleep state.
4	GPI4_S1_MSK	R/W	If set, GPI4 errors are masked in S1 sleep state.
5	GPI5_S1_MSK	R/W	If set, GPI5 errors are masked in S1 sleep state.
6	GPI6_S1_MSK	R/W	If set, GPI6 errors are masked in S1 sleep state.
7	GPI7_S1_MSK	R/W	If set, GPI7 errors are masked in S1 sleep state.

3.17.9.3 Register E6h S1 Tach Mask

Register Address	Read/ Write	Register Name	Bit 7	Bit 6	Bit 5	Bit 4	Bit 3	Bit 2	Bit 1	Bit 0	Default Value
E6h	R/W	S1 Tach Mask	RES				TACH4_ S1 _MSK	TACH3_ S1 _MSK	TACH2_ S1 _MSK	TACH1_ S1 _MSK	0Fh

Bit	Name	R/W	Description
0	TACH1_S1_MSK	R/W	If set, Tach1 errors are masked in S1 sleep state.
1	TACH2_S1_MSK	R/W	If set, Tach2 errors are masked in S1 sleep state.
2	TACH3_S1_MSK	R/W	If set, Tach3 errors are masked in S1 sleep state.
3	TACH4_S1_MSK	R/W	If set, Tach4 errors are masked in S1 sleep state.
7:4	RES	R	Reserved

3.17.9.4 Register E7h S3 GPI Mask

Register Address	Read/ Write	Register Name	Bit 7	Bit 6	Bit 5	Bit 4	Bit 3	Bit 2	Bit 1	Bit 0	Default Value
E7h	R/W	S3 GPI Mask	GPI7_S3 _MSK	GPI6_S3 _MSK	GPI5_S3 _MSK	GPI4_S3 _MSK	GPI3_S3 _MSK	GPI2_S3 _MSK	GPI1_S3 _MSK	GPI0_S3 _MSK	FFh

Bit	Name	R/W	Description
0	GPI0_S3_MSK	R/W	If set, GPI0 errors are masked in S3 sleep state.
1	GPI1_S3_MSK	R/W	If set, GPI1 errors are masked in S3 sleep state.
2	GPI2_S3_MSK	R/W	If set, GPI2 errors are masked in S3 sleep state.
3	GPI3_S3_MSK	R/W	If set, GPI3 errors are masked in S3 sleep state.
4	GPI4_S3_MSK	R/W	If set, GPI4 errors are masked in S3 sleep state.
5	GPI5_S3_MSK	R/W	If set, GPI5 errors are masked in S3 sleep state.
6	GPI6_S3_MSK	R/W	If set, GPI6 errors are masked in S3 sleep state.
7	GPI7_S3_MSK	R/W	If set, GPI7 errors are masked in S3 sleep state.

3.17.9.5 Register E8h S3 Tach Mask

Register Address	Read/ Write	Register Name	Bit 7	Bit 6	Bit 5	Bit 4	Bit 3	Bit 2	Bit 1	Bit 0	Default Value
E8h	R/W	S3 Tach Mask	RES				TACH4_ S3 _MSK	TACH3_ S3 _MSK	TACH2_ S3 _MSK	TACH1_ S3 _MSK	0Fh

Bit	Name	R/W	Description
0	TACH1_S3_MSK	R/W	If set, Tach1 errors are masked in S3 sleep state.
1	TACH2_S3_MSK	R/W	If set, Tach2 errors are masked in S3 sleep state.
2	TACH3_S3_MSK	R/W	If set, Tach3 errors are masked in S3 sleep state.
3	TACH4_S3_MSK	R/W	If set, Tach4 errors are masked in S3 sleep state.
7:4	RES	R	Reserved

Copyright © 2003–2013, Texas Instruments Incorporated

3.17.9.6 Register E9h S3 Temperature/Voltage Mask

Register Address	Read/ Write	Register Name	Bit 7	Bit 6	Bit 5	Bit 4	Bit 3	Bit 2	Bit 1	Bit 0	Default Value
E9h	R/W	S3 Voltage Mask	RES				TEMP_ S3_MSK	AIN14_S 3 _MSK	AIN13_S 3 _MSK	AIN12_S 3 _MSK	07h

Bit	Name	R/W	Description
0	AIN12_S3_MSK	R/W	If set, AIN12 errors as masked in S3 sleep state.
1	AIN13_S3_MSK	R/W	If set, AIN13 errors as masked in S3 sleep state.
2	AIN14_S3_MSK	R/W	If set, AIN14 errors as masked in S3 sleep state.
3	TEMP_S3_MSK	R/W	If set, temperature errors and diode fault errors for zones 1 and 2 are masked in S3 sleep state.
7:3	RES	R	Reserved

3.17.9.7 Register EAh S4/5 GPI Mask

Register Address	Read/ Write	Register Name	Bit 7	Bit 6	Bit 5	Bit 4	Bit 3	Bit 2	Bit 1	Bit 0	Default Value
EAh	R/W	S4/5 GPI Mask	GPI7 _S4/5 _MSK	GPI6 _S4/5 _MSK	GPI5 _S4/5 _MSK	GPI4 _S4/5 _MSK	GPI3 _S4/5 _MSK	GPI2 _S4/5 _MSK	GPI1 _S4/5 _MSK	GPI0 _S4/5 _MSK	FFh

Bit	Name	R/W	Description
0	GPI0_S4/5_MSK	R/W	If set, GPI0 errors are masked in S4/5 sleep state.
1	GPI1_S4/5_MSK	R/W	If set, GPI1 errors are masked in S4/5 sleep state.
2	GPI2_S4/5_MSK	R/W	If set, GPI2 errors are masked in S4/5 sleep state.
3	GPI3_S4/5_MSK	R/W	If set, GPI3 errors are masked in S4/5 sleep state.
4	GPI4_S4/5_MSK	R/W	If set, GPI4 errors are masked in S4/5 sleep state.
5	GPI5_S4/5_MSK	R/W	If set, GPI5 errors are masked in S4/5 sleep state.
6	GPI6_S4/5_MSK	R/W	If set, GPI6 errors are masked in S4/5 sleep state.
7	GPI7_S4/5_MSK	R/W	If set, GPI7 errors are masked in S4/5 sleep state.

3.17.9.8 Register EBh S4/5 Temperature/Voltage Mask

Register Address	Read/ Write	Register Name	Bit 7	Bit 6	Bit 5	Bit 4	Bit 3	Bit 2	Bit 1	Bit 0	Default Value
EBh	R/W	S4/5 Voltage Mask	RES				TEMP_ S4/5_MS K	AIN14_S 4/5 _MSK	AIN13_S 4/5 _MSK	AIN12_S 4/5 _MSK	07h

Bit	Name	R/W	Description
0	AIN12_S4/5_MSK	R/W	If set, AIN12 errors as masked in S4/5 sleep state.
1	AIN13_S4/5_MSK	R/W	If set, AIN13 errors as masked in S4/5 sleep state.
2	AIN14_S4/5_MSK	R/W	If set, AIN14 errors as masked in S4/5 sleep state.
3	TEMP_S4/5_MSK	R/W	If set, temperature errors and diode fault errors for zones 1 and 2 are masked in S4/5 sleep state.
7:3	RES	R	Reserved

3.17.10 OTHER MASK REGISTERS

3.17.10.1 Register ECh GPI Error Mask

Register Address	Read/ Write	Register Name	Bit 7	Bit 6	Bit 5	Bit 4	Bit 3	Bit 2	Bit 1	Bit 0	Default Value
ECh	R/W	GPI Error Mask	GPI7 _MSK	GPI6 _MSK	GPI5 _MSK	GPI4 _MSK	GPI3 _MSK	GPI2 _MSK	GPI1 _MSK	GPI0 _MSK	FFh

Copyright © 2003–2013, Texas Instruments Incorporated

Bit	Name	R/W	Description
0	GPI0_MSK	R/W	When this bit is set, GPI0 error events are masked.
1	GPI1_MSK	R/W	When this bit is set, GPI1 error events are masked.
2	GPI2_MSK	R/W	When this bit is set, GPI2 error events are masked.
3	GPI3_MSK	R/W	When this bit is set, GPI3 error events are masked.
4	GPI4_MSK	R/W	When this bit is set, GPI4 error events are masked.
5	GPI5_MSK	R/W	When this bit is set, GPI5 error events are masked.
6	GPI6_MSK	R/W	When this bit is set, GPI6 error events are masked.
7	GPI7_MSK	R/W	When this bit is set, GPI7 error events are masked.

These bits mask the corresponding bits in the B_ and H_GPI Error Status Registers. They do not effect the GPI State register.

3.17.10.2 Register EDh Miscellaneous Error Mask

Register Address	Read/ Write	Register Name	Bit 7	Bit 6	Bit 5	Bit 4	Bit 3	Bit 2	Bit 1	Bit 0	Default Value
EDh	R/W	Miscellaneous Error Mask	RES		DVccp2_MSK	DVccp1_MSK	SCSI2_MSK	SCSI1_MSK	VRD2_MSK	VRD1_MSK	3Fh

Bit	Name	R/W	Description
0	VRD1_MSK	R/W	When this bit is set, $\overline{\text{VRD1_HOT}}$ error events are masked.
1	VRD2_MSK	R/W	When this bit is set, $\overline{\text{VRD2_HOT}}$ error events are masked.
2	SCSI1_MSK	R/W	When this bit is set, $\overline{\text{SCSI_TERM1}}$ error events are masked.
3	SCSI2_MSK	R/W	When this bit is set, $\overline{\text{SCSI_TERM2}}$ error events are masked.
4	DVccp1_MSK	R/W	When this bit is set, dynamic Vccp limit error events for AD_IN7 (CPU1) are masked.
5	DVccp2_MSK	R/W	When this bit is set, dynamic Vccp limit error events for AD_IN8 (CPU2) are masked.
7:6	RES	R	Reserved

3.17.10.3 Register EEh Special Function Zone 1 Adjustment Offset

Register Address	Read/ Write	Register Name	Bit 7	Bit 6	Bit 5	Bit 4	Bit 3	Bit 2	Bit 1	Bit 0	Default Value
EEh	R/W	Special Function Zone 1 Adjustment Offset	RES	RES	Z1_ADJUST						00h

Bit	Name	R/W	Description
5:0	Z1_ADJUST	R/W	6-bit signed 2's complement offset adjustment. This value is added to all zone 1 temperature measurements as they are made. All LM93 registers and functions behave as if the resulting temperature was the true measured temperature. This register allows offset adjustments from +31°C to −32°C in 1°C steps.
7:6	RES	R	Reserved

3.17.10.4 Register EFh Special Function Zone 2 Adjustment Offset

Register Address	Read/ Write	Register Name	Bit 7	Bit 6	Bit 5	Bit 4	Bit 3	Bit 2	Bit 1	Bit 0	Default Value
EFh	R/W	Special Function Zone 2 Adjustment Offset	RES	RES	Z2_ADJUST						00h

Bit	Name	R/W	Description
5:0	Z2_ADJUST	R/W	6-bit signed 2's complement offset adjustment. This value is added to all zone 2 temperature measurements as they are made. All LM93 registers and functions behave as if the resulting temperature was the true measured temperature. This register allows offset adjustments from +31°C to −32°C in 1°C steps.
7:6	RES	R	Reserved

Copyright © 2003–2013, Texas Instruments Incorporated

4 Electrical Specifications

4.1 Absolute Maximum Ratings (1)(2)(3)

Positive Supply Voltage (V_{DD})	6.0V
Voltage on Any Digital Input or Output Pin	−0.3V to 6.0V (Except Analog Inputs)
Voltage on +5V Input	−0.3V to +6.667V
Voltage at Positive Thermal Diode Inputs, ±12V Inputs	−0.3V to (V_{DD} + 0.05V)
Voltage at Other Analog Voltage Inputs	−0.3V to +6.0V
Input Current at Thermal Diode Negative Inputs	±1 mA
Input Current at any pin (4)	±10mA
Package Input Current (4)	±100 mA
Maximum Junction Temperature (T_{JMAX}) (5)	150 °C
ESD Susceptibility (6)	
Human Body Model	3 kV
Machine Model	300V
Storage Temperature	−65°C to +150°C
Soldering process must comply with reflow temperature profile specifications. Refer to www.ti.com/packaging. (7)	

(1) Absolute Maximum Ratings indicate limits beyond which damage to the device may occur. Operating Ratings indicate conditions for which the device is functional, but do not ensure specific performance limits. For ensured specifications and test conditions, see the DC Electrical Characteristics. The ensured specifications apply only for the test conditions listed. Some performance characteristics may degrade when the device is not operated under the listed test conditions.
(2) All voltages are measured with respect to GND, unless otherwise noted.
(3) If Military/Aerospace specified devices are required, please contact the TI Sales Office/ Distributors for availability and specifications.
(4) When the input voltage (V_{IN}) at any pin exceeds the power supplies (V_{IN} < (GND or AGND) or V_{IN} > V_{DD}, except for analog voltage inputs), the current at that pin should be limited to 10 mA. The 100 mA maximum package input current rating limits the number of pins that can safely exceed the power supplies with an input current of 10 mA to ten. Parasitic components and/or ESD protection circuitry are shown below for the LM93's pins. Care should be taken not to forward bias the parasitic diode, D1, present on pins D+ and D−. Doing so by more than 50 mV may corrupt temperature measurements. An "✓" in Table 4-1 below indicates that the device is connected to the pin listed. D3 and the ESD Clamp are connected between V+ (V_{DD}, AD_IN16) and GND. SNP stands for snap-back device.

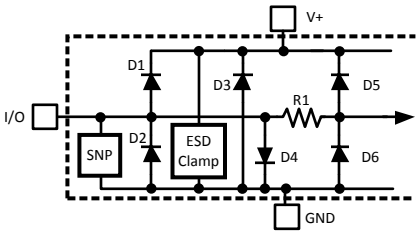

(5) Typical parameters are at T_J = T_A = 25 °C and represent most likely parametric norm.
(6) Human body model, 100 pF discharged through a 1.5 kΩ resistor. Machine model, 200 pF discharged directly into each pin.
(7) Reflow temperature profiles are different for lead-free and non lead-free packages.

4.2 Operating Ratings (1)(2)

Operating Temperature Range	0°C ≤ T_A ≤ +85°C
Nominal Supply Voltage	3.3V
Supply Voltage Range (V_{DD})	+3.0V to +3.6V
VID0-VID5	−0.05V to +5.5V
Digital Input Voltage Range	−0.05V to (V_{DD} + 0.05V)
Package Thermal Resistance (3)	79°C/W

(1) Absolute Maximum Ratings indicate limits beyond which damage to the device may occur. Operating Ratings indicate conditions for which the device is functional, but do not ensure specific performance limits. For ensured specifications and test conditions, see the DC Electrical Characteristics. The ensured specifications apply only for the test conditions listed. Some performance characteristics may degrade when the device is not operated under the listed test conditions.
(2) All voltages are measured with respect to GND, unless otherwise noted.
(3) The maximum power dissipation must be de-rated at elevated temperatures and is dictated by T_{JMAX}, θ_{JA} and the ambient temperature, T_A. The maximum allowable power dissipation at any temperature is PD = (T_{JMAX} − T_A) / θ_{JA}. The $\theta_{JA}$for the LM93 when mounted to 1 oz. copper foil PCB the θ_{JA} with different air flow is listed in the following table.

Air Flow	Junction to Ambient Thermal Resistance, θ_{JA}
0 m/s	79 °C/W
1.14 m/s (225 LFPM)	62 °C/W
2.54 m/s (500 LFPM)	52 °C/W

4.3 DC Electrical Characteristics

The following limits apply for +3.0 V_{DC} to +3.6 V_{DC}, unless otherwise noted. **Bold face limits apply for T_A = T_J over T_{MIN} to T_{MAX} of the operating range;** all other limits T_A = T_J = 25°C unless otherwire noted. T_A is the ambient temperature of the LM93; T_J is the junction temperature of the LM93; T_D is the junction temperature of the thermal diode.

Symbol	Parameter	Conditions	Typical (1)	Limits (2)	Units (Limits)
POWER SUPPLY CHARACTERISTICS					
	Power Supply Current	Converting, Interface and Fans Inactive, Peak Current	2	**3**	mA (max)
		Converting, Interface and Fans Inactive, Average Current	0.9		mA
	Power-On Reset Threshold Voltage		2	**1.6**	V (min)
				2.7	V (max)
TEMPERATURE-TO-DIGITAL CONVERTER CHARACTERISTICS					
	Local Temperature Accuracy Over Full Range	0°C T_A ≤85°C	±2	**±3**	°C (max)
		T_A = +55°C	±1	**±2.8**	°C (max)
	Local Temperature Resolution		1		°C
	Remote Thermal Diode Temperature Accuracy Over Full Range; targeted for a typical Prescott processor (3)	0°C ≤ T_A ≤ 85°C and 25°C ≤ T_D ≤ 100°C		**±3**	°C (max)
	Remote Thermal Diode Temperature Accuracy; targeted for a typical Prescott processor (3)	0°C ≤ T_A ≤ 85°C and 25°C ≤ T_D ≤ 70°C	±1		°C
	Remote Temperature Resolution		1		°C
	Thermal Diode Source Current	High Level	188	280	µA (max)
		Low Level	11.75		µA
	Thermal Diode Current Ration		16		
T_C	Total Monitoring Cycle Time			**100**	ms (max)

(1) Typical parameters are at T_J = T_A = 25 °C and represent most likely parametric norm.
(2) Limits are specified to TI's AOQL (Average Outgoing Quality Level).
(3) When measuring an MMBT3904 transistor, 4 °C should be subracted from all temperature readings.

Copyright © 2003–2013, Texas Instruments Incorporated

DC Electrical Characteristics *(continued)*

The following limits apply for +3.0 V_{DC} to +3.6 V_{DC}, unless otherwise noted. **Bold face limits apply for $T_A = T_J$ over T_{MIN} to T_{MAX} of the operating range;** all other limits $T_A = T_J$ = 25°C unless otherwire noted. T_A is the ambient temperature of the LM93; T_J is the junction temperature of the LM93; T_D is the junction temperature of the thermal diode.

Symbol	Parameter	Conditions	Typical (1)	Limits (2)	Units (Limits)
ANALOG-TO-DIGITAL VOLTAGE MEASUREMENT CONVERTER CHARACTERISTICS					
TUE (1)	Total Unadjusted Error (2)			**±2**	% of FS (max)
DNL	Differential Non-Linearity		±1		LSB
PSS	Power Supply (V_{DD}) Sensitivity		±1		%/V (of FS)
T_C	Total Monitoring Cycle Time			**100**	ms (max)
	Input Resistance for Inputs with Dividers		200	**140**	kΩ (min)
	AD_IN1- AD_IN3 and AD_IN15 Analog Input Leakage Current (3)			60	nA (max)
REFERENCE OUTPUT (V_{REF}) CHARACTERISTICS					
	Tolerance			**±1**	% (max)
V_{REF}	Output Voltage (4)		2.500	**2.525** **2.475**	V (max) V (min)
	Load Regulation	I_{SOURCE} = −2 mA I_{SINK} = 2 mA	0.1		%
DIGITAL OUTPUTS: PWM1, PWM2					
I_{OL}	Current Sink			**8**	mA (min)
V_{OL}	Output Low Voltage	I_{OUT} = 8.0 mA		**0.4**	V (max)
DIGITAL OUTPUTS: ALL					
V_{OL}	Output Low Voltage (Note excessive current flow causes self-heating and degrades the internal temperature accuracy.)	I_{OUT} = 4.0 mA		**0.4**	V (min)
		I_{OUT} = 6 mA		**0.55**	V (min)
I_{OH}	High Level Output Leakage Current	$V_{OUT} = V_{DD}$	0.1	**10**	µA (max)
I_{OTMAX}	Maximum Total Sink Current for all Digital Outputs Combined			**32**	mA (max)
C_O	Digital Output Capacitance		20		pF
DIGITAL INPUTS: ALL					
V_{IH}	Input High Voltage Except Address Select			**2.1**	V (min)
V_{IL}	Input Low Voltage Except Address Select			**0.8**	V (max)
V_{IH}	Input High Voltage for Address Select			**90% V_{DD}**	V (min)
V_{IM}	Input Mid Voltage for Address Select			**43% V_{DD}** **57% V_{DD}**	V (min) V (max)
V_{IL}	Input Low Voltage for Address Select			**10% V_{DD}**	V (max)
V_{HYST}	DC Hysteresis		0.3		V
I_{IH}	Input High Current	$V_{IN} = V_{DD}$		**−10**	µA (min)
I_{IL}	Input Low Current	V_{IN} = 0V		**10**	µA (max)
C_{IN}	Digital Input Capacitance		20		pF
DIGITAL INPUTS: P1_VIDx, P2_VIDx, GPIO_7, GPIO_6, GPIO_5, GPIO_4 (When respective bit set in Register BEh GPI/VID Level Control)					
V_{IH}	Alternate Input High Voltage (AGTL+ Compatible)			**0.8**	V (min)
V_{IL}	Alternate Input Low Voltage (AGTL+ Compatible)			**0.4**	V (max)

(1) TUE (Total Unadjusted Error) includes Offset, Gain and Linearity errors of the ADC.
(2) Total Monitoring Cycle Time includes all temperature and voltage conversions.
(3) Leakage current approximately doubles every 20 °C.
(4) A total digital I/O current of 40mA can cause 6mV of offset in Vref.

Copyright © 2003–2013, Texas Instruments Incorporated

4.4 AC Electrical Characteristics

The following limits apply for +3.0 V_{DC} to +3.6 V_{DC}, unless otherwise noted. **Bold face limits apply for $T_A = T_J = T_{MIN}$ to T_{MAX} of the operating range;** all other limits $T_A = T_J = 25°C$ unless otherwire noted.

Symbol	Parameter	Conditions	Typical (1)	Limits (2)	Units (Limits)
FAN RPM-TO-DIGITAL CHARACTERISTICS					
	Counter Resolution		14		bits
	Number of fan tach pulses count is based on		2		pulses
	Counter Frequency		22.5		kHz
	Accuracy			**±6**	% (max)
PWM OUTPUT CHARACTERISTICS					
	Frequency Tolerances			**±6**	% (max)
	Duty-Cycle Tolerance		±2	**±6**	% (max)
RESET INPUT/OUTPUT CHARACTERISTICS					
	Output Pulse Width Upon Power Up			**250** **330**	ms (min) ms (max)
	Minimum Input Pulse Width			**10**	µs (min)
	Reset Output Fall Time	1.6V to 0.4V Logic Levels		**1**	µs (max)
SMBUS TIMING CHARACTERISTICS (3)					
f_{SMBCLK}	SMBCLK (Clock) Clock Frequency			**10** **100**	kHz (min) kHz (max)
t_{BUF}	SMBus Free Time between Stop and Start Conditions			**4.7**	µs (min)
$t_{HD;STA}$	Hold time after (Repeated) Start Condition. After this period, the first clock is generated.			**4.0**	µs (min)
$t_{SU;STA}$	Repeated Start Condition Setup Time			**4.7**	µs (min)
$t_{SU;STO}$	Stop Condition Setup Time			**4.0**	µs (min)
$t_{SU;DAT}$	Data Input Setup Time to SMBCLK High			**250**	ns (min)
$t_{HD;DAT}$	Data Output Hold Time after SMBCLK Low			**300** **930**	ns (min) ns (max)
t_{LOW}	SMBCLK Low Period			**4.7** **50**	µs (min) µs (max)
t_{HIGH}	SMBCLK High Period			**4.0** **50**	µs (min) µs (max)
t_R	Rise Time			**1**	µs (max)
t_F	Fall Time			**300**	ns (max)
$t_{TIMEOUT}$	Timeout SMBDAT or SMBCLK low time required to reset the Serial Bus Interface to the Idle State		31	**25** **35**	ms ms (min) ms (max)
t_{POR}	Time in which a device must be operational after power-on reset	V_{DD} > +2.8V		**500**	ms (max)
C_L	Capacitance Load on SMBCLK and SMBDAT			**400**	pF (max)

(1) Typical parameters are at $T_J = T_A = 25$ °C and represent most likely parametric norm.
(2) Limits are specified to TI's AOQL (Average Outgoing Quality Level).
(3) Timing specifications are tested at the TTL logic levels, $V_{IL} = 0.4V$ for a falling edge and $V_{IH} = 2.4V$ for a rising edge. TRI-STATE output voltage is forced to 1.4V.

Copyright © 2003–2013, Texas Instruments Incorporated

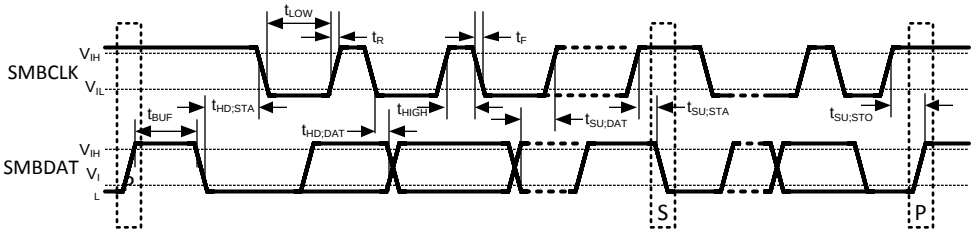

Table 4-1.

Symbol	Pin #	D1	D2	D4	D5	D6	SNP	R1
GPIO_0/TACH1	1		✓			✓	✓	50 Ω
GPIO_1/TACH2	2		✓			✓	✓	50 Ω
GPIO_2/TACH3	3		✓			✓	✓	50 Ω
GPIO_3/TACH4	4		✓			✓	✓	50 Ω
GPIO_4 / $\overline{\text{P1_THERMTRIP}}$	5		✓			✓	✓	50 Ω
GPIO_5 / $\overline{\text{P2_THERMTRIP}}$	6		✓			✓	✓	50 Ω
GPIO_6	7		✓			✓	✓	50 Ω
GPIO_7	8		✓			✓	✓	50 Ω
$\overline{\text{VRD1_HOT}}$	9		✓				✓	
$\overline{\text{VRD2_HOT}}$	10		✓				✓	
$\overline{\text{SCSI_TERM1}}$	11		✓				✓	
$\overline{\text{SCSI_TERM2}}$	12		✓				✓	
SMBDAT	13		✓				✓	
SMBCLK	14		✓				✓	
$\overline{\text{ALERT}}$/XtestOut	15		✓				✓	
$\overline{\text{RESET}}$	16		✓				✓	
AGND	17	Internally shorted to GND pin.						
V_{REF}	18	✓	✓					
REMOTE1–	19	✓	✓	✓	✓	✓		50 Ω
REMOTE1+	20	✓	✓		✓	✓		50 Ω
REMOTE2–	21	✓	✓	✓	✓	✓		50 Ω
REMOTE+	22	✓	✓		✓	✓		50 Ω
AD_IN1	23		✓		✓	✓	✓	✓
AD_IN2	24		✓		✓	✓	✓	✓
AD_IN3	25		✓		✓	✓	✓	✓
AD_IN4	26		✓		✓	✓	✓	✓
AD_IN5	27		✓		✓	✓	✓	✓
AD_IN6	28		✓		✓	✓	✓	✓
AD_IN7	29		✓		✓	✓	✓	✓
AD_IN8	30		✓		✓	✓	✓	✓
AD_IN9	31		✓		✓	✓	✓	✓
AD_IN10	32		✓		✓	✓	✓	✓
AD_IN11	33		✓		✓	✓	✓	✓
AD_IN12	34		✓		✓	✓	✓	✓
AD_IN13	35		✓		✓	✓	✓	✓
AD_IN14	36		✓		✓	✓	✓	✓
AD_IN15	37		✓		✓	✓	✓	✓

Copyright © 2003–2013, Texas Instruments Incorporated

Table 4-1. (continued)

Symbol	Pin #	D1	D2	D4	D5	D6	SNP	R1
ADDR_SEL	38		✓				✓	
AD_IN16/V_{DD} (V+)	39		✓		✓	✓		✓
GND	40	Internally shorted to AGND.						
PWM1	41		✓			✓	✓	50 Ω
PWM2	42		✓			✓	✓	50 Ω
P1_VID0	43		✓				✓	
P1_VID1	44		✓				✓	
P1_VID2	45		✓				✓	
P1_VID3	46		✓				✓	
P1_VID4	47		✓				✓	
P1_VID5	48		✓				✓	
$\overline{\text{P1_PROCHOT}}$	49		✓			✓	✓	50 Ω
$\overline{\text{P2_PROCHOT}}$	50		✓			✓	✓	50 Ω
P2_VID0	51		✓				✓	
P2_VID1	52		✓				✓	
P2_VID2	53		✓				✓	
P2_VID3	54		✓				✓	
P2_VID4	55		✓				✓	
P2_VID5	56		✓				✓	

Copyright © 2003–2013, Texas Instruments Incorporated

Revision History

NOTE: Page numbers for previous revisions may differ from page numbers in the current version.

Revision	Date	Change
F	March 27, 2013	Changed layout of National Data Sheet to TI Format
2.0	April 12, 2004	1. Updated Registers 80–83h Fan Boost Temperature Registers, changed "If set to 80h, the feature is disabled." to "If set to 7Fh and the fan control temperature resolution is 1°C, the feature is disabled." 2. Updated DC Electrical Characteristics, Thermal Diode Source Current typical specifications, changed: "170" to 188" and "10.625" to "11.75". 3. Updated DC Electrical Characteristics, added Thermal Diode Current Ratio typical specification. 4. Updated Absolute Maximum Ratings, replaced Soldering Information with note.
1.2	February 22, 2004	1. Typographical changes
1.1	December 22, 2004	1. Typographical changes
1.0	November 11, 2003	1. Final data sheet initial release

Copyright © 2003–2013, Texas Instruments Incorporated

PACKAGING INFORMATION

Orderable part number	Status (1)	Material type (2)	Package | Pins	Package qty | Carrier	RoHS (3)	Lead finish/ Ball material (4)	MSL rating/ Peak reflow (5)	Op temp (°C)	Part marking (6)
LM93CIMT/NOPB	Obsolete	Production	TSSOP (DGG) | 56	-	-	Call TI	Call TI	0 to 85	LM93CIMT
LM93CIMTX/NOPB	Active	Production	TSSOP (DGG) | 56	1000 | LARGE T&R	Yes	SN	Level-2-260C-1 YEAR	0 to 85	LM93CIMT
LM93CIMTX/NOPB.A	Active	Production	TSSOP (DGG) | 56	1000 | LARGE T&R	Yes	SN	Level-2-260C-1 YEAR	0 to 85	LM93CIMT

(1) **Status:** For more details on status, see our product life cycle.

(2) **Material type:** When designated, preproduction parts are prototypes/experimental devices, and are not yet approved or released for full production. Testing and final process, including without limitation quality assurance, reliability performance testing, and/or process qualification, may not yet be complete, and this item is subject to further changes or possible discontinuation. If available for ordering, purchases will be subject to an additional waiver at checkout, and are intended for early internal evaluation purposes only. These items are sold without warranties of any kind.

(3) **RoHS values:** Yes, No, RoHS Exempt. See the TI RoHS Statement for additional information and value definition.

(4) **Lead finish/Ball material:** Parts may have multiple material finish options. Finish options are separated by a vertical ruled line. Lead finish/Ball material values may wrap to two lines if the finish value exceeds the maximum column width.

(5) **MSL rating/Peak reflow:** The moisture sensitivity level ratings and peak solder (reflow) temperatures. In the event that a part has multiple moisture sensitivity ratings, only the lowest level per JEDEC standards is shown. Refer to the shipping label for the actual reflow temperature that will be used to mount the part to the printed circuit board.

(6) **Part marking:** There may be an additional marking, which relates to the logo, the lot trace code information, or the environmental category of the part.

Multiple part markings will be inside parentheses. Only one part marking contained in parentheses and separated by a "~" will appear on a part. If a line is indented then it is a continuation of the previous line and the two combined represent the entire part marking for that device.

Important Information and Disclaimer: The information provided on this page represents TI's knowledge and belief as of the date that it is provided. TI bases its knowledge and belief on information provided by third parties, and makes no representation or warranty as to the accuracy of such information. Efforts are underway to better integrate information from third parties. TI has taken and continues to take reasonable steps to provide representative and accurate information but may not have conducted destructive testing or chemical analysis on incoming materials and chemicals. TI and TI suppliers consider certain information to be proprietary, and thus CAS numbers and other limited information may not be available for release.

In no event shall TI's liability arising out of such information exceed the total purchase price of the TI part(s) at issue in this document sold by TI to Customer on an annual basis.

TAPE AND REEL INFORMATION

REEL DIMENSIONS

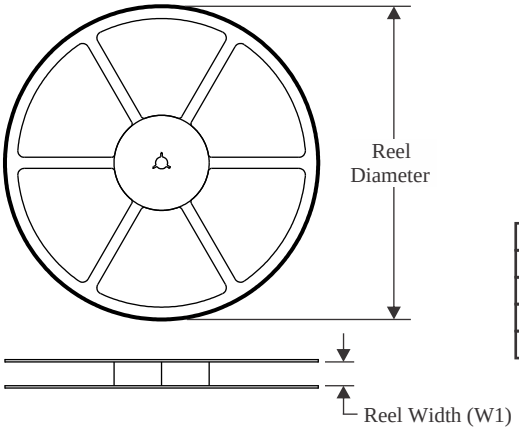

TAPE DIMENSIONS

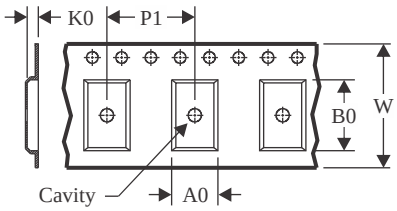

A0	Dimension designed to accommodate the component width
B0	Dimension designed to accommodate the component length
K0	Dimension designed to accommodate the component thickness
W	Overall width of the carrier tape
P1	Pitch between successive cavity centers

QUADRANT ASSIGNMENTS FOR PIN 1 ORIENTATION IN TAPE

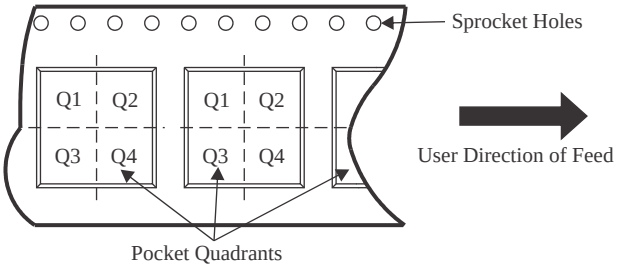

*All dimensions are nominal

Device	Package Type	Package Drawing	Pins	SPQ	Reel Diameter (mm)	Reel Width W1 (mm)	A0 (mm)	B0 (mm)	K0 (mm)	P1 (mm)	W (mm)	Pin1 Quadrant
LM93CIMTX/NOPB	TSSOP	DGG	56	1000	330.0	24.4	8.6	14.5	1.8	12.0	24.0	Q1

TAPE AND REEL BOX DIMENSIONS

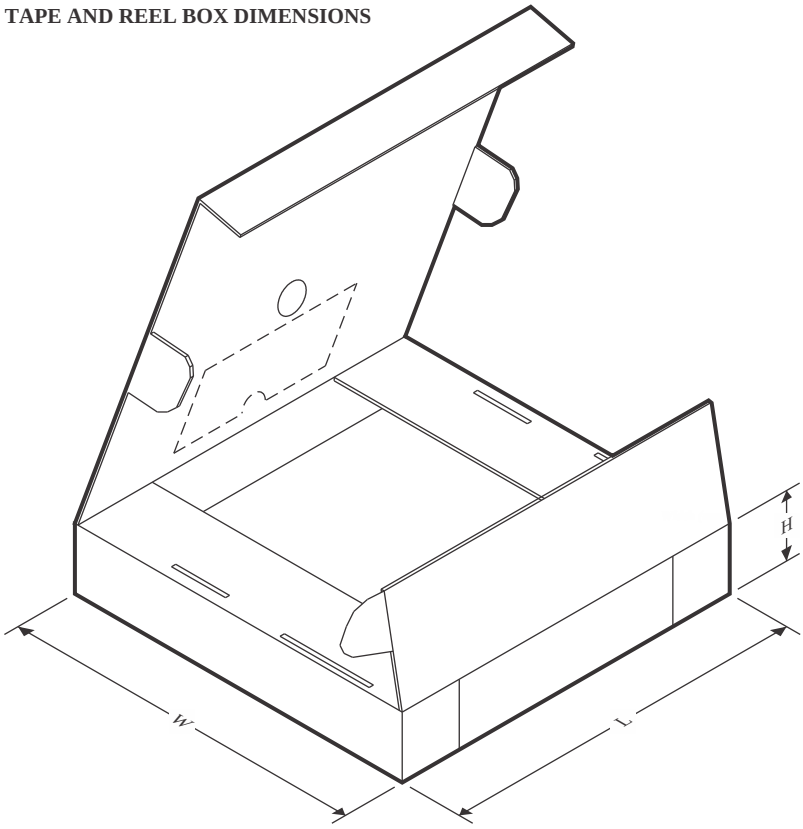

*All dimensions are nominal

Device	Package Type	Package Drawing	Pins	SPQ	Length (mm)	Width (mm)	Height (mm)
LM93CIMTX/NOPB	TSSOP	DGG	56	1000	356.0	356.0	45.0

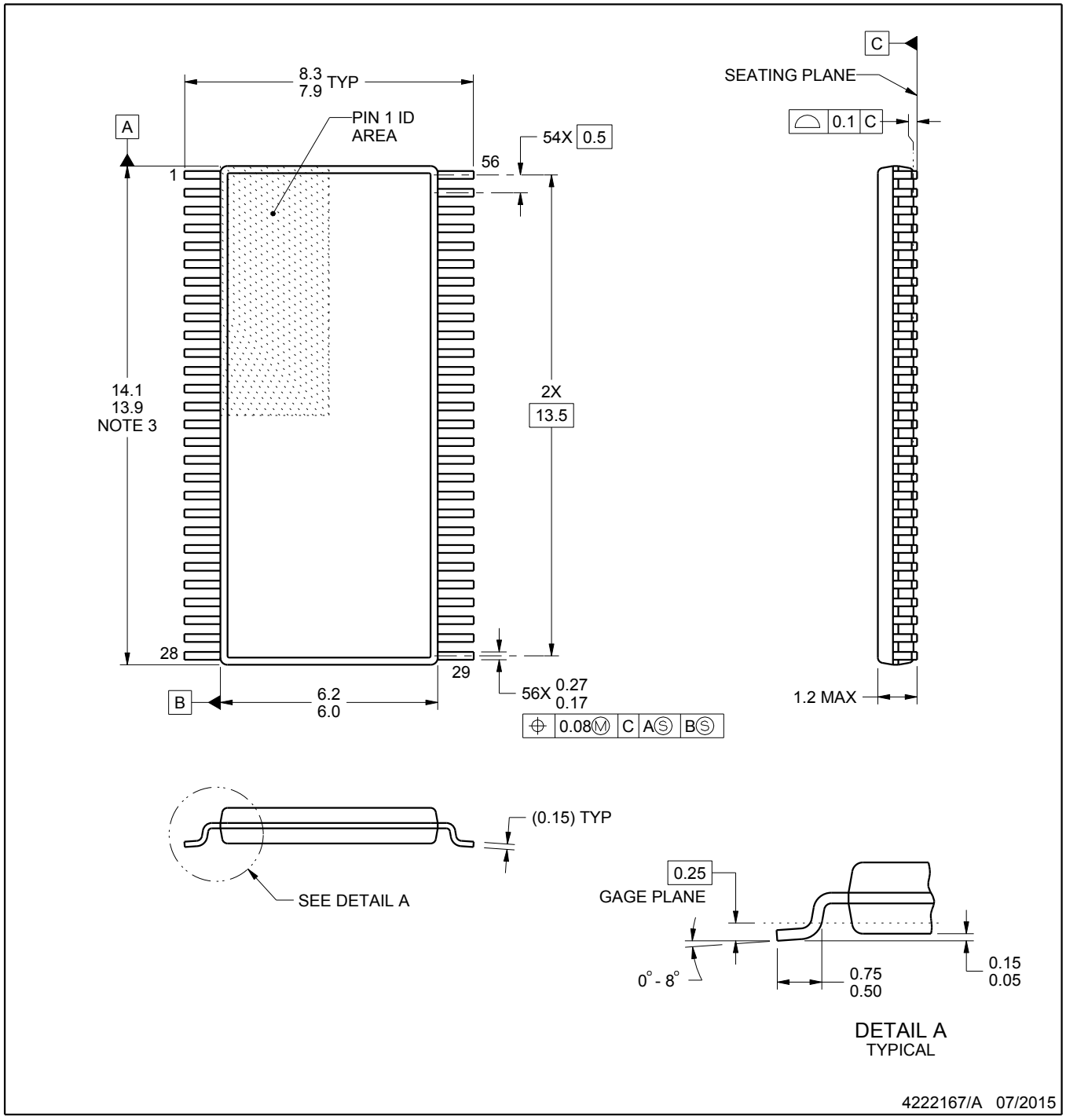

NOTES:

1. All linear dimensions are in millimeters. Any dimensions in parenthesis are for reference only. Dimensioning and tolerancing per ASME Y14.5M.
2. This drawing is subject to change without notice.
3. This dimension does not include mold flash, protrusions, or gate burrs. Mold flash, protrusions, or gate burrs shall not exceed 0.15 mm per side.
4. Reference JEDEC registration MO-153.

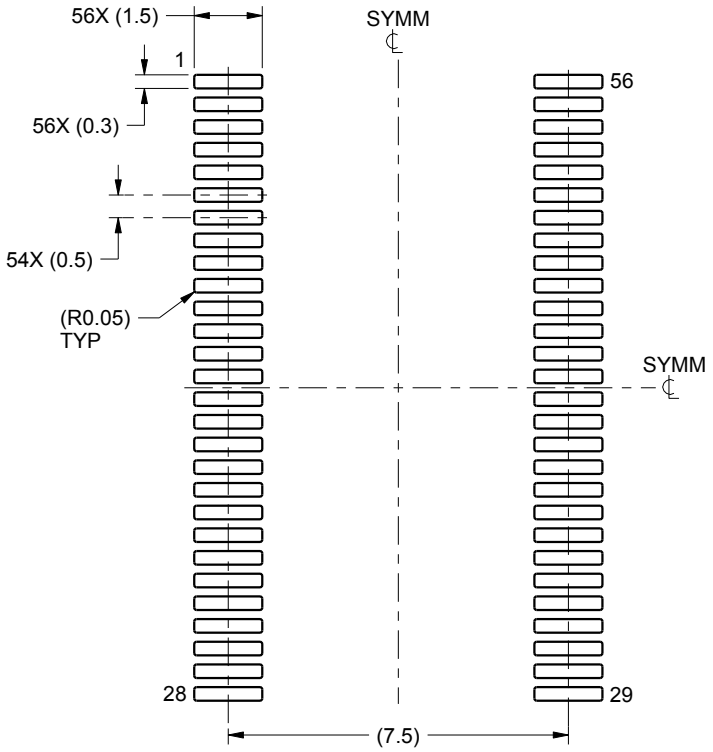

LAND PATTERN EXAMPLE
SCALE:6X

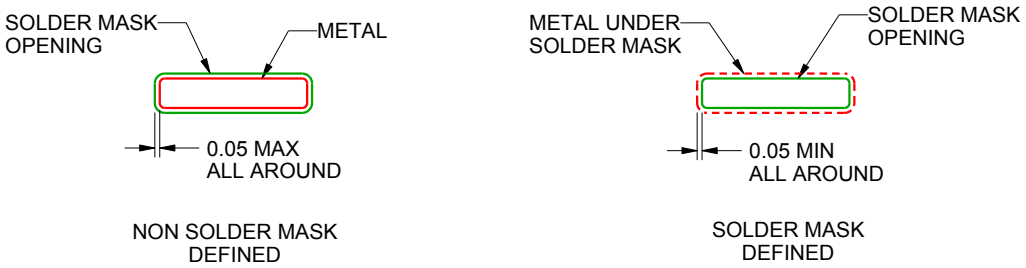

SOLDER MASK DETAILS

4222167/A 07/2015

NOTES: (continued)

5. Publication IPC-7351 may have alternate designs.
6. Solder mask tolerances between and around signal pads can vary based on board fabrication site.

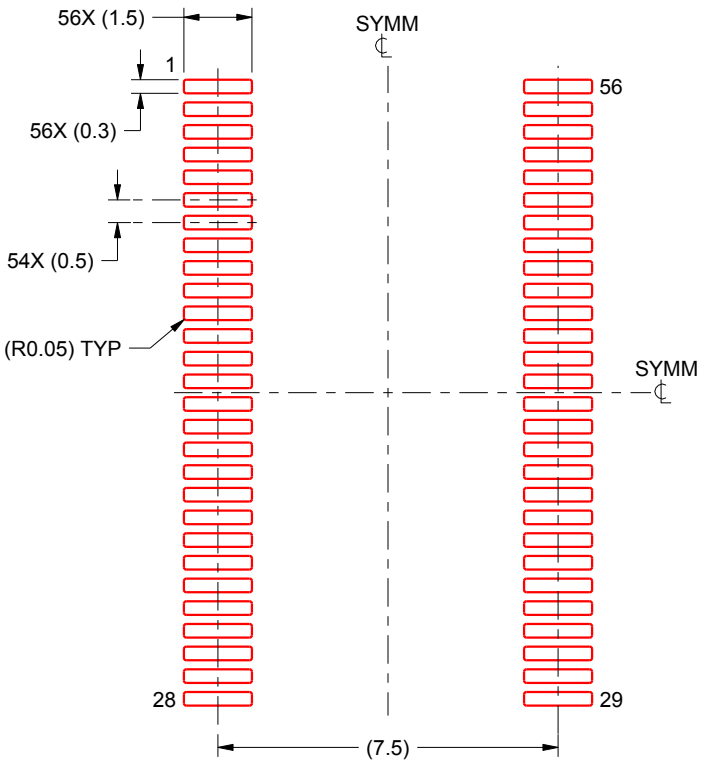

SOLDER PASTE EXAMPLE
BASED ON 0.125 mm THICK STENCIL
SCALE:6X

4222167/A 07/2015

NOTES: (continued)

7. Laser cutting apertures with trapezoidal walls and rounded corners may offer better paste release. IPC-7525 may have alternate design recommendations.
8. Board assembly site may have different recommendations for stencil design.

IMPORTANT NOTICE AND DISCLAIMER

TI PROVIDES TECHNICAL AND RELIABILITY DATA (INCLUDING DATASHEETS), DESIGN RESOURCES (INCLUDING REFERENCE DESIGNS), APPLICATION OR OTHER DESIGN ADVICE, WEB TOOLS, SAFETY INFORMATION, AND OTHER RESOURCES “AS IS” AND WITH ALL FAULTS, AND DISCLAIMS ALL WARRANTIES, EXPRESS AND IMPLIED, INCLUDING WITHOUT LIMITATION ANY IMPLIED WARRANTIES OF MERCHANTABILITY, FITNESS FOR A PARTICULAR PURPOSE OR NON-INFRINGEMENT OF THIRD PARTY INTELLECTUAL PROPERTY RIGHTS.

These resources are intended for skilled developers designing with TI products. You are solely responsible for (1) selecting the appropriate TI products for your application, (2) designing, validating and testing your application, and (3) ensuring your application meets applicable standards, and any other safety, security, regulatory or other requirements.

These resources are subject to change without notice. TI grants you permission to use these resources only for development of an application that uses the TI products described in the resource. Other reproduction and display of these resources is prohibited. No license is granted to any other TI intellectual property right or to any third party intellectual property right. TI disclaims responsibility for, and you fully indemnify TI and its representatives against any claims, damages, costs, losses, and liabilities arising out of your use of these resources.

TI’s products are provided subject to TI’s Terms of Sale, TI’s General Quality Guidelines, or other applicable terms available either on ti.com or provided in conjunction with such TI products. TI’s provision of these resources does not expand or otherwise alter TI’s applicable warranties or warranty disclaimers for TI products. Unless TI explicitly designates a product as custom or customer-specified, TI products are standard, catalog, general purpose devices.

TI objects to and rejects any additional or different terms you may propose.

Copyright © 2026, Texas Instruments Incorporated

Last updated 10/2025