LM96194 TruTherm™ Hardware Monitor with PI Fan Control for Workstation Management

Check for Samples: LM96194

FEATURES

- **ΣΔ ADC Architecture**
- **Monitors 9 Power Supplies**
- **Monitors 4 Remote Thermal Diodes and 2 LM60**
- **New TruTherm Technology Support for Precision Thermal Diode Measurements**
- **Internal Ambient Temperature Sensing**
- **Programmable Autonomous Fan Control Based on Temperature Readings with Fan Boost Support**
- **Fan Boost Support on Tachometer Limit Error Event**
- **Fan Control Based on 13-step Lookup Table or PI Control Loop or Combination of Both**
- **PI Fan Control Loop Supports Tcontrol**
- **Temperature Reading Digital Filters**
- **0.5°C Digital Temperature Sensor Resolution**
- **0.0625°C Filtered Temperature Resolution for Fan Control**
- **2 PWM Fan Speed Control Outputs**
- **4 Fan Tachometer Inputs**
- **Processor Thermal Throttling ($\overline{\text{PROCHOT}}$) Monitoring**
- **Dynamic VID Monitoring (6/7 VIDs per processor) Supports VRD10.2/11**
- **8 General Purpose I/Os:**
  - **4 Can be Configured as Fan Tachometer Inputs**
  - **2 Can be Configured to Connect to Processor $\overline{\text{THERMTRIP}}$**
  - **2 are Standard GPIOs that Could be Used to Monitor $\overline{\text{IERR}}$ Signal**
- **A General Purpose Inputs That can be Used to Monitor the 7th VID Signal for VRD11**
- **Limit Register Comparisons of all Monitored Values**
- **2-wire Serial Digital Interface, SMBus 2.0 Compliant**
  - **Supports Byte/block Read and Write**
  - **Selectable Slave Address (Tri-level Pin Selects 1 of 3 Possible Addresses)**
  - **$\overline{\text{ALERT}}$ Output Supports Interrupt or Comparator Modes**
- **WQFN-48 Package**
- **XOR-tree Test Mode**

APPLICATIONS

- **Servers**
- **Workstations**
- **Processor based equipment**

KEY SPECIFICATIONS

- **Voltage Measurement Accuracy: ±2% FS (max)**
- **Temperature Resolution: 9-bits, 0.5°C**
- **Temperature Sensor Accuracy: ±2.5 °C (max)**
- **Temperature Range:**
  - **LM96194 Operational: -40°C to +85°C**
  - **Remote Temp Accuracy: -40°C to +125°C**
- **Power Supply Voltage: +3.0V to +3.6V**
- **Power Supply Current: 1.6 mA**

DESCRIPTION

The LM96194 hardware monitor has a two wire digital interface compatible with SMBus 2.0. Using a ΣΔ ADC, the LM96194 measures the temperature of four remote diode connected transistors as well as its own die and 9 power supply voltages. The LM96194 has new TruTherm technology that supports precision thermal diode measurements of processors on sub-micron processes.

Please be aware that an important notice concerning availability, standard warranty, and use in critical applications of Texas Instruments semiconductor products and disclaimers thereto appears at the end of this data sheet.

Pentium is a trademark of Intel Corporation.
Intel is a registered trademark of Intel Corporation.
I^2C, I^2C Block Write are trademarks of NXP.
All other trademarks are the property of their respective owners.

PRODUCTION DATA information is current as of publication date. Products conform to specifications per the terms of the Texas Instruments standard warranty. Production processing does not necessarily include testing of all parameters.

Copyright © 2007–2013, Texas Instruments Incorporated

To set fan speed, the LM96194 has two PWM outputs that are each controlled by up to six temperature zones. The fan-control algorithm can be based on a lookup table, PI (proportional/integral) control loop, or a combination of both. The LM96194 includes digital filters that can be invoked to smooth temperature readings for better control of fan speed such that acoustical noise is minimized. The LM96194 has four tachometer inputs to measure fan speed. Limit and status registers for all measured values are included.

The LM96194 includes most of the features of the LM94, dual CPU motherboard server management ASIC, such as measurement and control support for dynamic Vccp monitoring for VRD10/11 and PROCHOT but is targeted for single processor systems.

Block Diagram

The block diagram of LM96194 hardware is illustrated below. The hardware implementation is a single chip ASIC solution.

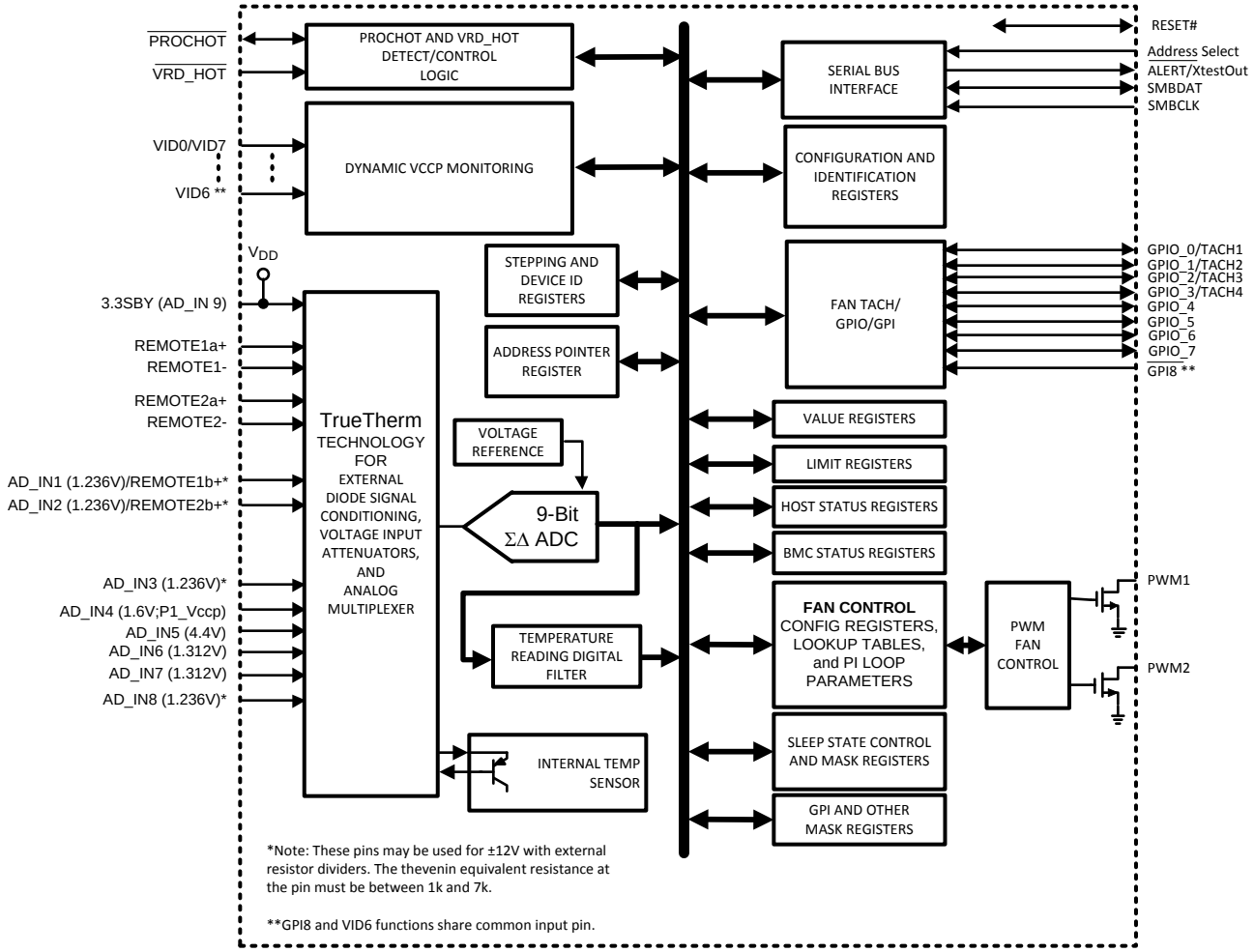

Copyright © 2007–2013, Texas Instruments Incorporated

Application

The system diagram show in Figure 1 is a single processor workstation example.

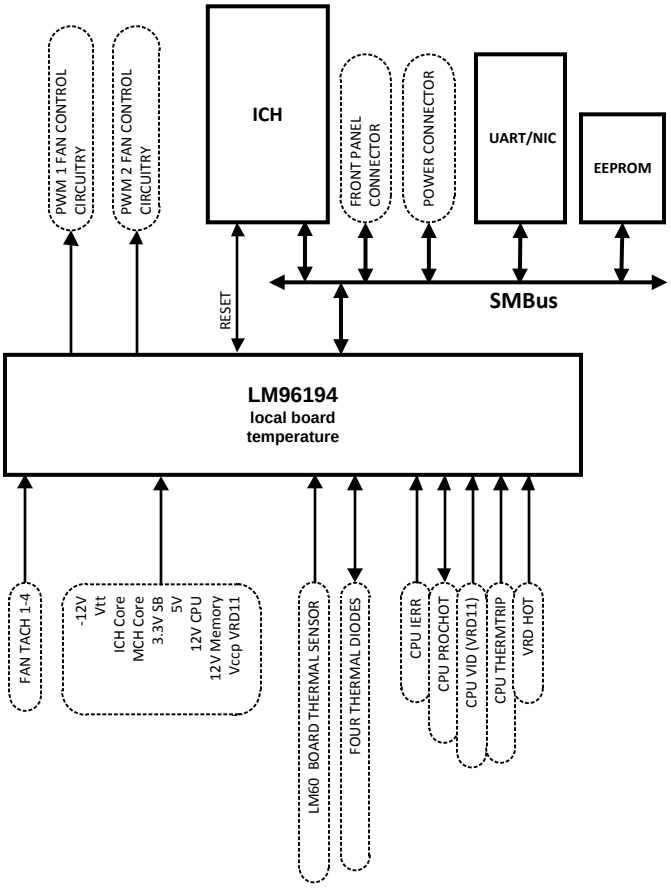

Figure 1. Workstation Management

Connection Diagram

Top View

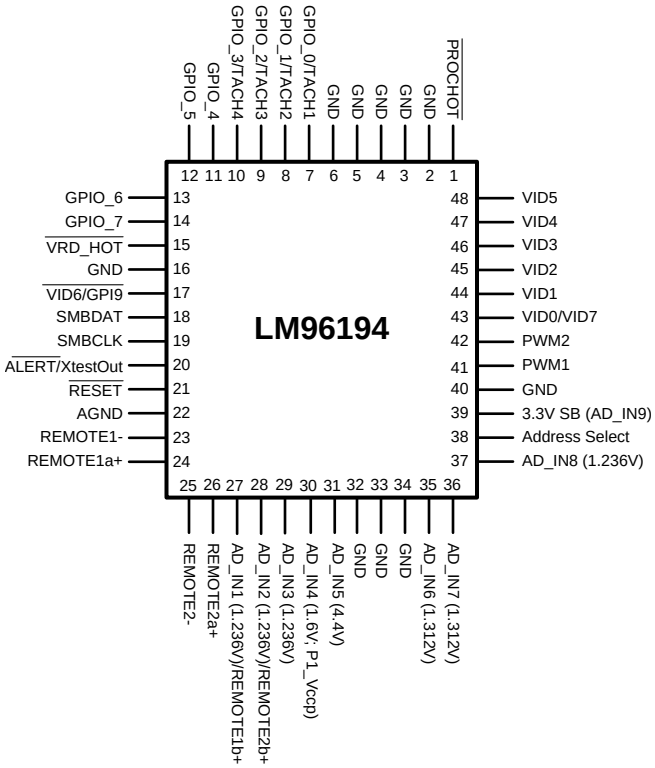

Figure 2. 48 Pin WQFN Package
See Package Number RHS0048A

Table 1. Pin Descriptions(1)

Name	Pin No.	Type	Function
$\overline{\text{PROCHOT}}$	1	Digital I/O (Open-Drain)	Connected to CPU1 $\overline{\text{PROCHOT}}$ (processor hot) signal through a bidirectional level shifter. Supports TTL input logic levels and AGTL compatible input logic levels.
GND	2	Ground	All grounds need to be tied together at the chip then taken to a low noise system ground. A voltage difference between grounds may cause erroneous results.
GND	3	Ground	All grounds need to be tied together at the chip then taken to a low noise system ground. A voltage difference between grounds may cause erroneous results.
GND	4	Ground	All grounds need to be tied together at the chip then taken to a low noise system ground. A voltage difference between grounds may cause erroneous results.
GND	5	Ground	All grounds need to be tied together at the chip then taken to a low noise system ground. A voltage difference between grounds may cause erroneous results.
GND	6	Ground	All grounds need to be tied together at the chip then taken to a low noise system ground. A voltage difference between grounds may cause erroneous results.
GPIO_0/TACH1	7	Digital I/O (Open-Drain)	Can be configured as fan tach input or a general purpose open-drain digital I/O.
GPIO_1/TACH2	8	Digital I/O (Open-Drain)	Can be configured as fan tach input or a general purpose open-drain digital I/O.

(1) The over-score indicates the signal is active low ("Not").

Copyright © 2007–2013, Texas Instruments Incorporated

Table 1. Pin Descriptions[1] (continued)

Name	Pin No.	Type	Function
GPIO_2/TACH3	9	Digital I/O (Open-Drain)	Can be configured as fan tach input or a general purpose open-drain digital I/O.
GPIO_3/TACH4	10	Digital I/O (Open-Drain)	Can be configured as fan tach input or a general purpose open-drain digital I/O..
GPIO_4 / $\overline{\text{THERMTRIP}}$	11	Digital I/O (Open-Drain)	A general purpose open-drain digital I/O. Can be configured to monitor a CPU's $\overline{\text{THERMTRIP}}$ signal to mask other errors. Supports TTL input logic levels and AGTL compatible input logic levels.
GPIO_5	12	Digital I/O (Open-Drain)	A general purpose open-drain digital I/O. Supports TTL input logic levels and AGTL compatible input logic levels.
GPIO_6	13	Digital I/O (Open-Drain)	Can be used to detect the state of CPU's $\overline{\text{IERR}}$ or a general purpose open-drain digital I/O. Supports TTL input logic levels and AGTL compatible input logic levels.
GPIO_7	14	Digital I/O (Open-Drain)	A general purpose open-drain digital I/O. Supports TTL input logic levels and AGTL compatible input logic levels.
$\overline{\text{VRD1_HOT}}$	15	Digital Input	CPU1 voltage regulator $\overline{\text{HOT}}$. Supports TTL input logic levels and AGTL compatible input logic levels.
GND	16	Ground Input	All grounds need to be tied together at the chip then taken to a low noise system ground. A voltage difference between grounds may cause erroneous results.
$\overline{\text{VID6}}$/$\overline{\text{GPI9}}$	17	Digital Input	CPU VID6 input. Could also be used as a general purpose input to trigger an error event. Supports TTL input logic levels and AGTL compatible input logic levels.
SMBDAT	18	Digital I/O (Open-Drain)	Bidirectional System Management Bus Data. Output configured as 5V tolerant open-drain. SMBus 2.0 compliant.
SMBCLK	19	Digital Input	System Management Bus Clock. Driven by an open-drain output, and is 5V tolerant. SMBus 2.0 Compliant.
$\overline{\text{ALERT}}$/XtestOut	20	Digital Output (Open-Drain)	Open-drain $\overline{\text{ALERT}}$ output used in an interrupt driven system to signal that an error event has occurred. Masked error events do not activate the $\overline{\text{ALERT}}$ output. When in XOR tree test mode, functions as XOR Tree output.
$\overline{\text{RESET}}$	21	Digital I/O (Open-Drain)	Open-drain reset output when power is first applied to the LM96194. Used as a reset for devices powered by 3.3V stand-by. After reset, this pin becomes a reset input. See $\overline{\text{RESET}}$ INPUT/OUTPUT for more information. If this pin is not used, connection to an external resistive pull-up is required to prevent LM96194 malfunction.
AGND	22	GROUND Input	Analog Ground. All grounds need to be tied together at the chip then taken to a low noise system ground. A voltage difference between grounds may cause erroneous results.
REMOTE1−	23	Remote Thermal Diode_1- Input (CPU THERMDC)	This is the negative input (current sink) from both of the CPU thermal diodes. Connected to THERMDC pin of Pentium processor or the emitter of a diode connected MMBT3904 NPN transistor. Serves as the negative input into the A/D for thermal diode voltage measurements. A 100 pF capacitor is optional and can be connected between REMOTE1− and REMOTE1+.
REMOTE1a+	24	Remote Thermal Diode_1a+ I/O (CPU THERMDA1)	This is a positive connection to the first CPU thermal diode. Serves as the positive input into the A/D for thermal diode voltage measurements. It also serves as a current source output that forward biases the thermal diode. Connected to THERMDA pin of Pentium processor or the base of a diode connected MMBT3904 NPN transistor. A 100 pF capacitor is optional and can be connected between REMOTE1− and each REMOTE1+.
REMOTE2−	25	Remote Thermal Diode_2 - Input	This is the negative input (current sink) from both of the CPU2 thermal diodes. Connected to THERMDC pins of Pentium processor or the emitter of a diode connected MMBT3904 NPN transistor. Serves as the negative input into the A/D for thermal diode voltage measurements. A 100 pF capacitor is optional and can be connected between REMOTE2− and each REMOTE2+.
REMOTE2a+	26	Remote Thermal Diode_2a + I/O	This is a positive connection to the third thermal diode. Serves as the positive input into the A/D for thermal diode voltage measurements. It also serves as a current source output that forward biases the thermal diode. Connected to THERMDA pin of Pentium processor or the base of a diode connected MMBT3904 NPN transistor. A 100 pF capacitor is optional and can be connected between REMOTE2− and REMOTE2+.

Copyright © 2007–2013, Texas Instruments Incorporated

Table 1. Pin Descriptions[1] (continued)

Name	Pin No.	Type	Function
AD_IN1/REMOTE1b+	27	Analog Input (+12V1 or CPU1 THERMDA2)	Analog Input for +12V Rail 1 monitoring, for CPU1 voltage regulator. External attenuation resistors required such that 12V is attenuated to 0.927V for nominal ¾ scale reading. This pin may also serve as the second positive thermal diode input for the CPU.
AD_IN2/REMOTE2b+	28	Analog Input or Remote Thermal Diode_2b + I/O	Analog Input for +12V Rail 2 monitoring. External attenuation resistors required such that 12V is attenuated to 0.927V for nominal ¾ scale reading. This pin may also serve as the fourth positive thermal diode input.
AD_IN3	29	Analog Input (+12V3)	Analog Input for +12V Rail 3, for Memory/3GIO slots. External attenuation resistors required such that 12V is attenuated to 0.927V for nominal ¾ scale reading.
AD_IN4 (Vccp)	30	Analog Input (CPU1_Vccp)	Analog input for +Vccp (processor voltage) monitoring.
AD_IN5	31	Analog Input (+3.3V)	Analog input for +3.3V monitoring, nominal ¾ scale reading
GND	32	Ground	All grounds need to be tied together at the chip then taken to a low noise system ground. A voltage difference between grounds may cause erroneous results.
GND	33	Ground	All grounds need to be tied together at the chip then taken to a low noise system ground. A voltage difference between grounds may cause erroneous results.
GND	34	Ground	All grounds need to be tied together at the chip then taken to a low noise system ground. A voltage difference between grounds may cause erroneous results.
AD_IN6	35	Analog Input (Mem_Vtt)	Analog input for +0.984V monitoring, nominal ¾ scale reading.
AD_IN7	36	Analog Input (Gbit_Core)	Analog input for +0.984V S/B monitoring, nominal ¾ scale reading.
AD_IN8	37	Analog Input (-12V)	Analog input for -12V monitoring. External resistors required to scale to positive level. Full scale reading at 1.236V, , nominal ¾ scale reading. This pin may also be used to monitor an analog temperature sensor such as the LM60, since readings from this input can be routed to the fan control logic.
Address Select	38	3 level analog input	This input selects the lower two bits of the LM96194 SMBus slave address.
3.3V SB (AD_IN8)	39	POWER (V_{DD}) +3.3V standby power	V_{DD} power input for LM96194. Generally this is connected to +3.3V standby power. The LM96194 can be powered by +3.3V if monitoring in low power states is not required, but power should be applied to this input before any other pins. This pin also serves as the analog input to monitor the 3.3V stand-by (SB) voltage. It is necessary to bypass this pin with a 0.1 µF in parallel with 100 pF. A bulk capacitance of 10 µF should be in the near vicinity. The 100 pF should be closest to the power pin.
GND	40	Ground	Digital Ground. All grounds need to be tied together at the chip then taken to a low noise system ground. A voltage difference between grounds may cause erroneous results.
PWM1	41	Digital Output (Open-Drain)	Fan control output 1.
PWM2	42	Digital Output (Open-Drain)	Fan control output 2
VID0/VID7	43	Digital Input	Voltage Identification signal from the processor. Supports TTL input logic levels and AGTL compatible input logic levels.
VID1	44	Digital Input	Voltage Identification signal from the processor. Supports TTL input logic levels and AGTL compatible input logic levels.
VID2	45	Digital Input	Voltage Identification signal from the processor. Supports TTL input logic levels and AGTL compatible input logic levels.
VID3	46	Digital Input	Voltage Identification signal from the processor. Supports TTL input logic levels and AGTL compatible input logic levels.
VID4	47	Digital Input	Voltage Identification signal from the processor. Supports TTL input logic levels and AGTL compatible input logic levels.
VID5	48	Digital Input	Voltage Identification signal from the processor. Supports TTL input logic levels and AGTL compatible input logic levels.

Copyright © 2007–2013, Texas Instruments Incorporated

Server Terminology

A/D	Analog to Digital Converter
ACPI	Advanced Configuration and Power Interface
$\overline{\text{ALERT}}$	SMBus signal to bus master that an event occurred that has been flagged for attention.
ASF	Alert Standard Format
BMC	Baseboard Management Controller
BW	Bandwidth
DIMM	Dual in line memory module
DP	Dual-processor
ECC	Error checking and correcting
FRU	Field replaceable unit
FSB	Front side bus
FW	Firmware
Gb	Gigabit
GB	Gigabyte
Gbe	Gigabit Ethernet
GPI	General purpose input
GPIO	General purpose I/O
HW	Hardware
I^2C™	Inter integrated circuit (bus)
LAN	Local area network
LSb	Least Significant Bit
LSB	Least Significant Byte
LVDS	Low-Voltage Differential Signaling
LUT	Look-Up Table
Mb	Megabit
MB	Megabyte
MP	Multi-processor
MSb	Most Significant Bit
MSB	Most Significant Byte
MTBF	Mean time between failures
MTTR	Mean time to repair
NIC	Network Interface Card (Ethernet Card)
OS	Operating system
P/S	Power Supply
PCI	PCI Local Bus
PDB	Power Distribution Board
POR	Power On Reset
PS	Power Supply
SMBCLK and SMBDAT	These signals comprise the SMBus interface (data and clock). See SMBus Interface for more information.
VRD	Voltage Regulator Down - regulates Vccp voltage for a CPU

Copyright © 2007–2013, Texas Instruments Incorporated

Recommended Implementation

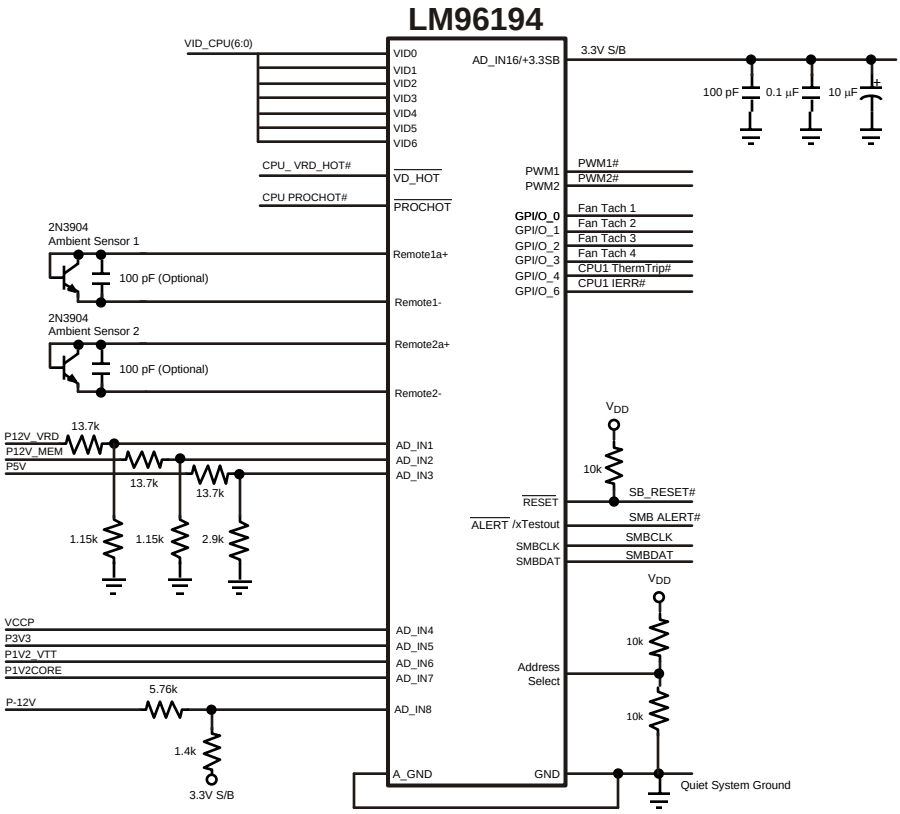

Figure 3. Recommended implementation without thermal diode connections

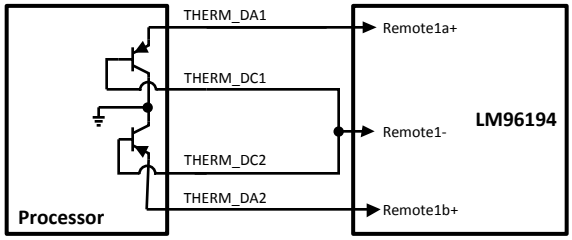

Note: 100 pF cap across each thermal diode is optional and should be placed close to the LM96194, if used. The maximum capacitance between thermal diode pins is 300 pF.

Figure 4. Thermal diode recommended implementation

Functional Description

The LM96194 provides 9 channels of voltage monitoring, 4 remote thermal diode monitors, an internal/local ambient temperature sensor, a PROCHOT monitor, 4 fan tachometers, 8 GPIOs, THERMTRIP monitor for masking error events, 1 sets of 7 VID inputs, an ALERT output and all the associated limit registers on a single chip, and communicates to the rest of the baseboard over the System Management Bus (SMBus). The LM96194 also provides 2 PWM outputs and associated fan control logic for controlling the speed of system fans. There are two sets of fan control logic, a lookup table and a PI (proportional/integral) loop controller. The lookup table and PI controller are interactive, such that the fans run at the fastest required speed. Upon a temperature or fan tach error event, the PWM outputs may be programmed such that they automatically boost to 100% duty cycle. A timer is included that sets the minimum time that the fans are in the boost condition when activated by a fan tach error.

 Copyright © 2007–2013, Texas Instruments Incorporated

The LM96194 incorporates Texas Instrument's TruTherm technology for precision “Remote Diode” readings of processors on 90nm process geometry or smaller. Readings from the external thermal diodes and the internal temperature sensor are made available as an 9-bit two's-complement digital value with the LSb representing 0.5°C. Filtered temperature readings are available as a 12-bit two's-complement digital value with the LSb representing 0.0625°C.

All of the analog inputs include internal scaling resistors, exept for AD_IN1, AD_IN2, AD_IN3 and AD_IN8. External scaling resistors are required for measuring ±12V. The inputs are converted to 8-bit digital values such that a nominal voltage appears at ¾ scale for positive voltages and ¼ scale for negative voltages. The analog inputs are intended to be connected to both baseboard resident VRDs and to standard voltage rails supplied by a SSI compliant power supply.

The LM96194 has logic that ties a set of dynamically moving VID inputs to their associated Vccp analog input for real time window comparison fault determination. Voltage mapping for VRD10, VRD10 extended and VRD11are supported by the LM96194. When VRD10 mode is selected GPI8 and GPI9 can be used to detect external error flags whose state is reflected in the status registers.

Error events are captured in two sets of mirrored status registers (BMC Error Status Registers and Host Status Registers) allowing two controllers access to the status information without any interference.

The LM96194's $\overline{\text{ALERT}}$ output supports interrupt mode or comparator mode of operation. The comparator mode is only functional for thermal monitoring.

The LM96194 provides a number of internal registers, which are detailed in the Registers section of this document.

MONITORING CYCLE TIME

When the LM96194 is powered up, it cycles through each temperature measurement followed by the analog voltages in sequence, and it continuously loops through the sequence. The total monitoring cycle time is not less than 100 ms, as this is the time period that most external micro-controllers require to read the register values.

Each measured value is compared to values stored in the limit registers. When the measured value violates the programmed limit, a corresponding status bit in the B_Error and H_Error Status Registers is set.

The $\overline{\text{PROCHOT}}$, tachometer and dynamic VID/Vccp monitoring is performed independently of the analog and temperature monitoring cycle.

ΣΔ A/D INHERENT AVERAGING

The ΣΔ A/D architecture filters the input signal. During one conversion many samples are taken of the input voltage and these samples are effectively averaged to give the final result. The output of the ΣΔ A/D is the average value of the signal during the sampling interval. For a voltage measurement, the samples are accumulated for 1.5 ms. For a temperature measurement, the samples are accumulated for 8.4 ms.

TEMPERATURE MONITORING

The LM96194 remote diode target is the embedded thermal diode found in a Xeon class processor in 90nm processes but can also work with any Intel® Corporation based processor in 90nm or 65nm. The LM96194 has an advanced thermal diode input stage using TI's TruTherm technology that reduces the spread in ideality found in sub-micron geometry thermal diodes. Internal analog filtering has been included in the thermal diode input stage thus minimizing the need for external thermal diode filter capacitors. In addition a digital filter has been included for the thermal diode temperature readings.

In some cases instead of using the embedded thermal diode, found on the Xeon processor, a diode connected 2N3904 transistor type can also be used. An example of this would be a MMBT3904 with its collector and base tied to the thermal diode REMOTE+ pin and the emitter tied to the thermal diode REMOTE− pin. Since the MMBT3904 is a surface mount device and has very small thermal mass, it measures the board temperature where it is mounted. The ideality and series resistance varies for different diodes. Therefore the LM96194 has register support to allow calibration selection between a 2N3904 or a Xeon processor. The LM96194 is optimized for typical Intel processors on 90nm or 65nm process or 2N3904 transistor. Other transistor types may be used but may have additional error that can be corrected for by programming the appropriate Zone Adjustment Offset register.

The LM96194 acquires temperature data from four different sources:

Copyright © 2007–2013, Texas Instruments Incorporated

- 4 external diodes (embedded in a processor or discrete)
- 1 internal diode (internal to the LM96194)
- 1 analog temperature sensors, such as the LM60, that are connected to the AD_15 pin
- a temperature value can be externally written into an LM96194 register from the SMBus.

All of these values, although not necessarily simultaneously, can be used to control fans, compared against limits, etc.

The temperature value registers are located at addresses 06h-09h, 50h–55h and 10h-23h. The temperature sources are referred to as "zones" for convenience:

Zone	Description
Zone 1a	Processor 1 remote diode 1 (REMOTE1a+, REMOTE1−)
Zone 1b	Processor 1 remote diode 2 (REMOTE1b+, REMOTE1–)
Zone 2a	MMBT3904 remote diode 1 (REMOTE2a+, REMOTE2−)
Zone 2b	MMBT2904 remote diode 2 (REMOTE2b+, REMOTE2–)
Zone 3	Internal LM96194 on-chip sensor; also accepts writes via SMBus
Zone 4	External digital temperature value from SMBus write to register 53h or external LM60 analog sensor connected to AD_IN8

"Remote Diode" TruTherm Mode

The processor "remote thermal diode" is more correctly described as a transistor. The LM93 treated the "remote diode" as a diode thus introducing inaccuracies. These inaccuracies have become more apparent as the geometry of processors is shrinking. The LM96194 can sense the "remote diode" using a new TruTherm technology that treats the remote device as a transistor. The TruTherm Mode is more accurate for processors on 90nm and smaller geometry. The LM96194 still supports the old diode method and is callibrated for 2N3904 transistor type.

Temperature Data Format

Most of the temperature data for the LM96194 is represented in three formats:

- 8-bit, two's complement byte with the LSb equal to 1.0 °C; this applies to temperature measurements as well as any temperature limit registers and some configuration registers.

Temperature(1)	Binary	Hex
+125°C	0111 1101	7Dh
+25°C	0001 1001	19h
+1.0°C	0000 0001	01h
0°C	0000 0000	00h
−1.0°C	1111 1111	FFh
−25°C	1110 0111	E7h
−55°C	1100 1001	C9h
−127°C	1000 0001	81h

(1) A value of 80h has a special meaning in the limit registers. It means that the temperature channel is masked. In addition, temperature readings of 80h indicate thermal diode faults.

Copyright © 2007–2013, Texas Instruments Incorporated

- 9–bit two's complement word with the LSb equal to 0.5°C; this applies to unfiltered temperature measurement extended resolution value registers

Temperature	Binary		Hex
	MSB	LSB	
+125.5°C	0111 1101	1000 0000	7D 80h
+25.5°C	0001 1001	1000 0000	19 80h
+0.5°C	0000 0000	1000 0000	00 80h
0°C	0000 0000	0000 0000	00 00h
−0.5°C	1111 1111	1000 0000	FF 80h
−25.5°C	1110 0111	1000 0000	E7 80h
−55.5°C	1100 1001	1000 0000	C9 80h
−127.5°C	1000 0001	1000 0000	81 80h

- 12–bit two's complement word with the LSb equal to 0.0625°C; this applies to extended filtered temperature measurement extended resolution value registers

Temperature	Binary		Hex
	MSB	LSB	
+125.0625°C	0111 1101	0001 0000	7D 10h
+25.0625°C	0001 1001	0001 0000	19 10h
+1.0625°C	0000 0001	0001 0000	01 10h
0°C	0000 0000	0000 0000	00 00h
−0.0625°C	1111 1111	1111 0000	FF F0h
−25.0625°C	1110 0111	1111 0000	E7 F0h
−55.0625°C	1100 1001	1111 0000	C9 F0h
−127.0625°C	1000 0000	1111 0000	80 F0h

Some fan control configuration registers use four bits and have an unsigned binary format, please see the FAN CONTROL configuration register descriptions for further details on this 4-bit format.

Thermal Diode Fault Status

The LM96194 provides for indications of a fault (open or short circuit) with the remote thermal diodes. Before a remote diode conversion is updated, the status of the remote diode is checked for an open or short circuit condition. If such a fault condition occurs, a status bit is set in the status register. A short circuit is defined as the diode pins connected to each other. When an open or short circuit is detected, the corresponding temperature register is set to 80h.

EVENT ERRORS FOR FAN BOOST

Temperature boost error and tachometer error events can cause the fan control PWM output(s) to go to full on. A boost temperature error event will cause both PWM outputs to go to full on, while a tachometer event can be either bound to PWM1 or PWM2.

A fan boost temperature event occurs if any of the four temperature zones exceeds the temperature Fan Boost Limit for that zone. Once a temperature has exceed the boost limit, it must drop to a value equal to the boost limit minus the boost hysteresis before the boost condition is deactivated. The default setting for Zones 1 and 2 is 60°C and for Zones 3 and 4 it is 35°C.

The tachometer error boost function is enabled via the Tachometer Fan Boost Control register. Depending on the setting of the tachometer to PWM binding bits one or both of the PWM outputs will go to 100% duty cycle upon the detection of an unmasked Fan Tachometer Error Event. A Fan Tachometer Error event occurs when a tachometer reading exceeds the value set in it's FAN Tach Limit register. Once the error event ends the PWM output(s) will remain at 100% duty cycled for a time interval, Tach Boost Timeout, as programmed in the Tachometer Fan Boost Control register. If the tachometer error event returns during the middle of the timout interval the Tach Boost Timeout interval will be reset and restart once the error event ends.

Copyright © 2007–2013, Texas Instruments Incorporated

VOLTAGE MONITORING

The LM96194 contains inputs for monitoring voltages. Scaling is such that the correct value refers to approximately 3/4 scale or 192 decimal on all inputs, except for the ±12V. Scaling is accomplished by using internal resistor dividers, except for the ±12V. The typical input resistance of these inputs is 200 k ohms. Input voltages are converted by an 8-bit Delta-Sigma (ΔΣ) A/D. The Delta-Sigma A/D architecture provides inherent filtering and spike smoothing of the analog input signal.

The ±12V inputs must be scaled externally. A full scale reading is achieved when 1.236V is applied to these inputs. For optimum performance the +12V should be scaled to provide a nominal ¾ full scale reading, while the −12V should be scaled to provide a nominal ¼ scale reading. The thevenin resistance at the pin should be kept between 1 kΩ and 7 kΩ.

The −12V monitoring is particularly challenging. It is required that an external offset voltage and external resistors be used to bring the −12V rail into the positive input voltage region of the A/D input. It is suggested that the supply rail for the LM96194 device be used as the offset voltage. This voltage is usually derived from the P/S 5V stand-by voltage rail via a ±1% accurate linear regulator. In this fashion we can always assume that the offset voltage is present when the −12V rail is present as the system cannot be turned on without the 3.3V stand-by voltage being present.

Table 2. Voltage vs Register Reading

Pin	Normal Use	Nominal Voltage	Register Reading at Nominal Voltage	Maximum Voltage	Register Reading at Maximum Voltage	Minimum Voltage	Register Reading at Minimum Voltage	Absolute Maximum Range
AD_IN1	+12V1	0.927V	C0h	1.236V	FFh	0V	00h	−0.3V to (V_{DD} + 0.05V)
AD_IN2	+12V2	0.927V	C0h	1.236V	FFh	0V	00h	−0.3V to (V_{DD} + 0.05V)
AD_IN3	+12V3	0.927V	C0h	1.236V	FFh	0V	00h	−0.3V to (V_{DD} + 0.05V)
AD_IN4	Vccp1	1.20V	C0h	1.60V	FFh	0V	00h	−0.3V to +6.0V
AD_IN5	+3.3V	3.30V	C0h	4.40V	FFh	0V	00h	−0.3V to +6.0V
AD_IN6	Mem_Vtt	0.984V	C0h	1.312V	FFh	0V	00h	−0.3V to +6.0V
AD_IN7	Gbit_Core	0.984V	C0h	1.312V	FFh	0V	00h	−0.3V to +6.0V
AD_IN8	−12V	0.309V	40h	1.236V	FFh	0V	00h	−0.3V to (V_{DD} + 0.05V)
AD_IN9	+3.3V S/B	3.3V	C0h	3.6V	D1h	3.0V	AEh	−0.3V to +6.0V

The nominal voltages listed in this table are only typical values. Voltage rails with different nominal voltages can be monitored, but the register reading at the nominal value is no longer C0h.

AD_IN9 is also the power pin of the LM96194, therefore special limitations apply to this AD input. The specified operational voltage range for the LM96194 is 3.0V to 3.6V, therefore the voltage input to this pin is limited by this restriction. Care should also be taken not to apply more than 6V to this pin to prevent catastrophic damage.

RECOMMENDED EXTERNAL SCALING RESISTORS FOR +12V POWER RAILS

The +12V inputs require external scaling resistors. The resistors need to scale 12V down to 0.927V.

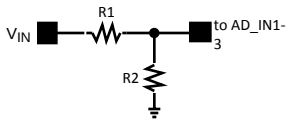

Figure 5. Required External Scaling Resistors for +12V Power Input

To calculate the required ratio of R1 to R2 use this equation:

$$\frac{R1}{R2} = \frac{12}{0.927} - 1 = 11.04498 \quad (1)$$

Copyright © 2007–2013, Texas Instruments Incorporated

It is recommended that the equivalent thevenin resistance of the divider be between 1k and 7k to minimize errors caused by leakage currents at extreme temperatures. The best values for the resistors are: R1=13.7 kΩ and R2=1.15 kΩ. This yields a ratio of 11.94498, which has a +0.27% deviation from the theoretical. It is also recommended that the resistors have ±1% tolerance or better.

Each LSB in the voltage value registers has a weight of 12V / 192 = 62.5 mV. To calculate the actual voltage of the +12V power input, use the following equation:

$$V_{IN} = (\text{8-bit value register code}) \times (62.5\ \text{mV}) \tag{2}$$

RECOMMENDED EXTERNAL SCALING CIRCUIT FOR −12V POWER INPUT

The −12V input requires external resistors to level shift the nominal input voltage of −12V to +0.309V.

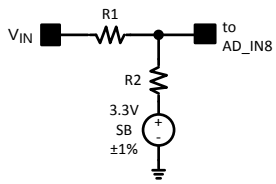

Figure 6. Required External Level Shifting Resistors for −12V Power Input

The +3.3V standby voltage is used as a reference for the level shifting. Therefore, the tolerance of this voltage directly effects the accuracy of the −12V reading. To minimize ratio errors, a tolerance of better than ±1% should be used. It is recommended that the equivalent thevenin resistance of the divider is between 1k and 7k to minimize errors caused by leakage currents at extreme temperatures. To calculate the ratio of R1 to R2 use this equation:

$$\frac{R1}{R2} = \frac{(V_{IN} - V_{REF})}{(AD_IN - V_{REF})} - 1 \tag{3}$$

where V_{IN} is the nominal input voltage of −12V, V_{REF} is the reference voltage of +3.3V and AD_IN is the voltage required at the AD input for a ¼ scale reading or 0.309V.

Therefore, for this case:

$$\frac{R1}{R2} = \frac{(-12 - 3.3)}{(0.309 - 3.3)} - 1 = 4.11535 \tag{4}$$

Using standard 1% resistor values for R1 of 5.76 kΩ and R2 of 1.4 kΩ yields an R1 to R2 ratio of 4.1143.

The input voltage V_{IN} can be calculated using the value register reading (VR) using this equation:

$$V_{IN} \quad \frac{R1}{R2} = (\quad + 1) \times [(1.236V \times \frac{VR}{256} \quad) - 3.3V] + 3.3V$$
$$= (24.69\ \text{mV} \times VR) - 13.5771V \tag{5}$$

The table below summarizes the theoretical voltage values for value register readings near −12V.

Value Register	V_{IN}	% Δ from −12V
15	-13.2068	-10.0563
16	-13.1821	-9.8505
17	-13.1574	-9.6448
18	-13.1327	-9.4390
19	-13.1080	-9.2332
20	-13.0833	-9.0275
21	-13.0586	-8.8217
22	-13.0339	-8.6159
23	-13.0092	-8.4101

Copyright © 2007–2013, Texas Instruments Incorporated

Value Register	V_{IN}	% Δ from −12V
24	-12.9845	-8.2044
25	-12.9598	-7.9986
26	-12.9351	-7.7928
27	-12.9104	-7.5871
28	-12.8858	-7.3813
29	-12.8611	-7.1755
30	-12.8364	-6.9698
31	-12.8117	-6.7640
32	-12.7870	-6.5582
33	-12.7623	-6.3524
34	-12.7376	-6.1467
35	-12.7129	-5.9409
36	-12.6882	-5.7351
37	-12.6635	-5.5294
38	-12.6388	-5.3236
39	-12.6141	-5.1178
40	-12.5894	-4.9121
41	-12.5648	-4.7063
42	-12.5401	-4.5005
43	-12.5154	-4.2947
44	-12.4907	-4.0890
45	-12.4660	-3.8832
46	-12.4413	-3.6774
47	-12.4166	-3.4717
48	-12.3919	-3.2659
49	-12.3672	-3.0601
50	-12.3425	-2.8544
51	-12.3178	-2.6486
52	-12.2931	-2.4428
53	-12.2684	-2.2370
54	-12.2438	-2.0313
55	-12.2191	-1.8255
56	-12.1944	-1.6197
57	-12.1697	-1.4140
58	-12.1450	-1.2082
59	-12.1203	-1.0024
60	-12.0956	-0.7967
61	-12.0709	-0.5909
62	-12.0462	-0.3851
63	-12.0215	-0.1793
64	-11.9968	0.0264
65	-11.9721	0.2322
66	-11.9474	0.4380
67	-11.9228	0.6437
68	-11.8981	0.8495
69	-11.8734	1.0553
70	-11.8487	1.2610
71	-11.8240	1.4668
72	-11.7993	1.6726

Copyright © 2007–2013, Texas Instruments Incorporated

Value Register	V_{IN}	% Δ from −12V
73	-11.7746	1.8784
74	-11.7499	2.0841
75	-11.7252	2.2899
76	-11.7005	2.4957
77	-11.6758	2.7014
78	-11.6511	2.9072
79	-11.6264	3.1130
80	-11.6018	3.3188
81	-11.5771	3.5245
82	-11.5524	3.7303
83	-11.5277	3.9361
84	-11.5030	4.1418
85	-11.4783	4.3476
86	-11.4536	4.5534
87	-11.4289	4.7591
88	-11.4042	4.9649
89	-11.3795	5.1707
90	-11.3548	5.3765
91	-11.3301	5.5822
92	-11.3054	5.7880
93	-11.2807	5.9938
94	-11.2561	6.1995
95	-11.2314	6.4053
96	-11.2067	6.6111
97	-11.1820	6.8168
98	-11.1573	7.0226
99	-11.1326	7.2284
100	-11.1079	7.4342
101	-11.0832	7.6399
102	-11.0585	7.8457
103	-11.0338	8.0515
104	-11.0091	8.2572
105	-10.9844	8.4630
106	-10.9597	8.6688
107	-10.9351	8.8745
108	-10.9104	9.0803
109	-10.8857	9.2861
110	-10.8610	9.4919
111	-10.8363	9.6976
112	-10.8116	9.9034
113	-10.7869	10.1092

ADDING EXTERNAL SCALING RESISTORS TO OTHER ANALOG INPUTS

All analog inputs, except AD_IN1 through AD_IN3 and AD_IN8, include internal resistor dividers. Further scaling of AD_IN4 through AD_IN7 inputs with external scaling resistors is possible if the errors due to the internal dividers are accounted. The internal resistors, $R_{IN}1$ + $R_{IN}2$ shown in Figure 7, will present to the external divider a minimum resistive load of 140 kΩ.

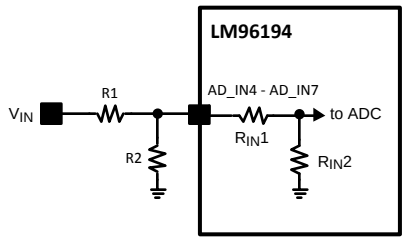

Figure 7. Internal Resistors, $R_{IN}1 + R_{IN}2$

DYNAMIC Vccp MONITORING USING VID

The AD_IN4 (CPU Vccp) input is dynamically monitored using the VIDx inputs to determine the limits. The dynamic comparisons operate independently of the static comparisons which use the statically programmed limits. The LM96194 supports 3 different specifications for the Voltage Regulator (VRM or VRD) used on motherboards with Intel CPUs with four different VID Modes of operation. The Voltage Regulator Specifications supported are the VRD10/VRM10, VRD10.2 Extended and VRD11/VRM11, and in this document they will be referred to as the VRD10, VRD10.2 and VRD11 specifications, respectively.

According to the VRD 10 specification when a VID signal is ramping to a new value, it steps by one LSB at a time, and one step occurs every 5 µs. In worse case, up to 20 steps may occur at once over 100 µs. The Vccp voltage from the VRD has to settle to the new value within 50 µs of the last VID change. The LM96194 expects that the VID changes will not occur more frequently than every 5 µs in the VRD10 mode. Similarly the LM96194 can support the timing requirements of the VRD10.2 and VRD11 specifications.

The VID signals can be changed by the processor under program control, by internal thermal events or by external control, like force $\overline{\text{PROCHOT}}$.

The reference voltages selected by each value of the VID code can be found in the different VRM/VRD specifications. Transient VID values caused by line-to-line skew are ignored by the LM96194. See the VRM/VRD specifications for the worst case line-to-line skew.

The LM96194 averages the VID values over a sampling window to determine the average voltage that the VID input was indicating during the sampling window. At the completion of a voltage conversion cycle the LM96194 performs limit comparisons based on average VID values and not instantaneous values. The upper limit is determined by adding the upper limit offset to the average voltage indicated by VID. The lower limit is determined by subtracting the lower limit offset from average voltage indicated by VID. If the AD_IN4 voltage falls outside the upper and lower limits, an error event is generated. Dynamic and static comparisons are performed once every 100 ms. The averaging time interval is 1.5 ms.

If at any time during the Vccp sampling window, the VID code indicates that the VRD/VRM should turn off its output, the dynamic Vccp checking is disabled for that sample.

The comparison accuracy is ±25 mV, therefore the comparison limits must be set to include this error. Since the Vccp voltage may be in the process of settling to a new value (due to a VID change), this settling should be taken into account when setting the upper and lower limit offsets.

The LM96194 has a limitation on the upper limit voltage for dynamic Vccp checking. The upper limit cannot exceed 1.5875V. If the sum of the voltage indicated by VID and the upper offset voltage exceed 1.5875, the upper limit checking is disabled.

Pin 17 has a dual purpose. When VRD10 mode is selected they can be used as general purpose inputs whose state is reflected the BMC and Host Error Status registers. In the other VRD modes they are used as a VID6 input.

MONITORING ANALOG TEMPERATURE SENSORS

The AD_IN8 reading can be routed to the fan control logic to facilitate the use of external temperature sensors such as the LM60. When these inputs are used for temperature sensing the digital output returned is in signed format, that is the MSb is inverted.

The following table lists critical parameters necessary for converting the binary data to temperature.

 Copyright © 2007–2013, Texas Instruments Incorporated

Input	V NOM	Full Scale (code 256) V	254.5 code V	mV /LSb	LM60 deg /LSb	LM50 deg /LSb
AD_ IN8	0.309 (¼ scale)	1.2360	1.2288	4.8	0.7725	0.4828

The following table lists the equations to use for converting the AD_IN8 Digital Value (DV) to a temperature value.

Input	LM60 Equation	LM50 Equation
AD_IN8	(DV + 40.18) × 0.7725 (6)	(DV + 24.44) × 0.4828 (7)

The following table lists the ideal values generated when using the LM60 at different temperatures.

Temp	LM60 Ideal Vout	AD_IN8 Reading	
		Signed Decimal	Signed Hex
0	0.424	-40.18	D8
25	0.5803	-8	F8
30	0.6115	-1	FF
35	0.6428	5	5
40	0.6740	12	C
45	0.7053	18	12
50	0.7365	25	19
55	0.7678	31	1F
60	0.7990	37	25
65	0.8303	44	2C
70	0.8615	50	32
75	0.8928	57	39
80	0.9240	63	3F
85	0.9553	70	46
90	0.9865	76	4C
95	1.0178	83	53
100	1.0490	89	59
105	1.0803	96	60
110	1.1115	102	66
115	1.1428	109	6D
120	1.1740	115	73
125	1.2053	122	7A
130	1.2365	127	7F

The following table lists the expected ideal digital values when using the LM50.

Temp	LM50 Ideal Vout	AD_IN8 Reading	
		Signed Decimal	Signed Hex
0	0.5	-24.44	E8
25	0.7500	27	1B
30	0.8000	38	26
35	0.8500	48	30
40	0.9000	58	3A
45	0.9500	69	45
50	1.0000	79	4F

Copyright © 2007–2013, Texas Instruments Incorporated

Temp	LM50 Ideal Vout	AD_IN8 Reading	
		Signed Decimal	Signed Hex
55	1.0500	89	59
60	1.1000	100	64
65	1.1500	110	6E
70	1.2000	121	79
75	1.2500	127	7F
80	1.3000	127	7F
85	1.3500	127	7F
90	1.4000	127	7F
95	1.4500	127	7F
100	1.5000	127	7F
105	1.5500	127	7F
110	1.6000	127	7F
115	1.6500	127	7F
120	1.7000	127	7F
125	1.7500	127	7F
130	1.8000	127	7F

$\overline{\text{PROCHOT}}$ BACKGROUND INFORMATION

$\overline{\text{PROCHOT}}$ is an output from a processor that indicates that the processor has reached a predetermined temperature trip point. At this trip point the processor can be programmed to lower its internal operating frequency and/or lower its supply voltage by changing the value of the 6 bit VID that it supplies to the VRD. The final VID setting and the rate at which it transitions to the new VID is programmable within the processor.

If $\overline{\text{PROCHOT}}$ is 100% throttled, it does not mean that the CPU is not executing, but it may mean that the CPU is about to encounter a thermal trip if the processor temperature continues to rise.

$\overline{\text{PROCHOT}}$ is also an input to some processors so that an external controller can force a thermal throttle based on external events.

$\overline{\text{PROCHOT}}$ is no longer asserted by the processor when the temperature drops below the predefined thermal trip point.

Oscillation around the trip point is avoided by the processor by requiring that the temperature be above/below the trip point for a predetermined period of time. A counter inside the processor is used to track this time and it has to be incremented to a max count for an above temperature trip and decremented to zero when below the trip temperature setting, to remove the trip.

The minimum time for $\overline{\text{PROCHOT}}$ assertion is time dependant on the FSB frequency. The minimum time that the processor asserts $\overline{\text{PROCHOT}}$ is estimated to be 187 µs.

$\overline{\text{PROCHOT}}$ MONITORING

$\overline{\text{PROCHOT}}$ monitoring is meant to achieve two goals. One goal is to measure the percentage of time that $\overline{\text{PROCHOT}}$ is asserted over a programmable time period. The result of this measurement can be read from an 8-bit register where one LSB equals 1/256th of the PROCHOT Time Interval (0.39%). The second goal is to have a status register that indicates, as a coarse percentage, the amount of time a processor has been throttled. This second goal is required in order to communicate information over the NIC using ASF, i.e. status can be sent, not values.

Copyright © 2007–2013, Texas Instruments Incorporated

To achieve the first goal, the PROCHOT input is monitored over a period of time as defined by the PROCHOT Time Interval Register. At the end of each time period, the 8-bit measurement is transferred to the Current PROCHOT register. Also at the end of each measurement period, the Current PROCHOT register value is moved to the Average PROCHOT register by adding the new value to the old value and dividing the result by 2. Note that the value that is averaged into the Average PROCHOT register is not the new measurement but rather the previous measurement. If the SMBus writes to the Current PROCHOT register, the capture cycle restarts. Also note, that a strict average of two 8-bit values may result in Average PROCHOT reflecting a value that is one LSB lower than the Current PROCHOT in steady state.

It should be noted that the 8-bit result has a positive bias of one half of an LSB. This is necessary because a value of 00h represents that PROCHOT was not asserted at all during the sampling window. Any amount of throttling results in a reading of 01h.

The following table demonstrates the mapping for the 8-bit result:

8–Bit Result	Percentage Thottled
0	Exactly 0%
1	Between 0% and 0.39%
2	Between 0.39% and 0.78%
…	…
n	Between (n-1)/256 and n/256
…	…
253	Between 98.4% and 98.8%
254	Between 98.8% and 99.2%
255	Greater than 99.2%

To achieve the second goal, the LM96194 has several comparators that compare the measured percentage reading against several fixed and 1 variable value. The variable value is user programmable.

The result of these comparisons generates several error status bits described in the following table:

Status Description	Comparison Formula
100% Throttle	PROCHOT was never de-asserted during monitoring interval.
Greater than or equal to 75% and less than 100%	193 ≤ measured value and not 100%
Greater than or equal to 50% and less than 75%	129 ≤ measured value < 193
Greater than or equal to 25% and less than 50%	65 ≤ measured value < 129
Greater than or equal to 12.5% and less than 25%	33 ≤ measured value < 65
Greater than 0% and less than 12.5%	0 < measured value < 33
Greater than 0%	0 < measured value
Greater than user limit	user limit < measured value

These status bits are reflected in the PROCHOT Error Status Register.

In S3 and S4/5 sleep states, the PROCHOT Monitoring function does not run. VRD_Hot is disabled from activating PROCHOT pin in S3 and S4/5. The Current PROCHOT registers are reset to 00h and the Average PROCHOT registers hold their current state. Once the sleep state changes back to S0, the monitoring function is restarted. After the first PROCHOT measurement has been made, the measurement is written directly into the Current and Average PROCHOT registers without performing any averaging. Averaging returns to normal on the second measurement.

PROCHOT OUTPUT CONTROL

In some cases, it is necessary for the LM96194 to drive the PROCHOT output low. There are several conditions that cause this to happen.

Whenever one of the VRD_HOT input is asserted, the PROCHOT pin is asserted by the LM96194. The response time is less than 10 µs. When the VRD_HOT input is de-asserted, the PROCHOT pin is no longer asserted by the LM96194. This response is disabled in sleep states 3 and 4/5 and can be disabled through the PROCHOT Control register.

Software can manually program the LM96194 to drive a PWM type signal onto $\overline{\text{PROCHOT}}$. This is done via the $\overline{\text{PROCHOT}}$ Override register. See the description of this register for more details.

FAN SPEED MEASUREMENT

The fan tach circuitry measures the period of the fan pulses by enabling a counter for two periods of the fan tach signal. The accumulated count is proportional to the fan tach period and inversely proportional to the fan speed. All four fan tach signals are measured within 1 second.

Fans in general do not over-speed if run from the correct voltage, so the failure condition of interest is under speed due to electrical or mechanical failure. For this reason only low-speed limits are programmed into the limit registers for the fans. It should be noted that, since fan period rather than speed is being measured, a fan tach error event occurs when the measurement *exceeds* the limit value.

SMART FAN SPEED MEASUREMENT

If a fan's speed is varied using PWM drive of either of the fans power pins, the tachometer output of the fan is corrupted. The LM96194 includes smart tachometer circuitry that allows an accurate tachometer reading to be achieved despite the signal corruption. In smart tach mode all four signals are measured within 4 seconds.

A smart tach capture cycle works according to the following steps:

1. Both PWM outputs are synchronized such that they activate simultaneously.
2. Both PWM output active times are extended for up to 50 ms.
3. The number of tach signal periods during the 50 ms interval are tracked:
   - **a)** If less than 1 period is sensed during the 50 ms extension the result returned is 3FFh.
   - **b)** After one period occurs the count for that period is memorized.
   - **c)** If during the 50 ms interval 2 periods do not occur, the tach value reported is the 1 period count multiplied by 2.
   - **d)** If 2 periods do occur, the 2 period count is loaded into the value register and the 50 ms PWM extension is terminated.

The lowest two bits in each of the Fan Tach value registers are reserved. The smart tach feature takes advantage of these bits. In normal tach mode, these bits return 00. In smart tach mode the two bits determine the accuracy level of the reading. 11 is most accurate (2 periods used) and 10 is the least accurate (1 period used). If less than 1 period occurred during the measurement cycle, the lower two bits are set to 10.

In smart fan tach mode, the TACH_EDGE field is honored in the LM96194 Status/Control register. If only one edge type is active, the measurement always uses that edge type (rising or falling). If both are active, the measurement uses whichever edge type occurs first.

Typically the minimum RPM captured by smart fan tach mode is 900 RPM for a fan that produces two pulses per revolution at about 50% duty cycle.

Inputs/Outputs

Besides all the pins associated with sensor inputs the LM96194 has several pins that are assigned for other specific functions.

$\overline{\text{ALERT}}$ OUTPUT

The $\overline{\text{ALERT}}$ output is an active-low open drain output signal. The $\overline{\text{ALERT}}$ output is used to signal a micro-controller that one or more sensors have crossed their corresponding limit thresholds. This is generally not a fatal event unless the micro-controller decides it to be.

If enabled, the $\overline{\text{ALERT}}$ output is asserted whenever any bit in any BMC Error Status register is set (with the exception of the fixed $\overline{\text{PROCHOT}}$ threshold bits). By definition, when $\overline{\text{ALERT}}$ is enabled, it always matches the inverse of the BMC_ERR bit in the LM96194 Status/Control register. When the $\overline{\text{ALERT}}$ output is disabled, an alert event can still be determined by reading the state of the BMC_ERR bit.

The $\overline{\text{ALERT}}$ functions like an interrupt. The LM96194 does not support the SMBus ARA (Alert Response Address) protocol.

 Copyright © 2007–2013, Texas Instruments Incorporated

$\overline{\text{ALERT}}$ is only de-asserted when there are no error status bits set in any BMC Error Status registers. Alternatively, software can disable the $\overline{\text{ALERT}}$ output to cause it to de-assert. The $\overline{\text{ALERT}}$ output re-asserts once enabled if any BMC Error Status register bits are still set.

The $\overline{\text{ALERT}}$ output also functions in comparator mode for thermal events, that is the $\overline{\text{ALERT}}$ output will be asserted for unmasked thermal error events and will de-assert immediately when the error event ceases. The operation of the $\overline{\text{ALERT}}$ output is controlled by the LM96194 Configuration register.

Further information on how the $\overline{\text{ALERT}}$ output behaves can be found in MASKING, ERROR STATUS AND ALERT.

$\overline{\text{RESET}}$ INPUT/OUTPUT

This pin acts as an active low reset output when power is applied to the LM96194. It is asserted when the LM96194 first sees a voltage that exceeds the internal POR level on its +3.3V S/B V_{DD} input. The internal registers of the LM96194 are reset to their defaults when power is applied.

After this reset has completed, the $\overline{\text{RESET}}$ pin becomes an input. When an external device asserts $\overline{\text{RESET}}$, the LM96194 clears the LOCK bit in the LM96194 Configuration register. This feature allows critical registers to be locked and provides a controlled mechanism to unlock them.

If the LM96194 $\overline{\text{RESET}}$ is not used it must be tied high through an external resistive pull-up to prevent LM96194 malfunction.

Within 10 µsec of asserting $\overline{\text{RESET}}$ externally, the Sleep State Control register shall be automatically set to S4/5. This causes several error events to be masked according to the S4/5 masking definitions. Refer to the register descriptions for more information. $\overline{\text{RESET}}$ may not be detected if it is asserted for less than 4 µsec.

PWM1 AND PWM2 OUTPUTS

The PWM outputs are used to control the speed of fans. The duty cycle of each output is automatically controlled by the temperature of one or more temperature zones. They are also influenced by various other inputs and registers. See FAN CONTROL for further information on the behavior of the PWM outputs.

$\overline{\text{VRD_HOT}}$ INPUT

These inputs monitor the thermal sensor associated with each processor VRD on a baseboard. When one of the inputs is activated, it indicates that the VRD has exceeded a predetermined temperature threshold. The LM96194 responds by gradually increasing the duty cycle of any PWM outputs that are bound to the corresponding processor and setting the appropriate error status bits. The $\overline{\text{PROCHOT}}$ signal is also asserted. See the FAN CONTROL and the $\overline{\text{PROCHOT}}$ OUTPUT CONTROL for more information.

GPIO and GPI PINS

The LM96194 has 8 GPIO pins than can act as either as general purpose inputs or outputs and 1 GPI pin that can act as general purpose input. Each can be configured and controlled independently. When acting as an input the pin can be masked to prevent it from setting a corresponding bit in the GPI Error status registers. Some of these pins can also function as tachometer or VID inputs.

FAN TACH INPUTS

The fan inputs are Schmitt-Trigger digital inputs. Schmitt-Trigger input circuitry is included to accommodate slow rise and fall times typical of fan tachometer outputs.

The maximum input signal range is 0V to +6.0V, even when V_{DD} is less than 5V. In the event that these inputs are supplied from fan outputs, which exceed 0V to +6.0V, either resistive attenuation of the fan signal or diode clamping must be included to keep inputs within an acceptable range, thereby preventing damage to the LM96194.

Hot plugging fans can involve spikes on the Tach signals of up to 12V so diode protection or other circuitry is required. For “Hot Plug” fans, external clamp diodes may be required for signal conditioning.

Copyright © 2007–2013, Texas Instruments Incorporated

SMBus Interface

The SMBus is used to communicate with the LM96194. LM96194 SMBus interface lines are designed to be tolerant to 5V signalling. Necessary pull-ups are located on the baseboard. Care should be taken to ensure that only one pull-up is used for each SMBus signal. The SMBus interface obeys the SMBus 2.0 protocols and signaling levels.

The SMBus interface of the LM96194 does not load down the SMBus if no power is applied to the LM96194. This allows a module containing the LM96194 to be powered down and replaced, if necessary.

SMBus ADDRESSING

Each time the LM96194 is powered up, it latches the assigned SMBus slave address (determined by ADDR_SEL) during the first valid SMBus transaction in which the first five bits of the targeted slave address match those of the LM96194 slave address. Once the address has been latched, the LM96194 continues to use that address for all future transactions until power is lost.

The address select input detects three different voltage levels and allows for up to 3 devices to exist in a system. The address assignment is as follows:

Address Select Pin (ADDR_SEL)	Slave Address Assignment
High	01011 01
$V_{DD}/2$	01011 10
Low	01011 00

DIGITAL NOISE EFFECT ON SMBus COMMUNICATION

Noise coupling into the digital lines (greater than 150mV), overshoot greater than V_{DD} and undershoot less than GND, may prevent successful SMBus communication with the LM96194. SMBus No Acknowledge (NACK) is the most common symptom, causing unnecessary traffic on the bus. Although, the SMBus maximum frequency of communication is rather low (100 kHz max), care still needs to be taken to ensure proper termination within a system with multiple parts on the bus and long printed circuit board traces. The LM96194 includes on chip low-pass filtering of the SMBCLK and SMBDAT signals to make it more noise immune. Minimize noise coupling by keeping digital traces out of switching baseboard areas as well as ensuring that digital lines containing high speed data communications cross at right angles to the SMBDAT and SMBCLK lines.

GENERAL SMBus TIMING

The SMBus 2.0 specification defines specific conditions for different types of read and write operations but in general the SMBus protocol operates as follows:

The master initiates data transfer by establishing a START condition, defined as a high to low transition on the serial data line SMBDAT while the serial clock line SMBCLK remains high. This indicates that a data stream follows. All slave peripherals connected to the serial bus respond to the START condition, and shift in the next 8 bits. This consists of a 7-bit slave address (MSB first) plus a R/W bit, which determines the direction of the data transfer, i.e. whether data is written to or read from the slave device (0 = write, 1 = read).

The peripheral whose address corresponds to the transmitted address responds by pulling the data line low during the low period before the ninth clock pulse, known as the Acknowledge Bit, and holding it low during the high period of this clock pulse. All other devices on the bus now remain idle while the selected device waits for data to be read from or written to it. If the R/W bit is a 0 then the master writes to the slave device. If the R/W bit is a 1 the master reads from the slave device.

Data is sent over the serial bus in sequences of 9 clock pulses, 8 bits of data followed by an Acknowledge bit. Data transitions on the data line must occur during the low period of the clock signal and remain stable during the high period, as a low to high transition when the clock is high may be interpreted as a STOP signal.

If the operation is a write operation, the first data byte after the slave address is a command byte. This tells the slave device what to expect next. It may be an instruction, such as telling the slave device to expect a block write, or it may simply be a register address that tells the slave where subsequent data is to be written.

Copyright © 2007–2013, Texas Instruments Incorporated

Since data can flow in only one direction as defined by the R/W bit, it is not possible to send a command to a slave device during a read operation. Before doing a read operation, it is necessary to do a write operation to tell the slave what sort of read operation to expect and/or the address from which data is to be read.

When all data bytes have been read or written, stop conditions are established. In WRITE mode, the master will allow the data line to go high during the 10th clock pulse to assert a STOP condition. In READ mode, the slave drives the data not the master. For the bit in question, the slave is looking for an acknowledge and the master doesn't drive low. This is known as 'No Acknowledge'. The master then takes the data line low during the low period before the 10th clock pulse, then high during the 10th clock pulse to assert a STOP condition.

Note, a repeated START may be given only between a write and read operation that are in succession.

SMBus ERROR SAFETY FEATURES

To provide a more robust SMBus interface, the LM96194 incorporates a timeout feature for both SMBCLK and SMBDAT. If either signal is low for a long period of time (see SMBus AC Specs), the LM96194 SMBus state machine reverts to the idle state and waits for a START signal. Large block transfers of all zeros should be avoided if the SMBCLK is operating at a very low frequency to avoid accidental timeouts. Pulling the Reset pin low does not reset the SMBus state machine. If the LM96194 SMBDAT pin is low during a system reset, the LM96194's state machine timeouts and resets automatically. If the LM96194's SMBDAT pin is high during a system reset, the first assertion of a start by the master resets the LM96194's interface state machine.

Although it is a violation of the SMBus specification, in some cases a START or STOP signal occurs in the middle of a byte transfer instead of coming after an acknowledge bit. If this occurs, only a partial byte was transferred. If a byte was being written, it is aborted and the partial byte is not committed. If a byte was being read from a read-to-clear register, the register is not cleared.

SERIAL INTERFACE PROTOCOLS

The LM96194 contains volatile registers, the registers occupy address locations from 00h to EFh.

Data can be read and written as a single byte, a word, or as a block of several bytes. The LM96194 supports the following SMBus/I^2C transactions/protocols:

- Send Byte
- Write Byte
- Write Word
- SMBus Write Block
- I^2C Block Write
- Read Byte
- Read Word
- SMBus Read Block
- SMBus Block-Write Block-Read Process Call
- I^2C Block Read

In addition to these transactions the LM96194 supports a few extra items and also has some behavior that must be defined beyond the SMBus 2.0 specification. No other SMBus 2.0 transactions are supported (PEC, ARA etc.).

The SMBus specification defines several protocols for different types of read and write operations. The ones used in the LM96194 are discussed below. The following abbreviations are used in the diagrams:

S — START

P — STOP

R — READ

W — WRITE

A — ACKNOWLEDGE

/A — NO ACKNOWLEDGE

Address Incrementing

The established base address does not increment. Repeatedly reading without re-establishing a new base address returns data from the same address each time. I^2C read transactions can use this information and skip reestablishing the base address, when only one master is used. One exception to this rule exists when a block write and block read is used to emulate a block write/read process call. This is detailed later, see the SMBus Block-Write Block-Read Process Call description.

Block Command Code Summary

Block command codes control the block read and write operations of the LM96194 as summarized in the following table:

Command Code Name	Value	Description
Block Write Command	F0h	SMBus Block Write Command Code
Block Read Command	F1h	SMBus Block Write/Read Process Call
Fixed Block 0	F2h	Fixed Block Read Command Code: address 40h, size 8 bytes
Fixed Block 1	F3h	Fixed Block Read Command Code: address 48h, size 8 bytes
Fixed Block 2	F4h	Fixed Block Read Command Code: address 50h, size 6 bytes
Fixed Block 3	F5h	Fixed Block Read Command Code: address 56h, size 16 bytes
Fixed Block 4	F6h	Fixed Block Read Command Code: address 67h, size 4 bytes
Fixed Block 5	F7h	Fixed Block Read Command Code: address 6Eh, size 8 bytes
Fixed Block 6	F8h	Fixed Block Read Command Code: address 78h, size 12 bytes
Fixed Block 7	F9h	Fixed Block Read Command Code: address 90h, size 32 bytes
Fixed Block 8	FAh	Fixed Block Read Command Code: address B4h, size 8 bytes
Fixed Block 9	FBh	Fixed Block Read Command Code: address C8h, size 8 bytes
Fixed Block 10	FCh	Fixed Block Read Command Code: address D00h, size 16 bytes
Fixed Block 11	FDh	Fixed Block Read Command Code: address E5h, size 9 bytes

Write Operations

The LM96194 supports the following SMBus write protocols.

Write Byte

In this operation the master device sends an address byte and one data byte to the slave device, as follows:

1. The master device asserts a START condition.
2. The master sends the 7-bit slave address followed by the write bit (low).
3. The addressed slave device asserts ACK.
4. The master sends a command code (register address).
5. The slave asserts ACK.
6. The master sends the data byte.
7. The slave asserts ACK.
8. The master asserts a STOP condition to end the transaction.

1	2		3	4	5	6	7	8
S	Slave Address	W	A	Register Address	A	Data Byte	A	P

Write Word

In this operation the master device sends an address byte and two data bytes to the slave device, as follows:

1. The master device asserts a START condition.
2. The master sends the 7-bit slave address followed by the write bit (low).

Copyright © 2007–2013, Texas Instruments Incorporated

3. The addressed slave device asserts ACK.
4. The master sends a command code (register address).
5. The slave asserts ACK.
6. The master sends the low data byte.
7. The slave asserts ACK.
8. The master sends the high data byte.
9. The slave asserts ACK.
10. The master asserts a STOP condition to end the transaction.

1	2		3	4	5	6	7	8	9	10
S	Slave Address	W	A	Register Address	A	Data Byte Low	A	Data Byte High	A	P

SMBus Write Block to Any Address

The start address for a block write is embedded in this transaction. In this operation the master sends a block of data to the slave as follows:

1. The master device asserts a START condition.
2. The master sends the 7-bit slave address followed by the write bit (low).
3. The addressed slave device asserts ACK.
4. The master sends a command code that tells the slave device to expect a block write. The LM96194 command code for a block write is F0h.
5. The slave asserts ACK.
6. The master sends a byte that tells the slave device how many data bytes it will send (N). The SMBus specification allows a maximum of 32 data bytes to be sent in a block write.
7. The slave asserts ACK.
8. The master sends data byte 1, the starting address of the block write.
9. The slave asserts ACK after each data byte.
10. The master sends data byte 2.
11. The slave asserts ACK.
12. The master continues to send data bytes and the slave asserts ACK for each byte.
13. The master asserts a STOP condition to end the transaction.

1	2		3	4	5	6	7	8	9	10	11	…	12		13
S	Slave Address	W	A	Command F0h (Block Write)	A	Byte Count (N)	A	Data Byte 1 (Start Address)	A	Data Byte 2	A	…	Data Byte N	A	P

Special Notes

1. Any attempts to write to bytes beyond normal address space are acknowledged by the LM96194 but are ignored.
2. Block writes do not wrap from address FFh back to 00h the address remains at FFh.
3. The Byte Count field is ignored by the LM96194. The master device may send more or less bytes and the LM96194 accepts them.
4. The SMBus specification requires that block writes never exceed 32 data bytes. Meeting this requirement means that only 31 actual data bytes can be sent (the register address counts as one byte). The LM96194 does not care if this requirement is met.

I²C Block Write™

In this transaction the master sends a block of data to the LM96194 as follows:

1. The master device asserts a START condition.
2. The master sends the 7-bit slave address followed by the write bit (low).
3. The addressed slave device asserts ACK.

4. The master sends the starting address of the block write.
5. The slave asserts ACK after each data byte.
6. The master sends data byte 1.
7. The slave asserts ACK.
8. The master continues to send data bytes and the slave asserts ACK for each byte.
9. The master asserts a STOP condition to end the transaction

1	2		3	4	5	6	7		8		9
S	Slave Address	W	A	Register Address	A	Data Byte 1	A	…	Data Byte N	A	P

Special Notes:

1. Any attempts to write to bytes beyond normal address space are acknowledged by the LM96194 but are ignored.
2. Block writes do not wrap from address FFh back to 00h the address remains at FFh.

Read Operations

The LM96194 uses the following SMBus read protocols.

Read Byte

In the LM96194, the read byte protocol is used to read a single byte of data from a register. In this operation the master device receives a single byte from a slave device, as follows:

1. The master device asserts a START condition.
2. The master sends the 7-bit slave address followed by the write bit (low).
3. The addressed slave device asserts ACK.
4. The master sends a register address.
5. The slave asserts an ACK.
6. The master sends a Repeated START.
7. The master sends the slave address followed by the read bit (high).
8. The slave asserts an ACK.
9. The master receives a data byte and asserts a NACK.
10. The master asserts a STOP condition and the transaction ends.

1	2		3	4	5	6	7		8	9		10
S	Slave Address	W	A	Register Address	A	S	Slave Address	R	A	Data Byte	/A	P

Read Word

In the LM96194, the read word protocol is used to read two bytes of data from a register or two consecutive registers. In this operation the master device reads two bytes from a slave device, as follows:

1. The master device asserts a START condition.
2. The master sends the 7-bit slave address followed by the write bit (low).
3. The addressed slave device asserts ACK.
4. The master sends a register address.
5. The slave asserts an ACK.
6. The master sends a Repeated START.
7. The master sends the slave address followed by the read bit (high).
8. The slave asserts an ACK.
9. The master receives the Low data byte and asserts an ACK.
10. The master receives the High data byte and asserts a NACK.
11. The master asserts a STOP condition and the transaction ends.

Copyright © 2007–2013, Texas Instruments Incorporated

1	2		3	4	5	6	7		8	9		10		11
S	Slave Address	W	A	Register Address	A	S	Slave Address	R	A	Data Byte Low	A	Data Byte High	/A	P

SMBus Block-Write Block-Read Process Call

This transaction is used to read a block of data from the LM96194. Below is the sequence of events that occur in this transaction:

1. The master device asserts a START condition.
2. The master sends the 7-bit slave address followed by the write bit (low).
3. The addressed slave device asserts ACK.
4. The master sends a command code that tells the slave device to expect a block read (F1h) and the slave asserts ACK.
5. The master sends the Byte Count for this write which is 2 and the slave asserts ACK.
6. The master sends the Start Register Address for the block read and the slave asserts the ACK.
7. The master sends the Byte Count (1-32) for the block read processes call and the slave asserts ACK.
8. The master asserts a repeat START condition.
9. The master sends the 7-bit slave address followed by the read bit (high).
10. The slave asserts ACK.
11. The master receives a byte count data byte that tells it how many data bytes will received. This field reflects the number of bytes requested by the Byte Count transmitted to the LM96194. The SMBus specification allows a maximum of 32 data bytes to be received in a block read. Then master asserts ACK.
12. The master receives byte 1 and then asserts ACK.
13. The master receives byte 2 and then asserts ACK.
14. The master receives N-3 data bytes, and asserts ACK for each one.
15. The master receives data byte N and asserts a NACK.
16. The master asserts a STOP condition to end the transaction.

1	2		3	4		5		6		7		8	9		10	…
S	Slave Address	W	A	Block Read Command Code (F1h)	A	Byte Count (2h)	A	Start Register Address	A	Byte Count (1–20h) (N)	A	S	Slave Address	R	A	

	11		12		13		14	15	15	16
…	Byte Count (1–20h) (N)	A	Data Byte 1	A	Data Byte 2	A	…	Data Byte N	/A	P

Special Notes:

1. The LM96194 returns 00h when address locations outside of normal address space are read.
2. Block reads do not wrap around from address FFh to 00h
3. If the master acknowledges more bytes that it requested, the LM96194 continues to supply data until the master does not acknowledge a byte.
4. If the master does not acknowledges a byte to prematurely abort a block read, the LM96194 gets off the bus to allow the master to issue a STOP signal.

Simulated SMBus Block-Write Block-Read Process Call

Alternatively, if the master cannot support an SMBus Block-Write Block-Read process call, it can be emulated by two transactions (a block write followed by a block read). This should only be done in a single master system, since in a dual master system collisions can occur that corrupt the data and transaction. Below is the sequence of events for these transactions:

1. The master issues a START to start this transaction.
2. The master sends the 7-bit slave address followed by a write bit (low).

3. The slave asserts the ACK.
4. The master sends the Block Read command code (F1h) and the slave asserts the ACK.
5. The master sends the Byte Count (2h) for this transaction and the slave asserts the ACK.
6. The master sends the Start Register Address and the slave asserts the ACK.
7. The master sends the Byte Count (1-20h) for the Block-Read Process Call and the slave asserts the ACK.
8. The master sends a STOP to end this transaction.
9. The master sends a START to start this transaction.
10. The master sends the 7-bit slave address followed by a write bit (low) and the slave asserts the ACK.
11. The master sends the Block Read Command code (F1h) and the slave asserts the ACK.
12. The master sends a repeat START.
13. The master sends the 7-bit slave address followed by a read bit (high) and the slave asserts the ACK.
14. The master receives Byte Count (this matches the size sent by the master in step 7) and asserts the ACK.
15. The master receives Data Byte 1 and asserts the ACK.
16. The master receives Data Byte 2 and asserts the ACK.
17. The master receives N-3 data bytes, and asserts ACK for each one.
18. The master receives the last data byte and asserts a NACK.
19. The master issues a STOP to end this transaction.

1	2		3	4		5		6		7		8	9	10			…
S	Slave Address	W	A	Block Read Command Code (F1h)	A	Byte Count (2h)	A	Start Register Address	A	Byte Count (1–20h) (N)	A	P	S	Slave Address	W	A	

	11		12	13				14		15		16			17		16
…	Block Read Command Code (F1h)	A	S	Slave Address	R	A		Byte Count (1–20h) (N)	A	Data Byte 1	A	Data Byte 2	A	…	Data Byte N	/A	P

Special Notes:

1. Steps 9 through 19 can be repeated to read another block of data. The address auto-increments such that the next block starts where the last block left off. The size returned by the LM96194 is the same each time.
2. The LM96194 returns 00h when address locations outside of normal address space are read.
3. Block reads do not wrap around from address FFh to 00h
4. If the master acknowledges more bytes that it requested, the LM96194 continues to supply data until the master does not acknowledge a byte.
5. If the master does not acknowledges a byte to prematurely abort a block read, the LM96194 gets off the bus to allow the master to issue a STOP signal.
6. After a block read is finished, the base address of the LM96194 is updated to point to the byte just beyond the last byte read.

SMBus Fixed Address Block Reads

Block reads can be performed from pre-defined addresses. A special command code has been reserved for each pre-defined address. See the Block Command Code Summary for more details on the command codes. Below is the sequence of events that occur for this type of block read:

1. The master sends a START to start this transaction.
2. The master sends the 7-bit slave address followed by a write bit (low).
3. The slave asserts an ACK.
4. The master sends a Fixed Block Command Code (F2h-FDh) and the slave asserts an ACK.
5. The master sends a repeated START.

Copyright © 2007–2013, Texas Instruments Incorporated

6. The master sends the 7-bit slave address followed by a read bit (high).
7. The slave asserts an ACK.
8. The master receives the Byte Count (depends on the Fixed Block Command Code used) and asserts an ACK.
9. The master receives the first data byte and asserts an ACK.
10. The master continues to receive data bytes and asserting an ACK.
11. The master receives the last data byte.
12. The master asserts a NACK.
13. The master issues a STOP to end this transaction.

1	2		3	4		5	6		7	8		9		10	11	12	13
S	Slave Address	W	A	Fixed Block Command Code (F2h–FDh)	A	S	Slave Address	R	A	Byte Count (N)	A	Data Byte 1	A	…	Data Byte N	/A	P

Special Notes:

1. The LM96194 returns 00h when address locations outside of normal address space are read.
2. Block reads do not wrap around from address FFh to 00h.
3. If the master acknowledges more bytes that it requested, the LM96194 continues to supply data until the master does not acknowledge a byte.
4. If the master does not acknowledges a byte to prematurely abort a block read, the LM96194 gets off the bus to allow the master to issue a STOP signal.

I^2C Block Reads

The LM96194 supports I^2C block reads. The following sequence of events occur in this transaction:

1. The master sends a START to start this transaction .
2. The master send 7-bit slave address followed by a write bit (low).
3. The slave asserts an ACK.
4. The master sends the register address and the slave asserts an ACK.
5. The master sends a repeated START.
6. The master sends the 7-bit slave address followed by a read bit (high).
7. The slave asserts an ACK.
8. The master receives Data Byte 1 and asserts an ACK.
9. The master continues to receive bytes and asserting an ACK for each byte received.
10. The master receives the last byte.
11. The master asserts a NACK.
12. The master issues a STOP.

1	2		3	4		5	6		7	8		9		…	10	11	12
S	Slave Address	W	A	Register Address	A	S	Slave Address	R	A	Data Byte 1	A	Data Byte 2	A	…	Data Byte N	/A	P

Special Notes:

1. The LM96194 returns 00h when address locations outside of normal address space are read.
2. Block reads do not wrap around from address FFh to 00h.
3. If the master acknowledges more bytes that it requested, the LM96194 continues to supply data until the master does not acknowledge a byte.
4. If the master does not acknowledges a byte to prematurely abort a block read, the LM96194 gets off the bus to allow the master to issue a STOP signal.

Copyright © 2007–2013, Texas Instruments Incorporated

READING AND WRITING 16-BIT REGISTERS

Whenever the low byte of a 16-bit register is read, the high byte is frozen. After the high byte is read, it is unfrozen. This ensures that the entire 16-bit value is read properly and the high byte matches with the low byte. If the low byte of a different 16-bit register is read, the currently frozen high byte is unfrozen and the high byte of the new 16-bit register is frozen. In a system with two SMBus masters, it is very important that only one master reads any 16-bit registers at a time. One possible method to achieve this would involve using 16-bit SMBus reads (instead of two separate 8-bit reads) to read 16-bit registers.

Whenever the low byte of a 16-bit register is written, the write is buffered and does not take effect until the corresponding high byte is written. If the low byte of a different 16-bit register is written, the previously buffered low byte of the first register is discarded. If a device attempts to write the high byte of a 16-bit register, and the corresponding low byte was not written (or was discarded), then the LM96194 will NACK the byte.

Using The LM96194

POWER ON

The LM96194 generates a power on reset signal on $\overline{\text{RESET}}$ when power is applied for the first time to the part.

RESETS

Upon power up, the $\overline{\text{RESET}}$ output is asserted when the voltage on the power supply crosses the power-on-reset threshold level (see Electrical Specifications). The $\overline{\text{RESET}}$ output is open-drain and should be used with an external pull-up resistor connected to V_{DD}. Once the power on reset has completed, the $\overline{\text{RESET}}$ pin becomes an input and 10 µs after assertion of $\overline{\text{RESET}}$ the LOCK bit in the LM96194 Configuration register shall be cleared. In addition, 10 µs after assertion of $\overline{\text{RESET}}$ the sleep control register shall be automatically set to S4/S5. This causes several error events to be masked according to the S4/S5 masking definitions. Since the $\overline{\text{RESET}}$ pin becomes an active input, it must not be left floating at any time as this may cause the LM96194 to drift into S4/S5 and thus have unpredictable behavior. $\overline{\text{RESET}}$ must be asserted for more than 4µs in order to ensure detection.

Register Types	Power On Reset	External Reset
Factory regs	x	
BMC Error Status regs	x	
Host Error Status regs	x	
Value regs		
Limit regs	x	
Setup regs	x	
LM96194 Configuration Lock Bit	x	x
LM96194 Configuration GMSK Bit	x (reset)	
Sleep Mask	x	
Sleep State Control		x
Other Mask regs	x	

All other registers are not effected by power on reset or external reset.

ADDRESS SELECTION

LM96194 is designed to be used primarily in dual processor server systems that may require only one monitoring device.

If multiple LM96194 devices are implemented in a system, they must have unique SMBus slave addresses. See the SMBus ADDRESSING for more information.

The board designer may apply a 10 kΩ pull-down and/or pull-up resistors to ground and/or to 3.3V SB V_{DD} on the ADDR_SEL pin. The LM96194 is designed to work with resistors of 5% tolerance for the case where two resistors are required. Upon the first SMBus communication to the part, the LM96194 assigns itself an SMBus address according to the ADDR_SEL input.

Copyright © 2007–2013, Texas Instruments Incorporated

Address Select	Board Implementation	SMBus Address
less-than 10% of V_{DD}	Pulled to ground through a 10 kΩ resistor	0101 100b
≈ $V_{DD}/2$	10 kΩ (5%) Resistor to 3.3V SB V_{DD} and to Ground	0101 110b
greater-than 90% of V_{DD}	Pulled to 3.3V SB V_{DD} through a 10 kΩ resistor	0101 101b

DEVICE SETUP

BIOS executes the following steps to configure the registers in the LM96194. All steps may not be necessary if default values are acceptable.

Set limits and parameters (not necessarily in this order):

- Set up Fan control
- Set up PWM temperature bindings
- Set fan tach limits
- Set fan boost temperature and hysteresis
- Set the VRD_HOT and PROCHOT PWM ramp control rate
- Enable Smart Tach Mode and Tachometer Input to PWM binding (required with PWM drive of fan ground or power pins)
- Set the temperature absolute limits
- Set the temperature hysteresis values
- Set temperature filtered or unfiltered usage
- Set the Zone Adjustment Offset temperature
- Set the PROCHOT override and time interval values
- Set the PROCHOT user limit
- Enable THERMTRIP masking of error events (if GPIO4 is used as THERMTRIP input)
- Set voltage sensor limits and hysteresis
- Set the Dynamic Vccp offset limits
- Set the Sleep State control and mask registers
- Set Other Mask Registers (GPI Error, VRD_HOT, and Dynamic Vccp limit checking)
- Set start bit to select user values and unmask error events
- Set the sleep state to 0
- Set Lock bit to lock the limit and parameter registers (optional)

ROUND ROBIN VOLTAGE/TEMPERATURE CONVERSION CYCLE

The LM96194 monitoring function is started as soon as the part is powered up. The LM96194 performs a “round robin” sampling of the inputs, in the order shown below. Each cycle of the round robin is completed in less than 100 ms.

The results of the sampling and conversions can be found in the value registers and are available at any time.

Channel #	Input	Typical Assignment
3	Temp Zone 3	Internal Temperature Reading
1	Temp Zone 1a	Remote Diode 1a Temp Reading
	Temp Zone 1b	Remote Diode 1b Temp Reading (if selected)
2	Temp Zone 2a	Remote Diode 2a Temp Reading
	Temp Zone 2b	Remote Diode 2b Temp Reading (if selected)
4	AIN1	+12V1 (if selected)
5	AIN2	+12V2 (if selected)
6	AIN3	+12V3
10	AIN4	CPU_1Vccp

Copyright © 2007–2013, Texas Instruments Incorporated

Channel #	Input	Typical Assignment
12	AIN5	3.3V
16	AIN6	Mem_Vtt
17	AIN7	GBIT_Core
18	AIN8	−12V
19	AIN9	3.3V SB V_{DD} Supply Rail

ERROR STATUS REGISTERS

The LM96194 contains several error status registers for the BMC side, and duplicated error status registers for the Host side. These registers are used to reflect the state of all the possible error conditions that the LM96194 monitors.

The BMC/Host Error Status registers hold a set bit until the event is cleared by software, even if the condition causing the error event goes away.

To clear a bit in the Error Status registers, a ‘1’ has to be written to the specific bit that is required to be cleared. If the event that caused the error is no longer active then the bit is cleared.

Clearing a bit in a BMC Error Status register does not clear the corresponding bit in the Host Error Status register or vise versa.

ASF Mode

Error Status registers function allow the LM96194 to act as a legacy sensor (6.1.2 of ASF spec DSP0114 rev 2) and to easily connect to the SMBus of an ASF capable NIC chip.

The LM96194 can be placed into ASF mode by setting the appropriate bit in the LM96194 Status/Control register. Once this bit is set, the BMC Error Status registers become read-to-clear. Writing a ‘1’ to clear a particular bit is also allowed in ASF mode. The Host Error Status registers are not effected by ASF mode.

MASKING, ERROR STATUS AND $\overline{\text{ALERT}}$

Masking is always applied to bits in the HOST and BMC Error Status registers. If an event is masked, the corresponding error bit in the HOST or BMC Error Status registers is prevented from ever being set. As a result, this prevents the event from ever causing $\overline{\text{ALERT}}$ to be asserted. Masking an event does not clear its associated Error Status bit if it is currently set.

Voltage errors are masked by writing a high voltage limit value of FFh. This is the default high limit for all voltages.

Temperature errors are masked by writing a high temperature limit value of 80h. This is the default high limit for all temperatures. Masking a temperature channel masks both temperature errors and diode fault errors.

The GPI Mask register allows GPI errors to be masked. Any bits that are set in this register mask events for the corresponding GPIO_x pin.

User $\overline{\text{PROCHOT}}$ status is not really an error but it can be used to notify the user of processor throttling past a preset USER limit. A user limit of FFh acts as the mask for this register. Error bits associated with the predefined $\overline{\text{PROCHOT}}$ thresholds cannot be masked. It is important to note though, that these error bits do not cause BMC_ERR, HOST_ERR, or $\overline{\text{ALERT}}$ to be asserted under any condition.

Fan tach errors are masked if the tach limit for the given tach is set to FFh .

$\overline{\text{GPI}}$ errors and $\overline{\text{VRD_HOT}}$ errors can be masked by setting the appropriate bit in the GPI and Miscellaneous Error Mask registers.

When the LM96194 powers up, the $\overline{\text{ALERT}}$ output is disabled. The $\overline{\text{ALERT}}$ output can be enabled by setting the ALERT_EN bit in the LM96194 Configuration register.

In addition the manual masking options, the LM96194 also masks some errors depending on the sleep state of the system. The sleep state of the system is communicated to the LM96194 by writing to the Sleep State Control register. Some types of error events are always masked in certain sleep modes. Some types of error events are optionally masked in certain sleep modes if their sleep mask register bit is set. Refer to the register descriptions for more information.

 Copyright © 2007–2013, Texas Instruments Incorporated

LAYOUT AND GROUNDING

Analog components such as voltage dividers should be physically located as close as possible to the LM96194. See PCB Layout for Minimizing Noise for thermal diode layout recommendations.

The LM96194 bypass capacitors, the parallel combination of 100 pF, 10 µF (electrolytic or tantalum) and 0.1 µF (ceramic) bypass capacitors must be connected between power pin (pin 39) and ground, and should be located as close as possible to the LM96194. The 100 pF capacitor should be placed closest to the power pin.

THERMAL DIODE APPLICATION

To measure temperature external to the LM96194, use a remote discrete diode to sense the temperature of external objects or ambient air. The temperature of a discrete diode is affected, and often dominated, by the temperature of its leads.

Most silicon diodes do not lend themselves well to this application. It is recommended that a MMBT3904 transistor type base emitter junction be used with the collector tied to the base.

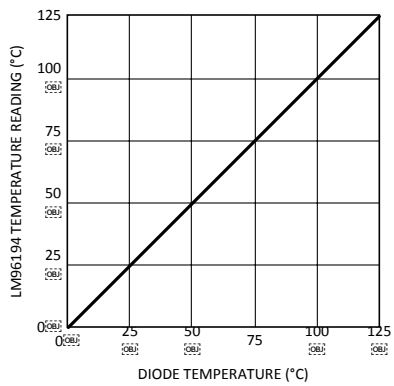

Figure 8. Thermal Diode Temperature vs LM96194 Temperature Reading

DIODE NON-IDEALITY

Diode Non-Ideality Factor Effect on Accuracy

When a transistor is connected as a diode, the following relationship holds for variables V_{BE}, T and I_F:

$$I_F = I_S \times \left[e^{\left(\frac{V_{BE}}{\eta \times V_t}\right)} - 1 \right] \tag{8}$$

where:

$$V_t = \frac{k\,T}{q} \tag{9}$$

- $q = 1.6\times10^{-19}$ Coulombs (the electron charge),
- T = Absolute Temperature in Kelvin
- $k = 1.38\times10^{-23}$joules/K (Boltzmann's constant),
- η is the non-ideality factor of the process the diode is manufactured on,
- I_S = Saturation Current and is process dependent,
- I_f= Forward Current through the base emitter junction
- V_{BE} = Base Emitter Voltage drop

In the active region, the -1 term is negligible and may be eliminated, yielding the following equation

$$I_F = I_S \left[e^{\frac{V_{be}}{\eta V_t}} \right] \tag{10}$$

In Equation 10, η and I_S are dependant upon the process that was used in the fabrication of the particular diode. By forcing two currents with a well controlled ratio(I_{F2}/I_{F1}) and measuring the resulting voltage difference, it is possible to eliminate the I_S term. Solving for the forward voltage difference yields the relationship:

$$\Delta V_{BE} = \eta \times \frac{K \times T}{q} \times \ln\left(\frac{I_{F2}}{I_{F1}}\right) \tag{11}$$

Solving Equation 11 for temperature yields:

$$T = \frac{\Delta V_{BE} \times q}{\eta \times k \times \ln\left(\frac{I_{F2}}{I_{F1}}\right)} \tag{12}$$

Equation 12 holds true when a diode connected transistor such as the MMBT3904 is used. When this "diode" equation is applied to an integrated diode such as a processor transistor with its collector tied to GND as shown in Figure 9 it will yield a wide non-ideality spread. This wide non-ideality spread is not due to true process variation but due to the fact that Equation 12 is an approximation.

TruTherm technology uses the transistor equation, Equation 13, which is a more accurate representation of the topology of the thermal diode found in an FPGA or processor.

$$T = \frac{\Delta V_{BE} \times q}{\eta \times k \times \ln\left(\frac{I_{C2}}{I_{C1}}\right)} \tag{13}$$

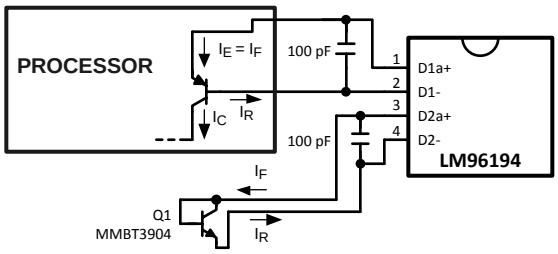

Figure 9. Thermal Diode Current Paths

TruTherm should only be enabled when measuring the temperature of a transistor integrated as shown in the processor of Figure 9, because Equation 13 only applies to this topology.

Calculating Total System Accuracy

The voltage seen by the LM96194 also includes the $I_F R_S$ voltage drop of the series resistance. The non-ideality factor, η, is the only other parameter not accounted for and depends on the diode that is used for measurement. Since ΔV_{BE} is proportional to both η and T, the variations in η cannot be distinguished from variations in temperature. Since the non-ideality factor is not controlled by the temperature sensor, it will directly add to the inaccuracy of the sensor. For the Pentium™ D processor on 65nm process, Intel specifies a +4.06%/−0.89% variation in η from part to part when the processor diode is measured by a circuit that assumes diode equation, Equation 12, as true. As an example, assume a temperature sensor has an accuracy specification of ±2.5°C at a temperature of 75 °C (348 Kelvin) and the processor diode has a non-ideality variation of +4.06%/−0.89%. The resulting system accuracy of the processor temperature being sensed will be:

$$T_{ACC} = \pm 2.5°C + (+4.06\% \text{ of } 348 \text{ K}) = +16.6\ °C \tag{14}$$

and

$$T_{ACC} = \pm 2.5°C + (-0.89\% \text{ of } 348 \text{ K}) = -5.6\ °C \tag{15}$$

TruTherm technology uses the transistor equation, Equation 13, resulting in a non-ideality spread that truly reflects the process variation which is very small. The transistor equation non-ideality spread is ±0.4% for the Pentium D processor on 65nm process. The resulting accuracy when using TruTherm technology improves to:

$$T_{ACC} = \pm 2.5°C + (\pm 0.4\% \text{ of } 348 \text{ K}) = \pm 3.9\ °C \tag{16}$$

Copyright © 2007–2013, Texas Instruments Incorporated

The next error term to be discussed is that due to the series resistance of the thermal diode and printed circuit board traces. The thermal diode series resistance is specified on most processor data sheets. For the Pentium D processor on 65 nm process, this is specified at 4.52Ω typical. The LM96194 accommodates the typical series resistance of the Pentium D processor on 90 nm process. The error that is not accounted for is the spread of the Pentium's series resistance, that is 2.79Ω to 6.24Ω or ±1.73Ω. The equation to calculate the temperature error due to series resistance (T_{ER}) for the LM96194 is simply:

$$T_{ER} = R_{PCB} \times 0.62℃/\Omega \tag{17}$$

Solving Equation 17 for R_{PCB} equal to ±1.73Ω results in the additional error due to the spread in the series resistance of ±1.07°C. The spread in error cannot be canceled out, as it would require measuring each individual thermal diode device. This is quite difficult and impractical in a large volume production environment.

Equation 17 can also be used to calculate the additional error caused by series resistance on the printed circuit board. Since the variation of the PCB series resistance is minimal, the bulk of the error term is always positive and can simply be cancelled out by subtracting it from the output readings of the LM96194.

Compensating for Different Non-Ideality

In order to compensate for the errors introduced by non-ideality, the temperature sensor is calibrated for a particular processor. Texas Instruments temperature sensors are always calibrated to the typical non-ideality and series resistance of a given processor type. The LM96194 is calibrated for two non-ideality factors and series resistance values thus supporting the MMBT3904 transistor and the Pentium D processor on 65nm process without the requirement for additional trims. For most accurate measurements TruTherm mode should be turned on when measuring the Pentium D processor on the 65nm process the error introduced by the false non-ideality spread (see Diode Non-Ideality Factor Effect on Accuracy). When a temperature sensor calibrated for a particular processor type is used with a different processor type, additional errors are introduced.

Temperature errors associated with non-ideality of different processor types may be reduced in a specific temperature range of concern through use of software calibration. Typical non-ideality specification differences cause a gain variation of the transfer function, therefore the center of the temperature range of interest should be the target temperature for calibration purposes. The following equation can be used to calculate the temperature correction factor (T_{CF}) required to compensate for a target non-ideality differing from that supported by the LM96194.

$$T_{CF} = [(\eta_S - \eta_{Processor}) \div \eta_S] \times (T_{CR} + 273\ K) \tag{18}$$

where

- η_S = LM96194 non-ideality for accuracy specification
- η_T = target thermal diode typical non-ideality
- T_{CR} = center of the temperature range of interest in °C

The correction factor of Equation 18 should be directly added to the temperature reading produced by the LM96194. For example when using the LM96194, with the 3904 mode selected, to measure a AMD Athlon processor, with a typical non-ideality of 1.008, for a temperature range of 60 °C to 100 °C the correction factor would calculate to:

$$T_{CF} = [(1.003 - 1.008) \div 1.003] \times (80 + 273) = -1.75°C \tag{19}$$

Therefore, 1.75°C should be subtracted from the temperature readings of the LM96194 to compensate for the differing typical non-ideality target.

PCB Layout for Minimizing Noise

In the following guidelines, Remote+ and Remote -− refer to the REMOTE1a+, Remote 1b+, REMOTE1−, REMOTE2a+, Remote2b+ and REMOTE2− pins.

In a noisy environment, such as a power supply, layout considerations are very critical. Noise induced on traces running between the remote temperature diode sensor and the LM96194 can cause temperature conversion errors.

The following guidelines should be followed:

1. Place a 0.1 µF and 100 pF LM96194 power bypass capacitors as close as possible to the V_{DD} pin, with the 100pF capacitor being the closest. Place 10 µF capacitor in the near vicinity of the LM96194 power pin.

2. Place a 100 pF capacitor as close as possible to the LM96194 thermal diode Remote+ and Remote− pins. Make sure the traces to the 100 pF capacitor are matched and as short as possible. This capacitor is required to minimize high frequency noise error.
3. Thermal diodes that share one Remote− pin must have a separate trace from the LM96194 Remote− pin run to each diode cathode. Do not "daisy chain" these connections.
4. Ideally, the LM96194 should be placed within 10 cm of the thermal diode pins with the traces being as straight, short and identical as possible. Trace resistance of 1Ω can cause as much as 1°C of error.
5. Diode traces should be surrounded by a GND guard ring to either side, above and below, if possible. This GND guard should not be between the Remote+ and Remote− lines. In the event that noise does couple to the diode lines, it would be ideal if it is coupled to both identically, i.e. common mode. That is, equally to the Remote+ (D+) and Remote−(D-) lines. (See figure below):

Figure 10. Recommended Diode Trace Layout

6. Avoid routing diode traces in close proximity to any power supply switching or filtering inductors.
7. Avoid running diode traces close to or parallel to high speed digital and bus lines. Diode traces should be kept at least 2 cm apart from the high speed digital traces.
8. If it is necessary to cross high speed digital traces, the diode traces and the high speed digital traces should cross at a 90 degree angle.
9. The ideal place to connect the LM96194's GND pin is as close as possible to the Processors GND associated with the sense diode. In the case of two processors pick a node in between the two that has the least noise.
10. Leakage current between Remote+ and GND should be kept to a minimum. Error in the diode temperature reading may reach 0.4°C with 30 nA of leakage current. Keeping the printed circuit board as clean as possible minimizes leakage current. The residue from some freeze spray can induce high leakage current.

FAN CONTROL

Automatic Fan Control Methods

The LM96194 fan speed control method is optimized for fan noise reduction, fan power efficiency, fan reliability and minimum cost. The PWMx outputs can be filtered using an external switching regulator type output stage that provides 5V to 12V DC for fan power. A high PWM frequency is required to minimize the size and cost of the inductor and other components used in the output stage. The PWM outputs of the LM96194 can operate up to 22.5 kHz with a variable step size depending on the fan control mode of operation. The LM96194 supports LUT (Lookup Table) and PI (Proportional Integral) fan control methods. These methods can function interactively or independently as controlled by the PWM binding registers. Figure 11 shows the high level block diagram for these fan control methods. The mapping/binding of the temperature zones to the LUTs is completely independent of the PI loops. The temperature zones can be first independently bound to the LUTs and/or PI loops then each LUT or PI loop can be bound to either PWM Output. The LUT parameters are independent of the temperature zone binding. The PI loop controller is a proportional-integral feedback controller. It generates a 9-bit PWM duty cycle and uses temperature feedback from the processor thermal zones (Zones 1 and 2). The PWM output controls the airflow over the processors and thus the temperature of the processors is adjusted by the PI loop to maintain the hottest temperature reading between the values Tcontrol and Tcontrol - hysteresis. The LM96194 supports 2 processors and each processor can have two thermal sub-zones. The hottest of each processor temperature is reported to the Zone selectors and PI loop inputs. Each processor has an independent Tcontrol setting.

 Copyright © 2007–2013, Texas Instruments Incorporated

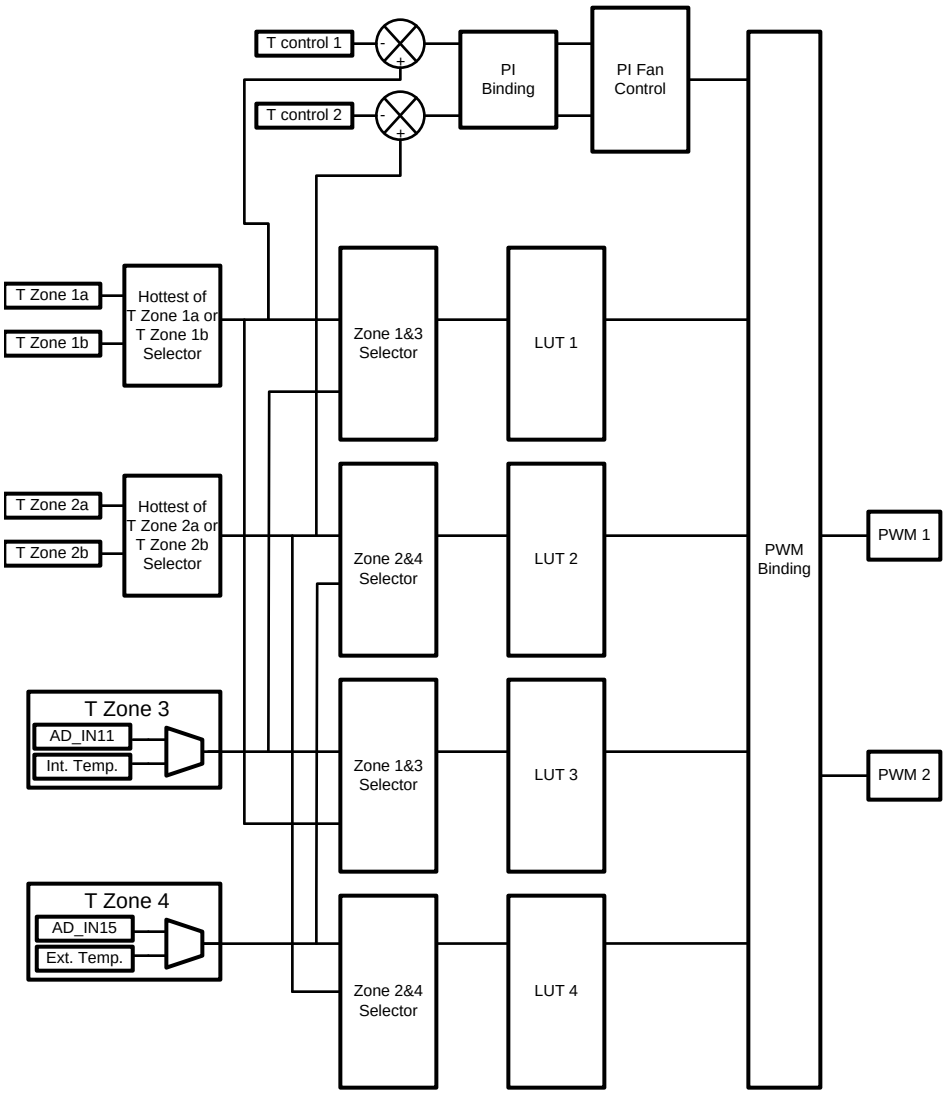

Figure 11. LUT and PI controller high level block diagram

Alternate LUT PWM Mapping

The PWM output can operate at lower frequencies, instead of the default 22.5 kHz. The lower frequencies can be enabled through the PWMx Control 4 registers. Operating in the lower frequency mode, enables an alternate mapping of step numbers to duty cycle. This effects the auto fan control and all LM96194 registers that describe a duty cycle using a 4-bit value. This alternate mapping can also be enable when using the default 22.5 kHz PWM frequency.

The alternate LUT PWM duty cycle mapping is listed in the following table:

4-Bit Value	LUT Step	Alternate LUT Duty Cycle
0h		0%
1h	1	25.00%
2h	2	28.57%
3h	3	32.14%
4h	4	35.71%
5h	5	39.29%

4-Bit Value	LUT Step	Alternate LUT Duty Cycle
6h	6	42.86%
7h	7	46.43%
8h	8	50.00%
9h	9	53.57%
Ah	10	57.14%
Bh	11	71.43%
Ch	12	85.71%
Dh	13	100.00%
Eh	—	Reserved
Fh	—	Reserved

Fan Control Priorities

The automatic fan control is not the only function that influences PWM duty cycle. There are several other functions that influence the PWM duty cycle. All the functions can be classified into several categories:

Category #	Category Name
1	PWM to 100% conditions
2	$\overline{\text{VRD_HOT}}$ ramp-up/ramp-down
3	$\overline{\text{PROCHOT}}$ ramp-up/ramp-down function
4	Manual PWM Override
5	Fan Spin-Up Control
6	Automatic Fan Control Algorithm

The ultimate PWM duty cycle that is chosen can be described by the following formula:

If (Manual PWM Override is active)

PWM = max(1,2,3,4)

Else

PWM = max(1,2,3,5,6)

So in general, categories 1, 2 and 3 are always active. In addition to that, either category 4 or categories 5 and 6 are active depending on whether manual override is enabled. In this sense the manual override, when enabled, replaces category 5 and 6.

PWM to 100% Conditions

There are several conditions that cause the duty cycles of all PWM outputs to immediately get set to 100%. They are:

1. any of the four temperature zones exceed the programmed Fan Boost Limit setting but has not yet cooled down enough to drop below the hysteresis point
2. a tachometer reading exceeds its limit
3. the OVRID bit is set in the LM96194 Status/Control

$\overline{\text{VRD_HOT}}$ Ramp-Up/Ramp-Down

This function causes the duty cycle of the PWM outputs to gradually increase over time if $\overline{\text{VRD_HOT}}$ is asserted.

When $\overline{\text{VRD_HOT}}$ is asserted, the ramp function is enabled. The enabling process involves two steps:

1. The current duty cycle being requested by other PWM functions is memorized.
2. The ramp function immediately adds one PWM duty cycle step to the memorized value and requests this duty cycle.

 Copyright © 2007–2013, Texas Instruments Incorporated

Once the function is enabled, it gradually adds additional duty cycle steps every X milliseconds whenever VRD_HOT is asserted (X is programmable via the PWM Ramp Control register). If VRD_HOT remains asserted for a long enough time, the duty cycle eventually reaches 100%.

Whenever VRD_HOT is de-asserted, the ramp function begins to ramp down by subtracting one PWM duty cycle step every X milliseconds. If VRD_HOT is currently de-asserted, and the ramp function is less than to the PWM duty cycle being requested by other functions, the ramp function is disabled.

As long as the function is enabled, it continues to ramp up or ramp down depending on the state of VRD_HOT. The ramp enabling process described above can only re-occur after the ramp function has been disabled. Rapid assertion/de-assertion of VRD_HOT does not trigger the enabling process unless VRD_HOT was de-asserted long enough for the ramp function to disable itself.

This ramp function only applies to the PWM(s) that are bound to the VRD_HOT inputs. Depending on the bindings, it is possible that up to two independent ramp functions are active at any given moment:

PWM1/VRD

PWM2/VRD

PROCHOT Ramp-Up/Ramp-Down

This function is very similar to the VRD_HOT ramp-up/ramp-down function. The PWM duty cycle ramps up in the same fashion whenever the PROCHOT measurement exceeds the user programmed threshold. Once a new PROCHOT measurement is made that no longer exceeds the user limit, the PWM will begin to ramp down.

Just as with the VRD_HOT ramp function, the PROCHOT ramp function uses independent bindings to determine which PWM outputs should be effected by each PROCHOT input.

Manual PWM Override

When a PWM channel is configured for manual PWM override, software can manually control the PWM duty cycle. There are some PWM control functions that could still cause the duty cycle to be higher than the manual setting. See the Fan Control Priorities for details.

Fan Spin-Up Control

All of the other PWM control functions are combined to produce a final duty cycle that is actually used for the PWM output. If this final value changes from zero to a non-zero value, the Fan Spin-Up Control function is triggered. Once triggered, the Fan Spin-Up Control requests the programmed duty cycle for a programmed period of time.

XOR TREE TEST

An XOR tree is provided in the LM96194 for Automated Test Equipment (ATE) board level connectivity testing. This allows the functionality of all digital inputs to be tested in a simple manner and any pins that are non-functional or shorted together to be identified. When the test mode is enabled by setting the 'XEN' bit in the XOR Test register, the part enters XOR test mode.

Table 3. The following signals are included in the XOR test tree:

VIDx	GPIO_x	PWMx	PROCHOT	VRD_HOT	GPIx	RESET

Since the test mode is XOR tree, the order of the signals in the tree is not important. SMBDAT and SMBCLK should not be included in the test tree.

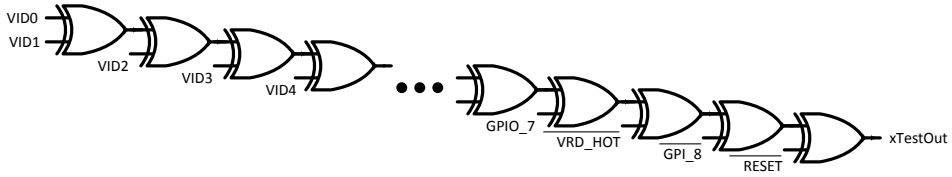

Figure 12. Example of XOR Test Tree (not showing all signals)

To properly implement the XOR TREE test on the PCB, no pins listed in the tree should be connected directly to power or ground. If a pin needs to be configured as a permanent low, such as a GPI, it should be connected to ground through a low value resister such as 10 kΩ, to allow the ATE (Automatic Test Equipment) to drive it high.

When generating test waveforms, a typical propagation delay of 500 ns through the XOR tree should be allowed for.

Registers

REGISTER WARNINGS

In most cases, reserved registers and register bits return zero when read. This should not be relied upon, since reserved registers can be used for future expansion of the LM96194 functions.

Some registers have "N/D" for their default value. This means that the power-up default of the register is not defined. In the case of value registers, care should be taken to ensure that software does not read a value register until the associated measurement function has acquired a measurement. This applies to temperatures, voltages, fan RPM, and $\overline{\text{PROCHOT}}$ monitoring.

REGISTER SUMMARY TABLE

Table 4. Register Key

Term	Description
N/D	Not Defined
N/A	Not Applicable
R	Read Only
R/W	Read or Write
RWC	Read or Write to Clear

Lock	Register Name	Address	Default	Description
FACTORY REGISTERS				
x	XOR Test	00h	00h	Used to set the XOR test tree mode
	SMBus Test	01h	00	SMBus read/write test register
	Reserved	02h-04h	N/D	
"REMOTE DIODE" MODE SELECT				
x	Transistor Mode Select	05h	00h	Selects Diode Mode (default) or Transistor Mode for "Remote Diode" measurements
VALUE REGISTER SECTION 1				
	Zone 1b (CPU Diode b) Temp	06h	00h	Measured value of remote thermal diode temperature channel 1b
	Zone 2b (MMBT3904 Diode b) Temp	07h	00h	Measured value of remote thermal diode temperature channel 2b
	Zone 1b (CPU Diode b) Filtered Temp	08h	00h	Filtered value of remote thermal diode temperature channel 1b
	Zone 2b (MMBT3904 Diode b) Filtered Temp	09h	00h	Filtered value of remote thermal diode temperature channel 2b
	PWM1 8-bit Duty Cycle Value	0Ah	00h	8- bit value of the PWM1 duty cycle.
	PWM2 8-bit Duty Cycle Value	0Bh	00h	8-bit value of the PWM2 duty cycle
HIGH RESOLUTION PWM OVERRIDE REGISTERS				
x	PWM1 Duty Cycle Override (low byte)	0Ch	00h	Lower byte of the high resolution PWM1 duty cycle register
x	PWM1 Duty Cycle Override (high byte)	0Dh	00h	Upper byte of the high resolution PWM1 duty cycle register
x	PWM2 Duty Cycle Override (low byte)	0Eh	00h	Lower byte of the high resolution PWM2 duty cycle register
x	PWM2 Duty Cycle Override (high byte)	0Fh	00h	Upper byte of the high resolution PWM2 duty cycle register

Copyright © 2007–2013, Texas Instruments Incorporated

Lock	Register Name	Address	Default	Description
EXTENDED RESOLUTION TEMPERATURE VALUE REGISTERS				
	Z1a_LSB	10h	00h	Zone 1a (CPU) extended resolution unfiltered temperature value register, least-significant byte
	Z1a_MSB	11h	00h	Zone 1a (CPU) extended resolution unfiltered temperature value register, most-significant byte
	Z1b_LSB	12h	00h	Zone 1b (CPU) extended resolution unfiltered temperature value register, least-significant-byte
	Z1b_MSB	13h	00h	Zone 1b (CPU) extended resolution unfiltered temperature value register, most-significant byte
	Z2a_LSB	14h	00h	Zone 2a (MMBT2904) extended resolution unfiltered temperature value register, least-significant-byte
	Z2a_MSB	15h	00h	Zone 2a (MMBT3904) extended resolution unfiltered temperature value register, most-significant byte
	Z2b_LSB	16h	00h	Zone 2b (MMBT3904) extended resolution unfiltered temperature value register, least-significant-byte
	Z2b_MSB	17h	00h	Zone 2b (MMBT3904) extended resolution unfiltered temperature value register, most-significant byte
	Z1a_F_LSB	18h	00h	Zone 1a (CPU) extended resolution filtered temperature value register, least-significant byte
	Z1a_F_MSB	19h	00h	Zone 1a (CPU) extended resolution filtered temperature value register, most-significant byte
	Z1b_F_LSB	1Ah	00h	Zone 1b (CPU) extended resolution filtered temperature value register, least-significant-byte
	Z1b_F_MSB	1Bh	00h	Zone 1b (CPU) extended resolution filtered temperature value register, most-significant byte
	Z2a_F_LSB	1Ch	00h	Zone 2a (MMBT3904) extended resolution filtered temperature value register, least-significant-byte
	Z2a_F_MSB	1Dh	00h	Zone 2a (MMBT3904) extended resolution filtered temperature value register, most-significant byte
	Z2b_F_LSB	1Eh	00h	Zone 2b (MMBT3904) extended resolution filtered temperature value register, least-significant-byte
	Z2b_F_MSB	1Fh	00h	Zone 2b (MMBT3904) extended resolution filtered temperature value register, most-significant byte
	Z3_LSB	20h	00h	Zone 3 (Internal) extended resolution temperature value register, least-significant byte
	Z3_MSB	21h	00h	Zone 3 (Internal) extended resolution temperature value register, least-significant byte
	Z4_LSB	22h	00h	Zone 4 (External Digital) extended resolution temperature value register, most-significant byte
	Z4_MSB	23h	00h	Zone 4 (External Digital) extended resolution temperature value register, least-significant byte
	Reserved	24h-30h	N/D	
PI LOOP AND FAN CONTROL SETUP REGISTERS				
x	Temperature Source Select	31h	00h	Selects the temperature source for some temperature zones.
x	PWM Filter Settings	32h	00h	Sets the IIR filter coefficients for the PWM outputs for low resolution sources
x	PWM1 Filter Shutoff Threshold	33h	00h	PWM1 Filter Shutoff Threshold
x	PWM2 Filter Shutoff Threshold	34h	00h	PWM2 Filter Shutoff Threshold
x	PI/LUT Fan Control Bindings	35h	30h	PI/LUT fan control binding configuration
x	PI Controller Minimum PWM and Hysteresis	36h	00h	PI Controller Minimum PWM and Hysteresis settings
x	Zone 1 Tcontrol	37h	00h	Zone 1 (CPU) PI Controller Target Temperature (Tcontrol)
x	Zone 2 Tcontrol	38h	00h	Zone 2 (MMBT3904) PI Controller Target Temperature (Tcontrol)
x	Zone 1 Toff	39h	80h	Zone 1 (CPU) PI Controller Off Temperature (Toff)

Copyright © 2007–2013, Texas Instruments Incorporated

Lock	Register Name	Address	Default	Description
x	Zone 2 Toff	3Ah	80h	Zone 2 (MMBT3904) PI Controller Off Temperature (Toff)
x	P Coefficient	3Bh	00h	PI controller proportional coefficient
x	I Coefficient	3Ch	00h	PI controller integral coefficient
x	PI Exponents	3Dh	00h	PI controller coefficient exponents
DEVICE IDENTIFICATION REGISTERS				
	Manufacturer ID	3Eh	01h	Contains manufacturer ID code
	Version/Stepping	3Fh	79h	Contains code for major and minor revisions
BMC ERROR STATUS REGISTERS				
	B_Error Status 1	40h	00h	BMC error status register 1
	B_Error Status 2	41h	00h	BMC error register 2
	B_Error Status 3	42h	00h	BMC error register 3
	B_Error Status 4	43h	00h	BMC error register 4
	B_$\overline{\text{PROCHOT}}$ Error Status	44h	00h	BMC error register for $\overline{\text{PROCHOT}}$
	Reserved	45h	N/D	
	B_GPI Error Status	46h	00h	BMC error register for GPIs
	B_Fan Error Status	47h	00h	BMC error register for Fans
HOST ERROR STATUS REGISTERS				
	H_Error Status 1	48h	00h	HOST error status register 1
	H_Error Status 2	49h	00h	HOST error register 2
	H_Error Status 3	4Ah	00h	HOST error register 3
	H_Error Status 4	4Bh	00h	HOST error register 4
	H_$\overline{\text{PROCHOT}}$ Error Status	4Ch	00h	HOST error register for $\overline{\text{PROCHOT}}$
	Reserved	4Dh	N/D	
	H_GPI Error Status	4Eh	00h	HOST error register for GPIs
	H_Fan Error Status	4Fh	00h	HOST error register for Fans
VALUE REGISTERS SECTION 2				
	Zone 1a (CPU) Temp	50h	00h	Measured value of remote thermal diode temperature channel 1a
	Zone 2a (MMBT3904) Temp	51h	00h	Measured value of remote thermal diode temperature channel 2a
	Zone 3 (Internal) Temp	52h	00h	Measured temperature from on-chip sensor
	Zone 4 (External Digital) Temp	53h	00h	Measured temperature from external temperature sensor
	Zone 1a (CPU) Filtered Temp	54h	00h	Filtered value of remote thermal diode temperature channel 1a
	Zone 2a (MMBT3904) Filtered Temp	55h	00h	Filtered value of remote thermal diode temperature channel 2a
	AD_IN1 Voltage	56h	N/D	Measured value of AD_IN1
	AD_IN2 Voltage	57h	N/D	Measured value of AD_IN2
	AD_IN3 Voltage	58h	N/D	Measured value of AD_IN3
	Reserved	59h-5Bh	N/D	
	AD_IN4 Voltage	5Ch	N/D	Measured value of AD_IN4
	Reserved	5Dh	N/D	
	AD_IN5 Voltage	5Eh	N/D	Measured value of AD_IN5
	Reserved	5Fh-61h	N/D	
	AD_IN6 Voltage	62h	N/D	Measured value of AD_IN6
	AD_IN7 Voltage	63h	N/D	Measured value of AD_IN7
	AD_IN8 Voltage	64h	N/D	Measured value of AD_IN8
	AD_IN9 Voltage	65h	N/D	Measured value of AD_IN9 (V_{DD} 3.3V S/B)
	Reserved	66h	N/D	
	Current $\overline{\text{PROCHOT}}$	67h	00h	Measured $\overline{\text{PPROCHOT}}$ throttle percentage
	Average $\overline{\text{PROCHOT}}$	68h	00h	Average $\overline{\text{PPROCHOT}}$ throttle percentage

Copyright © 2007–2013, Texas Instruments Incorporated

Lock	Register Name	Address	Default	Description
	Reserved	69h-6Ah	N/D	
	GPI State	6Bh	00h	Current GPIO state
	P1_VID	6Ch	00h	Current Processor VID value
	Reserved	6Dh	N/D	
	FAN Tach 1 LSB	6Eh	00h	Measured FAN Tach 1 LSB
	FAN Tach 1 MSB	6Fh	00h	Measured FAN Tach 1 MSB
	FAN Tach 2 LSB	70h	00h	Measured FAN Tach 2 LSB
	FAN Tach 2 MSB	71h	00h	Measured FAN Tach 2 MSB
	FAN Tach 3 LSB	72h	00h	Measured FAN Tach 3 LSB
	FAN Tach 3 MSB	73h	00h	Measured FAN Tach 3 MSB
	FAN Tach 4 LSB	74h	00h	Measured FAN Tach 4 LSB
	FAN Tach 4 MSB	75h	00h	Measured FAN Tach 4 MSB
	Reserved	76h-77h	N/D	
TEMPERATURE LIMIT REGISTERS				
	Zone 1 (CPU) Low Temp	78h	80h	Low limit for external thermal diode temperature channel 1 (D1) measurement
	Zone 1 (CP1) High Temp	79h	80h	High limit for external thermal diode temperature channel 1 (D1) measurement
	Zone 2 (MMBT3904) Low Temp	7Ah	80h	Low limit for external thermal diode temperature channel 2 (D2) measurement
	Zone 2 (MMBT3904) High Temp	7Bh	80h	High limit for external thermal diode temperature channel 2 (D2) measurement
	Zone 3 (Internal) Low Temp	7Ch	80h	Low limit for local temperature measurement
	Zone 3 (Internal) High Temp	7Dh	80h	High limit for local temperature measurement
	Zone 4 (External Digital) Low Temp	7Eh	80h	Low limit for external digital temperature sensor
	Zone 4 (External Digital) High Temp	7Fh	80h	High limit for external digital temperature sensor
x	Fan Boost Temp Zone 1	80h	3Ch	Zone 1 (CPU) fan boost temperature
x	Fan Boost Temp Zone 2	81h	3Ch	Zone 2 (MMBT3904) fan boost temperature
x	Fan Boost Temp Zone 3	82h	23h	Zone 3 (Internal) fan boost temperature
x	Fan Boost Temp Zone 4	83h	23h	Zone 4 (External Digital) fan boost temperature
	Zone1 and Zone 2 Hysteresis	84h	00h	Zone 1 and Zone 2 hysteresis for limit comparisons
	Zone 3 and Zone 4 Hysteresis	85h	00h	Zone 3 and Zone 4 hysteresis for limit comparisons
	Reserved	86h-8Dh	N/D	
ZONE 1b and 2b TEMPERATURE READING ADJUSTMENT REGISTERS				
	Zone 1b Temp Adjust	8Eh	00h	Allows all Zone 1b temperature measurements to be adjusted by a programmable offset.
	Zone 2b Temp Adjust	8Fh	00h	Allows all Zone 2b temperature measurements to be adjusted by a programmable offset.

Copyright © 2007–2013, Texas Instruments Incorporated

Lock	Register Name	Address	Default	Description
OTHER LIMIT REGISTERS				
	AD_IN1 Low Limit	90h	00h	Low limit for analog input 1 measurement
	AD_IN1 High Limit	91h	FFh	High limit for analog input 1 measurement
	AD_IN2 Low Limit	92h	00h	Low limit for analog input 2 measurement
	AD_IN2 High Limit	93h	FFh	High limit for analog input 2 measurement
	AD_IN3 Low Limit	94h	00h	Low limit for analog input 3 measurement
	AD_IN3 High Limit	95h	FFh	High limit for analog input 3 measurement
	Reserved	96h-9Dh	N/D	
	AD_IN4 Low Limit	9Ch	00h	Low limit for analog input 4 measurement (Processor Vccp)
	AD_IN4 High Limit	9Dh	FFh	High limit for analog input 4 measurement (Processor Vccp)
	Reserved	9Eh-9Fh	N/D	
	AD_IN5 Low Limit	A0h	00h	Low limit for analog input 5 measurement
	AD_IN5 High Limit	A1h	FFh	High limit for analog input 5 measurement
	Reserved	A2h-A7h	N/D	
	AD_IN6 Low Limit	A8h	00h	Low limit for analog input 6 measurement
	AD_IN6 High Limit	A9h	FFh	High limit for analog input 6 measurement
	AD_IN7 Low Limit	AAh	00h	Low limit for analog input 7 measurement
	AD_IN7 High Limit	ABh	FFh	High limit for analog input 7 measurement
	AD_IN8 Low Limit	ACh	00h	Low limit for analog input 8 measurement
	AD_IN8 High Limit	ADh	FFh	High limit for analog input 8 measurement
	AD_IN9 Low Limit	AEh	00h	Low limit for analog input 9 measurement
	AD_IN9 High Limit	AFh	FFh	High limit for analog input 9 measurement
	$\overline{\text{PROCHOT}}$ User Limit	B0h	FFh	User settable limit for $\overline{\text{PROCHOT}}$
	Reserved	B1h	N/D	
	Vccp Limit Offsets	B2h	17h	VID offset values for window comparator for CPU Vccp (AD_IN4)
	Reserved	B3h	N/D	
	FAN Tach 1 Limit LSB	B4h	FCh	FAN Tach 1 Limit LSB
	FAN Tach 1 Limit MSB	B5h	FFh	FAN Tach 1 Limit MSB
	FAN Tach 2 Limit LSB	B6h	FCh	FAN Tach 2 Limit LSB
	FAN Tach 2 Limit MSB	B7h	FFh	FAN Tach 2 Limit MSB
	FAN Tach 3 Limit LSB	B8h	FCh	FAN Tach 3 Limit LSB
	FAN Tach 3 Limit MSB	B9h	FFh	FAN Tach 3 Limit MSB
	FAN Tach 4 Limit LSB	BAh	FCh	FAN Tach 4 Limit LSB
	FAN Tach 4 Limit MSB	BBh	FFh	FAN Tach 4 Limit MSB
SETUP REGISTERS				
	Special Function Control 1	BCh	00h	Controls the hysteresis for voltage limit comparisons. Also selects filtered or unfiltered temperature usage for temperature limit comparisons and fan control.
	Special Function Control 2	BDh	00h	Enables smart tach detection. Also selects 0.5°C or 1.0°C resolution for fan control.
x	GPI / VID Level Control	BEh	00h	Control the input threshold levels for the VIDx, and GPIO_x inputs.
x	PWM Ramp Control	BFh	00h	Controls the ramp rate of the PWM duty cycle when $\overline{\text{VRD_HOT}}$ is asserted, as well as the ramp rate when $\overline{\text{PROCHOT}}$ exceeds the user threshold.
x	Fan Boost Hysteresis (Zones 1/2)	C0h	44h	Fan Boost Hysteresis for zones 1 and 2
x	Fan Boost Hysteresis (Zones 3/4)	C1h	44h	Fan Boost Hysteresis for zones 3 and 4
x	Zones 1/2 Spike Smoothing Control	C2h	00h	Configures Spike Smoothing for zones 1 and 2

Copyright © 2007–2013, Texas Instruments Incorporated

Lock	Register Name	Address	Default	Description
x	LUT 1/2 MinPWM and Hysteresis	C3h	00h	Controls MinPWM and hysteresis setting for LUT 1 and 2 auto-fan control
x	LUT 3/4 MinPWM and Hysteresis	C4h	00h	Controls MinPWM and hysteresis setting for LUT 3 and 4 auto-fan control
	GPO	C5h	00h	Controls the output state of the GPIO pins
	$\overline{\text{PROCHOT}}$ Control	C6h	00h	Controls assertion $\overline{\text{PROCHOT}}$
	$\overline{\text{PROCHOT}}$ Time Interval	C7h	11h	Configures the time window over which the $\overline{\text{PROCHOT}}$ inputs are measured
x	PWM1 Control 1	C8h	00h	Controls PWM control source bindings.
x	PWM1 Control 2	C9h	00h	Controls PWM override and output polarity
x	PWM1 Control 3	CAh	00h	Controls PWM spin-up duration and duty cycle
x	PWM1 Control 4	CBh	00h	Frequency control for PWM1.
x	PWM2 Control 1	CCh	00h	Controls PWM control source bindings.
x	PWM2 Control 2	CDh	00h	Controls PWM override and output polarity
x	PWM2 Control 3	CEh	00h	Controls PWM spin-up duration and duty cycle
x	PWM2 Control 4	CFh	00h	Frequency control for PWM2
x	LUT 1 Base Temperature	D0h	00h	Base temperature to which look-up table offset is applied for LUT 1
x	LUT 2 Base Temperature	D1h	00h	Base temperature to which look-up table offset is applied for LUT 2
x	LUT 3 Base Temperature	D2h	00h	Base temperature to which look-up table offset is applied for LUT 3
x	LUT 4 Base Temperature	D3h	00h	Base temperature to which look-up table offset is applied for LUT 4
x	Step 2 Temp Offset	D4h	00h	Step 2 LUT 1/2 and LUT 3/4 Offset Temperatures
x	Step 3 Temp Offset	D5h	00h	Step 3 LUT 1/2 and LUT 3/4 Offset Temperatures
x	Step 4 Temp Offset	D6h	00h	Step 4 LUT 1/2 and LUT 3/4 Offset Temperatures
x	Step 5 Temp Offset	D7h	00h	Step 5 LUT 1/2 and LUT 3/4 Offset Temperatures
x	Step 6 Temp Offset	D8h	00h	Step 6 LUT 1/2 and LUT 3/4 Offset Temperatures
x	Step 7 Temp Offset	D9h	00h	Step 7 LUT 1/2 and LUT 3/4 Offset Temperatures
x	Step 8 Temp Offset	DAh	00h	Step 8 LUT 1/2 and LUT 3/4 Offset Temperatures
x	Step 9 Temp Offset	DBh	00h	Step 9 LUT 1/2 and LUT 3/4 Offset Temperatures
x	Step 10 Temp Offset	DCh	00h	Step 10 LUT 1/2 and LUT 3/4 Offset Temperatures
x	Step 11 Temp Offset	DDh	00h	Step 11 LUT 1/2 and LUT 3/4 Offset Temperatures
x	Step 12 Temp Offset	DEh	00h	Step 12 LUT 1/2 and LUT 3/4 Offset Temperatures
x	Step 13 Temp Offset	DFh	00h	Step 13 LUT 1/2 and LUT 3/4 Offset Temperatures
	TACH to PWM Binding	E0h	00h	Controls the tachometer input to PWM output binding
x	Tach Boost Control	E1h	3Fh	Controls the fan boost function upon a tach error
x	LM96194 Status/Control	E2h	00h	Gives Master error status, ASF reset control and Max PWM control
x	LM96194 Configuration	E3h	00h	Configures various outputs and provides START bit

Copyright © 2007–2013, Texas Instruments Incorporated

Lock	Register Name	Address	Default	Description
SLEEP STATE CONTROL AND MASK REGISTERS				
	Sleep State Control	E4h	03h	Used to communicate the system sleep state to the LM96194
	S1 GPI Mask	E5h	FFh	Sleep state S1 GPI error mask register
	S1 Fan Mask	E6h	0Fh	Sleep state S1 fan tach error mask register
	S3 GPI Mask	E7h	FFh	Sleep state S3 GPI error mask register
	S3 Fan Mask	E8h	0Fh	Sleep state S3 fan tach error mask register
	S3 Temperature/Voltage Mask	E9h	07h	Sleep state S3 temperature or voltage error mask register
	S4/5 GPI Mask	EAh	FFh	Sleep state S4/5 GPI error mask register
	S4/5 Temperature/Voltage Mask	EBh	07h	Sleep state S4/5 temperature or voltage error mask register
OTHER MASK REGISTERS				
	GPI Error Mask	ECh	FFh	Error mask register for GPI faults
	Miscellaneous Error Mask	EDh	3Fh	Error mask register for $\overline{\text{VRD_HOT}}$, $\overline{\text{GPI}}$, and dynamic Vccp limit checking.
ZONE 1a AND 2a TEMPERATURE READING ADJUSTMENT REGISTERS				
	Zone 1a Temp Adjust	EEh	00h	Allows all Zone 1a temperature measurements to be adjusted by a programmable offset
	Zone 2a Temp Adjust	EFh	00h	Allows all Zone 2a temperature measurements to be adjusted by a programmable offset
BLOCK COMMANDS				
	Block Write Command	F0h	N/A	SMBus Block Write Command Code
	Block Read Command	F1h	N/A	SMBus Block Write/Read Process call
	Fixed Block 0	F2h	N/A	Fixed block code address 40h, size 8 bytes
	Fixed Block 1	F3h	N/A	Fixed block code address 48h, size 8 bytes
	Fixed Block 2	F4h	N/A	Fixed block code address 50h, size 6 bytes
	Fixed Block 3	F5h	N/A	Fixed block code address 56h, size 16 bytes
	Fixed Block 4	F6h	N/A	Fixed block code address 67h, size 4 bytes
	Fixed Block 5	F7h	N/A	Fixed block code address 6Eh, size 8 bytes
	Fixed Block 6	F8h	N/A	Fixed block code address 78h, size 12 bytes
	Fixed Block 7	F9h	N/A	Fixed block code address 90h, size 32 bytes
	Fixed Block 8	FAh	N/A	Fixed block code address B4h, size 8 bytes
	Fixed Block 9	FBh	N/A	Fixed block code address C8h, size 8 bytes
	Fixed Block 10	FCh	N/A	Fixed block code address D0h, size 16 bytes
	Fixed Block 11	FDh	N/A	Fixed block code address E5h, size 9 bytes
	Reserved	FEh-FFh	N/A	Reserved for future commands

Copyright © 2007–2013, Texas Instruments Incorporated

FACTORY REGISTERS 00h–04h

Register 00h XOR Test

Register Address	Read/ Write	Register Name	Bit 7	Bit 6	Bit 5	Bit 4	Bit 3	Bit 2	Bit 1	Bit 0	Default Value
00h	R/W	XOR Test	RES							XEN	00h

Bit	Name	R/W	Default	Description	Sleep Masking
0	XEN	R/W	0	The LM96194 incorporates an XOR tree test mode. When the test mode is enabled by setting this bit, the part enters XOR test mode. Clearing this bit brings the part out of XOR test mode.	N/A
7:1	RES	R	0	Reserved	N/A

Register 01h SMBus Test

Register Address	Read/ Write	Register Name	Bit 7	Bit 6	Bit 5	Bit 4	Bit 3	Bit 2	Bit 1	Bit 0	Default Value
01h	R/W	SMBus Test	7	6	5	4	3	2	1	0	00h

This register can be used to verify that the SMBus can read and write to the device without effecting any programmed settings.

"REMOTE DIODE" MODE SELECT

Register 05h Remote-Diode Transistor Mode Select

Register Address	Read/ Write	Register Name	Bit 7	Bit 6	Bit 5	Bit 4	Bit 3	Bit 2	Bit 1	Bit 0	Default Value
05h	R/W	Transistor Mode Select	RES	RES	RES	RES	Qb_T_EN	Qa_T_EN	Pb_T_EN	Pa_T_EN	00h

Bit	Name	R/W	Description
0	Pa_T_EN	R/W	If set, Processor Remote-Diode "a" Transistor Mode enabled.
1	Pb_T_EN	R/W	If set, Processor Remote-Diode "b" Transistor Mode enabled.
2	Qa_T_EN	R/W	If set, MMBT3904 Remote-Diode "a" Transistor Mode enabled.
3	Qb_T_EN	R/W	If set, MMBT3904 Remote-Diode "b" Transistor Mode enabled.
7:4	RES	R	Reserved

VALUE REGISTERS SECTION 1

Registers 06-07h and 50–53h Unfiltered Temperature Value Registers

Register Address	Read/ Write	Register Name	Bit 7	Bit 6	Bit 5	Bit 4	Bit 3	Bit 2	Bit 1	Bit 0	Default Value
06h	R	Zone 1b (CPU) Temp	7	6	5	4	3	2	1	0	00h
07h	R	Zone 2b (MMBT3904) Temp	7	6	5	4	3	2	1	0	00h
50h	R	Zone 1a (CPU) Temp	7	6	5	4	3	2	1	0	00h

Copyright © 2007–2013, Texas Instruments Incorporated

Register Address	Read/ Write	Register Name	Bit 7	Bit 6	Bit 5	Bit 4	Bit 3	Bit 2	Bit 1	Bit 0	Default Value
51h	R	Zone 2a (MMBT3904) Temp	7	6	5	4	3	2	1	0	00h
52h	R	Zone 3 (Internal) Temp	7	6	5	4	3	2	1	0	00h
53h	R/W	Zone 4 (External Digital) Temp	7	6	5	4	3	2	1	0	00h

Zones 1 and 2 are all automatically updated by the LM96194. The Zone 3 (Internal) Temp and Zone 4 (External Digital) Temp registers may be written by an external SMBus device or can be assigned to AD_IN8, respectively.

The temperature registers for zones 1 and 2 will return a value of 80h if the remote diode pins are not implemented by the board designer or are not functioning properly.

Registers 08–09h and 54–55h Filtered Temperature Value Registers

Register Address	Read/ Write	Register Name	Bit 7	Bit 6	Bit 5	Bit 4	Bit 3	Bit 2	Bit 1	Bit 0	Default Value
08h	R	Zone 1b (CPU) Filtered Temp	7	6	5	4	3	2	1	0	00h
09h	R	Zone 2b (MMBT3904) Filtered Temp	7	6	5	4	3	2	1	0	00h
54h	R	Zone 1a (CPU) Filtered Temp	7	6	5	4	3	2	1	0	00h
55h	R	Zone 2a (MMBT3904) Filtered Temp	7	6	5	4	3	2	1	0	00h

These registers reflect the temperature of zones 1 and 2 after the spike smoothing filter has been applied.

The characteristics of the filtering can be adjusted by using the Zones 1/2 Spike Smoothing Control register.

Register 0Ah and 0Bh PWM1 and PWM2 8-bit Duty Cycle Value

Register Address	Read/ Write	Register Name	Bit 7	Bit 6	Bit 5	Bit 4	Bit 3	Bit 2	Bit 1	Bit 0	Default Value
0Ah	R	PWM1 Duty Cycle Value	7	6	5	4	3	2	1	0	00h
0Bh	R	PWM2 Duty Cycle Value	7	6	5	4	3	2	1	0	00h

Copyright © 2007–2013, Texas Instruments Incorporated

These registers report the current duty cycle being driven on the PWM1 or PWM2 outputs. It is the upper 8 bits of the 9-bit PWM value. It reflects the maximum duty cycle of any low-resolution or high-resolution PWM sources bound to the PWM1 or PWM2 outputs.

PWM Duty Cycle Overide Registers

Register 0Ch PWM1 Duty Cycle Override (low byte)

Register Address	Read/ Write	Register Name	Bit 7	Bit 6	Bit 5	Bit 4	Bit 3	Bit 2	Bit 1	Bit 0	Default Value
0Ch	R/W	PWM1 Duty Cycle Override (low byte)	PWM1_ DC[0]	PWM1_ EN_Hres _Over	RES	RES	RES	RES	RES	RES	00h

Bit	Name	R/W	Description
5:0	RES	R	Reserved
6	PWM1_EN_Hres_Over	R/W	When this bit is set, high-resolution override for PWM1 is enabled. When this bit is set, PWM1 will run at the programmed duty cycle: PWM1_DC[8:0]/256 * 100%; values over 100h are reserved.
7	PWM1_DC[0]	R/W	When this bit is set, bit [0] of the override duty cycle for PWM1 is set.

If manual PWM1 override is enabled in this register, all other PWM1 bindings are disabled except for the 100% override in the LM96194 Status Control register (E2h).

Register 0Dh PWM1 Duty Cycle Override (high byte)

Register Address	Read/ Write	Register Name	Bit 7	Bit 6	Bit 5	Bit 4	Bit 3	Bit 2	Bit 1	Bit 0	Default Value
0Dh	R/W	PWM1 Duty Cycle Override (high byte)	PWM1_DC[8:1]								00h

These bits set the upper 8-bits of the 9-bit override duty cycle value for PWM1.

Register 0Eh PWM2 Duty Cycle Override (low byte)

Register Address	Read/ Write	Register Name	Bit 7	Bit 6	Bit 5	Bit 4	Bit 3	Bit 2	Bit 1	Bit 0	Default Value
0Eh	R/W	PWM 2 Duty Cycle Override (low byte)	PWM2_ DC[0]	PWM2_ EN_Hres _Over	RES	RES	RES	RES	RES	RES	00h

Bit	Name	R/W	Description
5:0	RES	R	Reserved
6	PWM2_EN_Hres_Over	R/W	When this bit is set, high-resolution override for PWM2 is enabled. When this bit is set, PWM2 will run at the programmed duty cycle: PWM2_DC[8:0]/256 * 100%; values over 100h are reserved.
7	PWM2_DC[0]	R/W	When this bit is set, bit [0] of the override duty cycle for PWM2 is set.

If manual PWM 2 override is enabled in this register, all other PWM 2 bindings are disabled except for the 100% override in the LM96194 Status Control register (E2h).

Register 0Fh PWM2 Duty Cycle Override (high byte)

Register Address	Read/ Write	Register Name	Bit 7	Bit 6	Bit 5	Bit 4	Bit 3	Bit 2	Bit 1	Bit 0	Default Value
0Fh	R/W	PWM2 Duty Cycle Override (high byte)	PWM2_DC[8:1]								00h

Copyright © 2007–2013, Texas Instruments Incorporated

These bits set the upper 8-bits of the 9-bit override duty cycle value for PWM2.

EXTENDED RESOLUTION VALUE REGISTERS

Registers 10h - 17h Zone 1 (CPU) and Zone 2 (MMBT3904) Extended Resolution Unfiltered Temperature Value Registers, Most and Least Significant Bytes

Register Address	Read/ Write	Register Name	Bit 7	Bit 6	Bit 5	Bit 4	Bit 3	Bit 2	Bit 1	Bit 0	Default Value
10h	R	Z1a_LSB	0.5	0	0	0	0	0	0	0	00h
11h	R	Z1a_MSB	Sign	64	32	16	8	4	2	1	00h

Register 11h is a mirror of register Zone 1a (CPU) Temp at address 50h.

Register Address	Read/ Write	Register Name	Bit 7	Bit 6	Bit 5	Bit 4	Bit 3	Bit 2	Bit 1	Bit 0	Default Value
12h	R	Z1b_LSB	0.5	0	0	0	0	0	0	0	00h
13h	R	Z1b_MSB	Sign	64	32	16	8	4	2	1	00h

Register 13h is a mirror of register Zone 1b (CPU) Temp at address 06h.

Register Address	Read/ Write	Register Name	Bit 7	Bit 6	Bit 5	Bit 4	Bit 3	Bit 2	Bit 1	Bit 0	Default Value
14h	R	Z2a_LSB	0.5	0	0	0	0	0	0	0	00h
15h	R	Z2a_MSB	Sign	64	32	16	8	4	2	1	00h

Register 15h is a mirror of register Zone 2a (MMBT3904) Temp at address 51h.

Register Address	Read/ Write	Register Name	Bit 7	Bit 6	Bit 5	Bit 4	Bit 3	Bit 2	Bit 1	Bit 0	Default Value
16h	R	Z2b_LSB	0.5	0	0	0	0	0	0	0	00h
17h	R	Z2b_MSB	Sign	64	32	16	8	4	2	1	00h

Register 17h is a mirror of register Zone 2b (MMBT3904) Temp at address 07h.

Registers 18h – 1Fh Zone 1 (CPU) and Zone 2 (MMBT3904) Extended Resolution Filtered Value Registers, Most and Least Significant Bytes

Register Address	Read/ Write	Register Name	Bit 7	Bit 6	Bit 5	Bit 4	Bit 3	Bit 2	Bit 1	Bit 0	Default Value
18h	R	Z1a_F_LSB	0.5	0.25	0.125	0.0625	0	0	0	0	00h
19h	R	Z1a_F_MSB	Sign	64	32	16	8	4	2	1	00h

Register 19h is a mirror of register Zone 1a (CPU) Filtered Temp at address 54h.

Register Address	Read/ Write	Register Name	Bit 7	Bit 6	Bit 5	Bit 4	Bit 3	Bit 2	Bit 1	Bit 0	Default Value
1Ah	R	Z1b_F_LSB	0.5	0.25	0.125	0.0625	0	0	0	0	00h
1Bh	R	Z1b_F_MSB	Sign	64	32	16	8	4	2	1	00h

Register 1Bh is a mirror of register Zone 1b (CPU) Filtered Temp at address 08h.

Register Address	Read/ Write	Register Name	Bit 7	Bit 6	Bit 5	Bit 4	Bit 3	Bit 2	Bit 1	Bit 0	Default Value
1Ch	R	Z2a_F_LSB	0.5	0.25	0.125	0.0625	0	0	0	0	00h
1Dh	R	Z2a_F_MSB	Sign	64	32	16	8	4	2	1	00h

Copyright © 2007–2013, Texas Instruments Incorporated

Register 1Dh is a mirror of register Zone 2a (MMBT3904) Filtered Temp at address 55h.

Register Address	Read/ Write	Register Name	Bit 7	Bit 6	Bit 5	Bit 4	Bit 3	Bit 2	Bit 1	Bit 0	Default Value
1Eh	R	Z2b_F_LSB	0.5	0.25	0.125	0.0625	0	0	0	0	00h
1Fh	R	Z2b_F_MSB	Sign	64	32	16	8	4	2	1	00h

Register 1Fh is a mirror of register Zone 2b (MMBT3904) Filtered Temp at address 09h.

Registers 20h – 23h Zone 3 and Zone 4 Extended Resolution Value Registers, Most and Least Significant Bytes

Register Address	Read/ Write	Register Name	Bit 7	Bit 6	Bit 5	Bit 4	Bit 3	Bit 2	Bit 1	Bit 0	Default Value
20h	R/W	Z3_LSB	0.5	0	0	0	0	0	0	0	00h
21h	R/W	Z3_MSB	Sign	64	32	16	8	4	2	1	00h

Register 21h is a mirror of register Zone 3 (Internal) Temp at address 52h.

Register Address	Read/ Write	Register Name	Bit 7	Bit 6	Bit 5	Bit 4	Bit 3	Bit 2	Bit 1	Bit 0	Default Value
22h	R/W	Z4_LSB	0.5	0	0	0	0	0	0	0	00h
23h	R/W	Z4_MSB	Sign	64	32	16	8	4	2	1	00h

Register 23h is a mirror of register Zone 4 (External Digital) Temp at address 53h.

PI LOOP FAN CONTROL SETUP REGISTERS

Register 31h Internal/External Temperature Source Select

Register Address	Read/ Write	Register Name	Bit 7	Bit 6	Bit 5	Bit 4	Bit 3	Bit 2	Bit 1	Bit 0	Default Value
31h	R/W	Internal/ External Temperature Source Select	RES	RES	RES	INT_ WR_E	Z2bE	Z1bE	EXT_ AD8	INT_ DIS	00h

Bit	Name	R/W	Description
0	INT_DIS	R/W	This bit must be left cleared so that the Internal Temperature Register (Zone 3) will be automatically updated with the internal temperature reading from the LM96194's internal thermal diode. All functions related to the Internal Temperature Register value are affected by this bit (LUTs, Temperature Boost, etc.). If this bit is set erroneous values may indavertly be used by the fan control circuitry.
1	EXT_ADC8	R/W	When this bit is set, the External Digital Temperature register (Zone 4) will become read-only and will be automatically updated from the ADC_IN15 Voltage Value register minus 128 by inverting the MSb. Subtraction of 128 or inverting the MSb is required since the data in the temperature registers are signed. When this bit is cleared the External Digital Temperature register is writable and must be updated over the SMBus by software. All functions related to the External Digital Temperature register are affected by this bit (LUTs, Temperature Boost, etc.)
2	Z1bE	R/W	When this bit is set, pin 23 is enabled as a Remote 1b input. When this bit is cleared pin 23 is set as a AD_IN1 input.
3	Z2bE	R/W	When this bit is set, pin 24 is enabled as a Remote 2b input. When this bit is cleared pin 24 is set as a AD_IN2 input.
4	INT_WR_E	R/W	When this bit is set, the Internal Temperature Value register may be updated by an external SMBus write. All automatic updates of the Internal Temperature Value register will cease.
7:3	RES	R	Reserved

Copyright © 2007–2013, Texas Instruments Incorporated

Register 32h PWM Filter Settings

Register Address	Read/ Write	Register Name	Bit 7	Bit 6	Bit 5	Bit 4	Bit 3	Bit 2	Bit 1	Bit 0	Default Value
32h	R/W	PWM_Filter	RES	FC_PWM2[2:0]			RES	FC_PWM1[2:0]			00h

Bit	Name	R/W	Description
2:0	FC_PWM1[2:0]	R/W	Sets the filter coefficient for the IIR filter on PWM1 low resolution sources.
3	RES	R	Reserved
6:4	FC_PWM2[2:0]	R/W	Sets the filter coefficient for the IIR filter on PWM2 low resolution sources.
7	RES	R	Reserved

FC_PWM1[2:0] or FC_PWM2[2:]	95% Settling Time Interval
000	Filter bypassed
001	0.098s
010	0.237s
011	0.510s
100	1.056s
101	2.147s
110	4.328s
111	8.689s

Register 33h PWM1 Filter Shutoff Threshold

Register Address	Read/ Write	Register Name	Bit 7	Bit 6	Bit 5	Bit 4	Bit 3	Bit 2	Bit 1	Bit 0	Default Value
33h	R/W	PWM1_Filter Shut_Thresh	PWM1_SHUT_DC[4:0]					RES	RES	RES	00h

Bit	Name	R/W	Description
2:0	RES	R	Reserved
7:3	PWM1_SHUT_DC[4:0]	R/W	Sets the filter shutoff threshold. The actual duty cycle threshold is 3.15% times this value. If the PWM filter is disabled the shutdown threshold is also disabled. The shutdown threshold allows the PWM1 output to be turned off for duty cycles less than the programmed value.

Bit [7:3]	9-bit Threshold	Corresponding Duty Cycle
0	0	0.000%
1	8	3.125%
2	16	6.25%
. . .	. . .	. . .
29	232	90.625%
30	240	93.750%
31	248	96.875%

Copyright © 2007–2013, Texas Instruments Incorporated

Register 34h PWM2 Filter Shutoff Threshold

Register Address	Read/ Write	Register Name	Bit 7	Bit 6	Bit 5	Bit 4	Bit 3	Bit 2	Bit 1	Bit 0	Default Value
34h	R/W	PWM2_Filter Shut_Thresh	PWM2_SHUT_DC[4:0]					RES	RES	RES	00h

Bit	Name	R/W	Description
2:0	RES	R	Reserved
7:3	PWM2_SHUT_DC[4:0]	R/W	Sets the filter shutoff threshold. The actual duty cycle threshold is 3.15% times this value. If the PWM filter is disabled the shutdown threshold is also disabled. The shutdown threshold allows the PWM1 output to be turned off for duty cycles less than the programmed value.

Bit [7:3]	9-bit Threshold	Corresponding Duty Cycle
0	0	0.000%
1	8	3.125%
2	16	6.25%
. . .	. . .	. . .
29	232	90.625%
30	240	93.750%
31	248	96.875%

Register 35h PI/LUT Fan Control Bindings

Register Address	Read/ Write	Register Name	Bit 7	Bit 6	Bit 5	Bit 4	Bit 3	Bit 2	Bit 1	Bit 0	Default Value
35h	R/W	Fan Control Bindings	LUT4 _Z2	LUT3 _Z1	LUT2 _Z2	LUT1 _Z1	PWM2 _PI	PWM1 _PI	PI_Z2	PI_Z1	30h

Bit	Name	R/W	Description
0	PI_Z1	R/W	When this bit is set, the PI controller is bound to the P1 temperature (zone 1). This also changes the available filtering options for the P1 temperature.
1	PI_Z2	R/W	When this bit is set, the PI controller is bound to the P2 temperature (zone 2). This also changes the available filtering options for the P2 temperature zone.
2	PWM1_PI	R/W	When this bit is set, the PWM1 output is bound to the PI controller.
3	PWM2_PI	R/W	When this bit is set, the PWM2 output is bound to the PI controller.
4	LUT1_Z1	R/W	When this bit is set, LUT1 will use the P1 temperature (zone 1) instead of the Internal temperature (zone 3).
5	LUT2_Z2	R/W	When this bit is set, LUT2 will use the P2 temperature (zone2) instead of the External Digital temperature (zone 4).
6	LUT3_Z1	R/W	When this bit is set, LUT3 will use the P1 temperature (zone1) instead of the Internal temperature (zone 3).
7	LUT4_Z2	R/W	When this bit is set, LUT4 will use the P2 temperature (zone 2) instead of the External Digital temperature (zone 4).

Register 36h PI Controller Minimum PWM and Hysteresis

Register Address	Read/ Write	Register Name	Bit 7	Bit 6	Bit 5	Bit 4	Bit 3	Bit 2	Bit 1	Bit 0	Default Value
36h	R/W	PI MinPWM and Hyst	PI_MinPWM[3:0]				PI_Hyst[3:0]				00h

Copyright © 2007–2013, Texas Instruments Incorporated

Bit	Name	R/W	Description
3:0	PI_Hyst[3:0]	R/W	Sets the hysteresis for the PI Loop fan controller in 0.5°C steps up to 7.5°C.
7:4	PI_MinPWM[3:0]	R/W	Defines the minimum PWM output for the PI Loop fan controller in 6.25% steps up to 93.75%.

PI_Hyst[3:0]	Hysteresis (°C)
0h	0
1h	0.5
2h	1.0
3h	1.5
4h	2.0
5h	2.5
6h	3.0
7h	3.5
8h	4.0
9h	4.5
Ah	5.0
Bh	5.5
Ch	6.0
Dh	6.5
Eh	7.0
Fh	7.5

PI_MinPWM[3:0]	Minimum Duty Cycle
0h	0.00%
1h	6.25%
2h	12.5%
3h	18.75%
4h	25.00%
5h	31.25%
6h	37.50%
7h	43.75%
8h	50.00%
9h	56.25%
Ah	62.50%
Bh	68.75%
Ch	75.00%
Dh	81.25%
Eh	87.5%
Fh	93.75%

Registers 37h and 38h Zone 1 and 2 PI Controller Target Temperature (Tcontrol)

Register Address	Read/ Write	Register Name	Bit 7	Bit 6	Bit 5	Bit 4	Bit 3	Bit 2	Bit 1	Bit 0	Default Value
37h	R/W	Zone 1 Tcontrol	7	6	5	4	3	2	1	0	00h
38h	R/W	Zone 2 Tcontrol	7	6	5	4	3	2	1	0	00h

Copyright © 2007–2013, Texas Instruments Incorporated

Same format as temperature value register for Zone 1 and Zone 2. The PWM output controls the airflow over the processors and thus the temperature of the processors is adjusted by the PI loop to maintain the hottest Zone 1 or Zone 2 temperature reading between their respective values for Tcontrol and Tcontrol - hysteresis. Intel specifies an optimum Tcontrol temperature for some of it's processors that can be found in the MSR register space.

Register 39h and 3Ah Zone 1 and 2 PI Fan Control Off Temperature (Toff)

Register Address	Read/ Write	Register Name	Bit 7	Bit 6	Bit 5	Bit 4	Bit 3	Bit 2	Bit 1	Bit 0	Default Value
39h	R/W	Z1 Toff	7	6	5	4	3	2	1	0	80h
3Ah	R/W	Z2 Toff	7	6	5	4	3	2	1	0	80h

Same format as temperature value register for Zone 1 and Zone 2. When these registers are set to 80h, the Toff function is disabled. Toff is the temperature at which the PI control loop output is forced to zero duty cycle.

Register 3Bh Proportional Coefficient

Register Address	Read/ Write	Register Name	Bit 7	Bit 6	Bit 5	Bit 4	Bit 3	Bit 2	Bit 1	Bit 0	Default Value
3Bh	R/W	P Coefficient	7	6	5	4	3	2	1	0	00h

Register 3Ch Integral Coefficient

Register Address	Read/ Write	Register Name	Bit 7	Bit 6	Bit 5	Bit 4	Bit 3	Bit 2	Bit 1	Bit 0	Default Value
3Ch	R/W	I Coefficient	7	6	5	4	3	2	1	0	00h

Register 3Dh PI Coefficient Exponents

Register Address	Read/ Write	Register Name	Bit 7	Bit 6	Bit 5	Bit 4	Bit 3	Bit 2	Bit 1	Bit 0	Default Value
3Dh	R/W	PI Exponents	RES	RES	RES	RES	PCE[1:0]		ICE[1:0]		00h

Bit	Name	R/W	Description
1:0	ICE[1:0]	R/W	PI controller integral coefficient exponent (2-bit signed value)
2:3	PCE[1:0]	R/W	PI controller proportional coefficient exponent (2-bit signed value)
7:4	RES	R	Reserved

ICE[1:0]	Integral Exponent
10b	-2
11b	-1
00b	0
01b	1

PCE[1:0]	Proportional Exponent
10b	-2
11b	-1
00b	0
01b	1

Copyright © 2007–2013, Texas Instruments Incorporated

DEVICE IDENTIFICATION REGISTERS (3Eh-3Fh)

Register 3Eh Manufacturer ID

Register Address	Read/ Write	Register Name	Bit 7	Bit 6	Bit 5	Bit 4	Bit 3	Bit 2	Bit 1	Bit 0	Default Value
3Eh	R	Manufacturer ID	0	0	0	0	0	0	0	0	01h

The Manufacturer ID register contains the manufacturer identification number. This number is assigned by Texas Instruments and is a method for uniquely identifying the part manufacturer.

Register 3Fh Version/Stepping

Register Address	Read/ Write	Register Name	Bit 7	Bit 6	Bit 5	Bit 4	Bit 3	Bit 2	Bit 1	Bit 0	Default Value
3Fh	R	Version/Stepping	VER[3:0]				STP[3:0]				79h
			0	1	1	1	1	0	0	1	

The four least significant bits of the Version/Stepping register [3:0] contain the current stepping of the LM96194 silicon. The four most significant bits [7:4] reflect the LM96194 version number. The LM96194 has a fixed version number of 0111b which matches the LM93, since the LM96194 is closely related to the LM93. To differentiat the LM96194 from the LM93 for the first stepping of LM96194 this register reads 01111000b. For the second stepping of the LM96194, this register reads 01111001b and so on. It is incrementally increased for future versions for the silicon. The final released silicon has a stepping of 9h therefore this register reads 79h. Since the LM96194 is so closely related to the LM94 the LM94 and LM96194 have the same VER and STP values.

The register is used by application software to identify which device in the family of hardware monitoring ASICs has been implemented in the given system. Based on this information, software can determine which registers to read from and write to. Application software may use the current stepping to implement work-a-rounds for bugs found in a specific silicon stepping.

BMC ERROR STATUS REGISTERS 40h–47h

The B_Error Status Registers contain several bits that each represent a particular error event that the LM96194 can monitor. The LM96194 sets a given bit whenever the corresponding error event occurs. The BMC_ERR bit in the LM96194 Status/Control register is also set if any bit in the BMC Error Status registers is set. If enabled, $\overline{\text{ALERT}}$ is also asserted anytime BMC_ERR is set. The exception to this is the fixed threshold error status bits in the $\overline{\text{PROCHOT}}$ Error Status registers. They have no influence on BMC_ERR or $\overline{\text{ALERT}}$.

Once a bit is set in the BMC Error Status registers, it is not automatically cleared by the LM96194 if the error event goes away. Each bit must be cleared by software. If software attempts to clear a bit while the error condition still exists, and the error is unmasked, the bit does not clear. If the error is masked, the bit can be cleared even if the error condition still exists.

If the LM96194 is in ASF mode, the BMC Error Status registers are both read-to-clear and write-one-to-clear. When not in ASF mode, the registers are only write-one-to-clear.

Each register described in this section has a column labeled **Sleep Masking**. This column describes which error events are masked in various sleep states. The sleep state of the system is communicated to the LM96194 by writing to the Sleep State Control register. If a sleep state in this column has a '*' next to it, it denotes that the error event is optionally masked in that sleep mode, depending on the Sleep State Mask registers.

Register 40h B_Error Status 1

Register Address	Read/ Write	Register Name	Bit 7	Bit 6	Bit 5	Bit 4	Bit 3	Bit 2	Bit 1	Bit 0	Default Value
40h	RWC	B_Error Status 1	RES			VRD_ERR	ZN4_ERR	ZN3_ERR	ZN2_ERR	ZN1_ERR	00h

Copyright © 2007–2013, Texas Instruments Incorporated

Bit	Name	R/W	Description	Sleep Masking
0	ZN1_ERR	RWC	This bit is set when any zone 1 temperature has fallen outside its associated temperature limits.	S3*, S4/5*
1	ZN2_ERR	RWC	This bit is set when any zone 2 temperature has fallen outside its associated temperature limits.	S3*, S4/5*
2	ZN3_ERR	RWC	This bit is set when the zone 3 temperature has fallen outside the zone 3 temperature limits.	none
3	ZN4_ERR	RWC	This bit is set when the zone 4 temperature has fallen outside the zone 4 temperature limits.	none
4	VRD_ERR	RWC	This bit is set when the $\overline{\text{VRD_HOT}}$ input has been asserted.	S3, S4/5
7:5	RES	R	Reserved	N/A

Register 41h B_Error Status 2

Register Address	Read/ Write	Register Name	Bit 7	Bit 6	Bit 5	Bit 4	Bit 3	Bit 2	Bit 1	Bit 0	Default Value
41h	RWC	B_Error Status 2	RES	ADIN4 _ERR	RES	RES	RES	ADIN3 _ERR	ADIN2 _ERR	ADIN1 _ERR	00h

Bit	Name	R/W	Description	Sleep Masking
0	AD1_ERR	RWC	This bit is set when the AD_IN1 voltage has fallen outside the range defined by the AD_IN1 Low Limit and the AD_IN1 High Limit registers.	S3, S4/5
1	AD2_ERR	RWC	This bit is set when the AD_IN2 voltage has fallen outside the range defined by the AD_IN2 Low Limit and the AD_IN2 High Limit registers.	S3, S4/5
2	AD3_ERR	RWC	This bit is set when the AD_IN3 voltage has fallen outside the range defined by the AD_IN3 Low Limit and the AD_IN3 High Limit registers.	S3, S4/5
3:5	RES	RWC	RESERVED	
6	AD4_ERR	RWC	This bit is set when the AD_IN7 voltage has fallen outside the range defined by the AD_IN7 Low Limit and the AD_IN7 High Limit registers.	S3, S4/5
7	RES	RWC	RESERVED	

Register 42h B_Error Status 3

Register Address	Read/ Write	Register Name	Bit 7	Bit 6	Bit 5	Bit 4	Bit 3	Bit 2	Bit 1	Bit 0	Default Value
42h	RWC	B_Error Status 3	ADIN9 _ERR	ADIN8 _ERR	ADIN7 _ERR	ADIN6 _ERR	RES	RES	RES	ADIN5 _ERR	00h

Bit	Name	R/W	Description	Sleep Masking
0	AD5_ERR	RWC	This bit is set when the AD_IN9 voltage has fallen outside the range defined by the AD_IN9 Low Limit and the AD_IN9 High Limit registers.	S3, S4/5
1:3	RES	RWC	RESERVED	
4	AD6_ERR	RWC	This bit is set when the AD_IN13 voltage has fallen outside the range defined by the AD_IN13 Low Limit and the AD_IN13 High Limit registers.	S3*, S4/5*
5	AD7_ERR	RWC	This bit is set when the AD_IN14 voltage has fallen outside the range defined by the AD_IN14 Low Limit and the AD_IN14 High Limit registers.	S3*, S4/5*
6	AD8_ERR	RWC	This bit is set when the AD_IN15 voltage has fallen outside the range defined by the AD_IN15 Low Limit and the AD_IN15 High Limit registers.	S3, S4/5
7	AD9_ERR	RWC	This bit is set when the AD_IN16 voltage has fallen outside the range defined by the AD_IN16 Low Limit and the AD_IN16 High Limit registers.	none

Copyright © 2007–2013, Texas Instruments Incorporated

Register 43h B_Error Status 4

Register Address	Read/ Write	Register Name	Bit 7	Bit 6	Bit 5	Bit 4	Bit 3	Bit 2	Bit 1	Bit 0	Default Value
43h	RWC	B_Error Status 4	D2a_ ERR	D1a_ ERR	RES	$DV_{DD}P1$ _ERR	GPI9 _ERR	RES	D2b _ERR	D1b _ERR	00h

Bit	Name	R/W	Description	Sleep Masking
0	D1b_ERR	RWC	Diode Fault Error This bit is set if there is an open or short circuit on the REMOTE1b+ and REMOTE1− pins.	S3*, S4/5*
1	D2b_ERR	RWC	Diode Fault Error This bit is set if there is an open or short circuit on the REMOTE2b+ and REMOTE2− pins.	S3*, S4/5*
2	RES	RWC	RESERVED	
3	GPI8	RWC	SCSI Fuse Error This bit is set if $\overline{\text{GPI8}}$ has been asserted. Enabled only when VID mode is set to VRD 10.	S3, S4/5
4	$DV_{DD}P$_ERR	RWC	Dynamic Vccp Limit Error. This bit is set if AD_IN4 (Vccp) did not match the requested voltage as reported by P1_VID[7:0].	S3, S4/5
5	RES	RWC	RESERVED	
6	D1a_ERR	RWC	Diode Fault Error This bit is set if there is an open or short circuit on the REMOTE1a+ and REMOTE1− pins.	S3*, S4/5*
7	D2a_ERR	RWC	Diode Fault Error This bit is set if there is an open or short circuit on the REMOTE2a+ and REMOTE2− pins.	S3*, S4/5*

Register 44h B_P_$\overline{\text{PROCHOT}}$ Error Status

Register Address	Read/ Write	Register Name	Bit 7	Bit 6	Bit 5	Bit 4	Bit 3	Bit 2	Bit 1	Bit 0	Default Value
44h	RWC	B_P_$\overline{\text{PROCHOT}}$ Error Status	PH _ERR	TMAX	T100	T75	T50	T25	T12	T0	00h

Bit	Name	R/W	Description	Sleep Masking
0	T0	RWC	Set when $\overline{\text{PROCHOT}}$ has had a throttled event. This bit is set for any amount of $\overline{\text{PROCHOT}}$ throttling >0%.	S3, S4/5
1	T12	RWC	Set when $\overline{\text{PROCHOT}}$ has throttled greater than or equal to 0.39% but less than 12.5%.	S3, S4/5
2	T25	RWC	Set when $\overline{\text{PROCHOT}}$ has throttled greater than or equal to 12.5% but less than 25%.	S3, S4/5
3	T50	RWC	Set when $\overline{\text{PROCHOT}}$ has throttled greater than or equal to 25% but less than 50%.	S3, S4/5
4	T75	RWC	Set when $\overline{\text{PROCHOT}}$ has throttled greater than or equal to 50% but less than 75%.	S3, S4/5
5	T100	RWC	Set when $\overline{\text{PROCHOT}}$ has throttled greater than or equal to 75% but less than 100%.	S3, S4/5
6	TMAX	RWC	Set when $\overline{\text{PROCHOT}}$ has throttled 100%.	S3, S4/5
7	PH_ERR	RWC	Set when $\overline{\text{PROCHOT}}$ has throttled more than the user limit.	S3, S4/5

Copyright © 2007–2013, Texas Instruments Incorporated

The PH1_ERR bit is the only bit in this register that will set BMC_ ERR in the LM96194 Status/Control register.

Register 46h B_GPI Error Status

Register Address	Read/ Write	Register Name	Bit 7	Bit 6	Bit 5	Bit 4	Bit 3	Bit 2	Bit 1	Bit 0	Default Value
46h	RWC	B_GPI Error Status	GPI7 _ERR	GPI6 _ERR	GPI5 _ERR	GPI4 _ERR	GPI3 _ERR	GPI2 _ERR	GPI1 _ERR	GPI0 _ERR	00h

Bit	Name	R/W	Description	Sleep Masking
0	GPI0_ERR	RWC	This bit is set whenever GPIO0 is driven low (unless masked via the GPI Error Mask register).	S1*, S3*, S4/5*
1	GPI1_ERR	RWC	This bit is set whenever GPIO1 is driven low (unless masked via the GPI Error Mask register).	S1*, S3*, S4/5*
2	GPI2_ERR	RWC	This bit is set whenever GPIO2 is driven low (unless masked via the GPI Error Mask register).	S1*, S3*, S4/5*
3	GPI3_ERR	RWC	This bit is set whenever GPIO3 is driven low (unless masked via the GPI Error Mask register).	S1*, S3*, S4/5*
4	GPI4_ERR	RWC	This bit is set whenever GPIO4 is driven low (unless masked via the GPI Error Mask register).	S1*, S3*, S4/5*
5	GPI5_ERR	RWC	This bit is set whenever GPIO5 is driven low (unless masked via the GPI Error Mask register).	S1*, S3*, S4/5*
6	GPI6_ERR	RWC	This bit is set whenever GPIO6 is driven low (unless masked via the GPI Error Mask register).	S1*, S3*, S4/5*
7	GPI7_ERR	RWC	This bit is set whenever GPIO7 is driven low (unless masked via the GPI Error Mask register).	S1*, S3*, S4/5*

Register 47h B_Fan Error Status

Register Address	Read/ Write	Register Name	Bit 7	Bit 6	Bit 5	Bit 4	Bit 3	Bit 2	Bit 1	Bit 0	Default Value
47h	RWC	B_Fan Error Status	RES				FAN4 _ERR	FAN3 _ERR	FAN2 _ERR	FAN1 _ERR	00h

Bit	Name	R/W	Description	Sleep Masking
0	FAN1_ERR	RWC	This bit is set when the Fan Tach 1 value register is above the value set in the Fan Tach 1 Limit register.	S1*, S3*, S4/5
1	FAN2_ERR	RWC	This bit is set when the Fan Tach 2 value register is above the value set in the Fan Tach 2 Limit register.	S1*, S3*, S4/5
2	FAN3_ERR	RWC	This bit is set when the Fan Tach 3 value register is above the value set in the Fan Tach 3 Limit register.	S1*, S3*, S4/5
3	FAN4_ERR	RWC	This bit is set when the Fan Tach 4 value register is above the value set in the Fan Tach 4 Limit register.	S1*, S3*, S4/5
7:4	RES	R	Reserved	N/A

HOST ERROR STATUS REGISTERS

The Host Error Status Registers contain several bits that each represent a particular error event that the LM96194 can monitor. The LM96194 sets a given bit whenever the corresponding error event occurs. The HOST_ERR bit in the LM96194 Status/Control register also sets if any bit in the Host Error Status registers is set. The exception to this is the fixed threshold error status bits in the PROCHOT Error Status registers. They have no influence on HOST_ERR.

Once a bit is set in the Host Error Status registers, it is not automatically cleared by the LM96194 if the error event goes away. Each bit must be cleared by software. If software attempts to clear a bit while the error condition still exists, the bit does not clear.

Software must specifically write a 1 to any bits it wishes to clear in the Host Error Status registers (write-one-to-clear).

Each register described in this section has a column labeled **Sleep Masking**. This column describes which error events are masked in various sleep states. The sleep state of the system is communicated to the LM96194 by writing to the Sleep State Control register. If a sleep state in this column has a '*' next to it, it denotes that the error event is optionally masked in that sleep mode, depending on the Sleep State Mask registers.

Register 48h H_Error Status 1

Register Address	Read/ Write	Register Name	Bit 7	Bit 6	Bit 5	Bit 4	Bit 3	Bit 2	Bit 1	Bit 0	Default Value
48h	RWC	H_Error Status 1	RES			VRD _ERR	ZN4_ ERR	ZN3_ ERR	ZN2_ ERR	ZN1_ ERR	00h

Bit	Name	R/W	Description	Sleep Masking
0	ZN1_ERR	RWC	This bit is set when any zone 1 temperature has fallen outside its associated temperature limits.	S3*, S4/5*
1	ZN2_ERR	RWC	This bit is set when any zone 2 temperature has fallen outside its associated temperature limits.	S3*, S4/5*
2	ZN3_ERR	RWC	This bit is set when the zone 3 temperature has fallen outside the zone 3 temperature limits.	none
3	ZN4_ERR	RWC	This bit is set when the zone 4 temperature has fallen outside the zone 4 temperature limits.	none
4	VRD_ERR	RWC	This bit is set when the $\overline{\text{VRD_HOT}}$ input has been asserted.	S3, S4/5
7:5	RES	R	Reserved	N/A

Register 49h H_Error Status 2

Register Address	Read/ Write	Register Name	Bit 7	Bit 6	Bit 5	Bit 4	Bit 3	Bit 2	Bit 1	Bit 0	Default Value
49h	RWC	H_Error Status 2	RES	ADIN4 _ERR	RES	RES	RES	ADIN3 _ERR	ADIN2 _ERR	ADIN1 _ERR	00h

Bit	Name	R/W	Description	Sleep Masking
0	AD1_ERR	RWC	This bit is set when the AD_IN1 voltage has fallen outside the range defined by the AD_IN1 Low Limit and the AD_IN1 High Limit registers.	S3, S4/5
1	AD2_ERR	RWC	This bit is set when the AD_IN2 voltage has fallen outside the range defined by the AD_IN2 Low Limit and the AD_IN2 High Limit registers.	S3, S4/5
2	AD3_ERR	RWC	This bit is set when the AD_IN3 voltage has fallen outside the range defined by the AD_IN3 Low Limit and the AD_IN3 High Limit registers.	S3, S4/5
35	RES	RWC	RESERVED	
6	AD4_ERR	RWC	This bit is set when the AD_IN4 voltage has fallen outside the range defined by the AD_IN4 Low Limit and the AD_IN4 High Limit registers.	S3, S4/5
7	RES	RWC	RESERVED	

Register 4Ah H_Error Status 3

Register Address	Read/ Write	Register Name	Bit 7	Bit 6	Bit 5	Bit 4	Bit 3	Bit 2	Bit 1	Bit 0	Default Value
4Ah	RWC	H_Error Status 3	ADIN9 _ERR	ADIN8 _ERR	ADIN7 _ERR	ADIN6 _ERR	RES	RES	RES	ADIN5 _ERR	00h

Copyright © 2007–2013, Texas Instruments Incorporated

Bit	Name	R/W	Description	Sleep Masking
0	AD5_ERR	RWC	This bit is set when the AD_IN5 voltage has fallen outside the range defined by the AD_IN5 Low Limit and the AD_IN5 High Limit registers.	S3, S4/5
1:3	RES	RWC	RESERVED	
4	AD6_ERR	RWC	This bit is set when the AD_IN13 voltage has fallen outside the range defined by the AD_IN13 Low Limit and the AD_IN13 High Limit registers.	S3*, S4/5*
5	AD7_ERR	RWC	This bit is set when the AD_IN14 voltage has fallen outside the range defined by the AD_IN14 Low Limit and the AD_IN14 High Limit registers.	S3*, S4/5*
6	AD8_ERR	RWC	This bit is set when the AD_IN15 voltage has fallen outside the range defined by the AD_IN15 Low Limit and the AD_IN15 High Limit registers.	S3, S4/5
7	AD9_ERR	RWC	This bit is set when the AD_IN16 voltage has fallen outside the range defined by the AD_IN16 Low Limit and the AD_IN16 High Limit registers.	none

Register 4Bh H_Error Status 4

Register Address	Read/ Write	Register Name	Bit 7	Bit 6	Bit 5	Bit 4	Bit 3	Bit 2	Bit 1	Bit 0	Default Value
4Bh	RWC	H_Error Status 4	D2a_ ERR	D1a_ ERR	RES	$DV_{DD}P$ _ERR	GPI8 _ERR	RES	D2b _ERR	D1b _ERR	00h

Bit	Name	R/W	Description	Sleep Masking
0	D1b_ERR	RWC	Diode Fault Error This bit is set if there is an open or short circuit on the REMOTE1b+ and REMOTE1− pins.	S3*, S4/5*
1	D2b_ERR	RWC	Diode Fault Error This bit is set if there is an open or short circuit on the REMOTE2b+ and REMOTE2− pins.	S3*, S4/5*
2	RES	RWC	RESERVED	S3, S4/5
3	GPI8	RWC	SCSI Fuse Error This bit is set if $\overline{\text{GPI8}}$ has been asserted. Enabled only when VID mode is set to VRD 10.	S3, S4/5
4	$DV_{DD}P$_ERR	RWC	Dynamic Vccp Limit Error. This bit is set if AD_IN7 (P1_Vccp) did not match the requested voltage as reported by P1_VID[7:0].	S3, S4/5
5	RES	RWC	RES	S3, S4/5
6	D1a_ERR	RWC	Diode Fault Error This bit is set if there is an open or short circuit on the REMOTE1a+ and REMOTE1− pins.	S3*, S4/5*
7	D2a_ERR	RWC	Diode Fault Error This bit is set if there is an open or short circuit on the REMOTE2a+ and REMOTE2− pins.	S3*, S4/5*

Register 4Ch $\overline{\text{H_P_PROCHOT}}$ Error Status

Register Address	Read/ Write	Register Name	Bit 7	Bit 6	Bit 5	Bit 4	Bit 3	Bit 2	Bit 1	Bit 0	Default Value
4Ch	RWC	$\overline{\text{H_P_PROCHOT}}$ Error Status	PH_ERR	TMAX	T100	T75	T50	T25	T12	T0	00h

Bit	Name	R/W	Description	Sleep Masking
0	T0	RWC	Set when $\overline{\text{PROCHOT}}$ has had a throttled event. This bit is set for any amount of $\overline{\text{PROCHOT}}$ throttling >0%.	S3, S4/5
1	T12	RWC	Set when $\overline{\text{PROCHOT}}$ has throttled greater than or equal to 0.00% but less than 12.5%.	S3, S4/5
2	T25	RWC	Set when $\overline{\text{PROCHOT}}$ has throttled greater than or equal to 12.5% but less than 25%.	S3, S4/5
3	T50	RWC	Set when $\overline{\text{PROCHOT}}$ has throttled greater than or equal to 25% but less than 50%.	S3, S4/5
4	T75	RWC	Set when $\overline{\text{PROCHOT}}$ has throttled greater than or equal to 50% but less than 75%.	S3, S4/5
5	T100	RWC	Set when $\overline{\text{PROCHOT}}$ has throttled greater than or equal to 75% but less than 100%.	S3, S4/5
6	TMAX	RWC	Set when $\overline{\text{PROCHOT}}$ has throttled 100%.	S3, S4/5
7	PH_ERR	RWC	Set when $\overline{\text{PROCHOT}}$ has throttled more than the user limit.	S3, S4/5

The PH1_ERR bit is the only bit in this register that will set HOST_ ERR in the LM96194 Status/Control register.

Register 4Eh H_GPI Error Status

Register Address	Read/ Write	Register Name	Bit 7	Bit 6	Bit 5	Bit 4	Bit 3	Bit 2	Bit 1	Bit 0	Default Value
4Eh	RWC	H_GPI Error Status	GPI7 _ERR	GPI6 _ERR	GPI5 _ERR	GPI4 _ERR	GPI3 _ERR	GPI2 _ERR	GPI1 _ERR	GPI0 _ERR	00h

Bit	Name	R/W	Description	Sleep Masking
0	GPI0_ERR	RWC	This bit is set whenever GPIO0 is driven low (unless masked via the GPI Error Mask register).	S1*, S3*, S4/5*
1	GPI1_ERR	RWC	This bit is set whenever GPIO1 is driven low (unless masked via the GPI Error Mask register).	S1*, S3*, S4/5*
2	GPI2_ERR	RWC	This bit is set whenever GPIO2 is driven low (unless masked via the GPI Error Mask register).	S1*, S3*, S4/5*
3	GPI3_ERR	RWC	This bit is set whenever GPIO3 is driven low (unless masked via the GPI Error Mask register).	S1*, S3*, S4/5*
4	GPI4_ERR	RWC	This bit is set whenever GPIO4 is driven low (unless masked via the GPI Error Mask register).	S1*, S3*, S4/5*
5	GPI5_ERR	RWC	This bit is set whenever GPIO5 is driven low (unless masked via the GPI Error Mask register).	S1*, S3*, S4/5*
6	GPI6_ERR	RWC	This bit is set whenever GPIO6 is driven low (unless masked via the GPI Error Mask register).	S1*, S3*, S4/5*
7	GPI7_ERR	RWC	This bit is set whenever GPIO7 is driven low (unless masked via the GPI Error Mask register).	S1*, S3*, S4/5*

Register 4Fh H_Fan Error Status

Register Address	Read/ Write	Register Name	Bit 7	Bit 6	Bit 5	Bit 4	Bit 3	Bit 2	Bit 1	Bit 0	Default Value
4Fh	RWC	H_Fan Error Status	RES				FAN4 _ERR	FAN3 _ERR	FAN2 _ERR	FAN1 _ERR	00h

Copyright © 2007–2013, Texas Instruments Incorporated

Bit	Name	R/W	Description	Sleep Masking
0	FAN1_ERR	RWC	This bit is set when the Fan Tach 1 value register is above the value set in the Fan Tach 1 Limit register.	S1*, S3*, S4/5
1	FAN2_ERR	RWC	This bit is set when the Fan Tach 2 value register is above the value set in the Fan Tach 2 Limit register.	S1*, S3*, S4/5
2	FAN3_ERR	RWC	This bit is set when the Fan Tach 3 value register is above the value set in the Fan Tach 3 Limit register.	S1*, S3*, S4/5
3	FAN4_ERR	RWC	This bit is set when the Fan Tach 4 value register is above the value set in the Fan Tach 4 Limit register.	S1*, S3*, S4/5
7:4	RES	R	Reserved	N/A

VALUE REGISTERS

Registers 50–53h Unfiltered Temperature Value Registers

Register Address	Read/ Write	Register Name	Bit 7	Bit 6	Bit 5	Bit 4	Bit 3	Bit 2	Bit 1	Bit 0	Default Value
06h	R	Zone 1b (CPU) Temp	7	6	5	4	3	2	1	0	00h
07h	R	Zone 2b (MMBT3904) Temp	7	6	5	4	3	2	1	0	00h
50h	R	Zone 1a (CPU) Temp	7	6	5	4	3	2	1	0	00h
51h	R	Zone 2a (MMBT3904) Temp	7	6	5	4	3	2	1	0	00h
52h	R	Zone 3 (Internal) Temp	7	6	5	4	3	2	1	0	00h
53h	R/W	Zone 4 (External Digital) Temp	7	6	5	4	3	2	1	0	00h

Zones 1 and 2 are all automatically updated by the LM96194. The Zone 4 (External Digital) Temp registers may be written by an external SMBus device or can be assigned to AD_IN8.

The temperature registers for zones 1 and 2 will return a value of 80h if the remote diode pins are not implemented by the board designer or are not functioning properly.

Registers 54–55h Filtered Temperature Value Registers

Register Address	Read/ Write	Register Name	Bit 7	Bit 6	Bit 5	Bit 4	Bit 3	Bit 2	Bit 1	Bit 0	Default Value
08h	R	Zone 1b (CPU) Filtered Temp	7	6	5	4	3	2	1	0	00h
09h	R	Zone 2b (MMBT3904) Filtered Temp	7	6	5	4	3	2	1	0	00h
54h	R	Zone 1a (CPU) Filtered Temp	7	6	5	4	3	2	1	0	00h

Register Address	Read/ Write	Register Name	Bit 7	Bit 6	Bit 5	Bit 4	Bit 3	Bit 2	Bit 1	Bit 0	Default Value
55h	R	Zone 2a (MMBT3904) Filtered Temp	7	6	5	4	3	2	1	0	00h

These registers reflect the temperature of zones 1 and 2 after the spike smoothing filter has been applied.

The characteristics of the filtering can be adjusted by using the Zones 1/2 Spike Smoothing Control register.

Register 56–65h A/D Channel Voltage Registers

Register Address	Read/ Write	Register Name	Bit 7	Bit 6	Bit 5	Bit 4	Bit 3	Bit 2	Bit 1	Bit 0	Default Value
56h	R	AD_IN1 Voltage	7	6	5	4	3	2	1	0	N/D
57h	R	AD_IN2 Voltage	7	6	5	4	3	2	1	0	N/D
58h	R	AD_IN3 Voltage	7	6	5	4	3	2	1	0	N/D
5Ch	R	AD_IN4 Voltage	7	6	5	4	3	2	1	0	N/D
5Eh	R	AD_IN5 Voltage	7	6	5	4	3	2	1	0	N/D
62h	R	AD_IN6 Voltage	7	6	5	4	3	2	1	0	N/D
63h	R	AD_IN7 Voltage	7	6	5	4	3	2	1	0	N/D
64h	R	AD_IN8 Voltage	7	6	5	4	3	2	1	0	N/D
65h	R	AD_IN9 Voltage	7	6	5	4	3	2	1	0	N/D

The voltage reading registers reflect the current voltage of the LM96194 voltage monitoring inputs. Voltages are presented in the registers at ¾ full scale for the nominal voltage. Therefore, at nominal voltage, each register reads C0h.

Register 67h Current $\overline{\text{PROCHOT}}$

Register Address	Read/ Write	Register Name	Bit 7	Bit 6	Bit 5	Bit 4	Bit 3	Bit 2	Bit 1	Bit 0	Default Value
67h	R	Current $\overline{\text{PROCHOT}}$	7	6	5	4	3	2	1	0	00h

This is the value of the $\overline{\text{PROCHOT}}$ percentage active time for Processor at the end of each $\overline{\text{PROCHOT}}$ monitoring interval as set by the $\overline{\text{PROCHOT}}$ Time Interval register. Writing to this register does not effect the register contents, but does restart the capture cycle for $\overline{\text{PROCHOT}}$. A register value of one represents anything greater than 0% but less than 0.39% of active time.

Register Value (Decimal)	Percentage Active Time
0	0%
1	0.39%
2	0.78%
• • • n	• • • n/256*100

Copyright © 2007–2013, Texas Instruments Incorporated

Register Value (Decimal)	Percentage Active Time
255	99.60%

Register 68h Average $\overline{\text{PROCHOT}}$

Register Address	Read/ Write	Register Name	Bit 7	Bit 6	Bit 5	Bit 4	Bit 3	Bit 2	Bit 1	Bit 0	Default Value
68h	R	Average $\overline{\text{PROCHOT}}$	7	6	5	4	3	2	1	0	00h

This is the average percentage active time of $\overline{\text{PROCHOT}}$. It is the result of adding the contents of this register to the contents of the Current $\overline{\text{PROCHOT}}$ register and dividing the result by 2. The update occurs at the same time that the Current $\overline{\text{PROCHOT}}$ register gets updated. A register value of one represents anything greater than 0% but less than 0.39% of active time.

Register 6Bh Current GPI State

Register Address	Read/ Write	Register Name	Bit 7	Bit 6	Bit 5	Bit 4	Bit 3	Bit 2	Bit 1	Bit 0	Default Value
6Bh	R	GPI State	GPI7	GPI6	GP15	GPI4	GPI3	GPI2	GPI1	GPI0	00h

Bit	Name	Read/Write	Description
0	GPI0	R	1 if GPIO_0 input is LOW, not latched
1	GPI1	R	1 if GPIO_1 input is LOW, not latched
2	GPI2	R	1 if GPIO_2 input is LOW, not latched
3	GPI3	R	1 if GPIO_3 input is LOW, not latched
4	GPI4	R	1 if GPIO_4 input is LOW, not latched
5	GPI5	R	1 if GPIO_5 input is LOW, not latched
6	GPI6	R	1 if GPIO_6 input is LOW, not latched
7	GPI7	R	1 if GPIO_7 input is LOW, not latched

Register 6Ch VID

This register has four possible mappings described in the table. The mapping is determined by the VID mode as selected in the Special Function Control 2 register at address BDh. See the Special Function Control 2 register description for further details.

Register Address	Read/ Write	Register Name	Bit 7	Bit 6	Bit 5	Bit 4	Bit 3	Bit 2	Bit 1	Bit 0	Default Value
6Ch	R	VID	RES (0)		VID[5:0] for VRD 10 mode (functions same as LM93)						00h
			RES (0)	VID[6:0] for VRD 10.2 Extended mode							00h
			RES (0)	VID[6:0] for VRD 11 , Mode 1 (most commonly used mode for VRD11)							00h
			VID[7:1] for VRD 11, Mode 2							RES (0)	00h

Table 5. VRD 10 mode

Bit	Name	Read/Write	Description
5:0	VID[5:0]	R	Processor VID status. Reports the current state of the P1_VID5 through P1_VID0 pins. This register will only be updated if P1_VID signals remain stable for at least 600 ns.
7:6	RES	R	Reserved and will always report 0.

Table 6. VRD 10.2 Extended mode

Bit	Name	Read/Write	Description
6:0	VID[6:0]	R	Processor VID status. Reports the current state of the VID6 through VID0 pins. This register will only be updated if VID signals remain stable for at least 600 ns.
7	RES	R	Reserved and will always report 0.

Table 7. VRD 11 Mode 1

Bit	Name	Read/Write	Description
6:0	VID[6:0]	R	Processor VID status. This mode is the recommended mode for support of VRD11. Reports the current state of the VID6 through VID0 pins. This register will only be updated if VID signals remain stable for at least 600 ns.
7	RES	R	Reserved and will always report 0.

Table 8. VRD 11 Mode 2

Bit	Name	Read/Write	Description
0	RES	R	Reserved and will always report 0.
7:1	VID[7:1]	R	Processor VID status. This mode is supplied for future experimentation and will require additional hardware in order to support both VRD11 and VRD10 specifications. Reports the current state of the VID7 through VID1 pins. This register will only be updated if VID signals remain stable for at least 600 ns.

Register 6E–75h Fan Tachometer Readings

Register Address	Read/ Write	Register Name	Bit 7	Bit 6	Bit 5	Bit 4	Bit 3	Bit 2	Bit 1	Bit 0	Default Value
6Eh	R	Fan Tach 1 LSB	TACH1[5:0]						T1ST[1:0]		00h
6Fh	R	Fan Tach 1 MSB	TACH1[13:6]								00h
70h	R	Fan Tach 2 LSB	TACH2[5:0]						T2ST[1:0]		00h
71h	R	Fan Tach 2 MSB	TACH2[13:6]								00h
72h	R	Fan Tach 3 LSB	TACH3[5:0]						T3ST[1:0]		00h
73h	R	Fan Tach 3 MSB	TACH3[13:6]								00h
74h	R	Fan Tach 4 LSB	TACH4[5:0]						T4ST[1:0]		00h
75h	R	Fan Tach 4 MSB	TACH4[13:6]								00h

The 14-bit fan tach readings indicate the number of 22.5 kHz clock periods that occurred during two full periods of the tachometer input signal. Most fans produce two tachometer pulses per full revolution. These registers must be updated at least once every second.

The fan tachometer reading registers must always return an accurate fan tachometer measurement, even when a fan is disabled or non-functional. 3FFFh indicates that the fan is stalled, not spinning fast enough to measure, or the tachometer input is not connected to a valid signal.

If the pulses per revolution of the fan is known, the RPM can be calculated with the following equation:

RPM= 22500 cycles/sec * 60 sec/min * 2 pulses / COUNT cycles / PULSES_PER_REV

where:

Copyright © 2007–2013, Texas Instruments Incorporated

PULSES_PER_REV = the number of pulses that the fan produces per revolution

COUNT = The 14-bit value read from the tach register

Bit	Name	Read/Write	Description
1:0	T1ST[1:0], T2ST[1:0], T3ST[1:0], T4ST[1:0]	R	Two bits for each tachometer reading that report the state of the fan control circuitry used to acquire a reading. See table below for further clarification.
7:2	TACH1[5:0], TACH2[5:0], TACH3[5:0], TACH4[5:0]	R	Least significant bit field of tachometer reading.
7:0	TACH1[13:6], TACH2[13:6], TACH3[13:6], TACH4[13:6]	R	Most significant bit fielf of tachometer reading.

T1ST[1:0], T2ST[1:0], T3ST[1:0], or T4ST[1:0]	State of Fan Control Circuitry
00	Normal Mode (Smart Tach Mode disabled)
01	Reserved
10	Smart Tach Mode 1, less accurate with most stable Fan RPM
11	Smart Tach Mode 2, most accurate with least stable Fan RPM

LIMIT REGISTERS

Registers 78–7Fh Temperature Limit Registers

Register Address	Read/ Write	Register Name	Bit 7	Bit 6	Bit 5	Bit 4	Bit 3	Bit 2	Bit 1	Bit 0	Default Value
78h	R/W	Processor 1 (Zone1) Low Temp	7	6	5	4	3	2	1	0	80h
79h	R/W	Processor 1 (Zone1) High Temp	7	6	5	4	3	2	1	0	80h
7Ah	R/W	MMBT3904 (Zone2) Low Temp	7	6	5	4	3	2	1	0	80h
7Bh	R/W	MMBT3904 (Zone2) High Temp	7	6	5	4	3	2	1	0	80h
7Ch	R/W	Internal (Zone3) Low Temp	7	6	5	4	3	2	1	0	80h
7Dh	R/W	Internal (Zone3) High Temp	7	6	5	4	3	2	1	0	80h
7Eh	R/W	External Digital (Zone4) Low Temp	7	6	5	4	3	2	1	0	80h

Register Address	Read/ Write	Register Name	Bit 7	Bit 6	Bit 5	Bit 4	Bit 3	Bit 2	Bit 1	Bit 0	Default Value
7Fh	R/W	External Digital (Zone4) High Temp	7	6	5	4	3	2	1	0	80h

If an external temperature input or the internal temperature sensor either exceeds the value set in the high limit register or falls below the value set in the low limit register, the corresponding bit in the B_ and H_Error Status 1 register is set automatically by the LM96194. For example, if the temperature read from the Remote1− and Remote1+ inputs exceeds the Processor (Zone1) High Temp register limit setting, the ZN1_ERR bit in both B_Error Status 1 and H_Error Status 1 registers is set. The temperature limits in these registers is represented as 8 bit, 2's complement, signed numbers in Celsius.

If any high temp limit register is set to 80h then the B_ and H_Error Status register bit for that temperature channel is masked.

Registers 80–83h Fan Boost Temperature Registers

Register Address	Read/ Write	Register Name	Bit 7	Bit 6	Bit 5	Bit 4	Bit 3	Bit 2	Bit 1	Bit 0	Default Value
80h	R/W	Fan Boost Temp Zone 1	7	6	5	4	3	2	1	0	3Ch
81h	R/W	Fan Boost Temp Zone 2	7	6	5	4	3	2	1	0	3Ch
82h	R/W	Fan Boost Temp Zone 3	7	6	5	4	3	2	1	0	23h
83h	R/W	Fan Boost Temp Zone 4	7	6	5	4	3	2	1	0	23h

If any thermal zone exceeds the temperature set in the Fan Boost Limit register, both of the PWM outputs are set to 100%. The fan boost function takes precedence over low-resolution manual override. High-resolution manual overide takes priority over the fan boost function. This is a safety feature that attempts to cool the system if there is a potentially catastrophic thermal event. If set to 7Fh and the fan control temperature resolution is 1°C, the feature is disabled.

Default = 60°C = 3Ch for zones 1 and 2

Default = 35°C = 23h for zones 3 and 4

The temperature has to fall the number of degrees specified in the Fan Boost Hysteresis registers, below this temperature to cause the PWM outputs to return to normal operation. The fan boost function can be disabled by setting the associated register to 80h.

Register 84h Zone1, and Zone2 Hysteresis for Limit Comparisons

Register Address	Read/ Write	Register Name	Bit 7	Bit 6	Bit 5	Bit 4	Bit 3	Bit 2	Bit 1	Bit 0	Default Value
84h	R/W	Limit Comparison Hysteresis (Zones 1/2)	HC2				HC1				00h

Copyright © 2007–2013, Texas Instruments Incorporated

Bit	Name	R/W	Description
3:0	HC1	R/W	Sets the limit comparison hysteresis for zone 1 for both the High and Low limits. The hysteresis can be set from 0°C to 15°C and has 1°C resolution.
7:4	HC2	R/W	Sets the limit comparison hysteresis for zone 2 for both the High and Low limits. The hysteresis can be set from 0°C to 15°C and has 1°C resolution.

Register 85h Zone3 and Zone4 Hysteresis for Limit Comparisons

Register Address	Read/ Write	Register Name	Bit 7	Bit 6	Bit 5	Bit 4	Bit 3	Bit 2	Bit 1	Bit 0	Default Value
85h	R/W	Limit Comparison Hysteresis (Zones 3/4)	HC4				HC3				00h

Bit	Name	R/W	Description
3:0	HC3	R/W	Sets the limit comparison hysteresis for zone 3 for both the High and Low limits. The hysteresis can be set from 0°C to 15°C and has 1°C resolution.
7:4	HC4	R/W	Sets the limit comparison hysteresis for zone 4 for both the High and Low limits.The hysteresis can be set from 0°C to 15°C and has 1°C resolution.

Registers 8E–8Fh Zone 1b and Zone 2b Temperature Reading Adjustment Registers

Register Address	Read/ Write	Register Name	Bit 7	Bit 6	Bit 5	Bit 4	Bit 3	Bit 2	Bit 1	Bit 0	Default Value
8Eh	R/W	Zone 1b Temp Adjust	RES	RES	Z1b_ADJUST[5:0]						00h
8Fh	R/W	Zone 2b Temp Adjust	RES	RES	Z2b_ADJUST[5:0]						00h

Bit	Name	R/W	Description
5:0	Z1b_ADJUST[5:0] or Z2b_ADJUST[5:0]	R/W	6-bit signed 2's complement offset adjustment. This value is added to zone 1b or zone 2b temperature measurements as they are made. All LM96194 registers and functions behave as if the resulting temperature was the true measured temperature. This register allows offset adjustments from +31°C to −32°C in 1°C steps.
7:6	RES	R	Reserved

Registers 90–AFh Voltage Limit Registers

Register Address	Read/ Write	Register Name	Bit 7	Bit 6	Bit 5	Bit 4	Bit 3	Bit 2	Bit 1	Bit 0	Default Value
90h	R/W	AD_IN1 Low Limit	7	6	5	4	3	2	1	0	00h
91h	R/W	AD_IN1 High Limit	7	6	5	4	3	2	1	0	FFh
92h	R/W	AD_IN2 Low Limit	7	6	5	4	3	2	1	0	00h
93h	R/W	AD_IN2 High Limit	7	6	5	4	3	2	1	0	FFh
94h	R/W	AD_IN3 Low Limit	7	6	5	4	3	2	1	0	00h
95h	R/W	AD_IN3 High Limit	7	6	5	4	3	2	1	0	FFh

Copyright © 2007–2013, Texas Instruments Incorporated

Register Address	Read/ Write	Register Name	Bit 7	Bit 6	Bit 5	Bit 4	Bit 3	Bit 2	Bit 1	Bit 0	Default Value
9Ch	R/W	AD_IN4 Low Limit	7	6	5	4	3	2	1	0	00h
9Dh	R/W	AD_IN4 High Limit	7	6	5	4	3	2	1	0	FFh
A0h	R/W	AD_IN5 Low Limit	7	6	5	4	3	2	1	0	00h
A1h	R/W	AD_IN5 High Limit	7	6	5	4	3	2	1	0	FFh
A8h	R/W	AD_IN6 Low Limit	7	6	5	4	3	2	1	0	00h
A9h	R/W	AD_IN6 High Limit	7	6	5	4	3	2	1	0	FFh
AAh	R/W	AD_IN7 Low Limit	7	6	5	4	3	2	1	0	00h
ABh	R/W	AD_IN7 High Limit	7	6	5	4	3	2	1	0	FFh
ACh	R/W	AD_IN8 Low Limit	7	6	5	4	3	2	1	0	00h
ADh	R/W	AD_IN8 High Limit	7	6	5	4	3	2	1	0	FFh
AEh	R/W	AD_IN9 Low Limit	7	6	5	4	3	2	1	0	00h
AFh	R/W	AD_IN9 High Limit	7	6	5	4	3	2	1	0	FFh

FFh as the high limit acts as a mask for that voltage sensor and so prevents this channel from being able to set the associated error status bit in the B_ or H_ Error Status registers, for both high and low limit errors.

If a voltage input either exceeds the value set in the voltage high limit register or falls below the value set in the voltage low limit register, the corresponding bit is set automatically by the LM96194 in the B_ and H_Error Status registers.

Register B0h $\overline{\text{PROCHOT}}$ User Limit Register

Register Address	Read/ Write	Register Name	Bit 7	Bit 6	Bit 5	Bit 4	Bit 3	Bit 2	Bit 1	Bit 0	Default Value
B0h	R/W	$\overline{\text{PROCHOT}}$ User Limit	7	6	5	4	3	2	1	0	FFh

These registers allow a user limit to be set for the $\overline{\text{PROCHOT}}$ monitoring function. If the corresponding Current Px_PROCHOT register exceeds this value, the PH1_ERR or PH2_ERR bit is set in the corresponding Host and BMC error status registers. A value of FFh acts as a mask and prevents the error status bits from being set.

Register Value (Decimal)	Threshold Percentage
0	0%
1	0.39%
2	0.78%
• • • n	• • • n/256*100
255	99.60%

Copyright © 2007–2013, Texas Instruments Incorporated

Register B2h Dynamic Vccp Limit Offset Register

Register Address	Read/ Write	Register Name	Bit 7	Bit 6	Bit 5	Bit 4	Bit 3	Bit 2	Bit 1	Bit 0	Default Value
B2h	R/W	Vccp Limit Offsets	UPPER_OFFSET1				LOWER_OFFSET1				17h

These offsets are used to determine the upper and lower limits of the dynamic Vccp window comparator. These offsets are added or subtracted from the value selected by the VID bits.

LOWER_OFFSET1 or LOWER_OFFSET2	Lower Offset
0h	25 mV
1h	50 mV
2h	75 mV
3h	100 mV
…	…
Ch	325 mV
Dh	350 mV
Eh	375 mV
Fh	400 mV

UPPER_OFFSET1 or UPPER_OFFSET2	Upper Offset
0h	12.5 mV
1h	25 mV
2h	37.5 mV
3h	50 mV
…	…
Dh	175 mV
Eh	187.5 mV
Fh	200 mV

Register B4–BBh Fan Tach Limit Registers

Register Address	Read/ Write	Register Name	Bit 7	Bit 6	Bit 5	Bit 4	Bit 3	Bit 2	Bit 1	Bit 0	Default Value
B4h	R/W	Fan Tach 1 Limit LSB	TLIMIT1[5:0]						RES		FCh
B5h	R/W	Fan Tach 1 Limit MSB	TLIMIT1[13:6]								FFh
B6h	R/W	Fan Tach 2 Limit LSB	TLIMIT2[5:0]						RES		FCh
B7h	R/W	Fan Tach 2 Limit MSB	TLIMIT2[13:6]								FFh
B8h	R/W	Fan Tach 3 Limit LSB	TLIMIT3[5:0]						RES		FCh

Copyright © 2007–2013, Texas Instruments Incorporated

Register Address	Read/ Write	Register Name	Bit 7	Bit 6	Bit 5	Bit 4	Bit 3	Bit 2	Bit 1	Bit 0	Default Value
B9h	R/W	Fan Tach 3 Limit MSB	TLIMIT1[13:6]								FFh
BAh	R/W	Fan Tach 4 Limit LSB	TLIMIT4[5:0]						RES		FCh
BBh	R/W	Fan Tach 4 Limit MSB	TLIMIT4[13:6]								FFh

If a tachometer reading exceeds its limit (as defined by these registers) the corresponding bit is set in the Host and BMC Error Status registers. The fan tachometer readings can be associated with a particular PWM output, but the tach errors are not automatically masked when a PWM is at 0% or set to level that causes the fan RPM to be below the limit purposely. In order to prevent false errors, care needs to be taken to make sure that the Fan Tach Limits are properly set. Errors are never generated for a fan if its limit is set to 3FFFh.

SETUP REGISTERS

Register BCh Special Function Control 1 (Voltage Hysteresis and Fan Control Filter Enable)

Register Address	Read/ Write	Register Name	Bit 7	Bit 6	Bit 5	Bit 4	Bit 3	Bit 2	Bit 1	Bit 0	Default Value
BCh	R/W	Special Function Control 1	RES	FCFE2	FCFE1	LCFE2	LCFE1	VH			00h

Bit	Name	R/W	Description
2:0	VH	R/W	Voltage hysteresis control. This determines the amount of hysteresis to be applied to all voltage limit comparisons. It applies to both high and low limits. One LSB equals one A/D count, so the actual voltage represented by one LSB depends on the voltage channel.
3	LCFE1	R/W	Limit Comparison Filter Enable. Setting this bit causes limit comparisons for temperature zone 1a and 1b to use the filtered (spike smoothed) temperature instead of the unfiltered temperature.
4	LCFE2	R/W	Limit Comparison Filter Enable. Setting this bit causes limit comparisons for temperature zone 2a and 2b to use the filtered (spike smoothed) temperature instead of the unfiltered temperature.
5	FCFE1	R/W	Fan Control Filter Enable. Setting this bit causes fan control functions for zone 1a and 1b (including fan boost) to use the filtered (spike smoothed) temperature instead of the unfiltered temperature. This includes the PI Loop controller, LUT, and temperature fan boost functions.
6	FCFE2	R/W	Fan Control Filter Enable. Setting this bit causes fan control functions for zone 2a and 2b (including fan boost) to use the filtered (spike smoothed) temperature instead of the unfiltered temperature. This includes the PI Loop controller, LUT, and temperature fan boost functions.
7	RES	R	Reserved

In order for the LCFE1, LCFE2, FCFE1 and FCFE2 bits to work correctly, the ZN1E and ZN2E bits in the Zones 1/2 Spike Smoothing Control register (at address C2h) should be cleared.

Application Note: If hysteresis for voltage limit comparisons is non-zero, special care needs to be taken when changing the voltage limit registers while a voltage error condition exists. If software relaxes the voltage limits in an attempt to prevent an error condition, it may be necessary to relax the limits by an amount greater than the hysteresis value and wait several milliseconds before attempting to clear the error status bit for the given voltage channel. Once the error status bit has been cleared, the desired limit(s) can be programmed.

Register BDh Special Function Control 2 (Smart Tach Mode Enable, Fan Control Temperature

Copyright © 2007–2013, Texas Instruments Incorporated

Resolution Control and VID Mode Select)

Register Address	Read/ Write	Register Name	Bit 7	Bit 6	Bit 5	Bit 4	Bit 3	Bit 2	Bit 1	Bit 0	Default Value
BDh	R/W	Special Function Control 2	VID_MODE[1:0]		LT34 _RS	LT12 _RS	STE4	STE3	STE2	STE1	00h

Bit	Name	R/W	Description
0	STE1	R/W	Enable Smart Tach for Tach 1
1	STE2	R/W	Enable Smart Tach for Tach 2
2	STE3	R/W	Enable Smart Tach for Tach 3
3	STE4	R/W	Enable Smart Tach for Tach 4
4	LT12_RS	R/W	When this bit is set, the LUT1 and LUT2 fan controls will use 0.5°C. The resolution of the LUT offsets and hysteresis settings are affected by this bit. These bits apply to the fan control offset registers, fan control hysteresis registers, and boost hysteresis registers.
5	LT34_RS	R/W	When this bit is set, the LUT3 and LUT4 fan controls will use 0.5°C. The resolution of the LUT offsets and hysteresis settings are affected by this bit.
7:6	VID_MODE[1:0]	R/W	These bits select the VID mode which determines how the VID code is handled by the VID value registers and the dynamic Vccp monitoring.
7	RES	R	Reserved

Table 9. VID Mode Select Bit Description

VID_MODE[1:0]	VID Mode	Comments
00	VRD10	Supports the VRD10 specification from Intel and is backwards compatible with the LM93 dynamic Vccp monitoring circuitry. This mode has a voltage range of 0.8375V to 1.600V with 12.5mV resolution and supports 6 VID bits/pins.
01	VRD10.2 Extended	Supports the VRD10.2 Extended specification from Intel. This mode has a voltage range of 0.83125V to 1.600V with 6.25mV resolution and supports 7 VID bits/pins.
10	VRD11 Mode 1	Supports the VRD11 specification from Intel. This mode has a voltage range of 0.83125V to 1.600V with 6.25mV resolution and supports 7 VID bits/pins (VID6-VID0). It assumes VID7 is 0. This is the recommended mode of operation for support of VRD10 and VRD11 without requiring additional hardware.
11	VRD11 Mode 2	Supports the VRD11 specification from Intel. This mode has a voltage range of 0.0375V to 1.600V with 12.5mV resolution and supports 7 VID bits/pins (VID7-VID1). It assumes VID0 is 0. This mode measures voltage levels below 0.83125V for VRD11, but will require additional hardware to simultaneously support VRD10 operation.

Application Note: Enabling Smart Tach mode is not supported while either PWM output is configured for 22.5 kHz. The behavior of the part is undefined if this configuration is programmed. Register E0h Special Function TACH to PWM Binding must be setup when Smart Tach modes are enabled.

Register BEh GPI/VID Level Control

Register Address	Read/ Write	Register Name	Bit 7	Bit 6	Bit 5	Bit 4	Bit 3	Bit 2	Bit 1	Bit 0	Default Value
BEh	R/W	GPI/VID Level Control	GPI7 _LVL	GPI6 _LVL	GPI5 _LVL	GPI4 _LVL	GPI9 _LVL	GPI8 _LVL	RES	P1_VID _LVL	00h

Bit	Name	R/W	Description
0	P1_VID_LVL	R/W	If set, P1_VIDx inputs use alternate lower V_{IH} and V_{IL} levels.
1	RES	R/W	RES
2	GPI8_LVL	R/W	When in VRD10 mode, if set, GPI_8 input uses alternate lower V_{IH} and V_{IL} levels.
3	GPI9_LVL	R/W	When in VRD10 mode, if set, GPI_9 input will use alternate lower V_{IH} and V_{IL} levels.

Copyright © 2007–2013, Texas Instruments Incorporated

Bit	Name	R/W	Description
4	GPI4_LVL	R/W	If set, GPIO4 input will use alternate lower V_{IH} and V_{IL} levels
5	GPI5_LVL	R/W	If set, GPIO5 input will use alternate lower V_{IH} and V_{IL} levels
6	GPI6_LVL	R/W	If set, GPIO6 input will use alternate lower V_{IH} and V_{IL} levels
7	GPI7_LVL	R/W	If set, GPIO7 input will use alternate lower V_{IH} and V_{IL} levels

See the DC Electrical Characteristics for exact V_{IH} and V_{IL} levels.

Register BFh PWM Ramp Control

Register Address	Read/ Write	Register Name	Bit 7	Bit 6	Bit 5	Bit 4	Bit 3	Bit 2	Bit 1	Bit 0	Default Value
BFh	R/W	PWM Ramp Control	PH_RAMP				VRD_RAMP				00h

Bit	Name	R/W	Description
3:0	VRD_RAMP	R/W	Sets the time delay between ramp steps for the $\overline{\text{VRD_HOT}}$ ramp up/ramp down PWM function.
7:4	PH_RAMP	R/W	Sets the time delay between ramp steps for the $\overline{\text{PROCHOT}}$ ramp up/ramp down PWM function.

If the time delay between steps is set to 0 ms, the PWM duty cycle goes immediately to 100% instead of ramping up gradually.

VRD_RAMP or PH_RAMP	Time Delay between Ramp Steps
0h	0 ms
1h	50 ms
2h	100 ms
3h	150 ms
4h	200 ms
5h	250 ms
6h	300 ms
7h	350 ms
8h	400 ms
9h	450 ms
Ah	500 ms
Bh	550 ms
Ch	600 ms
Dh	650 ms
Eh	700 ms
Fh	750 ms

Register C0h Fan Boost Hysteresis (Zones 1/2)

Register Address	Read/ Write	Register Name	Bit 7	Bit 6	Bit 5	Bit 4	Bit 3	Bit 2	Bit 1	Bit 0	Default Value
C0h	R/W	Fan Boost Hysteresis (Zones 1/2)	H2				H1				44h

Copyright © 2007–2013, Texas Instruments Incorporated

Bit	Name	R/W	Description
3:0	H1	R/W	Sets the fan boost hysteresis for Zone 1a and 1b, has 1°C resolution.
7:4	H2	R/W	Sets the fan boost hysteresis for zone 2a and 2b, has 1°C resolution.

If the temperature zone is above fan boost temperature and then drops below the fan boost temperature, the following occurs: the PWM output remains at 100% until the temperature goes a certain amount below the fan boost temperature. These hysteresis registers control this amount and can be set anywhere from 0°C to 15°C (unsigned).

Register C1h Fan Boost Hysteresis (Zones 3/4)

Register Address	Read/ Write	Register Name	Bit 7	Bit 6	Bit 5	Bit 4	Bit 3	Bit 2	Bit 1	Bit 0	Default Value
C1h	R/W	Fan Boost Hysteresis (Zones 3/4)	H4				H3				44h

Bit	Name	R/W	Description
3:0	H3	R/W	Sets the fan boost hysteresis for zone 3 and has 1°C resolution.
7:4	H4	R/W	Sets the fan boost hysteresis for zone 4 and has 1°C resolution.

If the temperature zone is above fan boost temperature and then drops below the fan boost temperature, the following occurs: the PWM output remains at 100% until the temperature goes a certain amount below the fan boost temperature. These hysteresis registers control this amount and can be set anywhere from 0°C to 15°C (unsigned).

Register C2h Zones 1/2 Spike Smoothing Control

Register Address	Read/ Write	Register Name	Bit 7	Bit 6	Bit 5	Bit 4	Bit 3	Bit 2	Bit 1	Bit 0	Default Value
C2h	R/W	Zones 1/2 Spike Smoothing Control	ZN2E	ZN2			ZN1E	ZN1			00h

Bit	Name	R/W	Description
2:0	ZN1	R/W	Configures the spike smoothing characteristics for zone 1a and 1b
3	ZN1E	R/W	When set, the filtered temperature for zone 1a and 1b is used for both limit checking and auto-fan control instead of the unfiltered temperature. Even when this bit is cleared, the filtered temperature can be read by software from the filtered temperature register.
6:4	ZN2	R/W	Configures the spike smoothing characteristics for zone 2a and 2b
7	ZN2E	R/W	When set, the filtered temperature for zone 2a and 2b is used for both limit checking and auto-fan control instead of the unfiltered temperature. Even when this bit is cleared, the filtered temperature can be read by software from the filtered temperature register.

If all the REMOTE1 or REMOTE2 pins are connected to a processor or chipset, instantaneous temperature spikes may be sampled by the LM96194. If these spikes are not ignored, the PWM outputs may cause the fans to turn on prematurely and produce unpleasant noise. Also, false error events may occur. For this reason, any zone that is connected to a chipset or processor may need spike smoothing enabled. The spike smoothing provides additional filtering above and beyond any ΣΔ A/D inherent averaging.

When spike smoothing is enabled, the temperature reading registers still reflect the current value of the temperature—not the filtered value. Only the filtered temperature registers reflect the filtered value.

Copyright © 2007–2013, Texas Instruments Incorporated

ZN1 or ZN2	Spike Smoothed Over
0h	11.8 seconds
1h	7.0 seconds
2h	4.4 seconds
3h	3.0 seconds
4h	1.6 seconds
5h	0.8 seconds
6h	0.6 seconds
7h	0.4 seconds

Register C3h LUT 1/2 MinPWM and Hysteresis

Register Address	Read/ Write	Register Name	Bit 7	Bit 6	Bit 5	Bit 4	Bit 3	Bit 2	Bit 1	Bit 0	Default Value
C3h	R/W	LUT 1/2 MinPWM and Hysteresis	MinPWM12				LUT_FC_TH12				00h

Bit	Name	R/W	Description
3:0	LUT_FC_TH12	R/W	This field sets the amount of hysteresis (in degrees C) that is used by the auto-fan control for LUT 1 and 2. This should be set greater than 0 to avoid unwanted oscillation between two steps in the look-up table. The resolution of this field is controlled by Special Function Control 2 register bit 4.
7:4	MinPWM12	R/W	This field determines the duty cycle that the auto-fan control requests for LUT 1 and 2 if the temperature for the given zone falls below the programmed base temperature for the assigned LUT. This field accepts 16 possible values 13 of which are mapped to duty cycles according the table in the Auto Fan Control section.

Register C4h LUT 3/4 MinPWM and Hysteresis

Register Address	Read/ Write	Register Name	Bit 7	Bit 6	Bit 5	Bit 4	Bit 3	Bit 2	Bit 1	Bit 0	Default Value
C4h	R/W	LUT 3/4 MinPWM and Hysteresis	MinPWM34				LUT_FC_TH34				00h

Bit	Name	R/W	Description
3:0	LUT_FC_TH34	R/W	This field sets the amount of hysteresis (in degrees C) that is used by the auto-fan control for LUT 3 and 4. This should be set greater than 0 to avoid unwanted oscillation between two steps in the look-up table. The resolution of this field is controlled by Special Function Control 2 register bit 5.
7:4	MinPWM34	R/W	This field determines the duty cycle that the auto-fan control requests for LUT 3 and 4 if the temperature for the given zone falls below the programmed base temperature for the assigned LUT. This field accepts 16 possible values 13 of which are mapped to duty cycles according the table in the Auto Fan Control section.

Copyright © 2007–2013, Texas Instruments Incorporated

Register C5h GPO

Register Address	Read/ Write	Register Name	Bit 7	Bit 6	Bit 5	Bit 4	Bit 3	Bit 2	Bit 1	Bit 0	Default Value
C5h	R/W	GPO	GPO7	GPO6	GPO5	GPO4	GPO3	GPO2	GPO1	GPO0	00h

Bit	Name	R/W	Description
0	GPO0	R/W	If set, GPIO_0 will be pulled low. If cleared, the output is not pulled low. This bit should be 0 if GPIO_0 is being used as an input.
1	GPO1	R/W	If set, GPIO_1 will be pulled low. If cleared, the output is not pulled low. This bit should be 0 if GPIO_1 is being used as an input.
2	GPO2	R/W	If set, GPIO_2 will be pulled low. If cleared, the output is not pulled low. This bit should be 0 if GPIO_2 is being used as an input.
3	GPO3	R/W	If set, GPIO_3 will be pulled low. If cleared, the output is not pulled low. This bit should be 0 if GPIO_3 is being used as an input.
4	GPO4	R/W	If set, GPIO_4 will be pulled low. If cleared, the output is not pulled low. This bit should be 0 if GPIO_4 is being used as an input.
5	GPO5	R/W	If set, GPIO_5 will be pulled low. If cleared, the output is not pulled low. This bit should be 0 if GPIO_5 is being used as an input.
6	GPO6	R/W	If set, GPIO_6 will be pulled low. If cleared, the output is not pulled low. This bit should be 0 if GPIO_6 is being used as an input.
7	GPO7	R/W	If set, GPIO_7 will be pulled low. If cleared, the output is not pulled low. This bit should be 0 if GPIO_7 is being used as an input.

Register C6h PROCHOT Control

Register Address	Read/ Write	Register Name	Bit 7	Bit 6	Bit 5	Bit 4	Bit 3	Bit 2	Bit 1	Bit 0	Default Value
C6h	R/W	$\overline{\text{PROCHOT}}$ Override	RES	FORCE_P	RES	VRD_DIS	PHT_DC				00h

Bit	Name	R/W	Description
3:0	PHT_DC	R/W	$\overline{\text{PROCHOT}}$ duty cycle select.
4	P1_VRD1_DIS	R/W	When this bit is set by software, $\overline{\text{PROCHOT}}$ will not be asserted when $\overline{\text{VRD_HOT}}$ is asserted.
5	RES	R/W	RESERVED
6	FORCE_P	R/W	When this is set by software, $\overline{\text{PROCHOT}}$ will be asserted by the LM96194 with the duty cycle selected by PHT_DC.
7	RES	R/W	RESERVED

The period of the PWM signal driven on $\overline{\text{PROCHOT}}$ is 3.56 ms (80 internal 22.5 kHz clocks). The asserted time can be increased in 5 clock increments. 5 clocks is about 220 µs and would represent 6.25% percent throttled.

Possible settings for PHT_DC:

PHT_DC	Asserted Period
0h	5 clocks
1h	10 clocks
2h	15 clocks
3h	20 clocks
4h	25 clocks
5h	30 clocks
6h	35 clocks
7h	40 clocks
8h	45 clocks
9h	50 clocks

Copyright © 2007–2013, Texas Instruments Incorporated

PHT_DC	Asserted Period
Ah	55 clocks
Bh	60 clocks
Ch	65 clocks
Dh	70 clocks
Eh	75 clocks
Fh	80 clocks

Register C7h PROCHOT Time Interval

Register Address	Read/ Write	Register Name	Bit 7	Bit 6	Bit 5	Bit 4	Bit 3	Bit 2	Bit 1	Bit 0	Default Value
C7h	R/W	PROCHOT Time Interval	RES				PH_TI				11h

Bit	Name	R/W	Description
3:0	PH_TI	R/W	Sets the monitoring interval for $\overline{\text{PROCHOT}}$
7:4	RES	R/W	RESERVED

Possible settings for PH_TI:

P1_TI or P2_TI	Monitoring Time Interval (seconds)
0h	0.73
1h	1.46
2h	2.9
3h	5.8
4h	11.7
5h	23.3
6h	46.6
7h	93.2
8h	186
9h	372
Ah–Fh	Reserved

Note that changing this value while $\overline{\text{PROCHOT}}$ measurements are running may cause the monitoring circuit to produce a erroneous value. To avoid alerts and invalid B_P_PROCHOT or H_P_PROCHOT Error Status values, only change this value while the chip is programmed for S3 or S4/5.

Register C8h PWM1 Control 1

Register Address	Read/ Write	Register Name	Bit 7	Bit 6	Bit 5	Bit 4	Bit 3	Bit 2	Bit 1	Bit 0	Default Value
C8h	R/W	PWM1 Control 1	RES	VRD	RES	PH	LUT4	LUT3	LUT2	LUT1	00h

Bit	Name	R/W	Description
0	LUT1	R/W	If set, PWM1 will be bound to LUT 1.
1	LUT2	R/W	If set, PWM1 will be bound to LUT 2.
2	LUT3	R/W	If set, PWM1 will be bound to LUT 3.
3	LUT4	R/W	If set, PWM1 will be bound to LUT 4.
4	PH	R/W	If set, PWM1 will be bound to $\overline{\text{PROCHOT}}$.
5	RES	R/W	RES

Copyright © 2007–2013, Texas Instruments Incorporated

Bit	Name	R/W	Description
6	VRD1	R/W	If set, PWM1 will be bound to $\overline{\text{VRD_HOT}}$.
7	RES	R/W	RES

This register can bind PWM1 to several different control sources. The temperature zones control the PWM duty cycle using the table lookup function. The $\overline{\text{PROCHOT}}$ and $\overline{\text{VRD_HOT}}$ inputs control the PWM using the ramp up/ramp down functions. If multiple control sources are bound to PWM1, the largest duty cycle being requested will be used.

Register C9h PWM1 Control 2

Register Address	Read/ Write	Register Name	Bit 7	Bit 6	Bit 5	Bit 4	Bit 3	Bit 2	Bit 1	Bit 0	Default Value
C9h	R/W	PWM1 Control 2	OVR_DC				PPL	EPPL	INV	OVR	00h

Bit	Name	R/W	Description
0	OVR	R/W	When set, enables manual duty cycle override for PWM1.
1	INV	R/W	Invert PWM1 output. When 0, 100% duty cycle corresponds to the PWM output continuously HIGH. When 1, 100% duty cycle corresponds to the PWM output continuously LOW.
2	EPPL	R/W	Enable PROCHOT PWM1 lock. When set, this bit causes bound PROCHOT events on PWM1 to trigger PPL (bit [3]). When cleared, PPL never gets set.
3	PPL	R/W	PROCHOT PWM1 lock. When set, this bit indicates that PWM1 is currently being held at 100% because a bound PROCHOT event occurred while EPPL (bit [2]) was set. This bit is cleared by writing a zero. Clearing this bit allows the fans to return to normal operation. This bit is not locked by the LOCK bit in the LM96194 Configuration register.
7:4	OVR_DC	R/W	This field sets the duty cycle that will be used by PWM1 whenever manual low resolution override mode is active. This field accepts 16 possible values that are mapped to duty cycles according the table in the FAN CONTROL section. Whenever this register is read, it returns the duty cycle that is currently being used by PWM1 regardless of whether override mode is active or not. The value read may not match the last value written if another control source is requesting a greater duty cycle. This field always returns 0h when the PWM1 spin up cycle is active.

Register CAh PWM1 Control 3

Register Address	Read/ Write	Register Name	Bit 7	Bit 6	Bit 5	Bit 4	Bit 3	Bit 2	Bit 1	Bit 0	Default Value
CAh	R/W	PWM1 Control 3	SU_DUR[2:0]			SU_DUR[3]	SU_DC				00h

Bit	Name	R/W	Description
3:0	SU_DC	R/W	This field sets the duty cycle that will be used whenever PWM1 experiences a Spin-Up cycle. This field accepts 16 possible values that are mapped to duty cycles according the table in the Auto Fan Control section. Setting this field to 0h will effectively disable Spin-Up.
4	SU_DUR[3]	R/W	Most significant bit that sets the Spin-up duration for PWM1.
7:0	SU_DUR[2:0]	R/W	Least significant bits that set the Spin-Up duration for PWM1 least significant bits.

Bits 7:4 configure the spin-up duration. When the duty cycle of PWM1 changes from zero to a non-zero value, the spin-up sequence is activated for the specified amount of time. The available settings are defined according to this table:

Copyright © 2007–2013, Texas Instruments Incorporated

SU_DUR[3] (Bit 4)	SU_DUR[2:0] (Bits[7:5])	Spin-Up Time
0	0h	Spin-up disabled
0	1h	100 ms
0	2h	250 ms
0	3h	400 ms
0	4h	700 ms
0	5h	1s
0	6h	2 s
0	7h	4 s
1	0h	6 s
1	1h	8 s
1	2h	10 s
1	3h	12 s
1	4h	14 s
1	5h	16 s
1	6h	18 s
1	7h	20 s

Register CBh PWM1 Control 4

Register Address	Read/ Write	Register Name	Bit 7	Bit 6	Bit 5	Bit 4	Bit 3	Bit 2	Bit 1	Bit 0	Default Value
CBh	R/W	PWM1 Control 4	RES	RES	RES	RES	HF_LUT _MAP	FREQ1			00h

Bit	Name	R/W	Description
2:0	FREQ1	R/W	PWM1 frequency control. Setting this value controls the frequency of the PWM1 output according to the table below.
3	HF_LUT_MAP	R/W	Selects between two different maps for the PWM duty cycle assignment in the LUT when the PWM frequency is set to 22.5kHz. All 4 LUTs, VRD ramp, PROCHOT ramp, spin-up and low-resolution overide will be affected by this bit. When this bit is set the LUT duty cycle assignment will increment 6.25% steps starting at 25%. When this bit is cleared the duty cycle mapping will match the Low Frequency table. This bit has no effect when the PWM frequency is set to anything other than 22.5kHz and the low PWM frequency mapping will be used.
7:4	RES	R	Reserved

FREQ1	Frequency of PWM1 (Hz)
0h	22500
1h	96
2h	84
3h	72
4h	60
5h	48
6h	36
7h	12

Copyright © 2007–2013, Texas Instruments Incorporated

Table 10. LUT 1-4 Duty Cycle Assignment with PWM Frequency=22.5kHz as Controlled by the HF_LUT_MAP bit.

LUT Duty Cycle Assignments when HF_LUT_MAP='0'			LUT Duty Cycle Assignments when HF_LUT_MAP='1' (Low PWM Frequency Mapping)	
LUT Step	Duty Cycle (%)		LUT Step	Duty Cycle (%)
1	25		1	25
2	31.25		2	28.57
3	37.5		3	32.14
4	43.75		4	35.71
5	50		5	39.29
6	56.25		6	42.86
7	62.25		7	46.43
8	68.75		8	50
9	75		9	53.57
10	81.25		10	57.14
11	87.5		11	71.43
12	93.75		12	85.71
13	100		13	100

Register CCh PWM2 Control 1

Register Address	Read/ Write	Register Name	Bit 7	Bit 6	Bit 5	Bit 4	Bit 3	Bit 2	Bit 1	Bit 0	Default Value
CCh	R/W	PWM2 Control 1	RES	VRD	RES	PH	LUT4	LUT3	LUT2	LUT1	00h

Bit	Name	R/W	Description
0	LUT1	R/W	If set, PWM2 will be bound to LUT 1.
1	LUT2	R/W	If set, PWM2 will be bound to LUT 2.
2	LUT3	R/W	If set, PWM2 will be bound to LUT 3.
3	LUT4	R/W	If set, PWM2 will be bound to LUT 4.
4	PH	R/W	If set, PWM2 will be bound to $\overline{\text{PROCHOT}}$.
5	RES	R/W	RESERVED.
6	VRD	R/W	If set, PWM2 will be bound to $\overline{\text{VRD_HOT}}$.
7	RES	R/W	RESEREVED

This register can bind PWM2 to several different control sources. The temperature zones control the PWM duty cycle using the table lookup function. The Px_$\overline{\text{PROCHOT}}$ and VRDx_$\overline{\text{HOT}}$ inputs control the PWM using the ramp up/ramp down functions. If multiple control sources are bound to PWM2, the largest duty cycle being requested will be used.

Register CDh PWM2 Control 2

Register Address	Read/ Write	Register Name	Bit 7	Bit 6	Bit 5	Bit 4	Bit 3	Bit 2	Bit 1	Bit 0	Default Value
CDh	R/W	PWM2 Control 2	OVR_DC				PPL	EPPL	INV	OVR	00h

Bit	Name	R/W	Description
0	OVR	R/W	When set, enables manual duty cycle override for PWM2.
1	INV	R/W	Invert PWM1 output. When 0, 100% duty cycle corresponds to the PWM output continuously HIGH. When 1, 100% duty cycle corresponds to the PWM output continuously LOW.
2	EPPL	R/W	Enable PROCHOT PWM2 lock. When set, this bit causes bound PROCHOT events on PWM2 to trigger PPL (bit [3]). When cleared, PPL never gets set.
3	PPL	R/W	PROCHOT PWM2 lock. When set, this bit indicates that PWM2 is currently being held at 100% because a bound PROCHOT event occurred while EPPL (bit [2]) was set. This bit is cleared by writing a zero. Clearing this bit allows the fans to return to normal operation. This bit is not locked by the LOCK bit in the LM96194 Configuration register.
7:4	OVR_DC	R/W	This field sets the duty cycle that will be used by PWM2 whenever manual low resolution override mode is active. This field accepts 16 possible values that are mapped to duty cycles according the table in the FAN CONTROL section. Whenever this register is read, it returns the duty cycle that is currently being used by PWM2 regardless of whether override mode is active or not. The value read may not match the last value written if another control source is requesting a greater duty cycle. This field always returns 0h when the PWM2 spin up cycle is active.

Register CEh PWM2 Control 3

Register Address	Read/ Write	Register Name	Bit 7	Bit 6	Bit 5	Bit 4	Bit 3	Bit 2	Bit 1	Bit 0	Default Value
CEh	R/W	PWM2 Control 3	SU_DUR[2:0]			SU_DUR[3]	SU_DC				00h

Bit	Name	R/W	Description
3:0	SU_DC	R/W	This field sets the duty cycle that used whenever PWM2 experiences a Spin-Up cycle. This field accepts 16 possible values that are mapped to duty cycles according the table in the Auto-Fan Control section. Setting this field to 0h effectively disables Spin-Up.
4	SU_DUR[3]	R/W	Most significant bit that sets the spin-up duration for PWM2
7:5	SU_DUR[2:0]	R/W	Least significant bits that set the Spin-Up duration for PWM2.

Bits 7:4 configure the spin-up duration. When the duty cycle of PWM2 changes from zero to a non-zero value, the spin-up sequence is activated for the specified amount of time. The available settings are defined according to this table:

SU_DUR[3] (Bit 4)	SU_DUR[2:0] (Bits[7:5])	Spin-Up Time
0	0h	Spin-up disabled
0	1h	100 ms
0	2h	250 ms
0	3h	400 ms
0	4h	700 ms
0	5h	1s
0	6h	2 s
0	7h	4 s
1	0h	6 s
1	1h	8 s
1	2h	10 s
1	3h	12 s
1	4h	14 s
1	5h	16 s
1	6h	18 s
1	7h	20 s

Copyright © 2007–2013, Texas Instruments Incorporated

Register CFh PWM2 Control 4

Register Address	Read/ Write	Register Name	Bit 7	Bit 6	Bit 5	Bit 4	Bit 3	Bit 2	Bit 1	Bit 0	Default Value
CFh	R/W	PWM2 Control 4	RES	RES	RES	RES	HF_LUT _MAP	FREQ2			00h

Bit	Name	R/W	Description
2:0	FREQ2	R/W	PWM2 frequency control. Controls the frequency of the PWM2 output in the same fashion as FREQ1 in the PWM1 Control 4 register.
3	HF_LUT_MAP	R/W	Selects between two different maps for the PWM duty cycle assignment in the LUT when the PWM frequency is set to 22.5kHz. All 4 LUTs, VRD ramp, PROCHOT ramp, spin-up, and low-resolution override will be affected by this bit. When this bit is cleared the LUT duty cycle assignment will increment 6.25% steps starting at 25%. When this bit is set the duty cycle mapping will match the Low Frequency table. This bit has no effect when the PWM frequency is set to anything other than 22.5kHz and the low PWM frequency mapping will be used.
7:4	RES	R	Reserved

FREQ1	Frequency of PWM1 (Hz)
0h	22500
1h	96
2h	84
3h	72
4h	60
5h	48
6h	36
7h	12

Table 11. LUT 1-4 Duty Cycle Assignment with PWM Frequency=22.5kHz as Controlled by the HF_LUT_MAP bit.

LUT Duty Cycle Assignments when HF_LUT_MAP='0'			LUT Duty Cycle Assignments when HF_LUT_MAP='1' (Low PWM Frequency Mapping)	
LUT Step	Duty Cycle (%)		LUT Step	Duty Cycle (%)
1	25		1	25
2	31.25		2	28.57
3	37.5		3	32.14
4	43.75		4	35.71
5	50		5	39.29
6	56.25		6	42.86
7	62.25		7	46.43
8	68.75		8	50
9	75		9	53.57
10	81.25		10	57.14
11	87.5		11	71.43
12	93.75		12	85.71
13	100		13	100

Register D0h–D3h LUT 1 to 4 Base Temperatures

Register Address	Read/ Write	Register Name	Bit 7	Bit 6	Bit 5	Bit 4	Bit 3	Bit 2	Bit 1	Bit 0	Default Value
D0h	R/W	LUT 1 Base Temperature	7	6	5	4	3	2	1	0	00h
D1h	R/W	LUT 2 Base Temperature	7	6	5	4	3	2	1	0	00h
D2h	R/W	LUT 3 Base Temperature	7	6	5	4	3	2	1	0	00h
D3h	R/W	LUT 4 Base Temperature	7	6	5	4	3	2	1	0	00h

The value in this register is used as the base in the temperature calculation for the auto fan control look-up table. These registers use the standard temperature format (8-bit signed data). The look-up table contains the temperature offsets. The offsets are added to the base temperature to determine the true temperature to be used for each table entry for auto fan control.

Register D4h–DFh Lookup Table Steps—LUT 1/2 and LUT 3/4 Offset Temperature

Register Address	Read/ Write	Register Name	Bit 7	Bit 6	Bit 5	Bit 4	Bit 3	Bit 2	Bit 1	Bit 0	Default Value
D4h	R/W	Step 2 Temp Offset	LUT3/4_STEP2				LUT1/2_STEP2				00h
D5h	R/W	Step 3 Temp Offset	LUT3/4_STEP3				LUT1/2_STEP3				00h
D6h	R/W	Step 4 Temp Offset	LUT3/4_STEP4				LUT1/2_STEP4				00h
D7h	R/W	Step 5 Temp Offset	LUT3/4_STEP5				LUT1/2_STEP5				00h
D8h	R/W	Step 6 Temp Offset	LUT3/4_STEP6				LUT1/2_STEP6				00h
D9h	R/W	Step 7 Temp Offset	LUT3/4_STEP7				LUT1/2_STEP7				00h
DAh	R/W	Step 8 Temp Offset	LUT3/4_STEP8				LUT1/2_STEP8				00h
DBh	R/W	Step 9 Temp Offset	LUT3/4_STEP9				LUT1/2_STEP9				00h
DCh	R/W	Step 10 Temp Offset	LUT3/4_STEP10				LUT1/2_STEP10				00h
DDh	R/W	Step 11 Temp Offset	LUT3/4_STEP11				LUT1/2_STEP11				00h

Copyright © 2007–2013, Texas Instruments Incorporated

Register Address	Read/ Write	Register Name	Bit 7	Bit 6	Bit 5	Bit 4	Bit 3	Bit 2	Bit 1	Bit 0	Default Value
DEh	R/W	Step 12 Temp Offset	LUT3/4_STEP12				LUT1/2_STEP12				00h
DFh	R/W	Step 13 Temp Offset	LUT3/4_STEP13				LUT1/2_STEP13				00h

There are two look up tables of 13 steps (12 offsets), one for LUT 1 and 2 the other for LUT 3 and 4. Each 8-bit offset register contains the offset temperature for LUT 1 and 2 as well as the offset temperature for LUT 3 and 4. The format for the offsets is a 4-bit unsigned value, and one LSB is either 1°C or 0.5°C. The offset resolution is controlled by LT34_RS and LT12_RS bits found in the Special Function Control 2 register (at address BDh). Therefore, the offset range is variable as well and is either 15°C to 0°C or 7.5°C to 0°C.

See the FAN CONTROL section for information on how the base temperature/lookup table should be used for controlling the PWM output(s).

Register E0h Special Function TACH to PWM Binding

Register Address	Read/ Write	Register Name	Bit 7	Bit 6	Bit 5	Bit 4	Bit 3	Bit 2	Bit 1	Bit 0	Default Value
E0h	R/W	Special Function TACH to PWM Binding	T4P2	T4P1	T3P2	T3P1	T2P2	T2P1	T1P2	T1P1	00h

Bit	Name	R/W	Description
0	T1P1	R/W	If set, TACH1 is bound to PWM1.
1	T1P2	R/W	If set, TACH1 is bound to PWM2.
2	T2P1	R/W	If set, TACH2 is bound to PWM1.
3	T2P2	R/W	If set, TACH2 is bound to PWM2.
4	T3P1	R/W	If set, TACH3 is bound to PWM1.
5	T3P2	R/W	If set, TACH3 is bound to PWM2.
6	T4P1	R/W	If set, TACH4 is bound to PWM1.
7	T4P2	R/W	If set, TACH4 is bound to PWM2.

If a TACH channel is bound to a PWM channel, TACH errors on that channel are automatically masked when the bound PWM is at 0% duty cycle or performing spin-up. Behavior is undefined if a TACH channel is bound to both PWM outputs. This register must be setup when Smart Tach Mode is enabled in register BDh, Special Function Control 2, and when Tach Boost is enabled in register E1h, Tachometer Fan Boost Cotrol.

Register E1h Tachometer Fan Boost Control Register

Register Address	Read/ Write	Register Name	Bit 7	Bit 6	Bit 5	Bit 4	Bit 3	Bit 2	Bit 1	Bit 0	Default Value
E1h	R/W	Tach Fan Boost Control	RES	TBS	TBT[5:0]						3Fh

Lock	Bit	Name	R/W	Description
X	5:0	TBT[5:0]]	R/W	TACH error fan boost enable timeout. Set to 63 (3Fh) to disable the TACH error fan boost feature (default). Values other than 63 enable the TACH error fan boost feature and set the timeout according to the following table.
	6	TBS	R/W	TACH boost status: When set, this bit indicates that the TACH error boost has been triggered and is currently requesting 100% PWM. If bits [5:0] are configured for an infinite timeout, and the TACH error(s) have ceased, then writing a zero to this bit will un-trigger the TACH boost. If TACH error boost is disabled, this bit always returns a 0.
	7	RES	R	Reserved

Table 12. Timeout Assignments for TBT[5:0]

TBT[5:0]	Timeout/Function
0	0
1	3
. . .	. . .
N	N * 32 * 0.091 sec
60	175
61	178
62	Infinite setting (software must clear bit 6 of this register to reset)
63	Disabled

Register E2h LM96194 Status Control

Register Address	Read/ Write	Register Name	Bit 7	Bit 6	Bit 5	Bit 4	Bit 3	Bit 2	Bit 1	Bit 0	Default Value
E2h	R/W	LM96194 Status/ Control	BMC _ERR	HOST _ERR	TACH_EDGE		GPI5_A M	GPI4_AM	ASF	OVRID	00h

Lock	Bit	Name	R/W	Description
	0	OVRID	R/W	If this bit is set, all PWM outputs go to 100% duty cycle.
X	1	ASF	R/W	If this bit is set, BMC error registers support ASF, i.e. reset on read. When not in ASF mode, a write “1” is required to clear the bits in the BMC error status registers.
	2	GPI4_AM	R/W	GPI4 Auto Mask Enable If this bit is set, an error event on GPI4 causes all other error events to be masked. The BMC Error Status registers do not reflect any new error events until the GPI4_ERR bit is cleared in the B_GPI Error Status register. The HOST Error Status registers do not reflect any new error events until the GPI4_ERR bit is cleared in the H_GPI Error Status register. If a $\overline{\text{CPU_THERMTRIP}}$ signal is connected to GPIO4, this ensures that unwanted error events do not fire once $\overline{\text{CPU_THERMTRIP}}$ is asserted.
	3	GP15_AM	R/W	GPI5 Auto Mask Enable This bit works exactly the same as GPI4_AM, but applies to GPI5.
	5:4	TACH_EDGE	R/W	This field determines what type of edges are used for measuring fan tach pulses. This effects all four tachometer inputs.
	6	HOST_ERR	R	This bit gets set if any error bit is set in any of the Host Error Status registers (H_).
	7	BMC_ERR	R	This bit gets set if any error bit is set in any of the BMC Error Status registers (B_). When this bit is set, $\overline{\text{ALERT}}$ are asserted if enabled.

Copyright © 2007–2013, Texas Instruments Incorporated

TACH_EDGE	Edge Type Used for Tachometer Measurements
0h	Either rising or falling edges may be used.
1h	Rising edges only
2h	Falling edges only
3h	Reserved

Register E3h LM96194 Configuration

Register Address	Read/ Write	Register Name	Bit 7	Bit 6	Bit 5	Bit 4	Bit 3	Bit 2	Bit 1	Bit 0	Default Value
E3h	R/W	LM96194 Configuration	READY	RES	ALERT_ COMP_EN	RES	ALERT _EN	GMSK	LOCK	START	00h

Lock	Bit	Name	R/W	Description
x	0	START	R/W	When this bit is 0, the LM96194 operates in basic mode. **All** error events are masked. The auto fan control algorithm is disabled. Both PWMs are set to 0%. All monitoring functions are active and the value registers are updated. Once this bit is set, error events are no longer globally masked, and the auto-fan control algorithm is enabled. Fan boost uses the programmed values. It is expected that all limit and setup registers are set by BIOS or application software prior to setting this bit.
X	1	LOCK	R/W	Setting this bit locks all registers and register bits that are indicated as lockable. Lockable registers have an "**x**" in the **Lock** column of their description. This register is locked once it is set. This bit can only be cleared by an external device asserting $\overline{\text{RESET}}$.
	2	GMSK	R/W	Global Mask When this bit is set by software, **all** error events are masked. Setting this bit does not effect any other mask registers or value registers.
	3	ALERT_EN	R/W	When this bit is set, the $\overline{\text{ALERT}}$ output is enabled. If this bit is cleared, the $\overline{\text{ALERT}}$ output is disabled.
	4	RES	R/W	RESERVED. Must be left low for proper operation of $\overline{\text{PROCHOT}}$ circuitry.
	5	ALERT_ COMP_EN	R/W	When this bit is set the ALERT output will function in the thermal comparator mode. In the thermal comparator mode ALERT will be asserted only for unmasked thermal error events. ALERT will be de-assserted immediately when the error event ceases.
	6	RES	R/W	Reserved
	7	READY	R	The LM96194 sets this bit automatically after valid data has been collected for all temperatures and voltages. Software should not use any temperature or voltage values until this bit has been set.

SLEEP STATE CONTROL AND MASK REGISTERS

Register E4h Sleep State Control

Register Address	Read/ Write	Register Name	Bit 7	Bit 6	Bit 5	Bit 4	Bit 3	Bit 2	Bit 1	Bit 0	Default Value
E4h	R/W	Sleep State Control	RES						SB		03h

Bit	Name	R/W	Description
1:0	SB	R/W	Sleep State Control. Setting this field tells the LM96194 which sleep state the system is in. Several error events are masked depending on the state of this field.
7:2	RES	R	Reserved

SB	Description
00	Sleep state = S0 Do not mask errors.
01	Sleep state = S1 Mask errors according to S1 mask registers and standard S1 masking.
10	Sleep state = S3 Mask errors according to S3 mask registers and standard S3 masking.
11	Sleep state = S4/5 Mask errors according to S4/5 mask registers and standard S4/5 masking. This mode is activated automatically if the $\overline{\text{RESET}}$ input is asserted.

Register E5h S1 GPI Mask

Register Address	Read/ Write	Register Name	Bit 7	Bit 6	Bit 5	Bit 4	Bit 3	Bit 2	Bit 1	Bit 0	Default Value
E5h	R/W	S1 GPI Mask	GPI7_S1 _MSK	GPI6_S1 _MSK	GPI5_S1 _MSK	GPI4_S1 _MSK	GPI3_S1 _MSK	GPI2_S1 _MSK	GPI1_S1 _MSK	GPI0_S1 _MSK	FFh

Bit	Name	R/W	Description
0	GPI0_S1_MSK	R/W	If set, GPI0 errors are masked in S1 sleep state.
1	GPI1_S1_MSK	R/W	If set, GPI1 errors are masked in S1 sleep state.
2	GPI2_S1_MSK	R/W	If set, GPI2 errors are masked in S1 sleep state.
3	GPI3_S1_MSK	R/W	If set, GPI3 errors are masked in S1 sleep state.
4	GPI4_S1_MSK	R/W	If set, GPI4 errors are masked in S1 sleep state.
5	GPI5_S1_MSK	R/W	If set, GPI5 errors are masked in S1 sleep state.
6	GPI6_S1_MSK	R/W	If set, GPI6 errors are masked in S1 sleep state.
7	GPI7_S1_MSK	R/W	If set, GPI7 errors are masked in S1 sleep state.

Register E6h S1 Tach Mask

Register Address	Read/ Write	Register Name	Bit 7	Bit 6	Bit 5	Bit 4	Bit 3	Bit 2	Bit 1	Bit 0	Default Value
E6h	R/W	S1 Tach Mask	RES				TACH4_ S1 _MSK	TACH3_ S1 _MSK	TACH2_ S1 _MSK	TACH1_ S1 _MSK	0Fh

Bit	Name	R/W	Description
0	TACH1_S1_MSK	R/W	If set, Tach1 errors are masked in S1 sleep state.
1	TACH2_S1_MSK	R/W	If set, Tach2 errors are masked in S1 sleep state.
2	TACH3_S1_MSK	R/W	If set, Tach3 errors are masked in S1 sleep state.
3	TACH4_S1_MSK	R/W	If set, Tach4 errors are masked in S1 sleep state.
7:4	RES	R	Reserved

Register E7h S3 GPI Mask

Register Address	Read/ Write	Register Name	Bit 7	Bit 6	Bit 5	Bit 4	Bit 3	Bit 2	Bit 1	Bit 0	Default Value
E7h	R/W	S3 GPI Mask	GPI7_S3 _MSK	GPI6_S3 _MSK	GPI5_S3 _MSK	GPI4_S3 _MSK	GPI3_S3 _MSK	GPI2_S3 _MSK	GPI1_S3 _MSK	GPI0_S3 _MSK	FFh

Bit	Name	R/W	Description
0	GPI0_S3_MSK	R/W	If set, GPI0 errors are masked in S3 sleep state.
1	GPI1_S3_MSK	R/W	If set, GPI1 errors are masked in S3 sleep state.
2	GPI2_S3_MSK	R/W	If set, GPI2 errors are masked in S3 sleep state.
3	GPI3_S3_MSK	R/W	If set, GPI3 errors are masked in S3 sleep state.

Copyright © 2007–2013, Texas Instruments Incorporated

Bit	Name	R/W	Description
4	GPI4_S3_MSK	R/W	If set, GPI4 errors are masked in S3 sleep state.
5	GPI5_S3_MSK	R/W	If set, GPI5 errors are masked in S3 sleep state.
6	GPI6_S3_MSK	R/W	If set, GPI6 errors are masked in S3 sleep state.
7	GPI7_S3_MSK	R/W	If set, GPI7 errors are masked in S3 sleep state.

Register E8h S3 Tach Mask

Register Address	Read/ Write	Register Name	Bit 7	Bit 6	Bit 5	Bit 4	Bit 3	Bit 2	Bit 1	Bit 0	Default Value
E8h	R/W	S3 Tach Mask	RES				TACH4_ S3 _MSK	TACH3_ S3 _MSK	TACH2_ S3 _MSK	TACH1_ S3 _MSK	0Fh

Bit	Name	R/W	Description
0	TACH1_S3_MSK	R/W	If set, Tach1 errors are masked in S3 sleep state.
1	TACH2_S3_MSK	R/W	If set, Tach2 errors are masked in S3 sleep state.
2	TACH3_S3_MSK	R/W	If set, Tach3 errors are masked in S3 sleep state.
3	TACH4_S3_MSK	R/W	If set, Tach4 errors are masked in S3 sleep state.
7:4	RES	R	Reserved

Register E9h S3 Temperature/Voltage Mask

Register Address	Read/ Write	Register Name	Bit 7	Bit 6	Bit 5	Bit 4	Bit 3	Bit 2	Bit 1	Bit 0	Default Value
E9h	R/W	S3 Voltage Mask	RES				TEMP_ S3_MSK	AIN14_S 3 _MSK	AIN13_S 3 _MSK	AIN12_S 3 _MSK	07h

Bit	Name	R/W	Description
0	RES	R/W	RESERVED. Leave "HIGH" for proper operation of the part.
1	AIN13_S3_MSK	R/W	If set, AIN13 errors as masked in S3 sleep state.
2	AIN14_S3_MSK	R/W	If set, AIN14 errors as masked in S3 sleep state.
3	TEMP_S3_MSK	R/W	If set, temperature errors and diode fault errors for zones 1 and 2 are masked in S3 sleep state.
7:3	RES	R	Reserved

Register EAh S4/5 GPI Mask

Register Address	Read/ Write	Register Name	Bit 7	Bit 6	Bit 5	Bit 4	Bit 3	Bit 2	Bit 1	Bit 0	Default Value
EAh	R/W	S4/5 GPI Mask	GPI7 _S4/5 _MSK	GPI6 _S4/5 _MSK	GPI5 _S4/5 _MSK	GPI4 _S4/5 _MSK	GPI3 _S4/5 _MSK	GPI2 _S4/5 _MSK	GPI1 _S4/5 _MSK	GPI0 _S4/5 _MSK	FFh

Bit	Name	R/W	Description
0	GPI0_S4/5_MSK	R/W	If set, GPI0 errors are masked in S4/5 sleep state.
1	GPI1_S4/5_MSK	R/W	If set, GPI1 errors are masked in S4/5 sleep state.
2	GPI2_S4/5_MSK	R/W	If set, GPI2 errors are masked in S4/5 sleep state.
3	GPI3_S4/5_MSK	R/W	If set, GPI3 errors are masked in S4/5 sleep state.
4	GPI4_S4/5_MSK	R/W	If set, GPI4 errors are masked in S4/5 sleep state.
5	GPI5_S4/5_MSK	R/W	If set, GPI5 errors are masked in S4/5 sleep state.
6	GPI6_S4/5_MSK	R/W	If set, GPI6 errors are masked in S4/5 sleep state.
7	GPI7_S4/5_MSK	R/W	If set, GPI7 errors are masked in S4/5 sleep state.

Copyright © 2007–2013, Texas Instruments Incorporated

Register EBh S4/5 Temperature/Voltage Mask

Register Address	Read/ Write	Register Name	Bit 7	Bit 6	Bit 5	Bit 4	Bit 3	Bit 2	Bit 1	Bit 0	Default Value
EBh	R/W	S4/5 Voltage Mask	RES				TEMP_ S4/5_MS K	AIN14_S 4/5 _MSK	AIN13_S 4/5 _MSK	AIN12_S 4/5 _MSK	07h

Bit	Name	R/W	Description
0	RES	R/W	RESERVED. Leave "HIGH" for proper operation of the part.
1	AIN13_S4/5_MSK	R/W	If set, AIN13 errors as masked in S4/5 sleep state.
2	AIN14_S4/5_MSK	R/W	If set, AIN14 errors as masked in S4/5 sleep state.
3	TEMP_S4/5_MSK	R/W	If set, temperature errors and diode fault errors for zones 1 and 2 are masked in S4/5 sleep state.
7:3	RES	R	Reserved

OTHER MASK REGISTERS

Register ECh GPI Error Mask

Register Address	Read/ Write	Register Name	Bit 7	Bit 6	Bit 5	Bit 4	Bit 3	Bit 2	Bit 1	Bit 0	Default Value
ECh	R/W	GPI Error Mask	GPI7 _MSK	GPI6 _MSK	GPI5 _MSK	GPI4 _MSK	GPI3 _MSK	GPI2 _MSK	GPI1 _MSK	GPI0 _MSK	FFh

Bit	Name	R/W	Description
0	GPI0_MSK	R/W	When this bit is set, GPI0 error events are masked.
1	GPI1_MSK	R/W	When this bit is set, GPI1 error events are masked.
2	GPI2_MSK	R/W	When this bit is set, GPI2 error events are masked.
3	GPI3_MSK	R/W	When this bit is set, GPI3 error events are masked.
4	GPI4_MSK	R/W	When this bit is set, GPI4 error events are masked.
5	GPI5_MSK	R/W	When this bit is set, GPI5 error events are masked.
6	GPI6_MSK	R/W	When this bit is set, GPI6 error events are masked.
7	GPI7_MSK	R/W	When this bit is set, GPI7 error events are masked.

These bits mask the corresponding bits in the B_ and H_GPI Error Status Registers. They do not effect the GPI State register.

Register EDh Miscellaneous Error Mask

Register Address	Read/ Write	Register Name	Bit 7	Bit 6	Bit 5	Bit 4	Bit 3	Bit 2	Bit 1	Bit 0	Default Value
EDh	R/W	Miscellan eous Error Mask	RES		RES	DVccp _MSK	SCSI1 _MSK	RES	RES	VRD _MSK	3Fh

Bit	Name	R/W	Description
0	VRD_MSK	R/W	When this bit is set, $\overline{\text{VRD_HOT}}$ error events are masked.
1:2	RES	R/W	RESERVED
3	SCSI_MSK	R/W	When this bit is set, $\overline{\text{GPI8}}$ error events are masked.
4	DVccp_MSK	R/W	When this bit is set, dynamic Vccp limit error events for AD_IN7 (CPU1) are masked.
5	RES	R/W	RESERVED. Leave "HIGH" for proper operation of the part.
7:6	RES	R	Reserved

Copyright © 2007–2013, Texas Instruments Incorporated

Register EE and EFh Zone 1a and Zone 2a Adjustment Register

Register Address	Read/ Write	Register Name	Bit 7	Bit 6	Bit 5	Bit 4	Bit 3	Bit 2	Bit 1	Bit 0	Default Value
EEh	R/W	Zone 1a Adjust	RES	RES	Z1a_ADJUST[5:0]						00h
EFh	R/W	Zone 2a Adjust	RES	RES	Z2a_ADJUST[5:0]						00h

Bit	Name	R/W	Description
5:0	Z1a_ADJUST[5:0] or Z2a_ADJUST[5:0]	R/W	6-bit signed 2's complement offset adjustment. This value is added to all zone 1a and 2a temperature measurements as they are made. All LM96194 registers and functions behave as if the resulting temperature was the true measured temperature. This register allows offset adjustments from +31°C to −32°C in 1°C steps. The format is sign two's complement.
7:6	RES	R	Reserved

These devices have limited built-in ESD protection. The leads should be shorted together or the device placed in conductive foam during storage or handling to prevent electrostatic damage to the MOS gates.

Absolute Maximum Ratings (1)(2)(3)

Positive Supply Voltage (V_{DD})	6.0V
Voltage on Any Digital Input or Output Pin	−0.3V to 6.0V
Voltage on +5V Input	−0.3V to +6.667V
Voltage at Positive Remote Diode Inputs, AD_IN1, AD_IN2, AD_IN3, and AD_IN15 Inputs	−0.3V to (V_{DD} + 0.05V)
Voltage at Other Analog Voltage Inputs	−0.3V to +6.0V
Input Current at Thermal Diode Negative Inputs	±1 mA
Input Current at any pin (4)	±10mA
Package Input Current (4)	±100 mA
Maximum Junction Temperature (5) (T_{JMAX})	150 °C
ESD Susceptibility (6)	
Human Body Model	3 kV
Machine Model	300V
Charged Device Model	750V
Storage Temperature	−65°C to +150°C
Soldering process must comply with TI's reflow temperature profile specifications. Refer to www.ti.com/packaging (7)(8)	

(1) Absolute Maximum Ratings indicate limits beyond which damage to the device may occur. Operating Ratings indicate conditions for which the device is functional, but do not ensure specific performance limits. For specified specifications and test conditions, see the Electrical Characteristics. The specified specifications apply only for the test conditions listed. Some performance characteristics may degrade when the device is not operated under the listed test conditions.
(2) All voltages are measured with respect to GND, unless otherwise noted.
(3) If Military/Aerospace specified devices are required, please contact the TI Sales Office/ Distributors for availability and specifications.
(4) When the input voltage (V_{IN}) at any pin exceeds the power supplies (V_{IN} < (GND or AGND) or V_{IN} > V_{DD}, except for analog voltage inputs), the current at that pin should be limited to 10 mA. The 100 mA maximum package input current rating limits the number of pins that can safely exceed the power supplies with an input current of 10 mA to ten. Parasitic components and/or ESD protection circuitry are shown below for the LM96194's pins. Care should be taken not to forward bias the parasitic diode, D1, present on pins D+ and D− as shown in circuits C and D. Doing so by more than 50 mV may corrupt temperature measurements. D1 and the ESD Clamp are connected between V+ (V_{DD}, AD_IN16) and GND as shown in circuit B. SNP stands for snap-back device.
(5) Typical parameters are at T_J = T_A = 25 °C and represent most likely parametric norm.
(6) Human body model, 100 pF discharged through a 1.5 kΩ resistor. Machine model, 200 pF discharged directly into each pin. Charged device model (CDM) simulates a pin slowly acquiring charge (such as from a device sliding down the feeder in an automated assembler) then rapidly being discharged.
(7) See the URL "http://www.ti.com/packaging" for other recommendations and methods of soldering surface mount devices.
(8) Reflow temperature profiles are different for lead-free and non lead-free packages.

Copyright © 2007–2013, Texas Instruments Incorporated

Operating Ratings (1)(2)

	$T_{MIN} \le T_A \le T_{MAX}$
Operating Temperature Range	-40°C ≤ T_A ≤ +85°C
Nominal Supply Voltage	3.3V
Supply Voltage Range (V_{DD})	+3.0V to +3.6V
VID0-VID5	−0.05V to +5.5V
Digital Input Voltage Range	−0.05V to (V_{DD} + 0.05V)
Package Thermal Resistance (3)	79°C/W

(1) Absolute Maximum Ratings indicate limits beyond which damage to the device may occur. Operating Ratings indicate conditions for which the device is functional, but do not ensure specific performance limits. For ensured specifications and test conditions, see the Electrical Characteristics. The specified specifications apply only for the test conditions listed. Some performance characteristics may degrade when the device is not operated under the listed test conditions.
(2) All voltages are measured with respect to GND, unless otherwise noted.
(3) The maximum power dissipation must be de-rated at elevated temperatures and is dictated by T_{JMAX}, θ_{JA} and the ambient temperature, T_A. The maximum allowable power dissipation at any temperature is $P_{D\ MAX} = (T_{JMAX} - T_A) / \theta_{JA}$. The $\theta_{JA}$for the LM96194 when mounted to 1 oz. copper foil PCB the θ_{JA} with different air flow is listed in the following table.

Air Flow	Junction to Ambient Thermal Resistance, θ_{JA}
0 m/s	28 °C/W
1.14 m/s (225 LFPM)	25 °C/W
2.54 m/s (500 LFPM)	22 °C/W

DC Electrical Characteristics

The following limits apply for +3.0 V_{DC} to +3.6 V_{DC}, unless otherwise noted. **Bold face limits apply for $T_A = T_J$ over T_{MIN} to T_{MAX} of the operating range;** all other limits $T_A = T_J$ = 25°C unless otherwise noted. T_A is the ambient temperature of the LM96194; T_J is the junction temperature of the LM96194; T_D is the junction temperature of the thermal diode.

Parameter		Test Conditions	Typical (1)	Limits (2)	Units (Limits)
POWER SUPPLY CHARACTERISTICS					
	Power Supply Current	Converting, Interface and Fans Inactive, Peak Current	2	**2.75**	mA (max)
		Converting, Interface and Fans Inactive, Average Current	1.6		mA
	Power-On Reset Threshold Voltage		2	**1.6**	V (min)
				2.7	V (max)
TEMPERATURE-TO-DIGITAL CONVERTER CHARACTERISTICS					
	Local Temperature Accuracy Over Full Range	-40°C ≤ T_A < 0°C	±2	**±4**	°C (max)
		0°C ≤ T_A ≤ 85°C	±2	**±3**	°C (max)
		T_A = +55°C	±1	**±2.5**	°C (max)
	Local Temperature Resolution		1		°C
	Remote Thermal Diode Temperature Accuracy(3)	0°C ≤ T_A ≤ 85°C and 0°C ≤ T_D ≤ 100°C		**±3**	°C (max)
		0°C ≤ T_A ≤ 85°C and T_D =70°C		**±2.5**	°C (max)
	Remote Thermal Diode Temperature Accuracy Extended to Down to -40 for MMBT3904 Only	-40°C ≤ T_A < 0°C and -40°C ≤ T_D < 0°C		**±4**	°C (max)
	Remote Thermal Diode Temperature Accuracy; targeted for a typical Pentium processor on 90nm or 65nm process (3)	0°C ≤ T_A ≤ 85°C and 25°C ≤ T_D ≤ 70°C	±1		°C

(1) Typical parameters are at $T_J = T_A$ = 25 °C and represent most likely parametric norm.
(2) Limits are specified to AOQL (Average Outgoing Quality Level).
(3) At the time of first pubication of this specification (Jan 2006), this specification applies to either Pentium or Xeon Processors on 90nm or 65nm process when TruTherm is selected. When TruTherm is deselected this specification applies to an MMBT3904. This specification does include the error caused by the variability of the diode ideality and series resistance parameters.

Copyright © 2007–2013, Texas Instruments Incorporated

DC Electrical Characteristics (continued)

The following limits apply for +3.0 V_{DC} to +3.6 V_{DC}, unless otherwise noted. **Bold face limits apply for $T_A = T_J$ over T_{MIN} to T_{MAX} of the operating range;** all other limits $T_A = T_J = 25°C$ unless otherwise noted. T_A is the ambient temperature of the LM96194; T_J is the junction temperature of the LM96194; T_D is the junction temperature of the thermal diode.

Parameter		Test Conditions	Typical (1)	Limits (2)	Units (Limits)
	Remote Temperature Resolution		1		°C
	Thermal Diode Source Current	High Level	172	**230**	µA (max)
		Low Level	10.75		µA
	Thermal Diode Current Ratio		16		
T_C	Total Monitoring Cycle Time			**100**	ms (max)
ANALOG-TO-DIGITAL VOLTAGE MEASUREMENT CONVERTER CHARACTERISTICS					
TUE	Total Unadjusted Error (4)			**±2**	% of FS (max)
DNL	Differential Non-Linearity		±1		LSB
PSS	Power Supply (V_{DD}) Sensitivity		±1		%/V (of FS)
T_C	Total Monitoring Cycle Time (5)			**100**	ms (max)
	Input Resistance for Inputs with Dividers		200	**140**	kΩ (min)
	AD_IN1- AD_IN3 and AD_IN8 Analog Input Leakage Current (No Dividers are present on these inputs.) (6)			60	nA (max)
DIGITAL OUTPUTS: PWM1, PWM2					
I_{OL}	Maximum Current Sink			**8**	mA (min)
V_{OL}	Output Low Voltage	I_{OUT} = 8.0 mA		**0.4**	V (max)
DIGITAL OUTPUTS: ALL					
V_{OL}	Output Low Voltage (Note excessive current flow causes self-heating and degrades the internal temperature accuracy.)	I_{OUT} = 4.0 mA		**0.4**	V (min)
		I_{OUT} = 6 mA		**0.55**	V (min)
I_{OH}	High Level Output Leakage Current	$V_{OUT} = V_{DD}$	0.1	**10**	µA (max)
I_{OTMAX}	Maximum Total Sink Current for all Digital Outputs Combined			**32**	mA (max)
C_O	Digital Output Capacitance		20		pF
DIGITAL INPUTS: ALL					
V_{IH}	Input High Voltage Except Address Select			**2.1**	V (min)
V_{IL}	Input Low Voltage Except Address Select			**0.8**	V (max)
V_{IH}	Input High Voltage for Address Select			**90% V_{DD}**	V (min)
V_{IM}	Input Mid Voltage for Address Select			**43% V_{DD}** **57% V_{DD}**	V (min) V (max)
V_{IL}	Input Low Voltage for Address Select			**10% V_{DD}**	V (max)
V_{HYST}	DC Hysteresis		0.3		V
I_{IH}	Input High Current(7)	$V_{IN} = V_{DD}$		**−10**	µA (min)
I_{IL}	Input Low Current(7)	V_{IN} = 0V		**10**	µA (max)
C_{IN}	Digital Input Capacitance		20		pF
DIGITAL INPUTS: P1_VIDx, P2_VIDx, GPI_9, GPI_8, GPIO_7, GPIO_6, GPIO_5, GPIO_4 (When respective bit set in Register BEh GPI/VID Level Control)					
V_{IH}	Alternate Input High Voltage (AGTL+ Compatible)			**0.8**	V (min)
V_{IL}	Alternate Input Low Voltage (AGTL+ Compatible)			**0.4**	V (max)

(4) Total Monitoring Cycle Time includes all temperature and voltage conversions.
(5) TUE (Total Unadjusted Error) includes Offset, Gain and Linearity errors of the ADC.
(6) Leakage current approximately doubles every 20 °C.
(7) A total digital I/O current of 40 mA can cause 6 mV of offset in Vref.

Copyright © 2007–2013, Texas Instruments Incorporated

AC Electrical Characteristics

The following limits apply for +3.0 V_{DC} to +3.6 V_{DC}, unless otherwise noted. **Bold face limits apply for $T_A = T_J = T_{MIN}$ to T_{MAX} of the operating range;** all other limits $T_A = T_J = 25°C$ unless otherwise noted.

Parameter		Test Conditions	Typical (1)	Limits (2)	Units (Limits)
FAN RPM-TO-DIGITAL CHARACTERISTICS					
	Counter Resolution		14		bits
	Number of fan tach pulses count is based on		2		pulses
	Counter Frequency		22.5		kHz
	Accuracy			**±6**	% (max)
PWM OUTPUT CHARACTERISTICS					
	Frequency Tolerances			**±6**	% (max)
	Duty-Cycle Tolerance		±2	**±6**	% (max)
RESET INPUT/OUTPUT CHARACTERISTICS					
	Output Pulse Width Upon Power Up			**250** **330**	ms (min) ms (max)
	Minimum Input Pulse Width			**10**	µs (min)
	Reset Output Fall Time	1.6V to 0.4V Logic Levels		**1**	µs (max)
SMBus TIMING CHARACTERISTICS					
f_{SMBCLK}	SMBCLK (Clock) Clock Frequency			**10** **100**	kHz (min) kHz (max)
t_{BUF}	SMBus Free Time between Stop and Start Conditions			**4.7**	µs (min)
$t_{HD;STA}$	Hold time after (Repeated) Start Condition. After this period, the first clock is generated.			**4.0**	µs (min)
$t_{SU;STA}$	Repeated Start Condition Setup Time			**4.7**	µs (min)
$t_{SU;STO}$	Stop Condition Setup Time			**4.0**	µs (min)
$t_{SU;DAT}$	Data Input Setup Time to SMBCLK High			**250**	ns (min)
$t_{HD;DAT}$	Data Output Hold Time after SMBCLK Low			**300** **1075**	ns (min) ns (max)
t_{LOW}	SMBCLK Low Period			**4.7** **50**	µs (min) µs (max)
t_{HIGH}	SMBCLK High Period			**4.0** **50**	µs (min) µs (max)
t_R	Rise Time (3)			**1**	µs (max)
t_F	Fall Time (3)			**300**	ns (max)
$t_{TIMEOUT}$	Timeout SMBDAT or SMBCLK low time required to reset the Serial Bus Interface to the Idle State		31	**25** **35**	ms ms (min) ms (max)
t_{POR}	Time in which a device must be operational after power-on reset	V_{DD} > +2.8V		**500**	ms (max)
C_L	Capacitance Load on SMBCLK and SMBDAT			**400**	pF (max)

(1) Typical parameters are at $T_J = T_A = 25$ °C and represent most likely parametric norm.
(2) Limits are specified to AOQL (Average Outgoing Quality Level).
(3) Timing specifications are tested at the TTL logic levels, $V_{IL} = 0.4V$ for a falling edge and $V_{IH} = 2.4V$ for a rising edge. TRI-STATE output voltage is forced to 1.4V.

Copyright © 2007–2013, Texas Instruments Incorporated

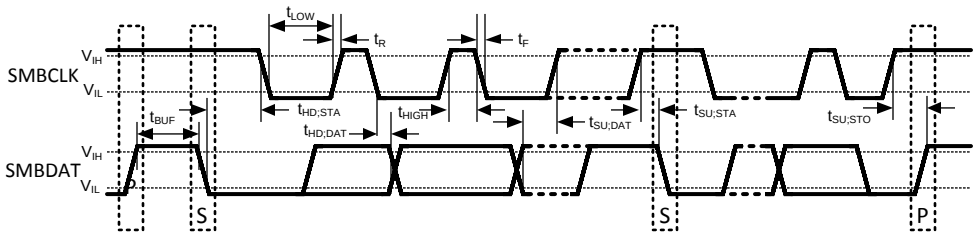

Symbol	Pin #	Circuit	All Input Circuits
$\overline{\text{PROCHOT}}$	1	A	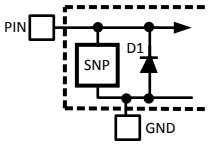 Circuit A
GND	2	A	
GND	3	A	
GND	4	A	
GND	5	A	
GND	6	A	
GPIO_0/TACH1	7	A	
GPIO_1/TACH2	8	A	
GPIO_2/TACH3	9	A	
GPIO_3/TACH4	10	A	
GPIO_4 /$\overline{\text{THERMTRIP}}$	11	A	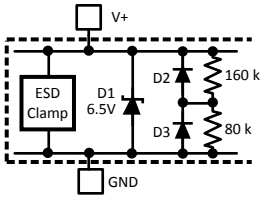 Circuit B
GPIO_5	12	A	
GPIO_6	13	A	
GPIO_7	14	A	
$\overline{\text{VRD_HOT}}$	15	A	
GND	16	A	
$\overline{\text{SCSI_TERM1}}$	17	A	
SMBDAT	18	A	
SMBCLK	19	A	
$\overline{\text{ALERT}}$/XtestOut	20	A	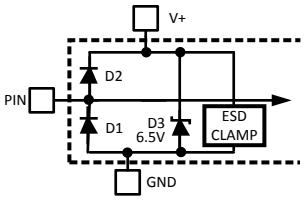 Circuit C
$\overline{\text{RESET}}$	21	A	
AGND	22	B (Internally shorted to GND pin.)	
REMOTE1–	23	C	
REMOTE1+	24	D	
REMOTE2–	25	C	
REMOTE+	26	D	
AD_IN1	27	D	
AD_IN2	28	D	
AD_IN3	29	D	

Symbol	Pin #	Circuit	All Input Circuits
AD_IN4	30	E	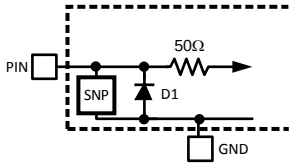 Circuit D
AD_IN5	31	E	
GND	32	E	
GND	33	E	
GND	34	E	
AD_IN6	35	E	
AD_IN7	36	E	
AD_IN8	37	D	
ADDR_SEL	38	A	
AD_IN9/V_{DD} (V+)	39	B	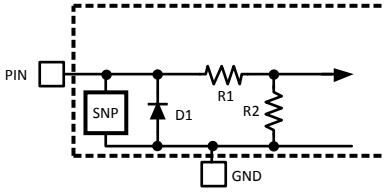 Circuit E
GND	40	B (Internally shorted to AGND.)	
PWM1	41	A	
PWM2	42	A	
P1_VID0	43	A	
P1_VID1	44	A	
P1_VID2	45	A	
P1_VID3	46	A	
P1_VID4	47	A	
P1_VID5	48	A	

Copyright © 2007–2013, Texas Instruments Incorporated

REVISION HISTORY

Changes from Revision A (March 2013) to Revision B	Page
• Changed layout of National Data Sheet to TI format	95

PACKAGING INFORMATION

Orderable part number	Status (1)	Material type (2)	Package | Pins	Package qty | Carrier	RoHS (3)	Lead finish/ Ball material (4)	MSL rating/ Peak reflow (5)	Op temp (°C)	Part marking (6)
LM96194CISQ/NOPB	Obsolete	Production	WQFN (RHS) | 48	-	-	Call TI	Call TI	-40 to 100	LM96194
LM96194CISQX/NOPB	Active	Production	WQFN (RHS) | 48	2500 | LARGE T&R	Yes	SN	Level-2-260C-1 YEAR	-40 to 100	LM96194
LM96194CISQX/NOPB.A	Active	Production	WQFN (RHS) | 48	2500 | LARGE T&R	Yes	SN	Level-2-260C-1 YEAR	-40 to 100	LM96194

(1) **Status:** For more details on status, see our product life cycle.

(2) **Material type:** When designated, preproduction parts are prototypes/experimental devices, and are not yet approved or released for full production. Testing and final process, including without limitation quality assurance, reliability performance testing, and/or process qualification, may not yet be complete, and this item is subject to further changes or possible discontinuation. If available for ordering, purchases will be subject to an additional waiver at checkout, and are intended for early internal evaluation purposes only. These items are sold without warranties of any kind.

(3) **RoHS values:** Yes, No, RoHS Exempt. See the TI RoHS Statement for additional information and value definition.

(4) **Lead finish/Ball material:** Parts may have multiple material finish options. Finish options are separated by a vertical ruled line. Lead finish/Ball material values may wrap to two lines if the finish value exceeds the maximum column width.

(5) **MSL rating/Peak reflow:** The moisture sensitivity level ratings and peak solder (reflow) temperatures. In the event that a part has multiple moisture sensitivity ratings, only the lowest level per JEDEC standards is shown. Refer to the shipping label for the actual reflow temperature that will be used to mount the part to the printed circuit board.

(6) **Part marking:** There may be an additional marking, which relates to the logo, the lot trace code information, or the environmental category of the part.

Multiple part markings will be inside parentheses. Only one part marking contained in parentheses and separated by a "~" will appear on a part. If a line is indented then it is a continuation of the previous line and the two combined represent the entire part marking for that device.

Important Information and Disclaimer: The information provided on this page represents TI's knowledge and belief as of the date that it is provided. TI bases its knowledge and belief on information provided by third parties, and makes no representation or warranty as to the accuracy of such information. Efforts are underway to better integrate information from third parties. TI has taken and continues to take reasonable steps to provide representative and accurate information but may not have conducted destructive testing or chemical analysis on incoming materials and chemicals. TI and TI suppliers consider certain information to be proprietary, and thus CAS numbers and other limited information may not be available for release.

In no event shall TI's liability arising out of such information exceed the total purchase price of the TI part(s) at issue in this document sold by TI to Customer on an annual basis.

TAPE AND REEL INFORMATION

REEL DIMENSIONS

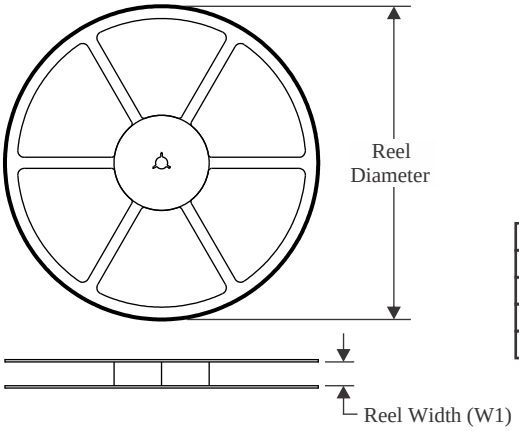

TAPE DIMENSIONS

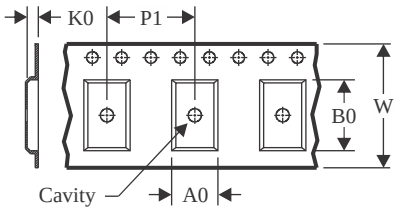

A0	Dimension designed to accommodate the component width
B0	Dimension designed to accommodate the component length
K0	Dimension designed to accommodate the component thickness
W	Overall width of the carrier tape
P1	Pitch between successive cavity centers

QUADRANT ASSIGNMENTS FOR PIN 1 ORIENTATION IN TAPE

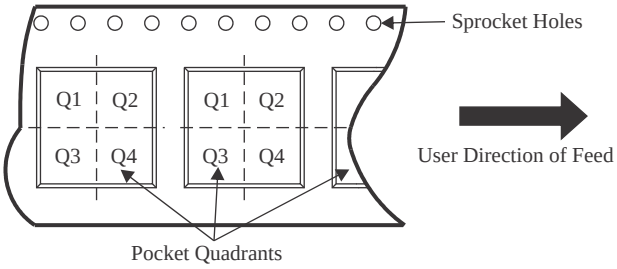

*All dimensions are nominal

Device	Package Type	Package Drawing	Pins	SPQ	Reel Diameter (mm)	Reel Width W1 (mm)	A0 (mm)	B0 (mm)	K0 (mm)	P1 (mm)	W (mm)	Pin1 Quadrant
LM96194CISQX/NOPB	WQFN	RHS	48	2500	330.0	16.4	7.3	7.3	1.3	12.0	16.0	Q1

TAPE AND REEL BOX DIMENSIONS

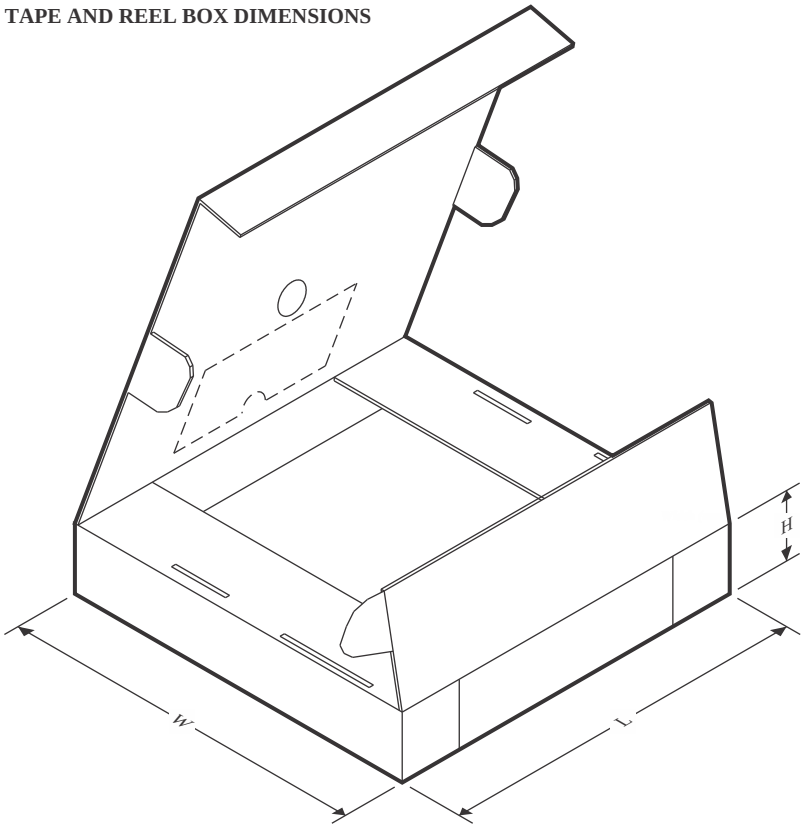

*All dimensions are nominal

Device	Package Type	Package Drawing	Pins	SPQ	Length (mm)	Width (mm)	Height (mm)
LM96194CISQX/NOPB	WQFN	RHS	48	2500	356.0	356.0	36.0

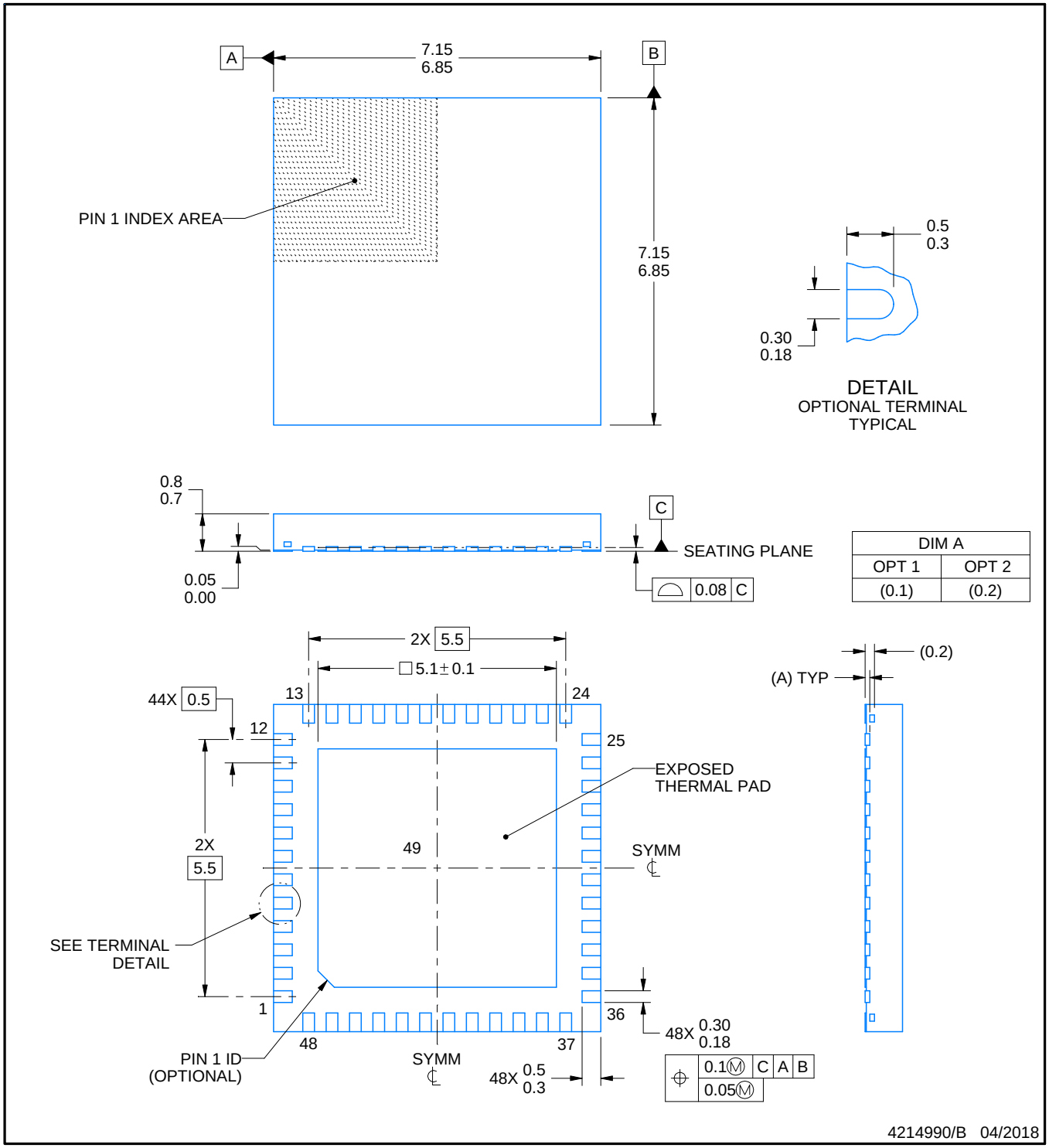

NOTES:

1. All linear dimensions are in millimeters. Any dimensions in parenthesis are for reference only. Dimensioning and tolerancing per ASME Y14.5M.
2. This drawing is subject to change without notice.
3. The package thermal pad must be soldered to the printed circuit board for thermal and mechanical performance.

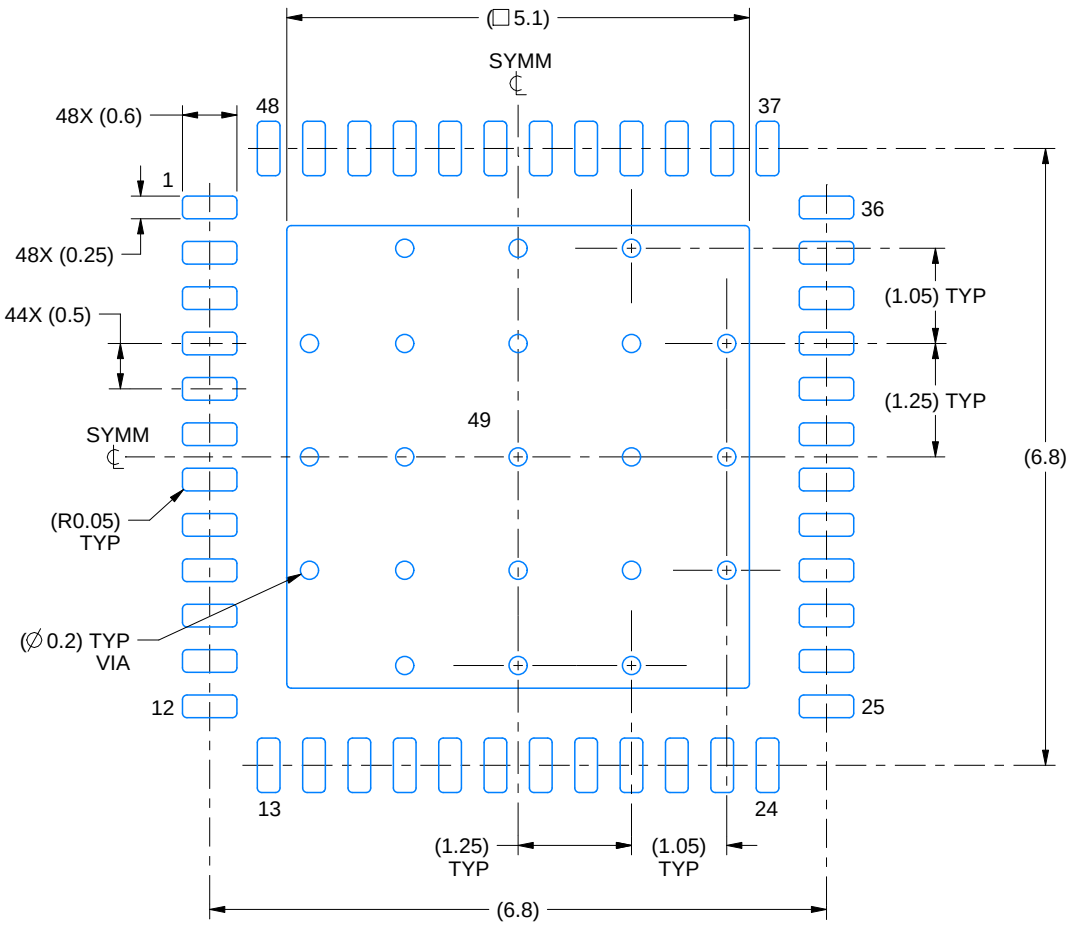

LAND PATTERN EXAMPLE
EXPOSED METAL SHOWN
SCALE:12X

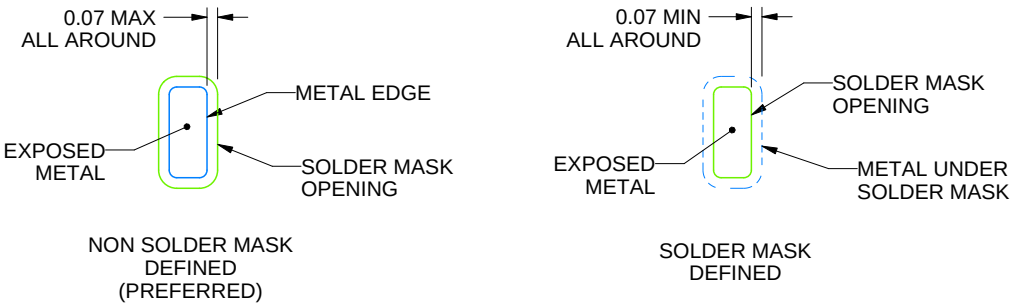

SOLDER MASK DETAILS

4214990/B 04/2018

NOTES: (continued)

4. This package is designed to be soldered to a thermal pad on the board. For more information, see Texas Instruments literature number SLUA271 (www.ti.com/lit/slua271).
5. Vias are optional depending on application, refer to device data sheet. If any vias are implemented, refer to their locations shown on this view. It is recommended that vias under paste be filled, plugged or tented.

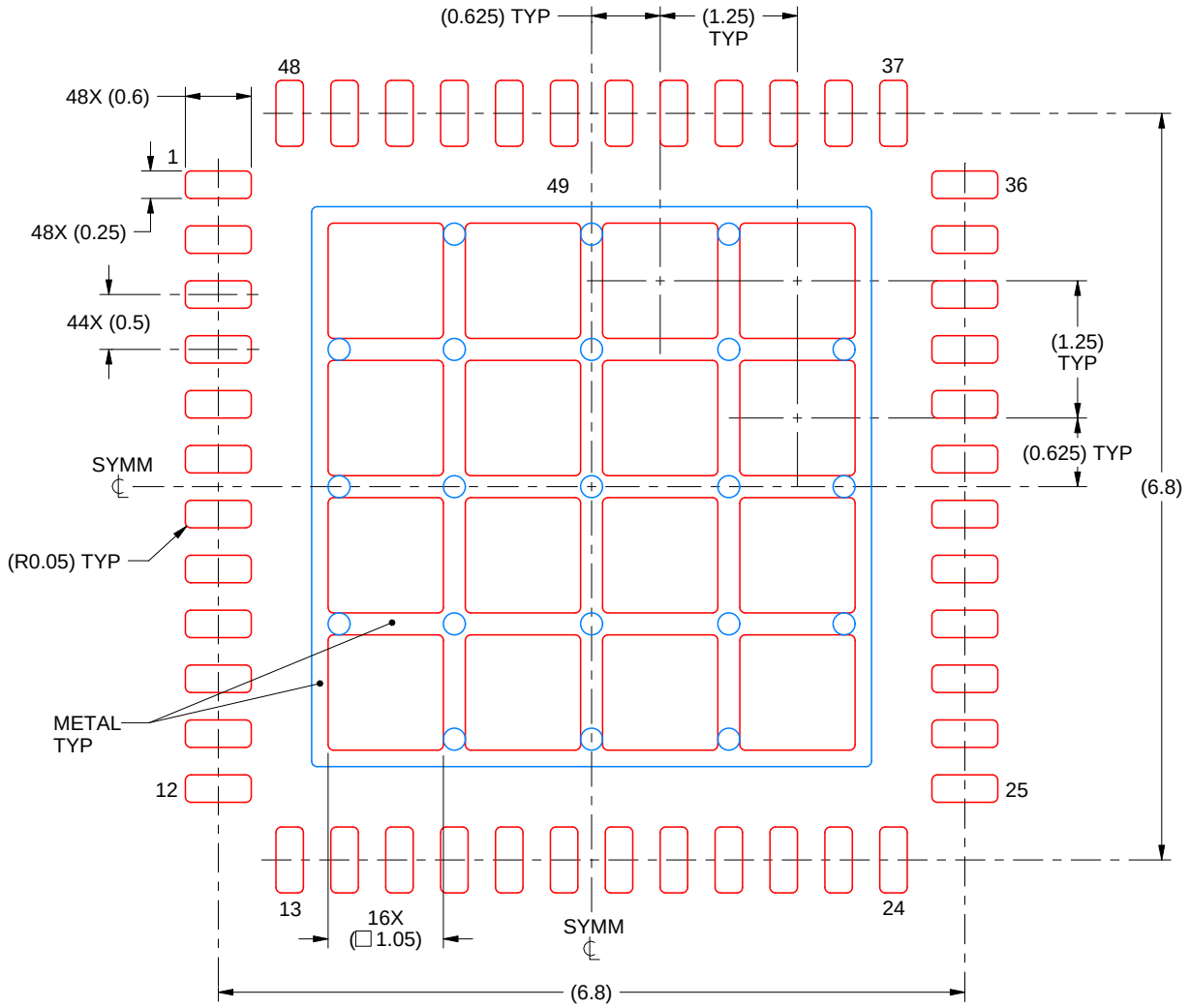

SOLDER PASTE EXAMPLE
BASED ON 0.125 mm THICK STENCIL

EXPOSED PAD 49
68% PRINTED SOLDER COVERAGE BY AREA UNDER PACKAGE
SCALE:15X

4214990/B 04/2018

NOTES: (continued)

6. Laser cutting apertures with trapezoidal walls and rounded corners may offer better paste release. IPC-7525 may have alternate design recommendations.

IMPORTANT NOTICE AND DISCLAIMER

TI PROVIDES TECHNICAL AND RELIABILITY DATA (INCLUDING DATASHEETS), DESIGN RESOURCES (INCLUDING REFERENCE DESIGNS), APPLICATION OR OTHER DESIGN ADVICE, WEB TOOLS, SAFETY INFORMATION, AND OTHER RESOURCES “AS IS” AND WITH ALL FAULTS, AND DISCLAIMS ALL WARRANTIES, EXPRESS AND IMPLIED, INCLUDING WITHOUT LIMITATION ANY IMPLIED WARRANTIES OF MERCHANTABILITY, FITNESS FOR A PARTICULAR PURPOSE OR NON-INFRINGEMENT OF THIRD PARTY INTELLECTUAL PROPERTY RIGHTS.

These resources are intended for skilled developers designing with TI products. You are solely responsible for (1) selecting the appropriate TI products for your application, (2) designing, validating and testing your application, and (3) ensuring your application meets applicable standards, and any other safety, security, regulatory or other requirements.

These resources are subject to change without notice. TI grants you permission to use these resources only for development of an application that uses the TI products described in the resource. Other reproduction and display of these resources is prohibited. No license is granted to any other TI intellectual property right or to any third party intellectual property right. TI disclaims responsibility for, and you fully indemnify TI and its representatives against any claims, damages, costs, losses, and liabilities arising out of your use of these resources.

TI’s products are provided subject to TI’s Terms of Sale, TI’s General Quality Guidelines, or other applicable terms available either on ti.com or provided in conjunction with such TI products. TI’s provision of these resources does not expand or otherwise alter TI’s applicable warranties or warranty disclaimers for TI products. Unless TI explicitly designates a product as custom or customer-specified, TI products are standard, catalog, general purpose devices.

TI objects to and rejects any additional or different terms you may propose.

Copyright © 2026, Texas Instruments Incorporated

Last updated 10/2025