LMC608x Precision CMOS Dual Operational Amplifiers

1 Features

- (Typical values unless otherwise stated)
- Low offset voltage: 150µV
- Single-supply operation: 4.5V to 15.5V
- Ultra-low input bias current: 10fA
- Output swing to within 20mV of supply rail, 2kΩ load
- Input common-mode range includes V–
- High-voltage gain: 123dB, 2kΩ load
- Improved latch-up immunity

2 Applications

- Instrumentation amplifier
- Photodiode and infrared detector preamplifier
- Transducer amplifier
- Medical instrumentation
- Digital-to-analog converter (DAC)
- Charge amplifier for piezoelectric transducer

3 Description

The LMC6081, LMC6082, and LMC6084 (LMC608x) are precision, low-offset-voltage operational amplifiers (op amps), capable of single supply operation. Performance characteristics include ultra low input bias current, high voltage gain, rail-to-rail output swing, and an input common-mode voltage range that includes ground. These features, plus the low offset voltage, make the LMC608x an excellent choice for precision circuit applications.

Other applications using the LMC608x include precision full-wave rectifiers, integrators, references, and sample-and-hold circuits.

For designs with more critical power demands, see the LMC6062 precision, dual, micropower operational amplifier.

Device Information

PART NUMBER	CHANNEL COUNT	PACKAGE(1)
LMC6081	Single	D (SOIC, 8)
LMC6082	Dual	D (SOIC, 8)
LMC6084	Quad	D (SOIC, 14)

(1) For more information, see Section 9.

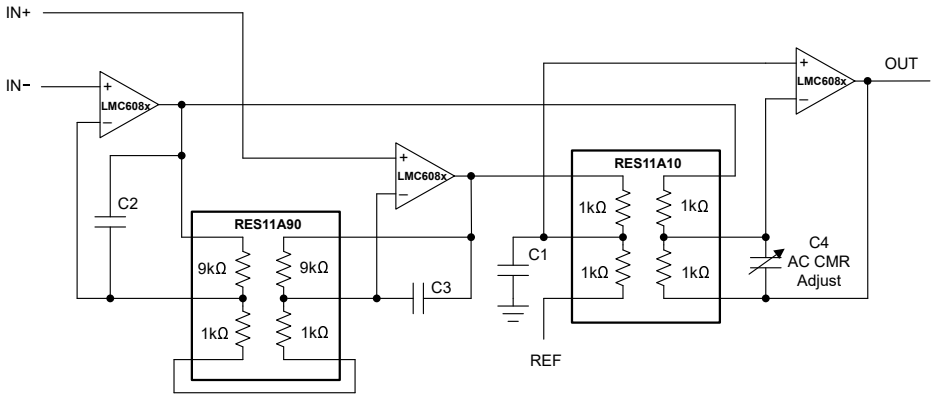

Instrumentation Amplifier With RES11A

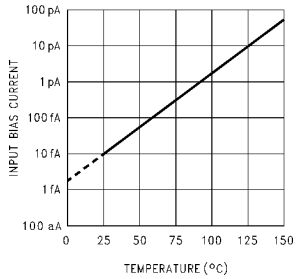

Input Bias Current vs Temperature

An IMPORTANT NOTICE at the end of this data sheet addresses availability, warranty, changes, use in safety-critical applications, intellectual property matters and other important disclaimers. PRODUCTION DATA.

Table of Contents

1 Features....1
2 Applications....1
3 Description....1
4 Pin Configuration and Functions....3
5 Specifications....5
5.1 Absolute Maximum Ratings....5
5.2 ESD Ratings....5
5.3 Recommended Operating Conditions....5
5.4 Thermal Information LMC6081....6
5.5 Thermal Information LMC6082....6
5.6 Thermal Information LMC6084....6
5.7 Electrical Characteristics....7
5.8 Typical Characteristics....11
6 Application and Implementation....15
6.1 Application Information....15
6.2 Typical Applications....17
6.3 Layout....19
7 Device and Documentation Support....21
7.1 Receiving Notification of Documentation Updates....21
7.2 Support Resources....21
7.3 Trademarks....21
7.4 Electrostatic Discharge Caution....21
7.5 Glossary....21
8 Revision History....21
9 Mechanical, Packaging, and Orderable Information....22

Copyright © 2024 Texas Instruments Incorporated

4 Pin Configuration and Functions

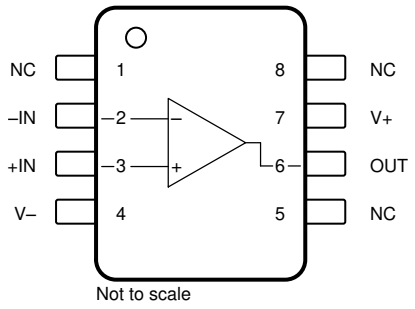

Figure 4-1. LMC6081 D Package, 8-Pin SOIC, and P Package, 8-Pin PDIP

Table 4-1. Pin Functions: LMC6081

PIN		TYPE(1)	DESCRIPTION
NAME	NO.		
+IN	3	Input	Noninverting input
–IN	2	Input	Inverting input
NC	1, 5, 8	—	No internal connection (can be left floating)
OUT	6	Output	Output
V+	7	Power	Positive (highest) power supply
V–	4	Power	Negative (lowest) power supply

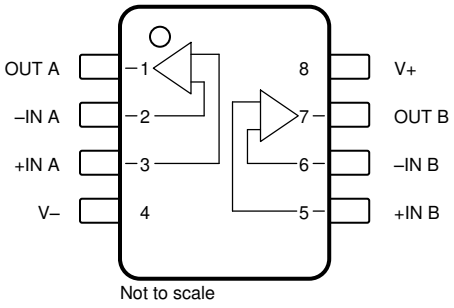

Figure 4-2. LMC6082 D Package, 8-Pin SOIC, and P Package, 8-Pin PDIP

Table 4-2. Pin Functions: LMC6081

PIN		TYPE(1)	DESCRIPTION
NAME	NO.		
+IN A	3	Input	Noninverting input, channel A
–IN A	2	Input	Inverting input, channel A
+IN B	5	Input	Noninverting input, channel B
–IN B	6	Input	Inverting input, channel B
OUT A	1	Output	Output, channel A
OUT B	7	Output	Output, channel B
V+	8	Power	Positive (highest) power supply
V–	4	Power	Negative (lowest) power supply

Copyright © 2024 Texas Instruments Incorporated

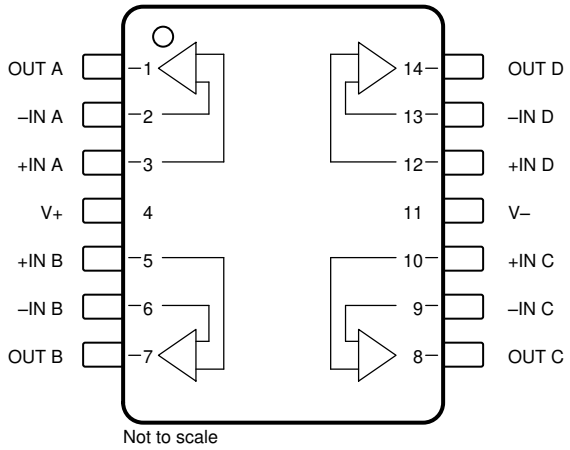

Figure 4-3. LMC6084 D Package, 8-Pin SOIC, and P Package, 8-Pin PDIP

Table 4-3. Pin Functions: LMC6084

PIN		TYPE(1)	DESCRIPTION
NAME	NO.		
+IN A	3	Input	Noninverting input, channel A
+IN B	5	Input	Noninverting input, channel B
+IN C	10	Input	Noninverting input, channel C
+IN D	12	Input	Noninverting input, channel D
–IN A	2	Input	Inverting input, channel A
–IN B	6	Input	Inverting input, channel B
–IN C	9	Input	Inverting input, channel C
–IN D	13	Input	Inverting input, channel D
OUT A	1	Output	Output, channel A
OUT B	7	Output	Output, channel B
OUT C	8	Output	Output, channel C
OUT D	14	Output	Output, channel D
V+	4	Power	Positive (highest) power supply
V–	11	Power	Negative (lowest) power supply

Copyright © 2024 Texas Instruments Incorporated

5 Specifications

5.1 Absolute Maximum Ratings

over operating free-air temperature range (unless otherwise noted)(1) (2)

		MIN	MAX	UNIT
Differential input voltage range			±Supply voltage	V
Supply voltage, V_S = (V+) – (V–)	Single supply	0	16	V
	Dual supply		±8	
Output short circuit	To V+		See(3)	mA
	To V–		See(4)	
Signal input pins	Voltage	(V–) – 0.3	(V+) + 0.3	V
	Current		±10	mA
Output pin current			±30	mA
Power supply pin current			40	mA
Temperature	Junction, T_J		150	°C
	Storage, T_{stg}	–65	150	
Power dissipation			See(5)	W

(1) Stresses beyond those listed under *Absolute Maximum Ratings* may cause permanent damage to the device. These are stress ratings only, which do not imply functional operation of the device at these or any other conditions beyond those indicated under *Recommended Operating Conditions*. Exposure to absolute-maximum-rated conditions for extended periods may affect device reliability.
(2) If Military/Aerospace specified devices are required, please contact the TI Sales Office/Distributors for availability and specifications.
(3) Do not connect output to V+, when V+ is greater than 13V or reliability is adversely affected.
(4) Applies to both single-supply and split-supply operation. Continuous short circuit operation at elevated ambient temperature can result in exceeding the maximum allowed junction temperature of 150°C. Output currents in excess of ±30mA over long term may adversely affect reliability.
(5) The maximum power dissipation is a function of $T_{J(Max)}$, θ_{JA}, and T_A. The maximum allowable power dissipation at any ambient temperature is $P_D = (T_{J(Max)} - T_A) / \theta_{JA}$.

5.2 ESD Ratings

			VALUE	UNIT
$V_{(ESD)}$	Electrostatic discharge	Human-body model (HBM), per ANSI/ESDA/JEDEC JS-001(1)	±2000	V

(1) JEDEC document JEP155 states that 500V HBM allows safe manufacturing with a standard ESD control process.

5.3 Recommended Operating Conditions

over operating free-air temperature range (unless otherwise noted)

		MIN	NOM	MAX	UNIT
Supply voltage, V_S = (V+) – (V–)	Single supply	4.5		15.5	V
	Dual supply	±2.25		±7.75	
Temperature range, T_J		–40		85	°C
Power dissipation				See(1)	

(1) For operating at elevated temperatures, the device must be derated based on the thermal resistance θ_{JA} with $P_D = (T_J - T_A) / \theta_{JA}$. All numbers apply for packages soldered directly into a printed circuit board.

Copyright © 2024 Texas Instruments Incorporated

5.4 Thermal Information LMC6081

THERMAL METRIC[1]		LMC6081		UNIT
		D (SOIC)	P (PDIP)	
		8 PINS	8 PINS	
$R_{\theta JA}$	Junction-to-ambient thermal resistance	193	115	°C/W

(1) For more information about traditional and new thermal metrics, see the *Semiconductor and IC Package Thermal Metrics* application report.

5.5 Thermal Information LMC6082

THERMAL METRIC[1]		LMC6082		UNIT
		D (SOIC)	P (PDIP)	
		8 PINS	8 PINS	
$R_{\theta JA}$	Junction-to-ambient thermal resistance	193	115	°C/W

(1) For more information about traditional and new thermal metrics, see the *Semiconductor and IC Package Thermal Metrics* application report.

5.6 Thermal Information LMC6084

THERMAL METRIC[1]		LMC6084		UNIT
		D (SOIC)	P(PDIP)	
		14 PINS	14 PINS	
$R_{\theta JA}$	Junction-to-ambient thermal resistance	126	81	°C/W

(1) For more information about traditional and new thermal metrics, see the *Semiconductor and IC Package Thermal Metrics* application report.

Copyright © 2024 Texas Instruments Incorporated

5.7 Electrical Characteristics

at T_A = 25°C, V_S = 5V (V– = 0V), V_{CM} = 1.5V, V_{OUT} = V_S / 2, and R_L = 1MΩ connected to V_S / 2 (unless otherwise noted)

PARAMETER		TEST CONDITIONS		MIN	TYP	MAX	UNIT
OFFSET VOLTAGE							
V_{OS}	Input offset voltage	LMC608xAI			±150	±350	µV
			T_A = –40°C to +85°C			±800	
		LMC608xI			±150	±800	
			T_A = –40°C to +85°C			±1300	
dV_{OS}/dT	Input offset voltage drift	T_A = –40°C to +85°C			1		µV/°C
PSRR	Power-supply rejection ratio	Positive 5V ≤ V_{CM} ≤ 15V	LMC608xAI	75	85		dB
			LMC608xAI T_A = –40°C to +85°C	72			
			LMC608xI	66	85		
			LMC608xI T_A = –40°C to +85°C	63			
		Negative –10V ≤ V_{CM} ≤ 0V	LMC608xAI	84	94		
			LMC608xAI T_A = –40°C to +85°C	81			
			LMC608xI	74	94		
			LMC608xI T_A = –40°C to +85°C	71			
INPUT BIAS CURRENT							
I_B	Input bias current				±10		fA
		T_A = –40°C to +85°C				±4	pA
I_{OS}	Input offset current				±5		fA
		T_A = –40°C to +85°C				±2	pA
NOISE							
e_n	Input voltage noise density	f = 1kHz			22		nV/√Hz
i_n	Input current noise density	f = 1kHz			4		fA/√Hz
THD	Total harmonic distortion	f= 10kHz, G = – 10V/V, R_L = 2kΩ, V_{OUT} = 8V_{pp}, V_S = ±5V			0.2		%
INPUT VOLTAGE							
V_{CM}	Common-mode voltage range	To positive rail 5V ≤ V_S ≤ 15V, CMRR > 60dB			(V+) – 1.9	(V+) – 2.3	V
			T_A = –40°C to +85°C			(V+) – 2.5	
		To negative rail 5V ≤ V_S ≤ 15V, CMRR > 60dB		(V–) – 0.1	(V–) – 0.4		
			T_A = –40°C to +85°C	(V–)			
CMRR	Common-mode rejection ratio	V_S = 15V, 0V < V_{CM} < 12V	LMC608xAI	75	85		dB
			LMC608xAI, T_A = –40°C to +85°C	72			
			LMC608xI	66	85		
			LMC608xI, T_A = –40°C to +85°C	63			
INPUT IMPEDANCE							
R_{IN}	Input resistance				10		TΩ

Copyright © 2024 Texas Instruments Incorporated

5.7 Electrical Characteristics (continued)

at T_A = 25°C, V_S = 5V (V– = 0V), V_{CM} = 1.5V, V_{OUT} = V_S / 2, and R_L = 1MΩ connected to V_S / 2 (unless otherwise noted)

PARAMETER		TEST CONDITIONS		MIN	TYP	MAX	UNIT
OPEN-LOOP GAIN							
A_{OL}	Open-loop voltage gain	Sourcing, V_S = 15V, V_{CM} = 7.5V, 7.5V < V_O < 11.5V, R_L = 2kΩ	LMC608xAI	400	1400		V/mV
			LMC608xAI, T_A = –40°C to +85°C	300			
			LMC608xI	300	1400		
			LMC608xI, T_A = –40°C to +85°C	200			
		Sinking, V_S = 15V, V_{CM} = 7.5V, 2.5V < V_O < 7.5V, R_L = 2kΩ	LMC608xAI	180	350		
			LMC608xAI, T_A = –40°C to +85°C	100			
			LMC608xI	90	350		
			LMC608xI, T_A = –40°C to +85°C	60			
		Sourcing, V_S = 15V, V_{CM} = 7.5V, 7.5V < V_O < 11.5V, R_L = 600Ω	LMC608xAI	400	1200		
			LMC608xAI, T_A = –40°C to +85°C	150			
			LMC608xI	200	1200		
			LMC608xI, T_A = –40°C to +85°C	80			
		Sinking, V_S = 15V, V_{CM} = 7.5V, 2.5V < V_O < 7.5V, R_L = 600Ω	LMC608xAI	100	150		
			LMC608xAI, T_A = –40°C to +85°C	50			
			LMC608xI	70	150		
			LMC608xI, T_A = –40°C to +85°C	35			
FREQUENCY RESPONSE							
GBW	Gain bandwidth product				1.3		MHz
SR	Slew rate[2]	V_S = 15V, 10V step		0.8	1.5		V/µs
			T_A = –40°C to +85°C	0.6			
θ_m	Phase margin				50		°
	Crosstalk	Dual and quad channel, V_S = 15V, R_L = 100kΩ to 7.5V, f = 1kHz, V_{OUT} = 12V_{pp}			140		dB

Copyright © 2024 Texas Instruments Incorporated

5.7 Electrical Characteristics (continued)

at T_A = 25°C, V_S = 5V (V– = 0V), V_{CM} = 1.5V, V_{OUT} = V_S / 2, and R_L = 1MΩ connected to V_S / 2 (unless otherwise noted)

PARAMETER		TEST CONDITIONS		MIN	TYP	MAX	UNIT
OUTPUT							
V_O	Voltage output swing	Positive rail V_S = 5V, R_L = 2kΩ	LMC608xAI	4.80	4.87		V
			LMC608xAI, T_A = –40°C to +85°C	4.73			
			LMC608xI	4.75	4.87		
			LMC608xI, T_A = –40°C to +85°C	4.67			
		Negative rail V_S = 5V, R_L = 2kΩ	LMC608xAI		0.10	0.13	
			LMC608xAI, T_A = –40°C to +85°C			0.17	
			LMC608xI		0.10	0.20	
			LMC608xI, T_A = –40°C to +85°C			0.24	
		Positive rail V_S = 5V, R_L = 600Ω	LMC608xAI	4.50	4.61		
			LMC608xAI, T_A = –40°C to +85°C	4.31			
			LMC608xI	4.50	4.61		
			LMC608xI, T_A = –40°C to +85°C	4.21			
		Negative rail V_S = 5V, R_L = 600Ω	LMC608xAI		0.30	0.40	
			LMC608xAI, T_A = –40°C to +85°C			0.50	
			LMC608xI		0.30	0.50	
			LMC608xI, T_A = –40°C to +85°C			0.63	
		Positive rail V_S = 15V, R_L = 2kΩ	LMC608xAI	14.50	14.63		
			LMC608xAI, T_A = –40°C to +85°C	14.34			
			LMC608xI	14.37	14.63		
			LMC608xI, T_A = –40°C to +85°C	14.25			
		Negative rail V_S = 15V, R_L = 2kΩ	LMC608xAI		0.26	0.35	
			LMC608xAI, T_A = –40°C to +85°C			0.45	
			LMC608xI		0.26	0.44	
			LMC608xI, T_A = –40°C to +85°C			0.56	
		Positive rail V_S = 15V, R_L = 600Ω	LMC608xAI	13.35	13.90		
			LMC608xAI, T_A = –40°C to +85°C	12.86			
			LMC608xI	14.37	13.90		
			LMC608xI, T_A = –40°C to +85°C	14.25			
		Negative rail V_S = 15V, R_L = 600Ω	LMC608xAI		0.79	1.16	
			LMC608xAI, T_A = –40°C to +85°C			1.32	
			LMC608xI		0.79	1.33	
			LMC608xI, T_A = –40°C to +85°C			1.58	

Copyright © 2024 Texas Instruments Incorporated

5.7 Electrical Characteristics (continued)

at T_A = 25°C, V_S = 5V (V– = 0V), V_{CM} = 1.5V, V_{OUT} = V_S / 2, and R_L = 1MΩ connected to V_S / 2 (unless otherwise noted)

PARAMETER		TEST CONDITIONS		MIN	TYP	MAX	UNIT
I_{SC}	Short-circuit current	Sourcing V_S = 5V, V_{OUT} = 0V	LMC608xAI	16	22		mA
			LMC608xAI, T_A = –40°C to +85°C	10			
			LMC608xI	13	22		
			LMC608xI, T_A = –40°C to +85°C	8			
		Sinking V_S = 5V, V_{OUT} = 5V	LMC608xAI	16	21		
			LMC608xAI, T_A = –40°C to +85°C	13			
			LMC608xI	13	21		
			LMC608xI, T_A = –40°C to +85°C	10			
		Sourcing V_S = 15V, V_{OUT} = 0V	LMC608xAI	28	30		
			LMC608xAI, T_A = –40°C to +85°C	22			
			LMC608xI	23	30		
			LMC608xI, T_A = –40°C to +85°C	18			
		Sinking V_S = 15V, V_{OUT} = 13V(1)	LMC608xAI	28	34		
			LMC608xAI, T_A = –40°C to +85°C	22			
			LMC608xI	23	34		
			LMC608xI, T_A = –40°C to +85°C	18			
POWER SUPPLY							
I_Q	Quiescent current per amplifier	V_{OUT} = 1.5V, V_S = 5V			0.45	0.75	mA
			T_A = –40°C to +85°C			0.9	
		V_{OUT} = 7.5V, V_S = 15V LMC6082, LMC6084			0.55	0.85	
			T_A = –40°C to +85°C			1	
		V_{OUT} = 7.5V, V_S = 15V LMC6081			0.55	0.85	
			T_A = –40°C to +85°C			0.95	

(1) Do not connect output to V+, when V+ is greater than 13V or reliability is adversely affected.
(2) Specification limit established from device population bench system measurements across multiple lots. Number specified is the slower of the positive and negative slew rates.

Copyright © 2024 Texas Instruments Incorporated

5.8 Typical Characteristics

at T_A = 25°C, V_S = ±7.5V, V_{OUT} = mid-supply, and R_L≥ 1MΩ (unless otherwise specified)

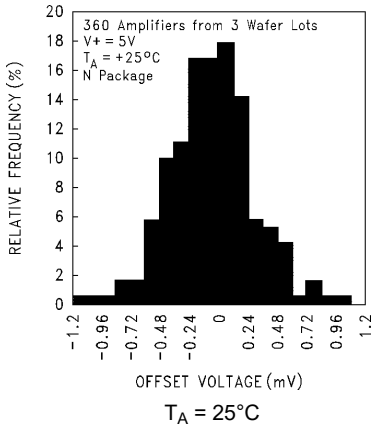

Figure 5-1. Distribution of LMC6082 Input Offset Voltage

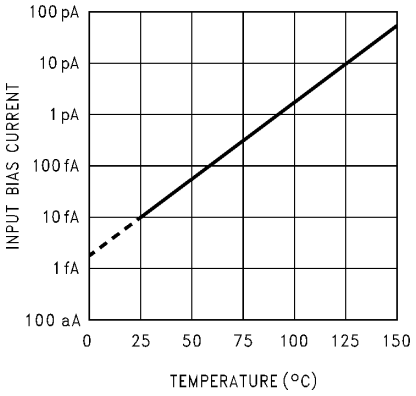

Figure 5-2. Input Bias Current vs Temperature

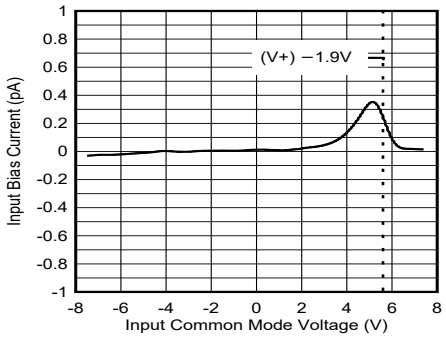

Figure 5-3. Input Bias Current vs Common-Mode Voltage

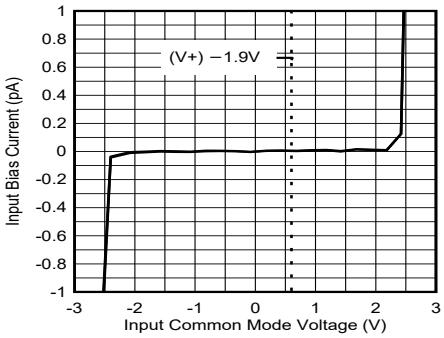

Figure 5-4. Input Bias Current vs Common-Mode Voltage

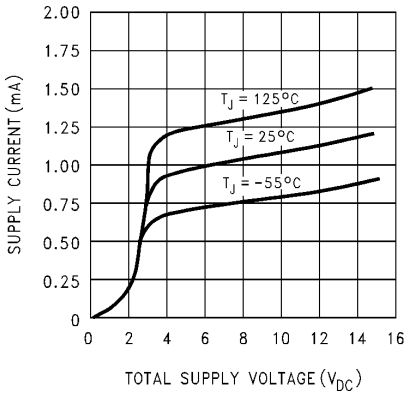

Figure 5-5. Supply Current vs Supply Voltage

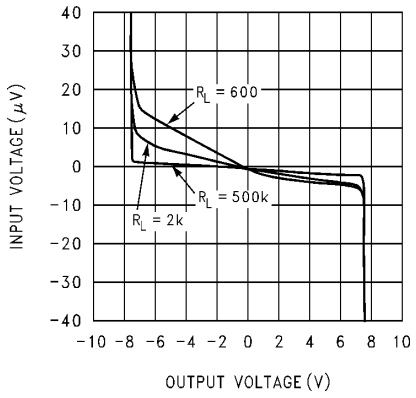

Figure 5-6. Input Voltage vs Output Voltage

Copyright © 2024 Texas Instruments Incorporated

5.8 Typical Characteristics (continued)

at T_A = 25°C, V_S = ±7.5V, V_{OUT} = mid-supply, and R_L ≥ 1MΩ (unless otherwise specified)

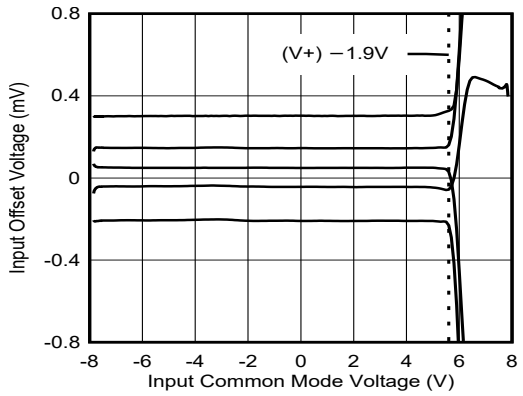

Figure 5-7. Input Offset Voltage vs Common Mode Voltage

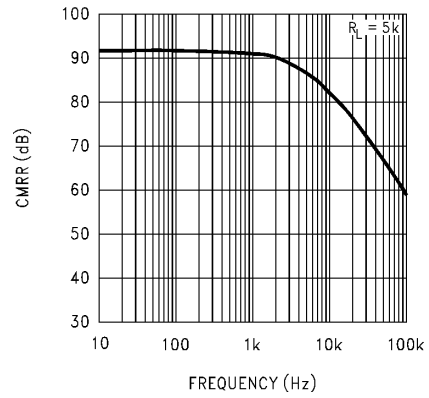

Figure 5-8. Common Mode Rejection Ratio vs Frequency

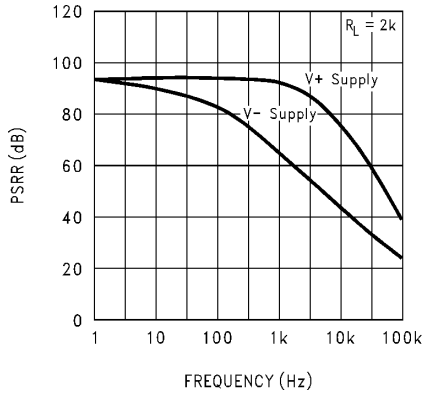

Figure 5-9. Power Supply Rejection Ratio vs Frequency

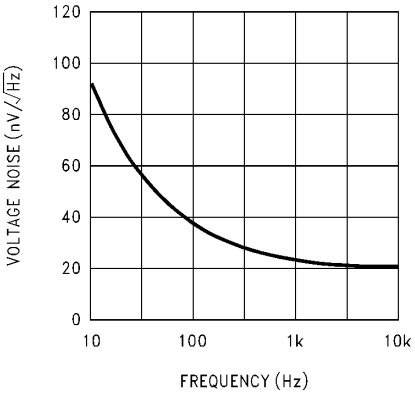

Figure 5-10. Input Voltage Noise vs Frequency

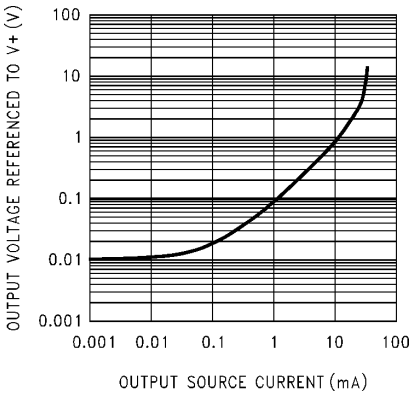

Figure 5-11. Output Characteristics Sourcing Current

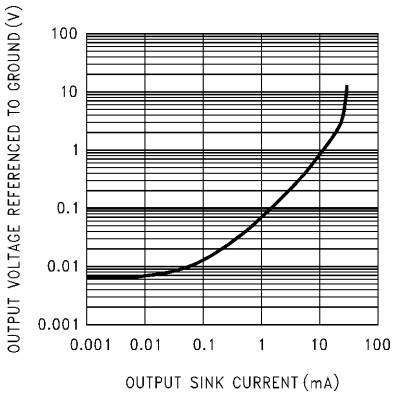

Figure 5-12. Output Characteristics Sinking Current

Copyright © 2024 Texas Instruments Incorporated

5.8 Typical Characteristics (continued)

at T_A = 25°C, V_S = ±7.5V, V_{OUT} = mid-supply, and R_L≥ 1MΩ (unless otherwise specified)

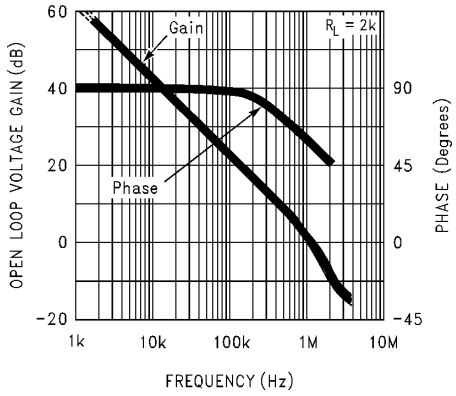

Figure 5-13. Gain and Phase Response vs Temperature

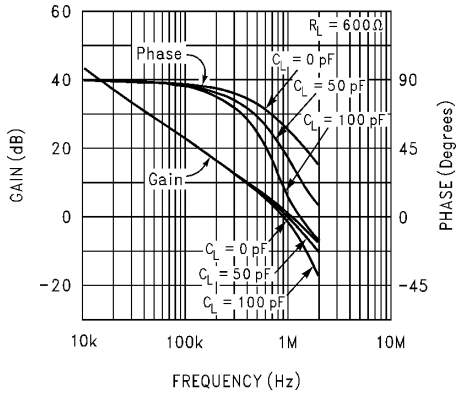

R_L = 600Ω

Figure 5-14. Gain and Phase Response vs Capacitive Load

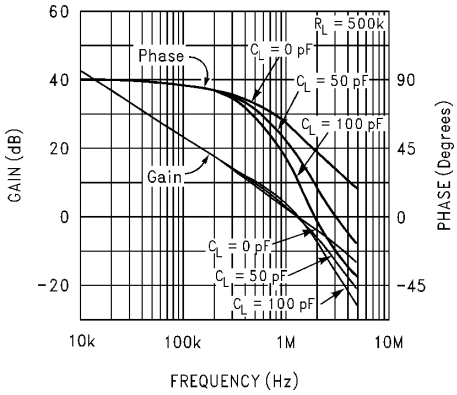

R_L = 500kΩ

Figure 5-15. Gain and Phase Response vs Capacitive Load

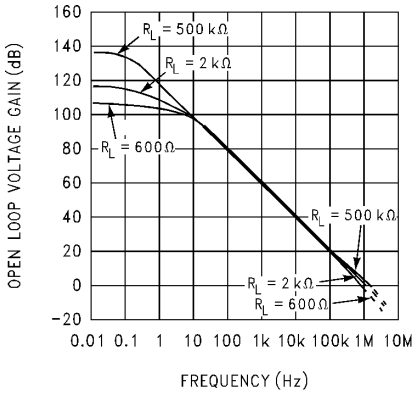

Figure 5-16. Open-Loop Frequency Response

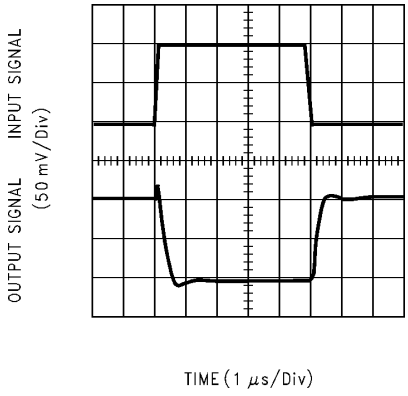

Figure 5-17. Inverting Small-Signal Pulse Response

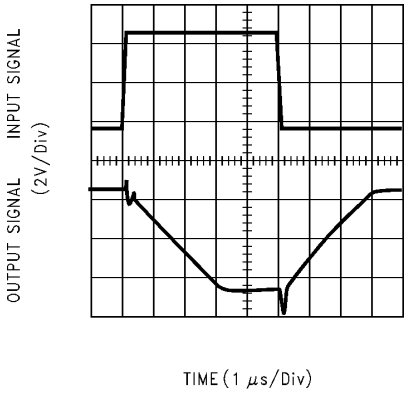

Figure 5-18. Inverting Large-Signal Pulse Response

Copyright © 2024 Texas Instruments Incorporated

5.8 Typical Characteristics (continued)

at T_A = 25°C, V_S = ±7.5V, V_{OUT} = mid-supply, and R_L≥ 1MΩ (unless otherwise specified)

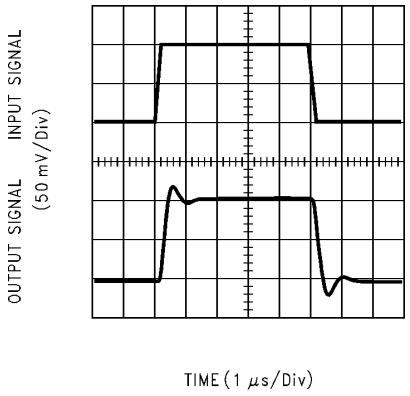

Figure 5-19. Noninverting Small-Signal Pulse Response

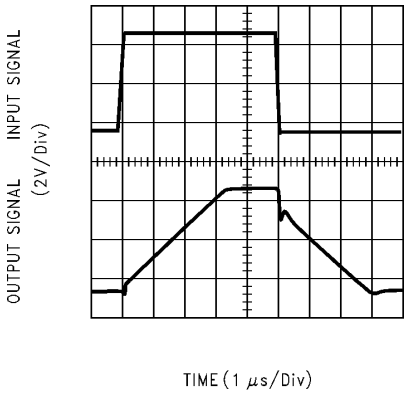

Figure 5-20. Noninverting Large-Signal Pulse Response

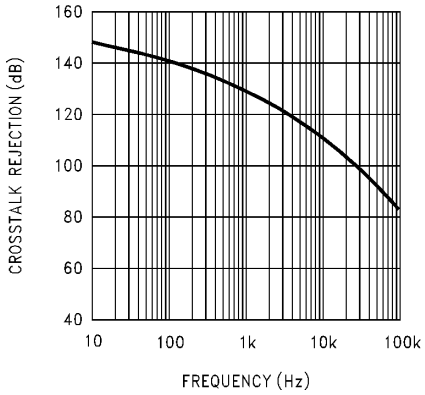

Figure 5-21. Crosstalk Rejection vs Frequency

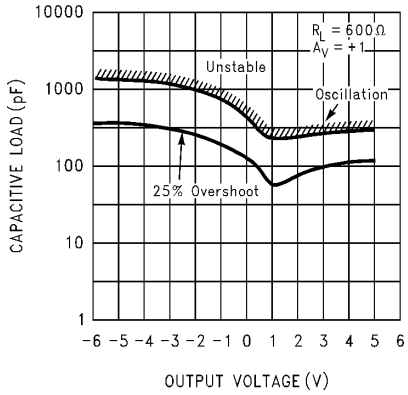

R_L = 600Ω

Figure 5-22. Stability vs Capacitive Load

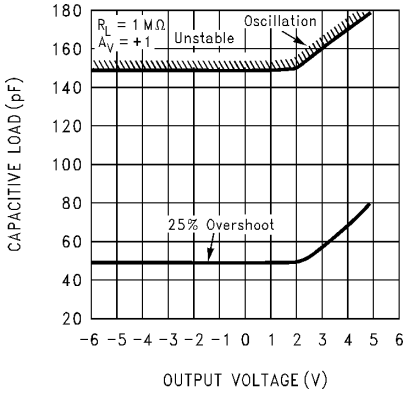

R_L = 1MΩ

Figure 5-23. Stability vs Capacitive Load

Copyright © 2024 Texas Instruments Incorporated

6 Application and Implementation

Note

Information in the following applications sections is not part of the TI component specification, and TI does not warrant its accuracy or completeness. TI's customers are responsible for determining suitability of components for their purposes, as well as validating and testing their design implementation to confirm system functionality.

6.1 Application Information

6.1.1 Amplifier Topology

The LMC608x incorporate a novel op amp design topology that enables rail to rail output swing even when driving a large load. The topology provides both low output impedance and large gain. Special compensation design techniques are incorporated to maintain stability over a wider range of operating conditions than traditional micropower op amps. These features make the LMC608x both easier to design with, and provide higher speed than products typically found in this ultra-low power class. The LMC608x provide a wide input common-mode voltage range extending to the negative supply. In the presence of large input common-mode voltages, input bias current performance can be degraded. Large common-mode voltages are uncommon in very low leakage designs.

6.1.2 Compensating for Input Capacitance

The use of large value feedback resistors is quite common for amplifiers with ultra-low input current, like the LMC608x.

Although the LMC608x are highly stable over a wide range of operating conditions, certain precautions must be met to achieve the desired pulse response when a large feedback resistor is used. Large feedback resistors and even small values of input capacitance, due to transducers, photodiodes, and circuit board parasitics, reduce phase margins.

When a high input impedance is demanded, guarding of the LMC608x is suggested. Guarding input lines not only reduces leakage, but lowers stray input capacitance as well. (See Printed-Circuit-Board Layout for High Impedance Work)

The effect of input capacitance can be compensated for by adding a capacitor, C_f, around the feedback resistors (as in Figure 6-1) such that:

$$\frac{1}{2\pi R_1 C_{IN}} \geq \frac{1}{2\pi R_2 C_f} \tag{1}$$

or

$$R_1 C_{IN} \leq R_2 C_f \tag{2}$$

The exact value of C_{IN} can be difficult to find, so C_f can be experimentally adjusted so that the desired pulse response is achieved. Refer to the LMC66x for a more detailed discussion on compensating for input capacitance.

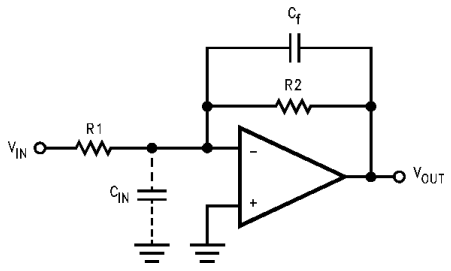

Figure 6-1. Canceling the Effect of Input Capacitance

6.1.3 Capacitive Load Tolerance

All rail-to-rail output swing op amps have voltage gain in the output stage. A compensation capacitor is normally included in this integrator stage. The frequency location of the dominant pole is affected by the resistive load on the amplifier. Capacitive load driving capability can be optimized by using an appropriate resistive load in parallel with the capacitive load (see Section 5.8).

Direct capacitive loading reduces the phase margin of many op amps. A pole in the feedback loop is created by the combination of the op amp output impedance and the capacitive load. This pole induces phase lag at the unity-gain crossover frequency of the amplifier resulting in either an oscillatory or underdamped pulse response. With a few external components, op amps can easily indirectly drive capacitive loads, as shown in Figure 6-2.

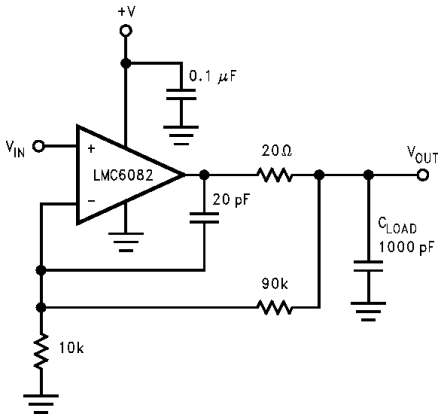

Figure 6-2. LMC6082 Noninverting Gain of 10 Amplifier, Compensated to Handle Capacitive Loads

In the circuit of Figure 6-2, R1 and C1 serve to counteract the loss of phase margin by feeding the high frequency component of the output signal back to the amplifier inverting input, thereby preserving phase margin in the overall feedback loop.

Capacitive load driving capability is enhanced by using a pull up resistor to V^+ Figure 6-3. Typically a pull up resistor conducting 500µA or more significantly improves capacitive load responses. The value of the pull up resistor must be determined based on the current sinking capability of the amplifier with respect to the desired output swing. Open loop gain of the amplifier can also be affected by the pullup resistor (see Section 5.7).

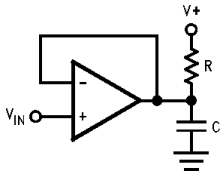

Figure 6-3. Compensating for Large Capacitive Loads With a Pullup Resistor

6.1.4 Latch-Up

CMOS devices tend to be susceptible to latch-up as a result of the internal, parasitic, silicon-controlled rectifier (SCR) effects. The input and output (I/O) pins look similar to the gate of the SCR. A minimum current is required to trigger the SCR gate lead. Use some resistive method to isolate any capacitance from supplying excess current to the I/O pins. In addition, like an SCR, there is a minimum holding current for any latch-up mode. Limiting current to the supply pins also inhibits latch-up susceptibility.

Copyright © 2024 Texas Instruments Incorporated

6.2 Typical Applications

6.2.1 Typical Single-Supply Applications

The extremely high input impedance, and low power consumption, make the LMC608x an excellent choice for applications that require battery-powered operation. Examples of these types of applications are hand-held pH probes, analytic medical instruments, magnetic field detectors, gas detectors, and silicon based pressure transducers.

Figure 6-4 shows an instrumentation amplifier that features high differential and common mode input resistance (> $10^{14}\Omega$), 0.01% gain accuracy at A_V = 1000, excellent CMRR with 1kΩ imbalance in bridge source resistance. Input current is less than 100fA and offset drift is less than 2.5μV/°C. R_2 provides a simple means of adjusting gain over a wide range without degrading CMRR. R_7 is an initial trim used to maximize CMRR without using super precision matched resistors. For good CMRR over temperature, use low drift resistors like the RES11A. An example of an instrumentation amplifier with the LMC608x is provided in the next section.

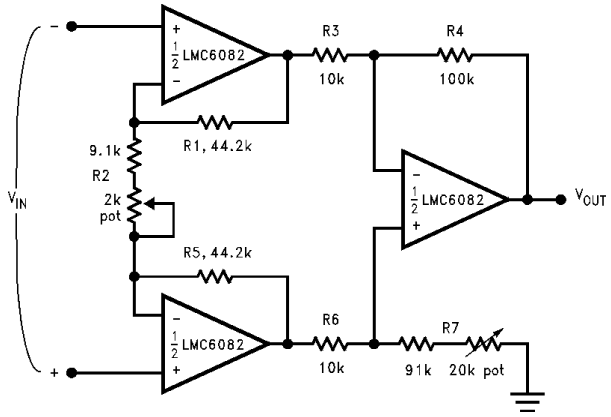

If $R_1 = R_5$, $R_3 = R_6$, and $R_4 = R_7$; then

$$\frac{V_{OUT}}{V_{IN}} = \frac{R_2 + 2R_1}{R_2} \times \frac{R_4}{R_3} \quad (3)$$

$A_V \approx 100$ for circuit shown (R_2 = 9.822kΩ).

Figure 6-4. Instrumentation Amplifier

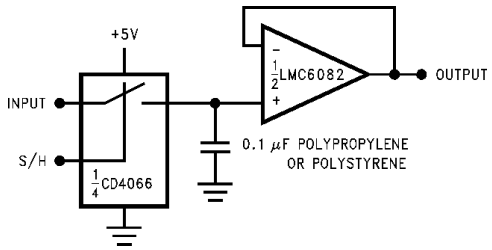

Figure 6-5. Low Leakage Sample and Hold

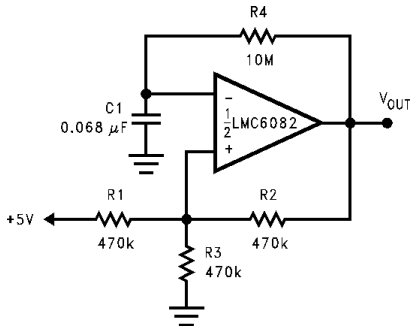

Figure 6-6. 1Hz Square-Wave Oscillator

6.2.2 Instrumentation Amplifier

The measurement of differential signals is quite common across many applications and are especially prevalent in biopotential sensors, for example electrocardiograms. Biopotential sensors can often be high impedance and require low input bias and current noise. Instrumentation amplifiers, introduced in the previous section, are commonly used to condition differential signals from biopotential sensors The LMC608x are a great choice in particular due to the extremely low input bias current and current noise, high common-mode rejection ratio (CMRR) and low power. A high performance instrumentation amplifier can be achieved by using the LMC608x and a pair of RES11A matched resistors.

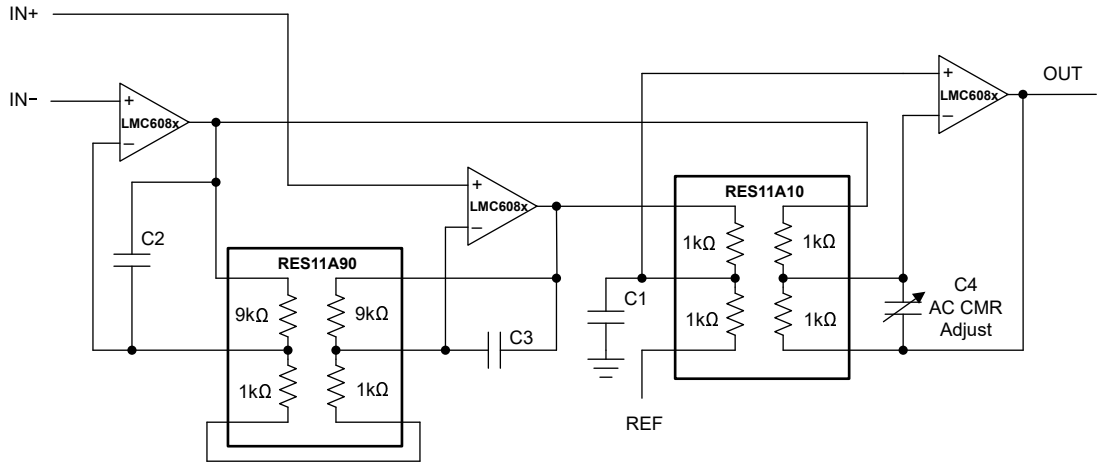

Figure 6-7. Instrumentation Amplifier With the RES11A

Figure 6-7 shows an instrumentation amplifier design with a gain of 10V/V. The first RES11A is used to set the gain of the amplifier. In this case, a ratio of 1:9 is used to create a gain of 10V/V, but many different gain configurations are possible. The second RES11A is used to build a high CMRR, low drift, unity gain difference amplifier. This design provides a precision, differential-to-single ended amplifier with very high input impedance. A smaller, lower power design, a two op amp instrumentation amplifier, is possible using the dual channel LMC6082 and only one RES11A matched pair at the expense of higher CMRR.

Copyright © 2024 Texas Instruments Incorporated

6.3 Layout

6.3.1 Layout Guidelines

6.3.1.1 Printed Circuit Board Layout for High-Impedance Work

Generally, any circuit that operates with less than 1000pA of leakage current requires special layout of the printed circuit board (PCB). To take advantage of the ultra-low bias current of the LMC608x, typically less than 10fA, an excellent layout is crucial. Fortunately, the techniques of obtaining low leakages are quite simple. First, do not ignore the surface leakage of the PCB, even though the leakage can sometimes appear acceptably low, because under conditions of high humidity or dust or contamination, the surface leakage can be appreciable.

To minimize the effect of any surface leakage, lay out a ring of foil completely surrounding the LMC608x inputs and the terminals of capacitors, diodes, conductors, resistors, relay terminals, and so on, connected to the op amp inputs, as in Figure 6-8. To have a significant effect, place guard rings on both the top and bottom of the PCB. This PCB foil must then be connected to a voltage that is at the same voltage as the amplifier inputs because no leakage current can flow between two points at the same potential. For example, a PCB trace-to-pad resistance of $10^{12}\Omega$, which is normally considered a very large resistance, can leak 5pA if the trace were a 5V bus adjacent to the pad of the input. This leakage causes a 100 times degradation from the LMC608x actual performance. However, if a guard ring is held within 5mV of the inputs, then even a resistance of $10^{11}\Omega$ causes only 0.05pA of leakage current. See Figure 6-9 to Figure 6-11 for typical connections of guard rings for standard op amp configurations.

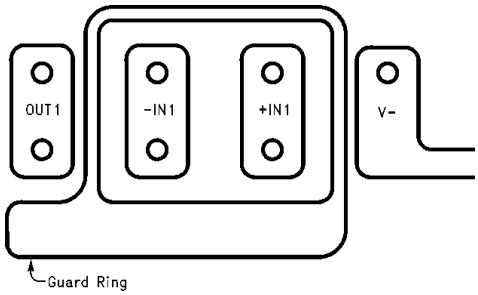

Figure 6-8. Example of Guard Ring in Printed Circuit Board Layout

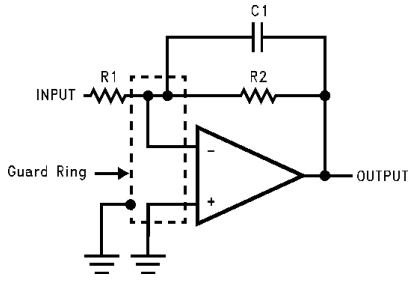

Figure 6-9. Typical Connections of Guard Rings: Inverting Amplifier

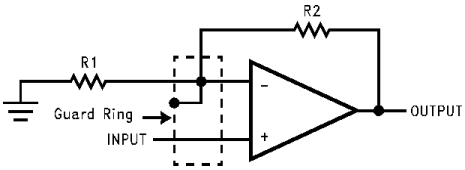

Figure 6-10. Typical Connections of Guard Rings: Noninverting Amplifier

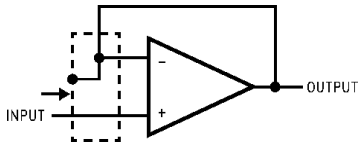

Figure 6-11. Typical Connections of Guard Rings: Follower

Be aware that when laying out a PCB for the sake of just a few circuits is inappropriate, there is another technique that is even better than a guard ring on a PCB. Do not insert the amplifier input pin into the board at

Copyright © 2024 Texas Instruments Incorporated

all; instead, bend the pin up in the air and use only air as an insulator because air is an excellent insulator. In this case, some of the advantages of PCB construction are lost, but the advantages of air are sometimes well worth the effort of using point-to-point up-in-the-air wiring. See Figure 6-12.

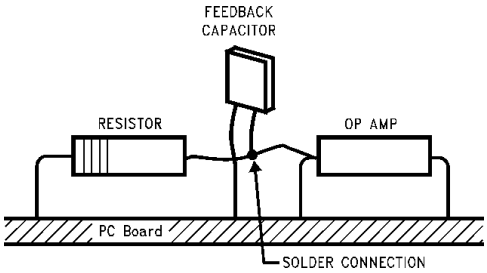

Note

Input pins are lifted out of PCB and soldered directly to components. All other pins are connected to PCB.

Figure 6-12. Air wiring

Copyright © 2024 Texas Instruments Incorporated

7 Device and Documentation Support

TI offers an extensive line of development tools. Tools and software to evaluate the performance of the device, generate code, and develop solutions are listed below.

7.1 Receiving Notification of Documentation Updates

To receive notification of documentation updates, navigate to the device product folder on ti.com. Click on *Notifications* to register and receive a weekly digest of any product information that has changed. For change details, review the revision history included in any revised document.

7.2 Support Resources

TI E2E™ support forums are an engineer's go-to source for fast, verified answers and design help — straight from the experts. Search existing answers or ask your own question to get the quick design help you need.

Linked content is provided "AS IS" by the respective contributors. They do not constitute TI specifications and do not necessarily reflect TI's views; see TI's Terms of Use.

7.3 Trademarks

TI E2E™ is a trademark of Texas Instruments.
All trademarks are the property of their respective owners.

7.4 Electrostatic Discharge Caution



This integrated circuit can be damaged by ESD. Texas Instruments recommends that all integrated circuits be handled with appropriate precautions. Failure to observe proper handling and installation procedures can cause damage.

ESD damage can range from subtle performance degradation to complete device failure. Precision integrated circuits may be more susceptible to damage because very small parametric changes could cause the device not to meet its published specifications.

7.5 Glossary

TI Glossary	This glossary lists and explains terms, acronyms, and definitions.

8 Revision History

NOTE: Page numbers for previous revisions may differ from page numbers in the current version.

Changes from Revision D (March 2013) to Revision E (February 2024)	Page
• Added LMC6081 and LMC6084 devices and associated content	1
• Changed output swing load condition from 100kΩ to 2kΩ, single supply operation from 15V to 15.5V, and high voltage gain from 130dB to 123dB in *Features* to match the *Electrical Characteristics*	1
• Updated device description in *Description*	1
• Added *Pin Configurations and Functions*	3
• Added *Thermal Information*	6
• Changed separate DC and AC *Electrical Characteristics* into single *Electrical Characteristics*	7
• Changed parameter names to conform to latest data sheet standards in *Electrical Characteristics*	7
• Changed input current noise density specification from 0.2fA/$\sqrt{\text{Hz}}$ to 4fA/$\sqrt{\text{Hz}}$ in *Electrical Characteristics*	7
• Changed total harmonic distortion specification from 0.01% to 0.2% in *Electrical Characteristics*	7
• Added footnote detailing how slew rate minimum specification is specified in *Electrical Characteristics*	7
• Added offset voltage vs input common mode voltage and input bias vs common mode voltage curves in *Typical Characteristics*	11
• Added R_L, V_{CM}, and V_{OUT} conditions to the *Typical Characteristics* header	11
• Deleted Figure 4 and Figure 5 from *Typical Characteristics*	11
• Updated description in *Amplifier Topology*	15
• Added reference to RES11A instrumentation amplifier circuit in *Typical Single-Supply Applications*	17
• Added *Instrumentation Amplifier* section	18

Copyright © 2024 Texas Instruments Incorporated

Changes from Revision C (March 2013) to Revision D (March 2013) **Page**

- Added the *Pin Configuration and Functions*, *Specifications*, *Absolute Maximum Ratings*, *ESD Ratings*, *Recommended Operating Conditions*, *Thermal Information*, *Electrical Characteristics*, *Typical Characteristics*, *Detailed Description*, *Overview*, *Functional Block Diagram*, *Feature Description*, *Device Functional Modes*, *Application and Implementation*, *Typical Applications*, *Power Supply Recommendations*, *Layout*, *Layout Guidelines*, *Layout Example*, *Device and Documentation Support*, and *Mechanical, Packaging, and Orderable Information* sections....1
- Changed layout of National Data Sheet to TI format....17

9 Mechanical, Packaging, and Orderable Information

The following pages include mechanical, packaging, and orderable information. This information is the most current data available for the designated devices. This data is subject to change without notice and revision of this document. For browser-based versions of this data sheet, refer to the left-hand navigation.

Copyright © 2024 Texas Instruments Incorporated

PACKAGING INFORMATION

Orderable part number	Status (1)	Material type (2)	Package | Pins	Package qty | Carrier	RoHS (3)	Lead finish/ Ball material (4)	MSL rating/ Peak reflow (5)	Op temp (°C)	Part marking (6)
LMC6081-MDA	Active	Production	DIESALE (Y) | 0	270 | TUBE	Yes	Call TI	Level-1-NA-UNLIM	-55 to 125	
LMC6081-MDA.A	Active	Production	DIESALE (Y) | 0	270 | TUBE	Yes	Call TI	Level-1-NA-UNLIM	-55 to 125	
LMC6081AIM/NOPB	Obsolete	Production	SOIC (D) | 8	-	-	Call TI	Call TI	-40 to 85	LMC60 81AIM
LMC6081AIMX/NOPB	Active	Production	SOIC (D) | 8	2500 | LARGE T&R	Yes	NIPDAU | SN	Level-1-260C-UNLIM	-40 to 85	(6081AI, LMC60) 81AIM
LMC6081AIMX/NOPB.A	Active	Production	SOIC (D) | 8	2500 | LARGE T&R	Yes	NIPDAU	Level-1-260C-UNLIM	-40 to 85	(6081AI, LMC60) 81AIM
LMC6081AIMX/NOPB.B	Active	Production	SOIC (D) | 8	2500 | LARGE T&R	Yes	NIPDAU	Level-1-260C-UNLIM	-40 to 85	(6081AI, LMC60) 81AIM
LMC6081IM/NOPB	Obsolete	Production	SOIC (D) | 8	-	-	Call TI	Call TI	-40 to 85	LMC60 81IM
LMC6081IMX/NOPB	Active	Production	SOIC (D) | 8	2500 | LARGE T&R	Yes	NIPDAU | SN	Level-1-260C-UNLIM	-40 to 85	(6081I, LMC60) 81IM
LMC6081IMX/NOPB.A	Active	Production	SOIC (D) | 8	2500 | LARGE T&R	Yes	NIPDAU	Level-1-260C-UNLIM	-40 to 85	(6081I, LMC60) 81IM
LMC6081IMX/NOPB.B	Active	Production	SOIC (D) | 8	2500 | LARGE T&R	Yes	NIPDAU	Level-1-260C-UNLIM	-40 to 85	(6081I, LMC60) 81IM
LMC6081IN/NOPB	Active	Production	PDIP (P) | 8	40 | TUBE	Yes	NIPDAU	Level-1-NA-UNLIM	-40 to 85	LMC6081 IN
LMC6081IN/NOPB.A	Active	Production	PDIP (P) | 8	40 | TUBE	Yes	NIPDAU	Level-1-NA-UNLIM	-40 to 85	LMC6081 IN
LMC6081IN/NOPB.B	Active	Production	PDIP (P) | 8	40 | TUBE	Yes	NIPDAU	Level-1-NA-UNLIM	-40 to 85	LMC6081 IN
LMC6082AIM/NOPB	Obsolete	Production	SOIC (D) | 8	-	-	Call TI	Call TI	-40 to 85	LMC60 82AIM
LMC6082AIMX/NOPB	Active	Production	SOIC (D) | 8	2500 | LARGE T&R	Yes	NIPDAU | SN	Level-1-260C-UNLIM	-40 to 85	(6082AI, LMC60) 82AIM
LMC6082AIMX/NOPB.A	Active	Production	SOIC (D) | 8	2500 | LARGE T&R	Yes	NIPDAU	Level-1-260C-UNLIM	-40 to 85	(6082AI, LMC60) 82AIM
LMC6082AIMX/NOPB.B	Active	Production	SOIC (D) | 8	2500 | LARGE T&R	Yes	NIPDAU	Level-1-260C-UNLIM	-40 to 85	(6082AI, LMC60) 82AIM

Orderable part number	Status (1)	Material type (2)	Package | Pins	Package qty | Carrier	RoHS (3)	Lead finish/ Ball material (4)	MSL rating/ Peak reflow (5)	Op temp (°C)	Part marking (6)
LMC6082AIN/NOPB	Active	Production	PDIP (P) | 8	40 | TUBE	Yes	NIPDAU	Level-1-NA-UNLIM	-40 to 85	LMC6082 AIN
LMC6082AIN/NOPB.A	Active	Production	PDIP (P) | 8	40 | TUBE	Yes	NIPDAU	Level-1-NA-UNLIM	-40 to 85	LMC6082 AIN
LMC6082AIN/NOPB.B	Active	Production	PDIP (P) | 8	40 | TUBE	Yes	NIPDAU	Level-1-NA-UNLIM	-40 to 85	LMC6082 AIN
LMC6082IM/NOPB	Obsolete	Production	SOIC (D) | 8	-	-	Call TI	Call TI	-40 to 85	LMC60 82IM
LMC6082IMX/NOPB	Active	Production	SOIC (D) | 8	2500 | LARGE T&R	Yes	NIPDAU | SN	Level-1-260C-UNLIM	-40 to 85	LMC60 82IM
LMC6082IMX/NOPB.A	Active	Production	SOIC (D) | 8	2500 | LARGE T&R	Yes	NIPDAU	Level-1-260C-UNLIM	-40 to 85	LMC60 82IM
LMC6082IMX/NOPB.B	Active	Production	SOIC (D) | 8	2500 | LARGE T&R	Yes	NIPDAU	Level-1-260C-UNLIM	-40 to 85	LMC60 82IM
LMC6082IN/NOPB	Active	Production	PDIP (P) | 8	40 | TUBE	Yes	NIPDAU	Level-1-NA-UNLIM	-40 to 85	LMC6082 IN
LMC6082IN/NOPB.A	Active	Production	PDIP (P) | 8	40 | TUBE	Yes	NIPDAU	Level-1-NA-UNLIM	-40 to 85	LMC6082 IN
LMC6082IN/NOPB.B	Active	Production	PDIP (P) | 8	40 | TUBE	Yes	NIPDAU	Level-1-NA-UNLIM	-40 to 85	LMC6082 IN
LMC6084AIM/NOPB	Obsolete	Production	SOIC (D) | 14	-	-	Call TI	Call TI	-40 to 85	LMC6084 AIM
LMC6084AIMX/NOPB	Active	Production	SOIC (D) | 14	2500 | LARGE T&R	Yes	NIPDAU	Level-1-260C-UNLIM	-40 to 85	(LMC6084, LMC6084AIM) AIM
LMC6084AIMX/NOPB.A	Active	Production	SOIC (D) | 14	2500 | LARGE T&R	Yes	NIPDAU	Level-1-260C-UNLIM	-40 to 85	(LMC6084, LMC6084AIM) AIM
LMC6084IM/NOPB	Obsolete	Production	SOIC (D) | 14	-	-	Call TI	Call TI	-40 to 85	LMC6084IM
LMC6084IMX/NOPB	Active	Production	SOIC (D) | 14	2500 | LARGE T&R	Yes	NIPDAU	Level-1-260C-UNLIM	-40 to 85	LMC6084IM
LMC6084IMX/NOPB.A	Active	Production	SOIC (D) | 14	2500 | LARGE T&R	Yes	NIPDAU	Level-1-260C-UNLIM	-40 to 85	LMC6084IM

(1) **Status:** For more details on status, see our product life cycle.

(2) Material type: When designated, preproduction parts are prototypes/experimental devices, and are not yet approved or released for full production. Testing and final process, including without limitation quality assurance, reliability performance testing, and/or process qualification, may not yet be complete, and this item is subject to further changes or possible discontinuation. If available for ordering, purchases will be subject to an additional waiver at checkout, and are intended for early internal evaluation purposes only. These items are sold without warranties of any kind.

(3) RoHS values: Yes, No, RoHS Exempt. See the TI RoHS Statement for additional information and value definition.

(4) Lead finish/Ball material: Parts may have multiple material finish options. Finish options are separated by a vertical ruled line. Lead finish/Ball material values may wrap to two lines if the finish value exceeds the maximum column width.

(5) MSL rating/Peak reflow: The moisture sensitivity level ratings and peak solder (reflow) temperatures. In the event that a part has multiple moisture sensitivity ratings, only the lowest level per JEDEC standards is shown. Refer to the shipping label for the actual reflow temperature that will be used to mount the part to the printed circuit board.

(6) Part marking: There may be an additional marking, which relates to the logo, the lot trace code information, or the environmental category of the part.

Multiple part markings will be inside parentheses. Only one part marking contained in parentheses and separated by a "~" will appear on a part. If a line is indented then it is a continuation of the previous line and the two combined represent the entire part marking for that device.

Important Information and Disclaimer: The information provided on this page represents TI's knowledge and belief as of the date that it is provided. TI bases its knowledge and belief on information provided by third parties, and makes no representation or warranty as to the accuracy of such information. Efforts are underway to better integrate information from third parties. TI has taken and continues to take reasonable steps to provide representative and accurate information but may not have conducted destructive testing or chemical analysis on incoming materials and chemicals. TI and TI suppliers consider certain information to be proprietary, and thus CAS numbers and other limited information may not be available for release.

In no event shall TI's liability arising out of such information exceed the total purchase price of the TI part(s) at issue in this document sold by TI to Customer on an annual basis.

TAPE AND REEL INFORMATION

REEL DIMENSIONS

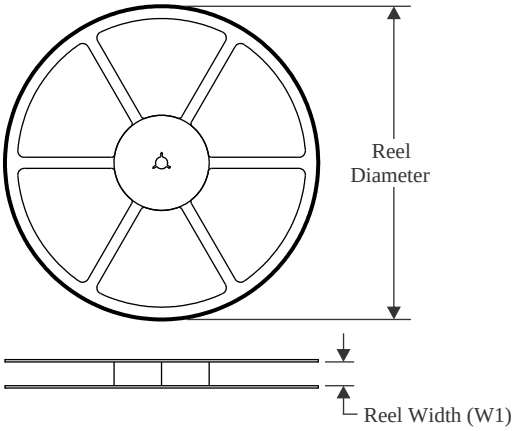

TAPE DIMENSIONS

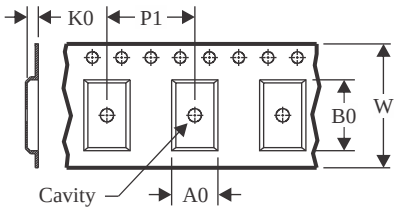

A0	Dimension designed to accommodate the component width
B0	Dimension designed to accommodate the component length
K0	Dimension designed to accommodate the component thickness
W	Overall width of the carrier tape
P1	Pitch between successive cavity centers

QUADRANT ASSIGNMENTS FOR PIN 1 ORIENTATION IN TAPE

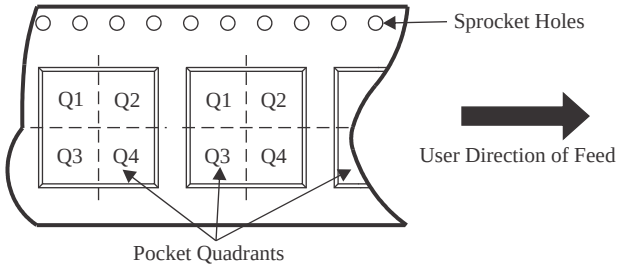

*All dimensions are nominal

Device	Package Type	Package Drawing	Pins	SPQ	Reel Diameter (mm)	Reel Width W1 (mm)	A0 (mm)	B0 (mm)	K0 (mm)	P1 (mm)	W (mm)	Pin1 Quadrant
LMC6081AIMX/NOPB	SOIC	D	8	2500	330.0	12.4	6.5	5.4	2.0	8.0	12.0	Q1
LMC6081AIMX/NOPB	SOIC	D	8	2500	330.0	12.4	6.4	5.2	2.1	8.0	12.0	Q1
LMC6081IMX/NOPB	SOIC	D	8	2500	330.0	12.4	6.4	5.2	2.1	8.0	12.0	Q1
LMC6081IMX/NOPB	SOIC	D	8	2500	330.0	12.4	6.5	5.4	2.0	8.0	12.0	Q1
LMC6082AIMX/NOPB	SOIC	D	8	2500	330.0	12.4	6.4	5.2	2.1	8.0	12.0	Q1
LMC6082AIMX/NOPB	SOIC	D	8	2500	330.0	12.4	6.5	5.4	2.0	8.0	12.0	Q1
LMC6082IMX/NOPB	SOIC	D	8	2500	330.0	12.4	6.4	5.2	2.1	8.0	12.0	Q1
LMC6082IMX/NOPB	SOIC	D	8	2500	330.0	12.4	6.5	5.4	2.0	8.0	12.0	Q1
LMC6084AIMX/NOPB	SOIC	D	14	2500	330.0	16.4	6.5	9.0	2.1	8.0	16.0	Q1
LMC6084IMX/NOPB	SOIC	D	14	2500	330.0	16.4	6.5	9.0	2.1	8.0	16.0	Q1

TAPE AND REEL BOX DIMENSIONS

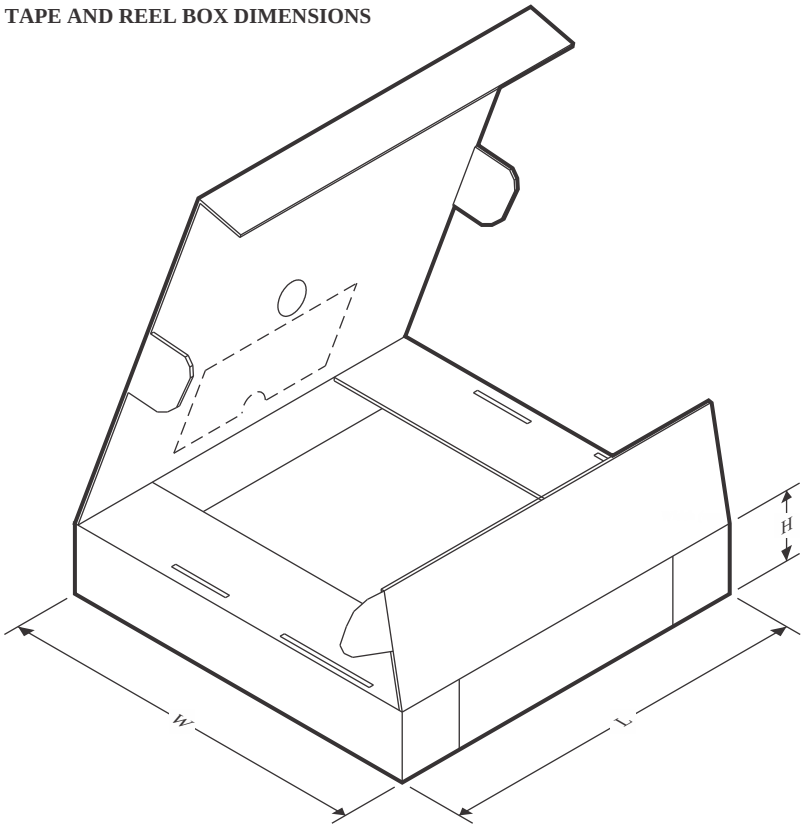

*All dimensions are nominal

Device	Package Type	Package Drawing	Pins	SPQ	Length (mm)	Width (mm)	Height (mm)
LMC6081AIMX/NOPB	SOIC	D	8	2500	367.0	367.0	35.0
LMC6081AIMX/NOPB	SOIC	D	8	2500	353.0	353.0	32.0
LMC6081IMX/NOPB	SOIC	D	8	2500	353.0	353.0	32.0
LMC6081IMX/NOPB	SOIC	D	8	2500	367.0	367.0	35.0
LMC6082AIMX/NOPB	SOIC	D	8	2500	353.0	353.0	32.0
LMC6082AIMX/NOPB	SOIC	D	8	2500	367.0	367.0	35.0
LMC6082IMX/NOPB	SOIC	D	8	2500	353.0	353.0	32.0
LMC6082IMX/NOPB	SOIC	D	8	2500	367.0	367.0	35.0
LMC6084AIMX/NOPB	SOIC	D	14	2500	353.0	353.0	32.0
LMC6084IMX/NOPB	SOIC	D	14	2500	353.0	353.0	32.0

TUBE

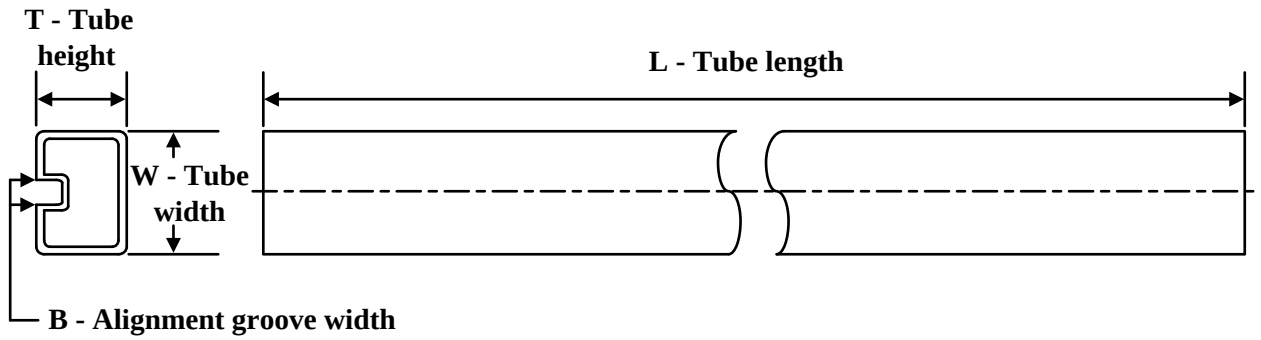

*All dimensions are nominal

Device	Package Name	Package Type	Pins	SPQ	L (mm)	W (mm)	T (µm)	B (mm)
LMC6081IN/NOPB	P	PDIP	8	40	502	14	11938	4.32
LMC6081IN/NOPB.A	P	PDIP	8	40	502	14	11938	4.32
LMC6081IN/NOPB.B	P	PDIP	8	40	502	14	11938	4.32
LMC6082AIN/NOPB	P	PDIP	8	40	502	14	11938	4.32
LMC6082AIN/NOPB.A	P	PDIP	8	40	502	14	11938	4.32
LMC6082AIN/NOPB.B	P	PDIP	8	40	502	14	11938	4.32
LMC6082IN/NOPB	P	PDIP	8	40	502	14	11938	4.32
LMC6082IN/NOPB.A	P	PDIP	8	40	502	14	11938	4.32
LMC6082IN/NOPB.B	P	PDIP	8	40	502	14	11938	4.32



PACKAGE OUTLINE

D0014A

SOIC - 1.75 mm max height

SMALL OUTLINE INTEGRATED CIRCUIT

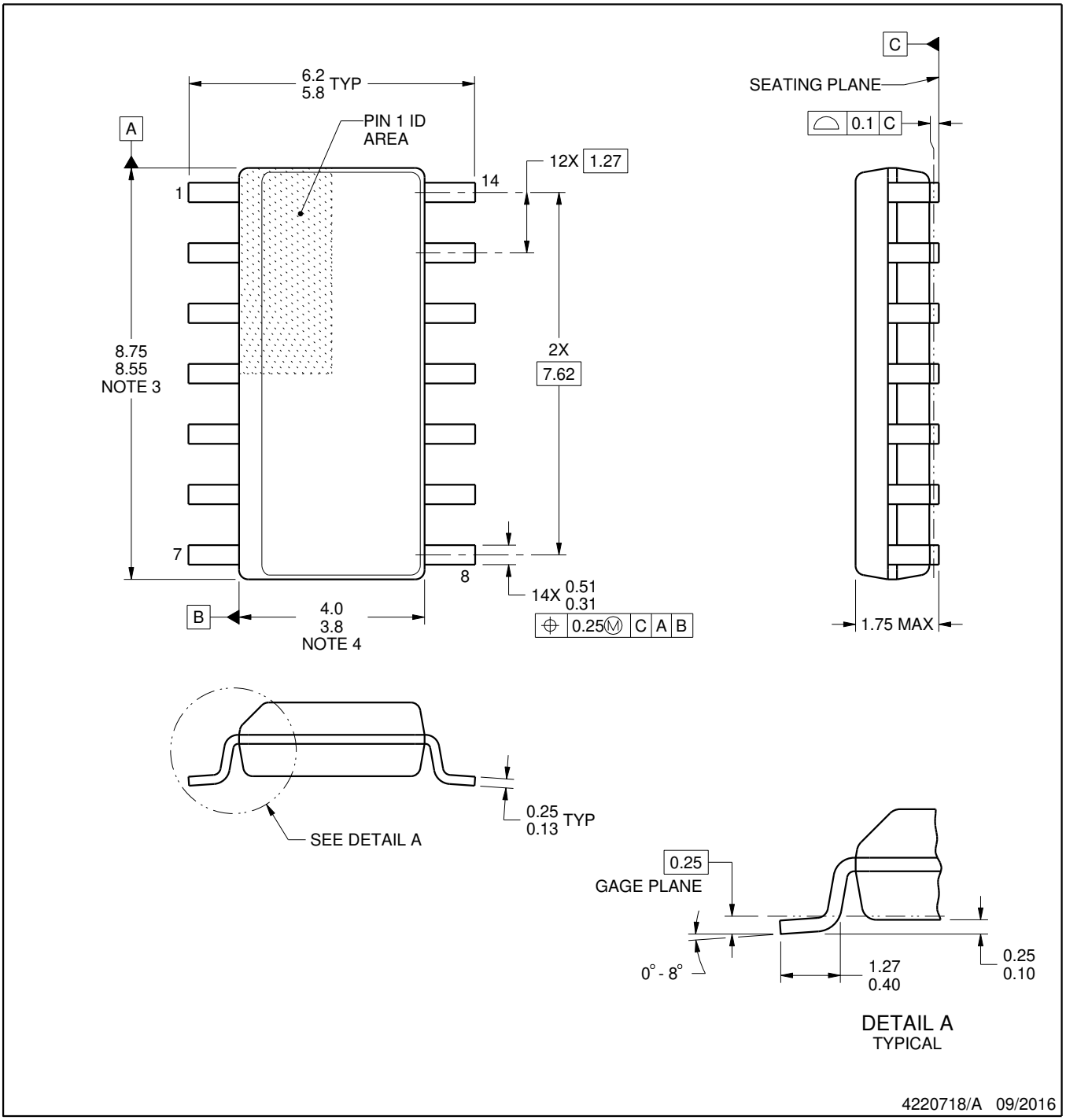

NOTES:

1. All linear dimensions are in millimeters. Dimensions in parenthesis are for reference only. Dimensioning and tolerancing per ASME Y14.5M.
2. This drawing is subject to change without notice.
3. This dimension does not include mold flash, protrusions, or gate burrs. Mold flash, protrusions, or gate burrs shall not exceed 0.15 mm, per side.
4. This dimension does not include interlead flash. Interlead flash shall not exceed 0.43 mm, per side.
5. Reference JEDEC registration MS-012, variation AB.

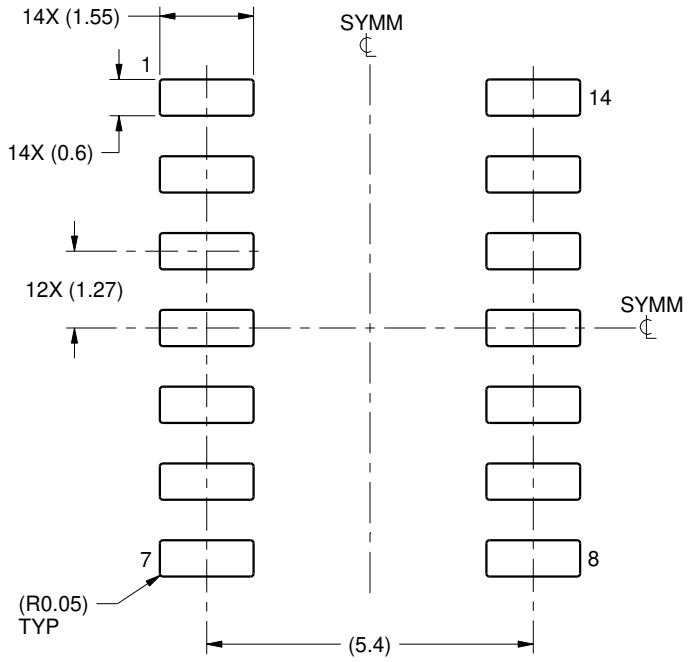

LAND PATTERN EXAMPLE
SCALE:8X

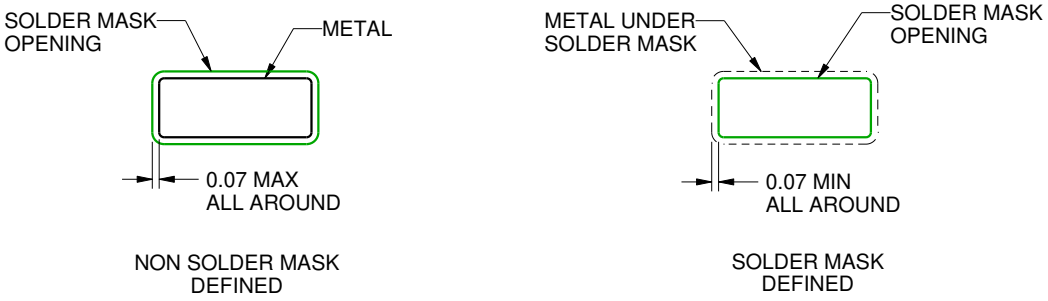

SOLDER MASK DETAILS

4220718/A 09/2016

NOTES: (continued)

6. Publication IPC-7351 may have alternate designs.
7. Solder mask tolerances between and around signal pads can vary based on board fabrication site.

EXAMPLE STENCIL DESIGN

D0014A

SOIC - 1.75 mm max height

SMALL OUTLINE INTEGRATED CIRCUIT

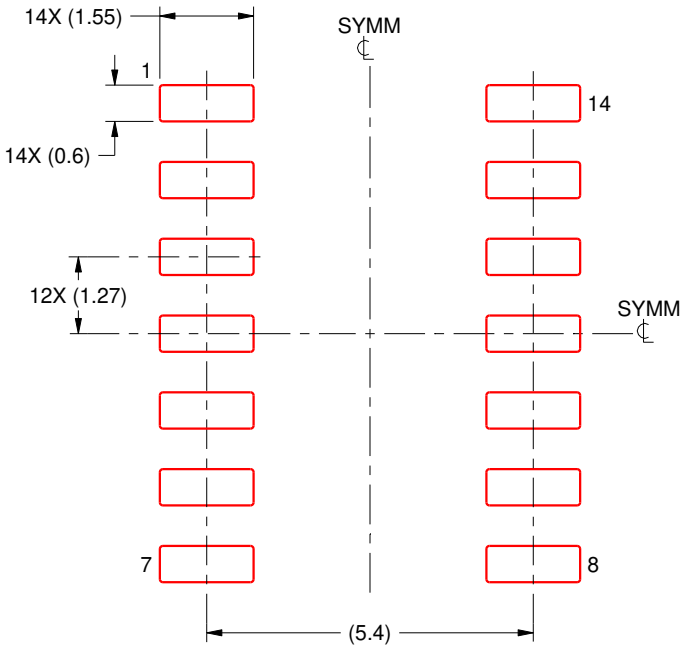

SOLDER PASTE EXAMPLE
BASED ON 0.125 mm THICK STENCIL
SCALE:8X

4220718/A 09/2016

NOTES: (continued)

8. Laser cutting apertures with trapezoidal walls and rounded corners may offer better paste release. IPC-7525 may have alternate design recommendations.
9. Board assembly site may have different recommendations for stencil design.



PACKAGE OUTLINE

D0008A

SOIC - 1.75 mm max height

SMALL OUTLINE INTEGRATED CIRCUIT

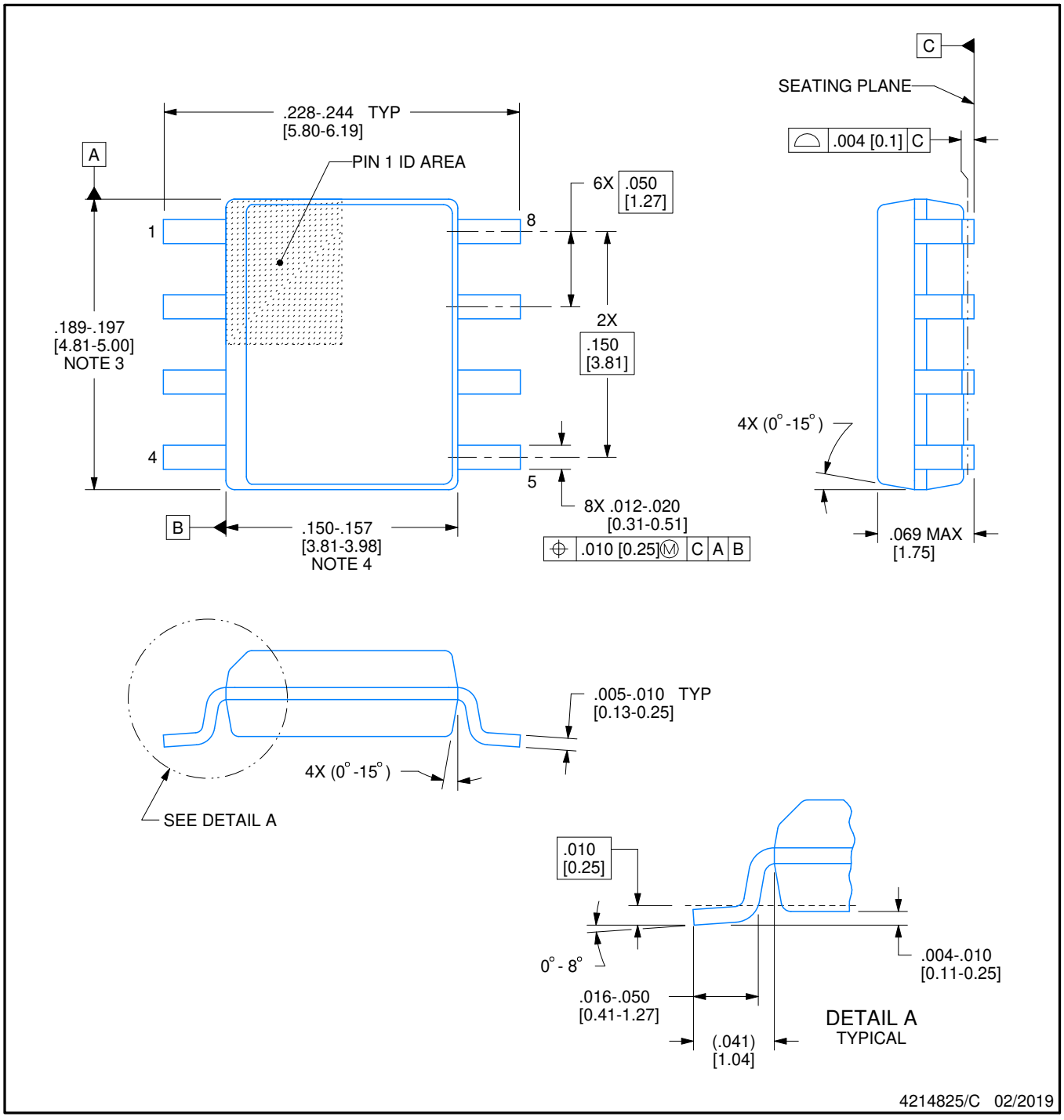

NOTES:

1. Linear dimensions are in inches [millimeters]. Dimensions in parenthesis are for reference only. Controlling dimensions are in inches. Dimensioning and tolerancing per ASME Y14.5M.
2. This drawing is subject to change without notice.
3. This dimension does not include mold flash, protrusions, or gate burrs. Mold flash, protrusions, or gate burrs shall not exceed .006 [0.15] per side.
4. This dimension does not include interlead flash.
5. Reference JEDEC registration MS-012, variation AA.

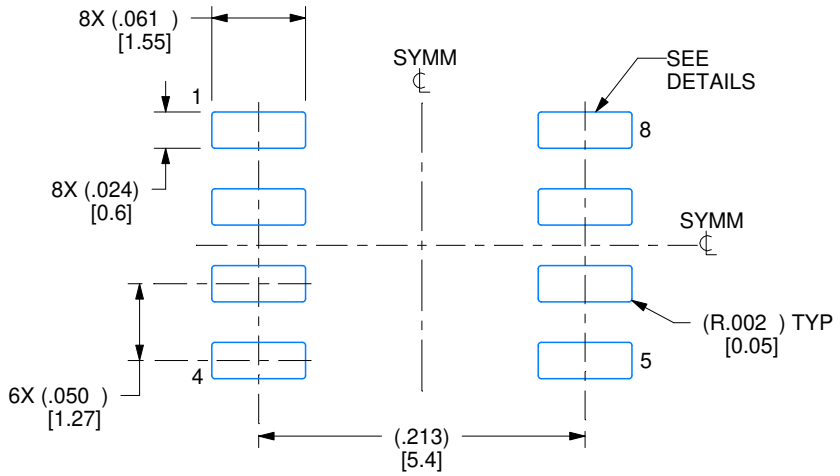

LAND PATTERN EXAMPLE
EXPOSED METAL SHOWN
SCALE:8X

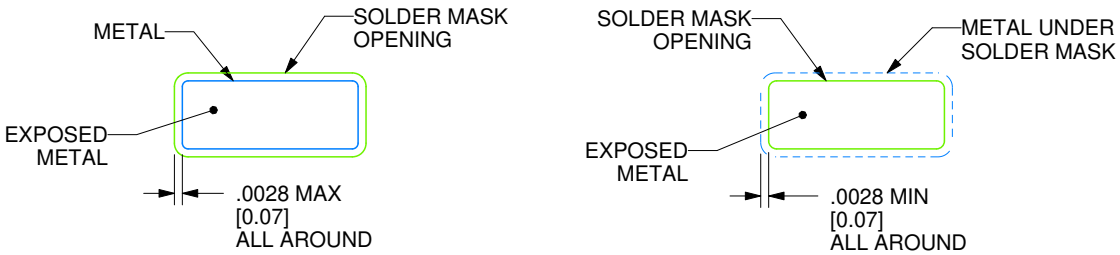

SOLDER MASK DETAILS

4214825/C 02/2019

NOTES: (continued)

6. Publication IPC-7351 may have alternate designs.
7. Solder mask tolerances between and around signal pads can vary based on board fabrication site.

EXAMPLE STENCIL DESIGN

D0008A

SOIC - 1.75 mm max height

SMALL OUTLINE INTEGRATED CIRCUIT

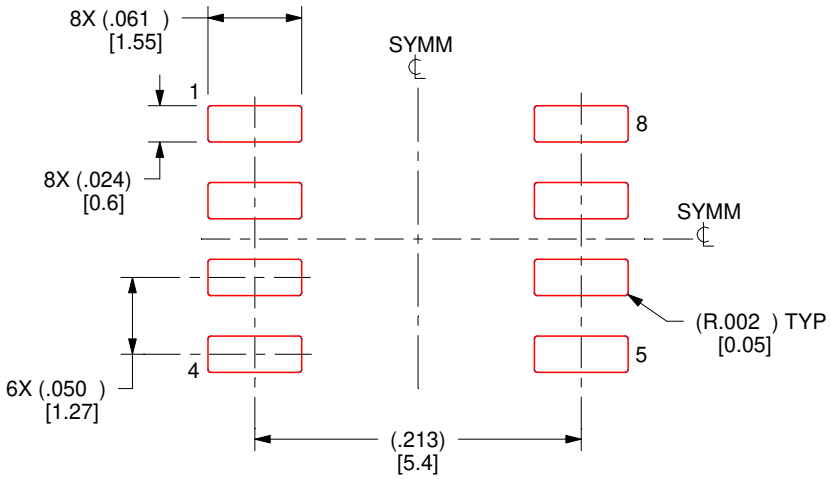

SOLDER PASTE EXAMPLE
BASED ON .005 INCH [0.125 MM] THICK STENCIL
SCALE:8X

4214825/C 02/2019

NOTES: (continued)

8. Laser cutting apertures with trapezoidal walls and rounded corners may offer better paste release. IPC-7525 may have alternate design recommendations.
9. Board assembly site may have different recommendations for stencil design.

P (R–PDIP–T8) PLASTIC DUAL–IN–LINE PACKAGE

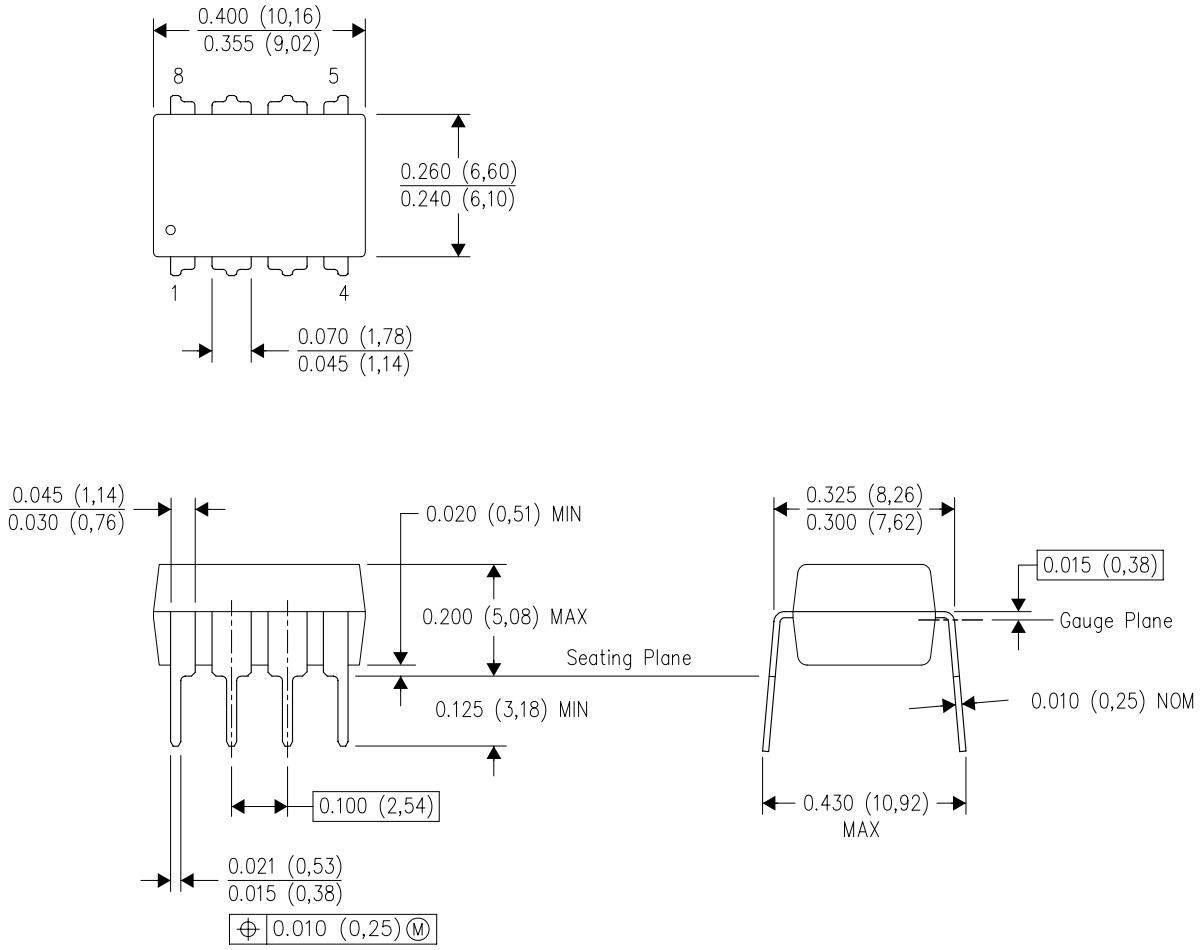

NOTES:
A. All linear dimensions are in inches (millimeters).
B. This drawing is subject to change without notice.
C. Falls within JEDEC MS–001 variation BA.

IMPORTANT NOTICE AND DISCLAIMER

TI PROVIDES TECHNICAL AND RELIABILITY DATA (INCLUDING DATASHEETS), DESIGN RESOURCES (INCLUDING REFERENCE DESIGNS), APPLICATION OR OTHER DESIGN ADVICE, WEB TOOLS, SAFETY INFORMATION, AND OTHER RESOURCES “AS IS” AND WITH ALL FAULTS, AND DISCLAIMS ALL WARRANTIES, EXPRESS AND IMPLIED, INCLUDING WITHOUT LIMITATION ANY IMPLIED WARRANTIES OF MERCHANTABILITY, FITNESS FOR A PARTICULAR PURPOSE OR NON-INFRINGEMENT OF THIRD PARTY INTELLECTUAL PROPERTY RIGHTS.

These resources are intended for skilled developers designing with TI products. You are solely responsible for (1) selecting the appropriate TI products for your application, (2) designing, validating and testing your application, and (3) ensuring your application meets applicable standards, and any other safety, security, regulatory or other requirements.

These resources are subject to change without notice. TI grants you permission to use these resources only for development of an application that uses the TI products described in the resource. Other reproduction and display of these resources is prohibited. No license is granted to any other TI intellectual property right or to any third party intellectual property right. TI disclaims responsibility for, and you fully indemnify TI and its representatives against any claims, damages, costs, losses, and liabilities arising out of your use of these resources.

TI’s products are provided subject to TI’s Terms of Sale, TI’s General Quality Guidelines, or other applicable terms available either on ti.com or provided in conjunction with such TI products. TI’s provision of these resources does not expand or otherwise alter TI’s applicable warranties or warranty disclaimers for TI products. Unless TI explicitly designates a product as custom or customer-specified, TI products are standard, catalog, general purpose devices.

TI objects to and rejects any additional or different terms you may propose.

Copyright © 2026, Texas Instruments Incorporated

Last updated 10/2025