LP387x 0.8-A Fast Ultra-Low-Dropout Linear Regulators

1 Features

- Input Voltage: 2.5 V to 7 V
- Ultra-Low-Dropout Voltage
- Low Ground Pin Current
- Load Regulation of 0.04%
- 10-nA Quiescent Current in Shutdown Mode
- Specified Output Current of 0.8-A DC
- Output Voltage Accuracy ±1.5%
- $\overline{\text{ERROR}}$ Flag Indicates Output Status
- SENSE Option Improves Load Regulation
- Minimum Output Capacitor Requirements
- Overtemperature/Overcurrent Protection
- −40°C to +125°C Junction Temperature Range

2 Applications

- Microprocessor Power Supplies
- GTL, GTL+, BTL, and SSTL Bus Terminators
- Power Supplies for DSPs
- SCSI Terminator
- Post Regulators
- High-Efficiency Linear Regulators
- Battery Chargers
- Other Battery-Powered Applications

3 Description

The LP3871 and LP3874 series of fast ultra-low-dropout linear regulators operate from a 2.5-V to 7-V input supply. Wide range of preset output voltage options are available. These ultra-low-dropout linear regulators respond very quickly to step changes in load, which makes them suitable for low voltage microprocessor applications. The devices are developed on a CMOS process which allows low quiescent current operation independent of output load current. This CMOS process also allows the LP3871 and LP3874 to operate under extremely low dropout conditions.

Dropout Voltage: Ultra-low-dropout voltage; typically 24 mV at 80-mA load current and 240 mV at 0.8-A load current.

Ground Pin Current: Typically 6 mA at 0.8-A load current.

Shutdown Mode: Typically 10-nA quiescent current when the $\overline{\text{SD}}$ pin is pulled low.

$\overline{\text{ERROR}}$ Flag: $\overline{\text{ERROR}}$ flag goes low when the output voltage drops 10% below nominal value.

SENSE: SENSE pin improves regulation at remote loads.

Precision Output Voltage: Multiple output voltage options are available ranging from 1.8 V to 5 V with a ensured accuracy of ±1.5% at room temperature, and ±3% over all conditions (varying line, load, and temperature).

Device Information(1)

PART NUMBER	PACKAGE	BODY SIZE (NOM)
LP3871 LP3874	SOT-223 (5)	6.50 mm x 3.56 mm
	DDPAK/ TO-263 (5)	10.16 mm x 8.42 mm

(1) For all available packages, see the orderable addendum at the end of the data sheet.

Typical Applications

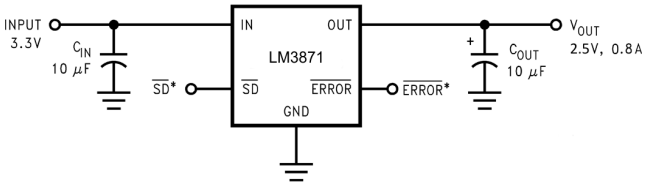

*$\overline{\text{SD}}$ and $\overline{\text{ERROR}}$ pins must be pulled high through a 10-kΩ pullup resistor. Connect the $\overline{\text{ERROR}}$ pin to ground if this function is not used. See *Application and Implementation* for more information.

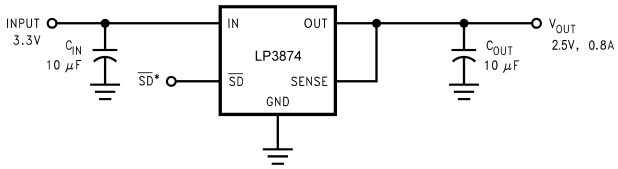

*$\overline{\text{SD}}$ must be pulled high through a 10-kΩ pullup resistor. See *Application and Implementation* for more information.

An IMPORTANT NOTICE at the end of this data sheet addresses availability, warranty, changes, use in safety-critical applications, intellectual property matters and other important disclaimers. PRODUCTION DATA.

Table of Contents

1 **Features** ... 1
2 **Applications** ... 1
3 **Description** ... 1
4 **Revision History** ... 2
5 **Pin Configuration and Functions** ... 3
6 **Specifications** ... 4
6.1 Absolute Maximum Ratings ... 4
6.2 ESD Ratings ... 4
6.3 Recommended Operating Conditions ... 4
6.4 Thermal Information ... 4
6.5 Electrical Characteristics ... 5
6.6 Typical Characteristics ... 7
7 **Detailed Description** ... 8
7.1 Overview ... 8
7.2 Functional Block Diagrams ... 8
7.3 Feature Description ... 8
7.4 Device Functional Modes ... 9
8 **Application and Implementation** ... 11
8.1 Application Information ... 11
8.2 Typical Applications ... 11
9 **Power Supply Recommendations** ... 16
9.1 Power Dissipation ... 16
10 **Layout** ... 16
10.1 Layout Guidelines ... 16
10.2 Layout Examples ... 16
11 **Device and Documentation Support** ... 17
11.1 Related Links ... 17
11.2 Community Resources ... 17
11.3 Trademarks ... 17
11.4 Electrostatic Discharge Caution ... 17
11.5 Glossary ... 17
12 **Mechanical, Packaging, and Orderable Information** ... 17

4 Revision History

NOTE: Page numbers for previous revisions may differ from page numbers in the current version.

Changes from Revision G (April 2013) to Revision H	Page
• Added *Pin Configuration and Functions* section, *ESD Rating* table, *Feature Description* , *Device Functional Modes*, *Application and Implementation*, *Power Supply Recommendations*, *Layout*, *Device and Documentation Support* , and *Mechanical, Packaging, and Orderable Information* sections; conform pin names in graphics to TI nomenclature	1
• Deleted Lead temperature row - information in POA	4
• Deleted Heatsinking subsections regarding specific packages as specs have been updated (see *Thermal Information*).	16
• Changed layout examples to eliminate obsolete thermal-value references	16

Changes from Revision F (April 2013) to Revision G	Page
• Changed layout of National Data Sheet to TI format	16

Copyright © 2003–2015, Texas Instruments Incorporated

5 Pin Configuration and Functions

KTT Package
5-Pin DDPAK/TO-263
Top View

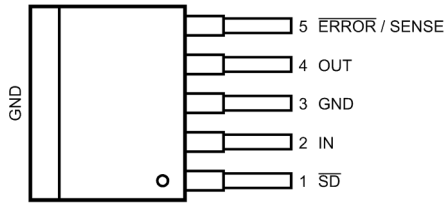

NC Package
5-Pin SOT-223
Top View

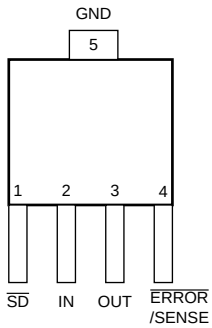

Pin Functions

PIN					TYPE	DESCRIPTION
NAME	LP3871		LP3874			
	SOT-223	DDPAK/TO-263	SOT-223	DDPAK/TO-263		
$\overline{\text{ERROR}}$	4	5	—	—	O	$\overline{\text{ERROR}}$ Flag
GND	5	3	5	3	GND	Ground
IN	2	2	2	2	I	Input voltage
OUT	3	4	3	4	O	Output voltage
$\overline{\text{SD}}$	1	1	1	1	I	Shutdown
SENSE	—	—	4	5	I	Remote voltage sense

Copyright © 2003–2015, Texas Instruments Incorporated

6 Specifications

6.1 Absolute Maximum Ratings

over operating free-air temperature range (unless otherwise noted)[1][2]

	MIN	MAX	UNIT
Input supply voltage (survival)	−0.3	7.5	V
Shutdown input voltage (survival)	−0.3	7.5	V
Output voltage (survival)[3][4]	−0.3	6	V
I_{OUT} (survival)	Short-circuit protected		
Maximum voltage for $\overline{\text{ERROR}}$ Pin		V_{IN}	V
Maximum voltage for SENSE Pin		V_{OUT}	V
Power dissipation[5]	Internally Limited		
Storage temperature, T_{stg}	−65	150	°C

(1) Stresses beyond those listed under *Absolute Maximum Ratings* may cause permanent damage to the device. These are stress ratings only, which do not imply functional operation of the device at these or any other conditions beyond those indicated under *Recommended Operating Conditions*. Exposure to absolute-maximum-rated conditions for extended periods may affect device reliability.
(2) If Military/Aerospace specified devices are required, please contact the TI Sales Office/Distributors for availability and specifications.
(3) If used in a dual-supply system where the regulator load is returned to a negative supply, the output must be diode-clamped to ground.
(4) The output PMOS structure contains a diode between the IN and OUT pins. This diode is normally reverse biased. This diode will get forward biased if the voltage at the output terminal is forced to be higher than the voltage at the input terminal. This diode can typically withstand 200 mA of DC current and 1 A of peak current.
(5) Internal thermal shutdown circuitry protects the device from permanent damage.

6.2 ESD Ratings

			VALUE	UNIT
$V_{(ESD)}$	Electrostatic discharge	Human-body model (HBM), per ANSI/ESDA/JEDEC JS-001[1]	±2000	V
		Charged-device model (CDM), per JEDEC specification JESD22-C101[2]	±500	

(1) JEDEC document JEP155 states that 500-V HBM allows safe manufacturing with a standard ESD control process.
(2) JEDEC document JEP157 states that 250-V CDM allows safe manufacturing with a standard ESD control process.

6.3 Recommended Operating Conditions

over operating free-air temperature range (unless otherwise noted)

	MIN	MAX	UNIT
Input supply voltage[1]	2.5	7	V
Shutdown input voltage	−0.3	7	V
Maximum operating current (DC)		0.8	A
Junction temperature	−40	125	°C

(1) The minimum operating value for V_{IN} is equal to either [$V_{OUT(NOM)}$ + $V_{DROPOUT}$] or 2.5 V, whichever is greater.

6.4 Thermal Information

THERMAL METRIC[1]		LP3871, LP3874		UNIT
		NC (SOT-223)	KTT (DDPAK/TO-263)	
		5 PINS	5 PINS	
$R_{\theta JA}$	Junction-to-ambient thermal resistance	65.2	40.3	°C/W
$R_{\theta JC(top)}$	Junction-to-case (top) thermal resistance	47.2	43.4	°C/W
$R_{\theta JB}$	Junction-to-board thermal resistance	9.9	23.1	°C/W
ψ_{JT}	Junction-to-top characterization parameter	3.4	11.5	°C/W
ψ_{JB}	Junction-to-board characterization parameter	9.7	22	°C/W
$R_{\theta JC(bot)}$	Junction-to-case (bottom) thermal resistance	—	1	°C/W

(1) For more information about traditional and new thermal metrics, see the *Semiconductor and IC Package Thermal Metrics* application report, SPRA953.

Copyright © 2003–2015, Texas Instruments Incorporated

6.5 Electrical Characteristics

Unless otherwise specified: T_J = 25°C, V_{IN} = $V_{O(NOM)}$ + 1 V, I_L = 10 mA, C_{OUT} = 10 µF, V_{SD} = 2 V.

PARAMETER		TEST CONDITIONS	MIN(1)	TYP(2)	MAX(1)	UNIT
V_{OUT}	Output voltage tolerance(3)	V_{OUT} + 1 V ≤ V_{IN} ≤ 7 V, 10 mA ≤ I_L ≤ 0.8 A	–1.5%	0%	1.5%	
		V_{OUT} + 1 V ≤ V_{IN} ≤ 7 V, 10 mA ≤ I_L ≤ 0.8 A, –40°C ≤ T_J ≤ 125°C	–3%		3%	
ΔV_{OL}	Output voltage line regulation(3)	V_{OUT} + 1 V ≤ V_{IN} ≤ 7 V		0.02%		
		V_{OUT} + 1 V ≤ V_{IN} ≤ 7 V, –40°C ≤ T_J ≤ 125°C		0.06%		
$\Delta V_O/\Delta I_{OUT}$	Output voltage load regulation(3)	10 mA ≤ I_L ≤ 0.8 A		0.04%		
		10 mA ≤ I_L ≤ 0.8 A, –40°C ≤ T_J ≤ 125°C		0.1%		
V_{IN} – V_{OUT}	Dropout voltage(4)	I_L = 80 mA		24	35	mV
		I_L = 80 mA, –40°C ≤ T_J ≤ 125°C			40	
		I_L = 0.8 A		240	300	
		I_L = 0.8 A, –40°C ≤ T_J ≤ 125°C			350	
I_{GND}	Ground pin current in normal operation mode	I_L = 150 mA		5	9	mA
		I_L = 150 mA, –40°C ≤ T_J ≤ 125°C			10	
		I_L = 0.8 A		6	14	
		I_L = 0.8 A, –40°C ≤ T_J ≤ 125°C			15	
I_{GND}	Ground pin current in shutdown mode	V_{SD} ≤ 0.3 V		0.01	10	µA
		–40°C ≤ T_J ≤ 85°C			50	
$I_{O(PK)}$	Peak output current	V_{OUT} ≥ $V_{O(NOM)}$ – 4%		1		A
SHORT CIRCUIT PROTECTION						
I_{SC}	Short-circuit current			2.3		A
SHUTDOWN INPUT						
V_{SDT}	Shutdown threshold	Output = High		V_{IN}		V
		Output = High, –40°C ≤ T_J ≤ 125°C	2			
		Output = Low		0		
		Output = Low, –40°C ≤ T_J ≤ 125°C			0.3	
T_{dOFF}	Turnoff delay	I_L = 0.8 A		20		µs
T_{dON}	Turnon delay	I_L = 0.8 A		25		µs
I_{SD}	$\overline{SD}$ input current	V_{SD} = V_{IN}		1		nA
$\overline{ERROR}$ FLAG						
V_T	Threshold	See(5)		10%		
		See(5), –40°C ≤ T_J ≤ 125°C	5%		16%	
V_{TH}	Threshold hysteresis	See(5)		5%		
		See(5), –40°C ≤ T_J ≤ 125°C	2%		8%	
$V_{EF(Sat)}$	$\overline{ERROR}$ flag saturation	I_{sink} = 100 µA		0.02		V
		I_{sink} = 100 µA, –40°C ≤ T_J ≤ 125°C			0.1	
Td	Flag reset delay			1		µs
I_{lk}	$\overline{ERROR}$ flag pin leakage current			1		nA
I_{max}	$\overline{ERROR}$ flag pin sink current	V_{Error} = 0.5 V		1		mA

(1) Limits are specified by testing, design, or statistical correlation.
(2) Typical numbers are at 25°C and represent the most likely parametric norm.
(3) Output voltage line regulation is defined as the change in output voltage from the nominal value due to change in the input line voltage. Output voltage load regulation is defined as the change in output voltage from the nominal value due to change in load current. The line and load regulation specification contains only the typical number. However, the limits for line and load regulation are included in the output voltage tolerance specification.
(4) Dropout voltage is defined as the minimum input to output differential voltage at which the output drops 2% below the nominal value. Dropout voltage specification applies only to output voltages of 2.5 V and above. For output voltages below 2.5 V, the dropout voltage is nothing but the input to output differential, because the minimum input voltage is 2.5 V.
(5) $\overline{ERROR}$ Flag threshold and hysteresis are specified as percentage of regulated output voltage. See *$\overline{ERROR}$ Flag Operation*.

Electrical Characteristics (continued)

Unless otherwise specified: T_J = 25°C, V_{IN} = $V_{O(NOM)}$ + 1 V, I_L = 10 mA, C_{OUT} = 10 µF, V_{SD} = 2 V.

PARAMETER		TEST CONDITIONS	MIN(1)	TYP(2)	MAX(1)	UNIT
AC PARAMETERS						
PSRR	Ripple rejection	V_{IN} = V_{OUT} + 1 V, C_{OUT} = 10 µF V_{OUT} = 3.3 V, f = 120 Hz		73		dB
		V_{IN} = V_{OUT} + 0.5 V, C_{OUT} = 10 µF V_{OUT} = 3.3 V, f = 120 Hz		57		
$\rho_{n(l/f)}$	Output noise density	f = 120 Hz		0.8		µV
e_n	Output noise voltage	BW = 10 Hz – 100 kHz, V_{OUT} = 2.5 V		150		μV_{RMS}
		BW = 300 Hz – 300 kH, V_{OUT} = 2.5 V		100		

Copyright © 2003–2015, Texas Instruments Incorporated

6.6 Typical Characteristics

Unless otherwise specified: T_J = 25°C, C_{OUT} = 10 µF, C_{IN} = 10 µF, $\overline{SD}$ pin is tied to V_{IN}, V_{OUT} = 2.5 V, V_{IN} = $V_{O(NOM)}$ + 1 V, I_L = 10 mA.

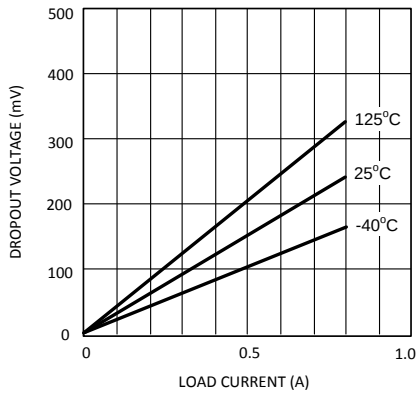

Figure 1. Dropout Voltage vs Output Load Current

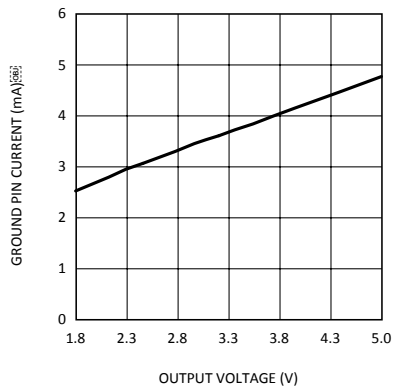

I_L = 800 mA

Figure 2. Ground Current vs Output Voltage

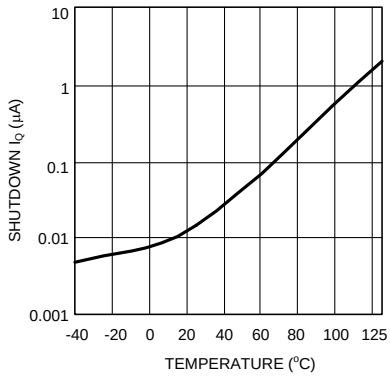

Figure 3. Shutdown I_Q vs Junction Temperature

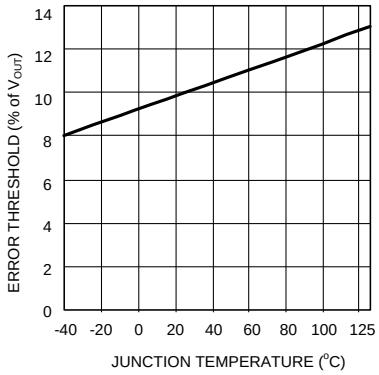

Figure 4. $\overline{ERROR}$ Flag Threshold vs Junction Temperature

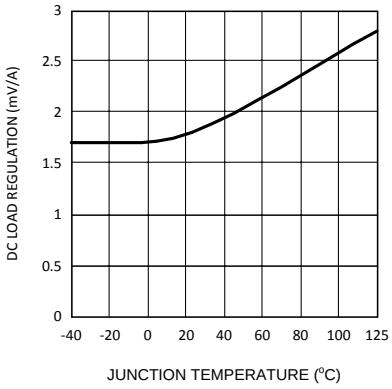

Figure 5. DC Load Regulation vs Junction Temperature

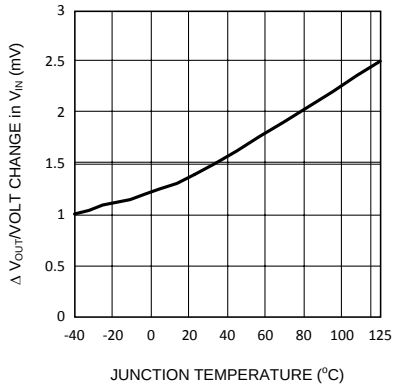

Figure 6. DC Line Regulation vs Temperature

7 Detailed Description

7.1 Overview

The LP3871 and LP3874 linear regulators are designed to provide an ultra-low-dropout voltage with excellent transient response and load/line regulation. For battery-powered always-on type applications, the very low quiescent current of LP3871 and LP3874 in shutdown mode helps reduce battery drain. For applications where load is not placed close to the regulator, LP3874 incorporates a voltage sense circuit to improve voltage regulation at the point of load. The $\overline{\text{ERROR}}$ output pin of LP3871 can be used in the system to flag a low-voltage condition.

7.2 Functional Block Diagrams

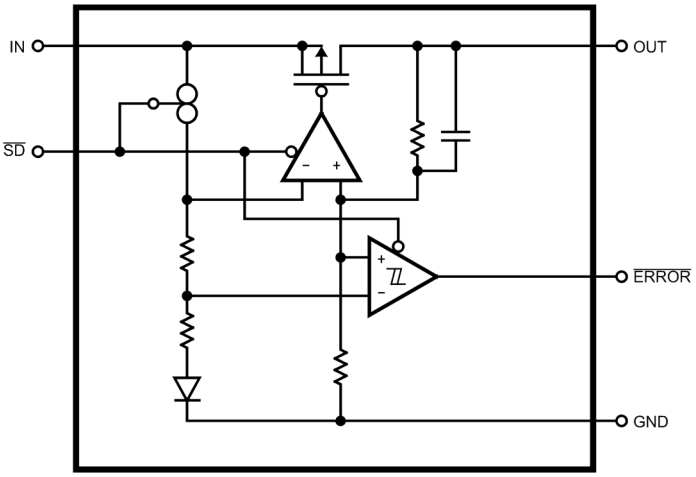

Figure 7. LP3871 Block Diagram

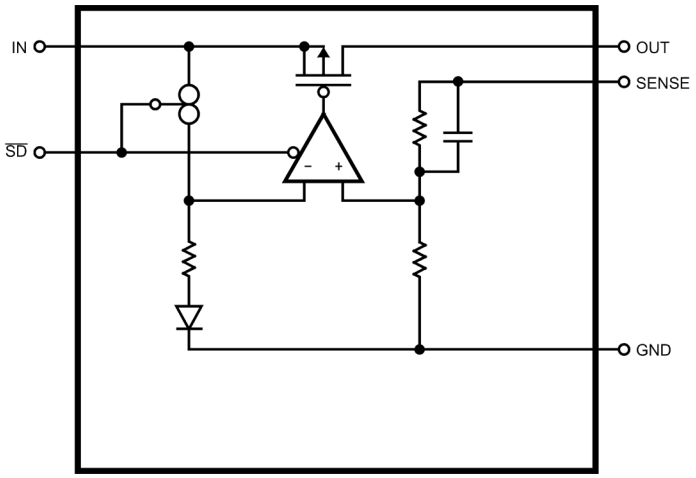

Figure 8. LP3874 Block Diagram

7.3 Feature Description

7.3.1 Shutdown ($\overline{\text{SD}}$)

The LM3871 and LP3874 devices have a shutdown feature that turns the device off and reduces the quiescent current to 10 nA, typical.

Copyright © 2003–2015, Texas Instruments Incorporated

Feature Description (continued)

7.3.2 Short-Circuit Protection

The LP3871and LP3874 devices are short-circuit protected and, in the event of a peak overcurrent condition, the short-circuit control loop will rapidly drive the output PMOS pass element off. Once the power pass element shuts down, the control loop will rapidly cycle the output on and off until the average power dissipation causes the thermal shutdown circuit to respond to servo the on/off cycling to a lower frequency.

7.3.3 Low Dropout Voltage

The LP3871 and LP3874 devices feature an ultra-low-dropout voltage, typically 24 mV at 80-mA load current and 240 mV at 0.8-A load current.

The dropout voltage of a regulator is defined as the minimum input-to-output differential required to stay within 2% of the nominal output voltage. For CMOS LDOs, the dropout voltage is the product of the load current and the $R_{ds(on)}$ of the internal MOSFET.

7.3.4 SENSE Pin

In applications where the regulator output is not very close to the load, LP3874 can provide better remote load regulation using the SENSE pin. Figure 9 depicts the advantage of the SENSE option. LP3871 regulates the voltage at the OUT pin. Hence, the voltage at the remote load will be the regulator output voltage minus the drop across the trace resistance. For example, in the case of a 3.3-V output, if the trace resistance is 100 mΩ, the voltage at the remote load will be 3.22 V with 0.8 A of load current, I_{LOAD}. The LP3874 regulates the voltage at the SENSE pin. Connecting the SENSE pin to the remote load will provide regulation at the remote load, as shown in Figure 9. If the SENSE option pin is not required, the SENSE pin must be connected to the OUT pin.

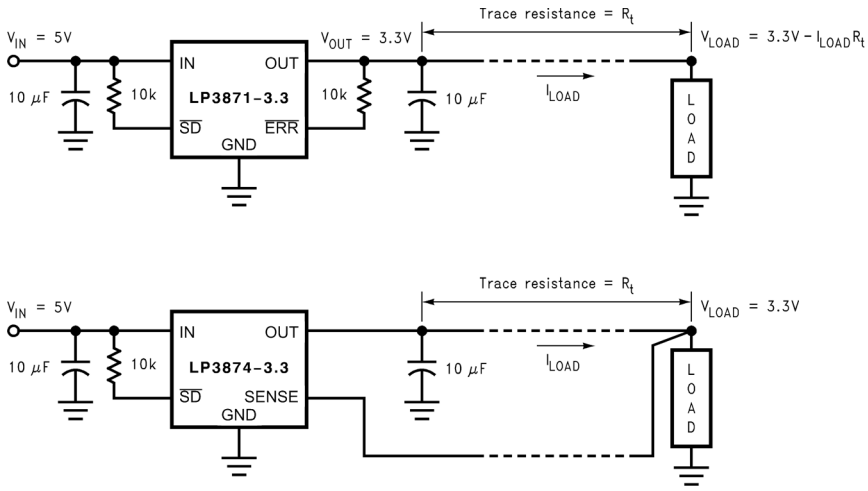

Figure 9. Improving Remote Load Regulation using LP3874

7.4 Device Functional Modes

7.4.1 Shutdown Mode

A CMOS logic low level signal at the shutdown ($\overline{SD}$) pin will turn off the regulator. The $\overline{SD}$ pin must be actively terminated through a 10-kΩ pullup resistor for a proper operation. If this pin is driven from a source that actively pulls high and low (such as a CMOS rail-to-rail comparator), the pullup resistor is not required. This pin must be tied to V_{IN} if not used.

7.4.2 Active Mode

When voltage at $\overline{SD}$ pin of the LP3871 and LP3874 devices is at logic high level, the device is in normal mode of operation.

Device Functional Modes (continued)

7.4.3 $\overline{\text{ERROR}}$ Flag Operation

The LP3871 produces logic low signals at the $\overline{\text{ERROR}}$ Flag pin when the output drops out of regulation due to low input voltage, current limiting, or thermal limiting. This flag has a built-in hysteresis. The timing diagram in Figure 10 shows the relationship between the $\overline{\text{ERROR}}$ flag and the output voltage. In this example, the input voltage is changed to demonstrate the functionality of the $\overline{\text{ERROR}}$ Flag.

The internal $\overline{\text{ERROR}}$ flag comparator has an open drain output stage. Hence, the $\overline{\text{ERROR}}$ pin must be pulled high through a pullup resistor. Although the $\overline{\text{ERROR}}$ flag pin can sink current of 1mA, this current is energy drain from the input supply. Hence, the value of the pullup resistor must be in the range of 10 kΩ to 1 MΩ. *The $\overline{\text{ERROR}}$ pin must be connected to ground if this function is not used.* It must also be noted that when the shutdown pin is pulled low, the $\overline{\text{ERROR}}$ pin is forced to be invalid for reasons of saving power in shutdown mode.

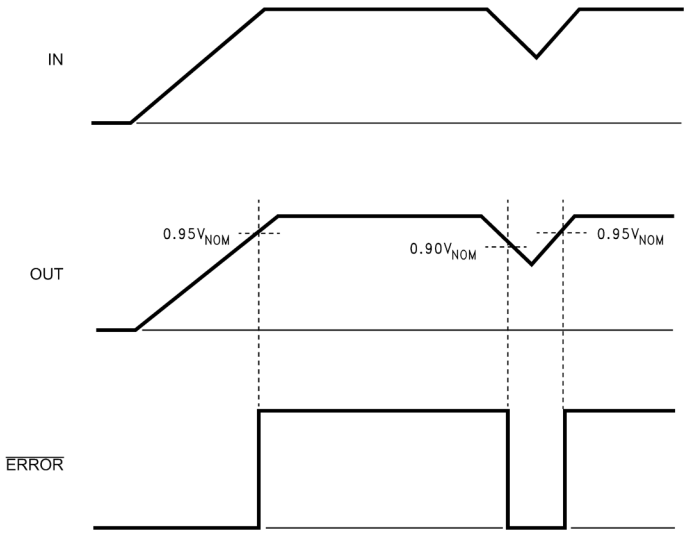

Figure 10. $\overline{\text{ERROR}}$ Flag Operation

Copyright © 2003–2015, Texas Instruments Incorporated

8 Application and Implementation

NOTE

Information in the following applications sections is not part of the TI component specification, and TI does not warrant its accuracy or completeness. TI's customers are responsible for determining suitability of components for their purposes. Customers must validate and test their design implementation to confirm system functionality.

8.1 Application Information

The LP3871 and LP3874 devices are linear regulators designed to provide high load current of up to 0.8 A, low dropout voltage, and low quiescent current in shutdown mode.

8.1.1 Reverse Current Path

The internal MOSFET in LP3871 and LP3874 has an inherent parasitic diode. During normal operation, the input voltage is higher than the output voltage and the parasitic diode is reverse biased. However, if the output is pulled above the input in an application, then current flows from the output to the input as the parasitic diode gets forward biased. The output can be pulled above the input as long as the current in the parasitic diode is limited to 200-mA continuous and 1-A peak.

8.1.2 Turnon Characteristics for Output Voltages Programmed To 2 V or Below

As V_{IN} increases during start-up, the regulator output will track the input until V_{IN} reaches the minimum operating voltage (typically about 2.5 V). For output voltages programmed to 2 V or below, the regulator output may momentarily exceed its programmed output voltage during start-up. Outputs programmed to voltages above 2 V are not affected by this behavior.

8.2 Typical Applications

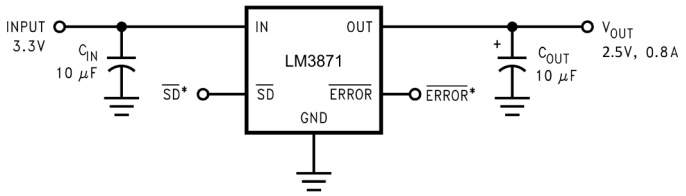

*$\overline{SD}$ and $\overline{ERROR}$ pins must be pulled high through a 10-kΩ pullup resistor. Connect the $\overline{ERROR}$ pin to ground if this function is not used.

Figure 11. LP3871 Typical Application

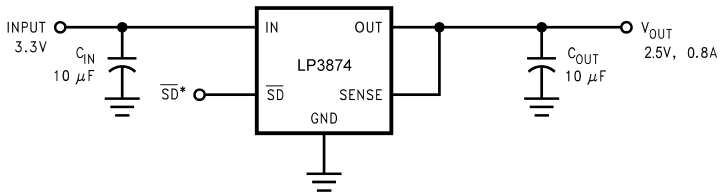

*$\overline{SD}$ must be pulled high through a 10-kΩ pullup resistor.

Figure 12. LP3874 Typical Application

Typical Applications (continued)

8.2.1 Design Requirements

For LP3871 and LP3874 typical applications, use the parameters listed in Table 1.

Table 1. Design Parameters

DESIGN PARAMETER	EXAMPLE VALUE
Input voltage	2.5 V to 7 V
Output voltage	2.5 V
Output current	0.8 A
Output capacitor	10 µF
Input capacitor	10 µF
Output capacitor ESR range	100 mΩ to 4 Ω

8.2.2 Detailed Design Procedure

8.2.2.1 External Capacitors

Like any low-dropout regulator, external capacitors are required to assure stability. These capacitors must be correctly selected for proper performance.

- Input Capacitor: An input capacitor of at least 10 µF is required. Ceramic, tantalum, or Electrolytic capacitors may be used, and capacitance may be increased without limit.
- Output Capacitor: An output capacitor is required for loop stability. It must be located less than 1 cm from the device and connected directly to the output and ground pins using traces which have no other currents flowing through them (see *Layout Guidelines*).

The minimum value of output capacitance that can be used for stable full-load operation is 10 µF, but it may be increased without limit. The output capacitor must have an equivalent series resistance (ESR) value as shown in the stable region of the curve (Figure 13). Tantalum capacitors are recommended for the output capacitor.

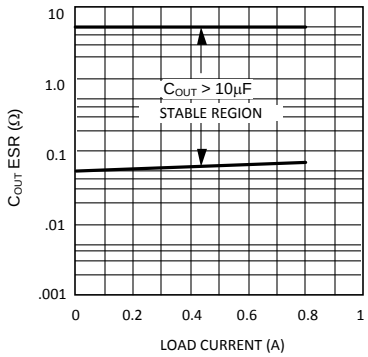

Figure 13. ESR Curve

8.2.2.2 Selecting a Capacitor

It is important to note that capacitance tolerance and variation with temperature must be taken into consideration when selecting a capacitor so that the minimum required amount of capacitance is provided over the full operating temperature range. In general, a good Tantalum capacitor will show very little capacitance variation with temperature, but a ceramic may not be as good (depending on dielectric type). Aluminum electrolytics also typically have large temperature variation of capacitance value.

Equally important to consider is a capacitor's ESR change with temperature: this is not an issue with ceramics, as their ESR is extremely low. However, it is very important in Tantalum and aluminum electrolytic capacitors. Both show increasing ESR at colder temperatures, but the increase in aluminum electrolytic capacitors is so severe they may not be feasible for some applications (see *Capacitor Characteristics*).

Copyright © 2003–2015, Texas Instruments Incorporated

8.2.2.3 Capacitor Characteristics

8.2.2.3.1 Ceramic

For values of capacitance in the 10-µF to 100-µF range, ceramics are usually larger and more costly than tantalum capacitors but give superior AC performance for bypassing high frequency noise because of very low ESR (typically less than 10 mΩ). However, some dielectric types do not have good capacitance characteristics as a function of voltage and temperature.

Z5U and Y5V dielectric ceramics have capacitance that drops severely with applied voltage. A typical Z5U or Y5V capacitor can lose 60% of its rated capacitance with half of the rated voltage applied to it. The Z5U and Y5V also exhibit a severe temperature effect, losing more than 50% of nominal capacitance at high and low limits of the temperature range.

X7R and X5R dielectric ceramic capacitors are strongly recommended if ceramics are used, as they typically maintain a capacitance range within ±20% of nominal over full operating ratings of temperature and voltage. Of course, they are typically larger and more costly than Z5U/Y5U types for a given voltage and capacitance.

8.2.2.3.2 Tantalum

Solid tantalum capacitors are recommended for use on the output because their typical ESR is very close to the ideal value required for loop compensation. They also work well as input capacitors if selected to meet the ESR requirements previously listed.

Tantalums also have good temperature stability: a good quality tantalum will typically show a capacitance value that varies less than 10-15% across the full temperature range of 125°C to −40°C. ESR will vary only about 2X going from the high to low temperature limits.

The increasing ESR at lower temperatures can cause oscillations when marginal quality capacitors are used (if the ESR of the capacitor is near the upper limit of the stability range at room temperature).

8.2.2.3.3 Aluminum

This capacitor type offers the most capacitance for the money. The disadvantages are that they are larger in physical size, not widely available in surface mount, and have poor AC performance (especially at higher frequencies) due to higher ESR and ESL.

Compared by size, the ESR of an aluminum electrolytic is higher than either tantalum or ceramic, and it also varies greatly with temperature. A typical aluminum electrolytic can exhibit an ESR increase of as much as 50× when going from 25°C down to −40°C.

It must also be noted that many aluminum electrolytics only specify impedance at a frequency of 120 Hz, which indicates they have poor high frequency performance. Only aluminum electrolytics that have an impedance specified at a higher frequency (between 20 kHz and 100 kHz) must be used for the LP387X. Derating must be applied to the manufacturer's ESR specification, since it is typically only valid at room temperature.

Any applications using aluminum electrolytics must be thoroughly tested at the lowest ambient operating temperature where ESR is maximum.

8.2.2.4 RFI/EMI Susceptibility

Radio frequency interference (RFI) and electromagnetic interference (EMI) can degrade the performance of any integrated circuit because of the small dimensions of the geometries inside the device. In applications where circuit sources are present which generate signals with significant high frequency energy content (> 1 MHz), care must be taken to ensure that this does not affect the device regulator.

If RFI/EMI noise is present on the input side of the regulator (such as applications where the input source comes from the output of a switching regulator), good ceramic bypass capacitors must be used at the input pin of the device.

If a load is connected to the device output which switches at high speed (such as a clock), the high-frequency current pulses required by the load must be supplied by the capacitors on the device output. Since the bandwidth of the regulator loop is less than 100 kHz, the control circuitry cannot respond to load changes above that frequency. This means the effective output impedance of the device at frequencies above 100 kHz is determined only by the output capacitor(s).

Copyright © 2003–2015, Texas Instruments Incorporated

In applications where the load is switching at high speed, the output of the device may need RF isolation from the load. It is recommended that some inductance be placed between the output capacitor and the load, and good RF bypass capacitors be placed directly across the load.

PCB layout is also critical in high noise environments, since RFI/EMI is easily radiated directly into PC traces. Noisy circuitry must be isolated from "clean" circuits where possible, and grounded through a separate path. At MHz frequencies, ground planes begin to look inductive and RFI/EMI can cause ground bounce across the ground plane.

In multi-layer PCB applications, care must be taken in layout so that noisy power and ground planes do not radiate directly into adjacent layers which carry analog power and ground.

8.2.2.5 Output Noise

Noise is specified in two ways:

- Spot Noise (or Output Noise Density): the RMS sum of all noise sources, measured at the regulator output, at a specific frequency (measured with a 1-Hz bandwidth). This type of noise is usually plotted on a curve as a function of frequency.
- Total Output Noise (or Broad-Band Noise): the RMS sum of spot noise over a specified bandwidth, usually several decades of frequencies.

Attention must be paid to the units of measurement. Spot noise is measured in units $\mu V/\sqrt{Hz}$ or $nV/\sqrt{Hz}$ and total output noise is measured in μV_{RMS}.

The primary source of noise in low-dropout regulators is the internal reference. In CMOS regulators, noise has a low frequency component and a high frequency component, which depend strongly on the silicon area and quiescent current. Noise can be reduced in two ways: by increasing the transistor area or by increasing the current drawn by the internal reference. Increasing the area will decrease the chance of fitting the die into a smaller package. Increasing the current drawn by the internal reference increases the total supply current (ground pin current). Using an optimized trade-off of ground pin current and die size, the LP3871 and LP3874 achieve low noise performance and low quiescent-current operation.

The total output noise specification for LP3871 and LP3874 devices is presented in *Electrical Characteristics*. The output noise density at different frequencies is represented by a curve under *Typical Characteristics*.

Copyright © 2003–2015, Texas Instruments Incorporated

8.2.3 Application Curves

Unless otherwise specified: T_J = 25°C, C_{OUT} = 10 µF, C_{IN} = 10 µF, $\overline{SD}$ pin is tied to V_{IN}, V_{OUT} = 2.5 V, V_{IN} = $V_{O(NOM)}$ + 1 V, I_L = 10 mA.

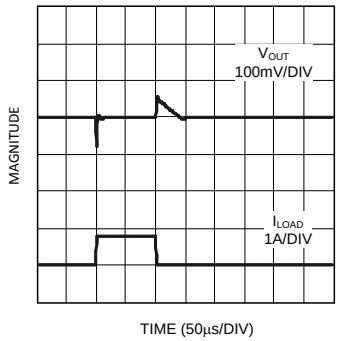

C_{IN} = C_{OUT} = 10 µF, Oscon

Figure 14. Load Transient Response

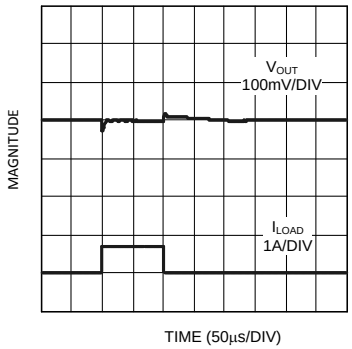

C_{IN} = C_{OUT} = 100 µF, Oscon

Figure 15. Load Transient Response

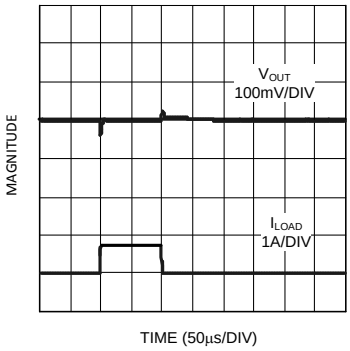

C_{IN} = C_{OUT} = 10 µF, Poscap

Figure 16. Load Transient Response

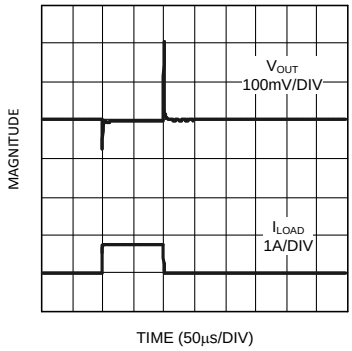

C_{IN} = C_{OUT} = 10 µF, Tantalum

Figure 17. Load Transient Response

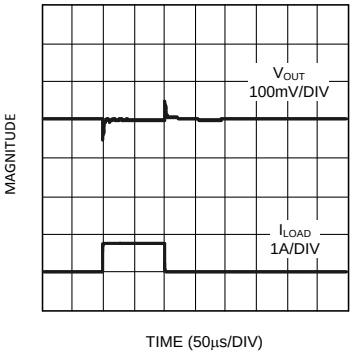

C_{IN} = C_{OUT} = 100 µF, Tantalum

Figure 18. Load Transient Response

9 Power Supply Recommendations

9.1 Power Dissipation

LP3871 and LP3874 can deliver a continuous current of 0.8 A over the full operating temperature range. A heatsink may be required depending on the maximum power dissipation and maximum ambient temperature of the application. Under all possible conditions, the junction temperature must be within the range specified under operating conditions. The total power dissipation of the device is given by:

$$P_D = (V_{IN} - V_{OUT})I_{OUT} + (V_{IN})I_{GND}$$

where

- I_{GND} is the operating ground current of the device (specified under *Electrical Characteristics*). (1)

The maximum allowable temperature rise (T_{Rmax}) depends on the maximum ambient temperature (T_{Amax}) of the application, and the maximum allowable junction temperature (T_{Jmax}):

$$T_{Rmax} = T_{Jmax} - T_{Amax} \quad (2)$$

The maximum allowable value for junction to ambient thermal resistance, $R_{\theta JA}$, can be calculated using the formula:

$$R_{\theta JA} = T_{Rmax} - T_{Amax} / P_D \quad (3)$$

10 Layout

10.1 Layout Guidelines

Good PC layout practices must be used or instability can be induced because of ground loops and voltage drops. The input and output capacitors must be directly connected to the input, output, and ground pins of the regulator using traces which do not have other currents flowing in them (Kelvin connect).

The best way to do this is to lay out C_{IN} and C_{OUT} near the device with short traces to the IN, OUT, and ground pins. The regulator ground pin must be connected to the external circuit ground so that the regulator and its capacitors have a "single point ground".

It must be noted that stability problems have been seen in applications where "vias" to an internal ground plane were used at the ground points of the device and the input and output capacitors. This was caused by varying ground potentials at these nodes resulting from current flowing through the ground plane. Using a single point ground technique for the regulator and its capacitors fixed the problem.

Since high current flows through the traces going into IN and coming from OUT, Kelvin connect the capacitor leads to these pins so there is no voltage drop in series with the input and output capacitors.

10.2 Layout Examples

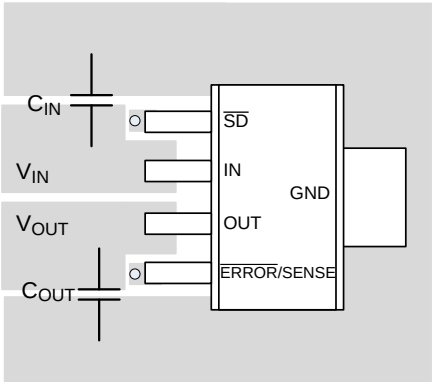

Figure 19. Layout Example for SOT-223 Package

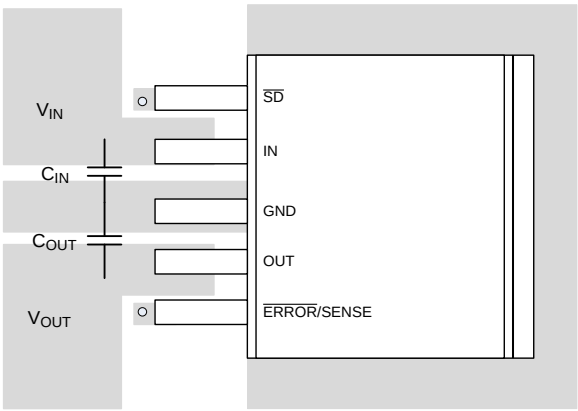

Figure 20. Layout Example for TO-263 Package

Copyright © 2003–2015, Texas Instruments Incorporated

11 Device and Documentation Support

11.1 Related Links

Table 2 lists quick access links. Categories include technical documents, support and community resources, tools and software, and quick access to sample or buy.

Table 2. Related Links

PARTS	PRODUCT FOLDER	SAMPLE & BUY	TECHNICAL DOCUMENTS	TOOLS & SOFTWARE	SUPPORT & COMMUNITY
LP3871	Click here	Click here	Click here	Click here	Click here
LP3874	Click here	Click here	Click here	Click here	Click here

11.2 Community Resources

The following links connect to TI community resources. Linked contents are provided "AS IS" by the respective contributors. They do not constitute TI specifications and do not necessarily reflect TI's views; see TI's Terms of Use.

TI E2E™ Online Community ***TI's Engineer-to-Engineer (E2E) Community.*** Created to foster collaboration among engineers. At e2e.ti.com, you can ask questions, share knowledge, explore ideas and help solve problems with fellow engineers.

Design Support ***TI's Design Support*** Quickly find helpful E2E forums along with design support tools and contact information for technical support.

11.3 Trademarks

E2E is a trademark of Texas Instruments.
All other trademarks are the property of their respective owners.

11.4 Electrostatic Discharge Caution

These devices have limited built-in ESD protection. The leads should be shorted together or the device placed in conductive foam during storage or handling to prevent electrostatic damage to the MOS gates.

11.5 Glossary

SLYZ022 — *TI Glossary*.

This glossary lists and explains terms, acronyms, and definitions.

12 Mechanical, Packaging, and Orderable Information

The following pages include mechanical, packaging, and orderable information. This information is the most current data available for the designated devices. This data is subject to change without notice and revision of this document. For browser-based versions of this data sheet, refer to the left-hand navigation.

PACKAGING INFORMATION

Orderable part number	Status (1)	Material type (2)	Package | Pins	Package qty | Carrier	RoHS (3)	Lead finish/ Ball material (4)	MSL rating/ Peak reflow (5)	Op temp (°C)	Part marking (6)
LP3871EMP-1.8/NOPB	Active	Production	SOT-223 (NDC) | 5	1000 | LARGE T&R	Yes	SN	Level-1-260C-UNLIM	-40 to 125	LH6B
LP3871EMP-1.8/NOPB.A	Active	Production	SOT-223 (NDC) | 5	1000 | LARGE T&R	Yes	SN	Level-1-260C-UNLIM	-40 to 125	LH6B
LP3871EMP-2.5/NOPB	Active	Production	SOT-223 (NDC) | 5	1000 | LARGE T&R	Yes	SN	Level-1-260C-UNLIM	-40 to 125	LH7B
LP3871EMP-2.5/NOPB.A	Active	Production	SOT-223 (NDC) | 5	1000 | LARGE T&R	Yes	SN	Level-1-260C-UNLIM	-40 to 125	LH7B
LP3871EMP-3.3/NOPB	Active	Production	SOT-223 (NDC) | 5	1000 | SMALL T&R	Yes	SN	Level-1-260C-UNLIM	-40 to 125	LH8B
LP3871EMP-3.3/NOPB.A	Active	Production	SOT-223 (NDC) | 5	1000 | SMALL T&R	Yes	SN	Level-1-260C-UNLIM	-40 to 125	LH8B
LP3871EMP-5.0/NOPB	Active	Production	SOT-223 (NDC) | 5	1000 | LARGE T&R	Yes	SN	Level-1-260C-UNLIM	-40 to 125	LH9B
LP3871EMP-5.0/NOPB.A	Active	Production	SOT-223 (NDC) | 5	1000 | LARGE T&R	Yes	SN	Level-1-260C-UNLIM	-40 to 125	LH9B
LP3871EMPX-3.3/NO.A	Active	Production	SOT-223 (NDC) | 5	2000 | LARGE T&R	Yes	SN	Level-1-260C-UNLIM	-40 to 125	LH8B
LP3871EMPX-3.3/NOPB	Active	Production	SOT-223 (NDC) | 5	2000 | LARGE T&R	Yes	SN	Level-1-260C-UNLIM	-40 to 125	LH8B
LP3871ES-1.8/NOPB	Active	Production	DDPAK/ TO-263 (KTT) | 5	45 | TUBE	ROHS Exempt	SN	Level-3-245C-168 HR	-40 to 125	LP3871ES -1.8
LP3871ES-1.8/NOPB.A	Active	Production	DDPAK/ TO-263 (KTT) | 5	45 | TUBE	ROHS Exempt	SN	Level-3-245C-168 HR	-40 to 125	LP3871ES -1.8
LP3871ES-2.5/NOPB	Active	Production	DDPAK/ TO-263 (KTT) | 5	45 | TUBE	ROHS Exempt	SN	Level-3-245C-168 HR	-40 to 125	LP3871ES -2.5
LP3871ES-2.5/NOPB.A	Active	Production	DDPAK/ TO-263 (KTT) | 5	45 | TUBE	ROHS Exempt	SN	Level-3-245C-168 HR	-40 to 125	LP3871ES -2.5
LP3871ES-3.3/NOPB	Active	Production	DDPAK/ TO-263 (KTT) | 5	45 | TUBE	ROHS Exempt	SN	Level-3-245C-168 HR	-40 to 125	LP3871ES -3.3
LP3871ES-3.3/NOPB.A	Active	Production	DDPAK/ TO-263 (KTT) | 5	45 | TUBE	ROHS Exempt	SN	Level-3-245C-168 HR	-40 to 125	LP3871ES -3.3
LP3871ESX-1.8/NOPB	Active	Production	DDPAK/ TO-263 (KTT) | 5	500 | LARGE T&R	ROHS Exempt	SN	Level-3-245C-168 HR	-40 to 125	LP3871ES -1.8
LP3871ESX-1.8/NOPB.A	Active	Production	DDPAK/ TO-263 (KTT) | 5	500 | LARGE T&R	ROHS Exempt	SN	Level-3-245C-168 HR	-40 to 125	LP3871ES -1.8
LP3871ESX-2.5/NOPB	Active	Production	DDPAK/ TO-263 (KTT) | 5	500 | LARGE T&R	ROHS Exempt	SN	Level-3-245C-168 HR	-40 to 125	LP3871ES -2.5
LP3871ESX-2.5/NOPB.A	Active	Production	DDPAK/ TO-263 (KTT) | 5	500 | LARGE T&R	ROHS Exempt	SN	Level-3-245C-168 HR	-40 to 125	LP3871ES -2.5
LP3871ESX-3.3/NOPB	Active	Production	DDPAK/ TO-263 (KTT) | 5	500 | LARGE T&R	ROHS Exempt	SN	Level-3-245C-168 HR	-40 to 125	LP3871ES -3.3

Orderable part number	Status (1)	Material type (2)	Package | Pins	Package qty | Carrier	RoHS (3)	Lead finish/ Ball material (4)	MSL rating/ Peak reflow (5)	Op temp (°C)	Part marking (6)
LP3871ESX-3.3/NOPB.A	Active	Production	DDPAK/ TO-263 (KTT) | 5	500 | LARGE T&R	ROHS Exempt	SN	Level-3-245C-168 HR	-40 to 125	LP3871ES -3.3
LP3874EMP-1.8/NOPB	Active	Production	SOT-223 (NDC) | 5	1000 | SMALL T&R	Yes	SN	Level-1-260C-UNLIM	-40 to 125	LHEB
LP3874EMP-1.8/NOPB.A	Active	Production	SOT-223 (NDC) | 5	1000 | SMALL T&R	Yes	SN	Level-1-260C-UNLIM	-40 to 125	LHEB
LP3874EMP-2.5/NOPB	Active	Production	SOT-223 (NDC) | 5	1000 | LARGE T&R	Yes	SN	Level-1-260C-UNLIM	-40 to 125	LHFB
LP3874EMP-2.5/NOPB.A	Active	Production	SOT-223 (NDC) | 5	1000 | LARGE T&R	Yes	SN	Level-1-260C-UNLIM	-40 to 125	LHFB
LP3874EMP-3.3/NOPB	Active	Production	SOT-223 (NDC) | 5	1000 | SMALL T&R	Yes	SN	Level-1-260C-UNLIM	-40 to 125	LHHB
LP3874EMP-3.3/NOPB.A	Active	Production	SOT-223 (NDC) | 5	1000 | SMALL T&R	Yes	SN	Level-1-260C-UNLIM	-40 to 125	LHHB
LP3874EMP-5.0/NOPB	Active	Production	SOT-223 (NDC) | 5	1000 | SMALL T&R	Yes	SN	Level-1-260C-UNLIM	-40 to 125	LHJB
LP3874EMP-5.0/NOPB.A	Active	Production	SOT-223 (NDC) | 5	1000 | SMALL T&R	Yes	SN	Level-1-260C-UNLIM	-40 to 125	LHJB
LP3874EMPX-1.8/NO.A	Active	Production	SOT-223 (NDC) | 5	2000 | LARGE T&R	Yes	SN	Level-1-260C-UNLIM	-40 to 125	LHEB
LP3874EMPX-1.8/NOPB	Active	Production	SOT-223 (NDC) | 5	2000 | LARGE T&R	Yes	SN	Level-1-260C-UNLIM	-40 to 125	LHEB
LP3874EMPX-3.3/NO.A	Active	Production	SOT-223 (NDC) | 5	2000 | LARGE T&R	Yes	SN	Level-1-260C-UNLIM	-40 to 125	LHHB
LP3874EMPX-3.3/NOPB	Active	Production	SOT-223 (NDC) | 5	2000 | LARGE T&R	Yes	SN	Level-1-260C-UNLIM	-40 to 125	LHHB
LP3874EMPX-5.0/NO.A	Active	Production	SOT-223 (NDC) | 5	2000 | LARGE T&R	Yes	SN	Level-1-260C-UNLIM	-40 to 125	LHJB
LP3874EMPX-5.0/NOPB	Active	Production	SOT-223 (NDC) | 5	2000 | LARGE T&R	Yes	SN	Level-1-260C-UNLIM	-40 to 125	LHJB
LP3874ES-2.5/NOPB	Active	Production	DDPAK/ TO-263 (KTT) | 5	45 | TUBE	ROHS Exempt	SN	Level-3-245C-168 HR	-40 to 125	LP3874ES -2.5
LP3874ES-2.5/NOPB.A	Active	Production	DDPAK/ TO-263 (KTT) | 5	45 | TUBE	ROHS Exempt	SN	Level-3-245C-168 HR	-40 to 125	LP3874ES -2.5
LP3874ES-3.3/NOPB	Active	Production	DDPAK/ TO-263 (KTT) | 5	45 | TUBE	ROHS Exempt	SN	Level-3-245C-168 HR	-40 to 125	LP3874ES -3.3
LP3874ES-3.3/NOPB.A	Active	Production	DDPAK/ TO-263 (KTT) | 5	45 | TUBE	ROHS Exempt	SN	Level-3-245C-168 HR	-40 to 125	LP3874ES -3.3

(1) **Status:** For more details on status, see our product life cycle.

(2) **Material type:** When designated, preproduction parts are prototypes/experimental devices, and are not yet approved or released for full production. Testing and final process, including without limitation quality assurance, reliability performance testing, and/or process qualification, may not yet be complete, and this item is subject to further changes or possible discontinuation. If available for ordering, purchases will be subject to an additional waiver at checkout, and are intended for early internal evaluation purposes only. These items are sold without warranties of any kind.

(3) **RoHS values:** Yes, No, RoHS Exempt. See the TI RoHS Statement for additional information and value definition.

(4) **Lead finish/Ball material:** Parts may have multiple material finish options. Finish options are separated by a vertical ruled line. Lead finish/Ball material values may wrap to two lines if the finish value exceeds the maximum column width.

(5) **MSL rating/Peak reflow:** The moisture sensitivity level ratings and peak solder (reflow) temperatures. In the event that a part has multiple moisture sensitivity ratings, only the lowest level per JEDEC standards is shown. Refer to the shipping label for the actual reflow temperature that will be used to mount the part to the printed circuit board.

(6) **Part marking:** There may be an additional marking, which relates to the logo, the lot trace code information, or the environmental category of the part.

Multiple part markings will be inside parentheses. Only one part marking contained in parentheses and separated by a "~" will appear on a part. If a line is indented then it is a continuation of the previous line and the two combined represent the entire part marking for that device.

Important Information and Disclaimer: The information provided on this page represents TI's knowledge and belief as of the date that it is provided. TI bases its knowledge and belief on information provided by third parties, and makes no representation or warranty as to the accuracy of such information. Efforts are underway to better integrate information from third parties. TI has taken and continues to take reasonable steps to provide representative and accurate information but may not have conducted destructive testing or chemical analysis on incoming materials and chemicals. TI and TI suppliers consider certain information to be proprietary, and thus CAS numbers and other limited information may not be available for release.

In no event shall TI's liability arising out of such information exceed the total purchase price of the TI part(s) at issue in this document sold by TI to Customer on an annual basis.

TAPE AND REEL INFORMATION

REEL DIMENSIONS

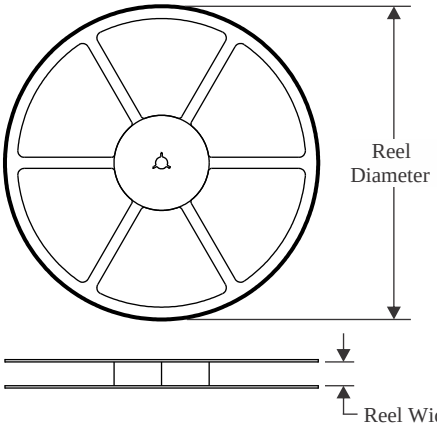

TAPE DIMENSIONS

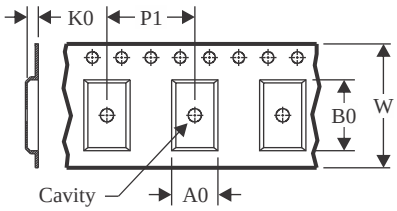

A0	Dimension designed to accommodate the component width
B0	Dimension designed to accommodate the component length
K0	Dimension designed to accommodate the component thickness
W	Overall width of the carrier tape
P1	Pitch between successive cavity centers

QUADRANT ASSIGNMENTS FOR PIN 1 ORIENTATION IN TAPE

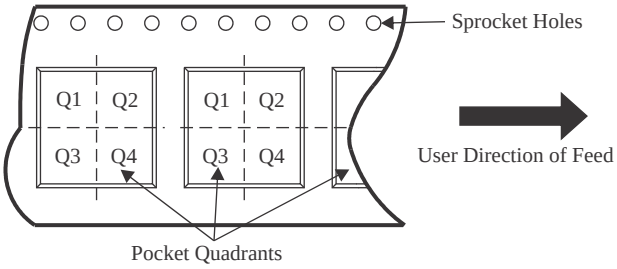

*All dimensions are nominal

Device	Package Type	Package Drawing	Pins	SPQ	Reel Diameter (mm)	Reel Width W1 (mm)	A0 (mm)	B0 (mm)	K0 (mm)	P1 (mm)	W (mm)	Pin1 Quadrant
LP3871EMP-1.8/NOPB	SOT-223	NDC	5	1000	330.0	16.4	7.0	7.5	2.2	12.0	16.0	Q3
LP3871EMP-2.5/NOPB	SOT-223	NDC	5	1000	330.0	16.4	7.0	7.5	2.2	12.0	16.0	Q3
LP3871EMP-3.3/NOPB	SOT-223	NDC	5	1000	330.0	16.4	7.0	7.5	2.2	12.0	16.0	Q3
LP3871EMP-5.0/NOPB	SOT-223	NDC	5	1000	330.0	16.4	7.0	7.5	2.2	12.0	16.0	Q3
LP3871EMPX-3.3/NOPB	SOT-223	NDC	5	2000	330.0	16.4	7.0	7.5	2.2	12.0	16.0	Q3
LP3871ESX-1.8/NOPB	DDPAK/ TO-263	KTT	5	500	330.0	24.4	10.75	14.85	5.0	16.0	24.0	Q2
LP3871ESX-2.5/NOPB	DDPAK/ TO-263	KTT	5	500	330.0	24.4	10.75	14.85	5.0	16.0	24.0	Q2
LP3871ESX-3.3/NOPB	DDPAK/ TO-263	KTT	5	500	330.0	24.4	10.75	14.85	5.0	16.0	24.0	Q2
LP3874EMP-1.8/NOPB	SOT-223	NDC	5	1000	330.0	16.4	7.0	7.5	2.2	12.0	16.0	Q3
LP3874EMP-2.5/NOPB	SOT-223	NDC	5	1000	330.0	16.4	7.0	7.5	2.2	12.0	16.0	Q3
LP3874EMP-3.3/NOPB	SOT-223	NDC	5	1000	330.0	16.4	7.0	7.5	2.2	12.0	16.0	Q3
LP3874EMP-5.0/NOPB	SOT-223	NDC	5	1000	330.0	16.4	7.0	7.5	2.2	12.0	16.0	Q3
LP3874EMPX-1.8/NOPB	SOT-223	NDC	5	2000	330.0	16.4	7.0	7.5	2.2	12.0	16.0	Q3
LP3874EMPX-3.3/NOPB	SOT-223	NDC	5	2000	330.0	16.4	7.0	7.5	2.2	12.0	16.0	Q3

Device	Package Type	Package Drawing	Pins	SPQ	Reel Diameter (mm)	Reel Width W1 (mm)	A0 (mm)	B0 (mm)	K0 (mm)	P1 (mm)	W (mm)	Pin1 Quadrant
LP3874EMPX-5.0/NOPB	SOT-223	NDC	5	2000	330.0	16.4	7.0	7.5	2.2	12.0	16.0	Q3

TAPE AND REEL BOX DIMENSIONS

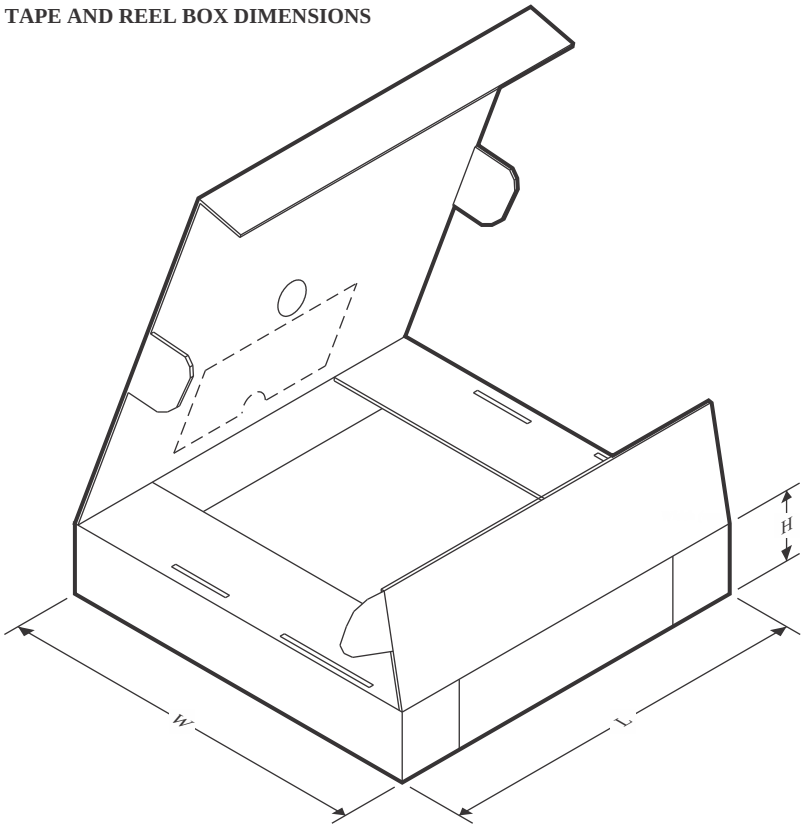

*All dimensions are nominal

Device	Package Type	Package Drawing	Pins	SPQ	Length (mm)	Width (mm)	Height (mm)
LP3871EMP-1.8/NOPB	SOT-223	NDC	5	1000	367.0	367.0	35.0
LP3871EMP-2.5/NOPB	SOT-223	NDC	5	1000	367.0	367.0	35.0
LP3871EMP-3.3/NOPB	SOT-223	NDC	5	1000	367.0	367.0	35.0
LP3871EMP-5.0/NOPB	SOT-223	NDC	5	1000	367.0	367.0	35.0
LP3871EMPX-3.3/NOPB	SOT-223	NDC	5	2000	367.0	367.0	35.0
LP3871ESX-1.8/NOPB	DDPAK/TO-263	KTT	5	500	356.0	356.0	45.0
LP3871ESX-2.5/NOPB	DDPAK/TO-263	KTT	5	500	356.0	356.0	45.0
LP3871ESX-3.3/NOPB	DDPAK/TO-263	KTT	5	500	356.0	356.0	45.0
LP3874EMP-1.8/NOPB	SOT-223	NDC	5	1000	367.0	367.0	35.0
LP3874EMP-2.5/NOPB	SOT-223	NDC	5	1000	367.0	367.0	35.0
LP3874EMP-3.3/NOPB	SOT-223	NDC	5	1000	367.0	367.0	35.0
LP3874EMP-5.0/NOPB	SOT-223	NDC	5	1000	367.0	367.0	35.0
LP3874EMPX-1.8/NOPB	SOT-223	NDC	5	2000	367.0	367.0	35.0
LP3874EMPX-3.3/NOPB	SOT-223	NDC	5	2000	367.0	367.0	35.0
LP3874EMPX-5.0/NOPB	SOT-223	NDC	5	2000	367.0	367.0	35.0

TUBE

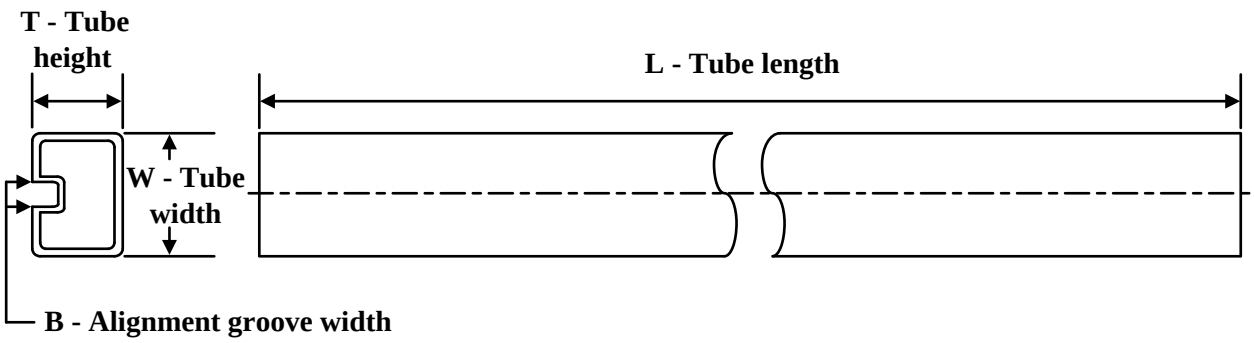

*All dimensions are nominal

Device	Package Name	Package Type	Pins	SPQ	L (mm)	W (mm)	T (µm)	B (mm)
LP3871ES-1.8/NOPB	KTT	TO-263	5	45	502	25	8204.2	9.19
LP3871ES-1.8/NOPB.A	KTT	TO-263	5	45	502	25	8204.2	9.19
LP3871ES-2.5/NOPB	KTT	TO-263	5	45	502	25	8204.2	9.19
LP3871ES-2.5/NOPB.A	KTT	TO-263	5	45	502	25	8204.2	9.19
LP3871ES-3.3/NOPB	KTT	TO-263	5	45	502	25	8204.2	9.19
LP3871ES-3.3/NOPB.A	KTT	TO-263	5	45	502	25	8204.2	9.19
LP3874ES-2.5/NOPB	KTT	TO-263	5	45	502	25	8204.2	9.19
LP3874ES-2.5/NOPB.A	KTT	TO-263	5	45	502	25	8204.2	9.19
LP3874ES-3.3/NOPB	KTT	TO-263	5	45	502	25	8204.2	9.19
LP3874ES-3.3/NOPB.A	KTT	TO-263	5	45	502	25	8204.2	9.19

NDC0005A

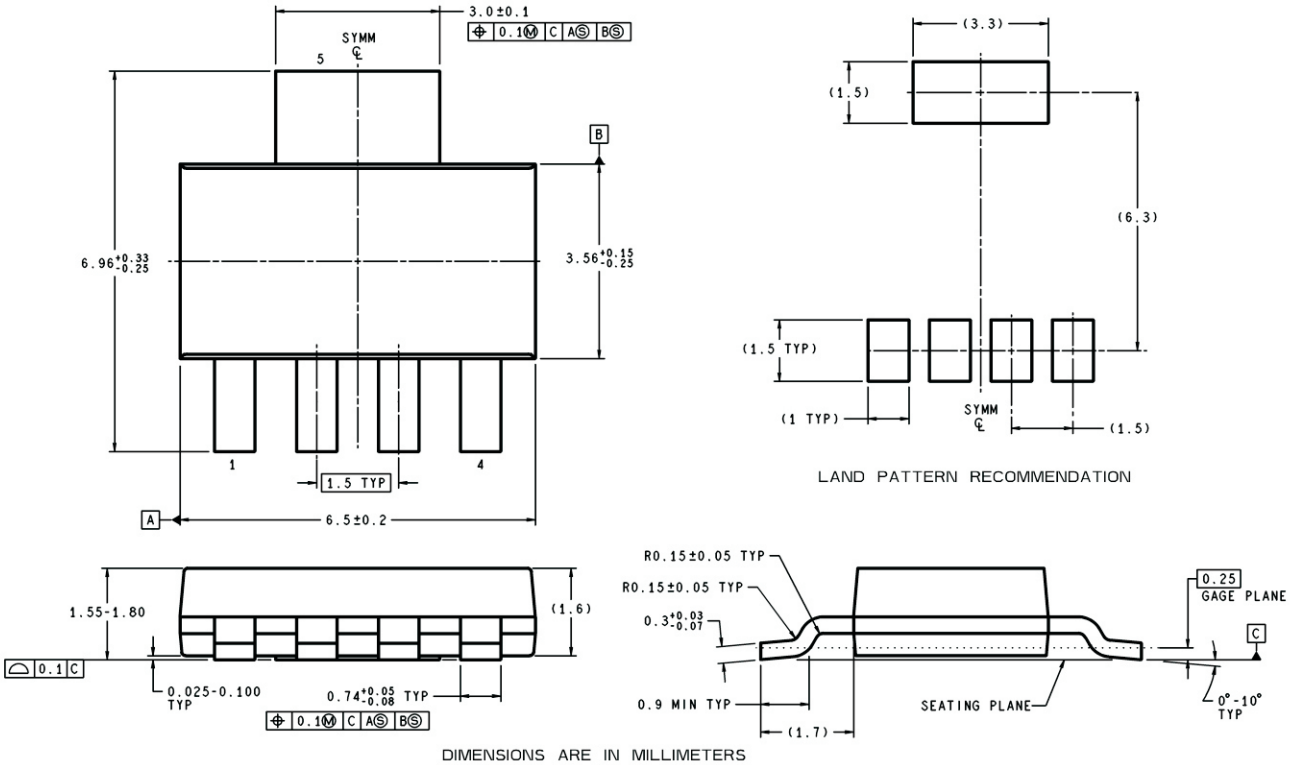
3.0±0.1
0.1 M C A S B S
SYMM
5
B
6.96 +0.33 -0.25
3.56 +0.15 -0.25
1
4
1.5 TYP
A
6.5±0.2
(3.3)
(1.5)
(6.3)
(1.5 TYP)
(1 TYP)
SYMM
(1.5)
LAND PATTERN RECOMMENDATION
1.55-1.80
(1.6)
0.1 C
0.025-0.100 TYP
0.74 +0.05 -0.08 TYP
0.1 M C A S B S
R0.15±0.05 TYP
R0.15±0.05 TYP
0.3 +0.03 -0.07
0.9 MIN TYP
(1.7)
SEATING PLANE
0.25
GAGE PLANE
C
0°-10° TYP
DIMENSIONS ARE IN MILLIMETERS
MP05A (Rev A)

KTT0005B

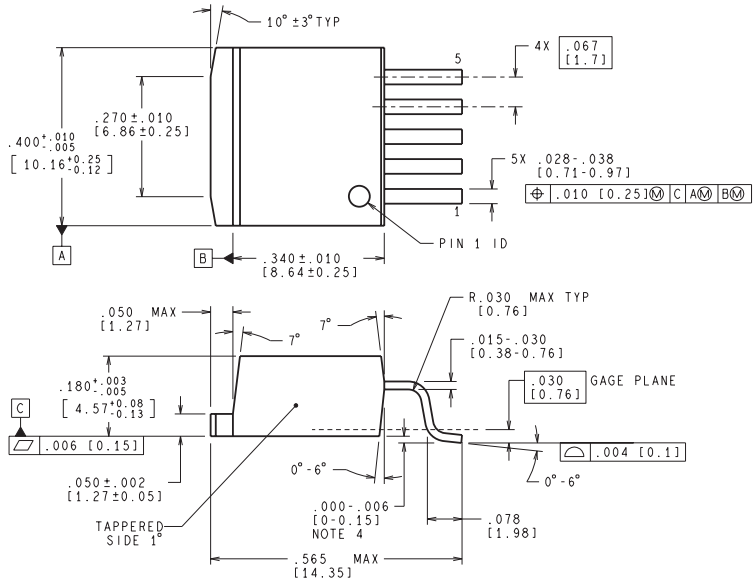

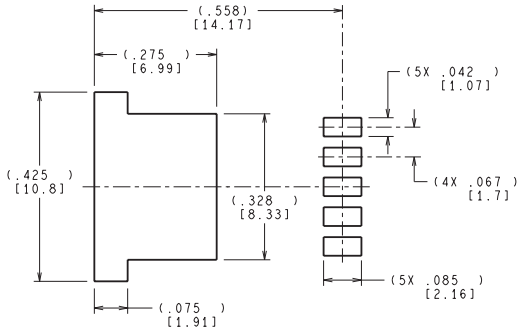

LAND PATTERN RECOMMENDATION

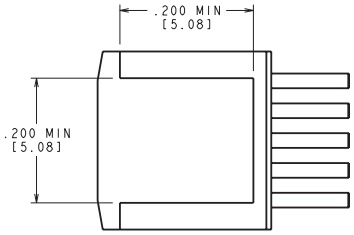

BOTTOM SIDE OF PACKAGE

CONTROLLING DIMENSION IS INCH
VALUES IN [ ] ARE MILLIMETERS
DIMENSIONS IN ( ) FOR REFERENCE ONLY

TS5B (Rev D)

IMPORTANT NOTICE AND DISCLAIMER

TI PROVIDES TECHNICAL AND RELIABILITY DATA (INCLUDING DATASHEETS), DESIGN RESOURCES (INCLUDING REFERENCE DESIGNS), APPLICATION OR OTHER DESIGN ADVICE, WEB TOOLS, SAFETY INFORMATION, AND OTHER RESOURCES “AS IS” AND WITH ALL FAULTS, AND DISCLAIMS ALL WARRANTIES, EXPRESS AND IMPLIED, INCLUDING WITHOUT LIMITATION ANY IMPLIED WARRANTIES OF MERCHANTABILITY, FITNESS FOR A PARTICULAR PURPOSE OR NON-INFRINGEMENT OF THIRD PARTY INTELLECTUAL PROPERTY RIGHTS.

These resources are intended for skilled developers designing with TI products. You are solely responsible for (1) selecting the appropriate TI products for your application, (2) designing, validating and testing your application, and (3) ensuring your application meets applicable standards, and any other safety, security, regulatory or other requirements.

These resources are subject to change without notice. TI grants you permission to use these resources only for development of an application that uses the TI products described in the resource. Other reproduction and display of these resources is prohibited. No license is granted to any other TI intellectual property right or to any third party intellectual property right. TI disclaims responsibility for, and you fully indemnify TI and its representatives against any claims, damages, costs, losses, and liabilities arising out of your use of these resources.

TI’s products are provided subject to TI’s Terms of Sale, TI’s General Quality Guidelines, or other applicable terms available either on ti.com or provided in conjunction with such TI products. TI’s provision of these resources does not expand or otherwise alter TI’s applicable warranties or warranty disclaimers for TI products. Unless TI explicitly designates a product as custom or customer-specified, TI products are standard, catalog, general purpose devices.

TI objects to and rejects any additional or different terms you may propose.

Copyright © 2026, Texas Instruments Incorporated

Last updated 10/2025