MAX3227
3-V TO 5.5-V SINGLE-CHANNEL RS-232 LINE DRIVER/RECEIVER WITH ±15-kV ESD PROTECTION

SLLS673A – AUGUST 2005 – REVISED FEBRUARY 2006

FEATURES

- **Meets or Exceeds the Requirements of TIA/EIA-232-F and ITU v.28 Standards**
- **Operates With 3-V to 5.5-V V_{CC} Supply**
- **Operates at Least 1 Mbit/s**
- **Low Standby Current . . . 1 μA Typ**
- **External Capacitors . . . 4 × 0.1 μF**
- **Accepts 5-V Logic Input With 3.3-V Supply**
- **Designed to Be Interchangeable With Maxim™ MAX3227**
- **Latch-Up Performance Exceeds 100 mA Per JESD 78, Class II**
- **ESD Protection for RS-232 I/O Pins**
  - **– ±15 kV – Human-Body Model**
  - **– ±8 kV – IEC61000-4-2, Contact Discharge**
  - **– ±8 kV – IEC61000-4-2, Air-Gap Discharge**
- **Auto-Powerdown Plus Feature Automatically Disables Drivers for Power Savings**
- **Packaged in Plastic Shrink Small-Outline Package**

APPLICATIONS

- **Battery-Powered, Hand-Held, and Portable Equipment**
- **PDAs and Palmtop PCs**
- **Notebooks, Sub-Notebooks, and Laptops**
- **Digital Cameras**
- **Mobile Phones and Wireless Devices**

DB PACKAGE
(TOP VIEW)

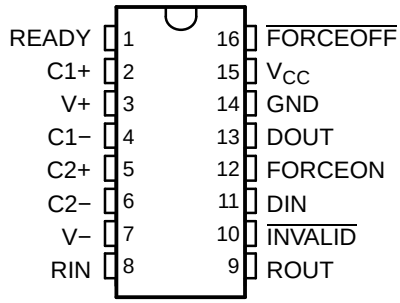

DESCRIPTION/ORDERING INFORMATION

The MAX3227 consists of one line driver, one line receiver, and a dual charge-pump circuit with ±15-kV ESD protection pin to pin (serial-port connection pins, including GND). The device meets the requirements of TIA/EIA-232-F and provides the electrical interface between an asynchronous communication controller and the serial-port connector. The charge pump and four small external capacitors allow operation from a single 3-V to 5.5-V supply. This device operates at data-signaling rates of 1 Mbit/s in normal operating mode and a maximum of 30-V/μs driver output slew rate. This device also features a logic-level output (READY) that asserts when the charge pump is regulating and the device is ready to begin transmitting.

The MAX3227 achieves a 1-μA supply current using the auto-powerdown plus feature. This device automatically enters a low-power powerdown mode when the RS-232 cable is disconnected or the drivers of the connected peripherals are inactive for more than 30 s. They turn on again when they sense a valid transition at any driver or receiver input. Auto-powerdown saves power without changes to the existing BIOS or operating system.

The MAX3227C is characterized for operation from 0°C to 70°C. The MAX3227I is characterized for operation from –40°C to 85°C.

AVAILABLE OPTIONS

T_A	PACKAGED DEVICE
	SHRINK SMALL OUTLINE (DB)(1)
0°C to 70°C	MAX3227CDB
–40°C to 85°C	MAX3227IDB

(1) The DB package is available taped and reeled. Add the suffix R to device type (e.g., MAX3227CDBR).

Please be aware that an important notice concerning availability, standard warranty, and use in critical applications of Texas Instruments semiconductor products and disclaimers thereto appears at the end of this data sheet.

All trademarks are the property of their respective owners.

PRODUCTION DATA information is current as of publication date. Products conform to specifications per the terms of the Texas Instruments standard warranty. Production processing does not necessarily include testing of all parameters.

Copyright © 2005–2006, Texas Instruments Incorporated

FUNCTION TABLE(1)

INPUT CONDITIONS				OUTPUT STATES				OPERATING MODE
FORCEON	$\overline{\text{FORCEOFF}}$	RECEIVER OR DRIVER EDGE WITHIN 30 s	VALID RS-232 LEVEL PRESENT AT RECEIVER	DRIVER	RECEIVER	$\overline{\text{INVALID}}$	READY	
Auto-Powerdown Plus Conditions								
H	H	NO	NO	Active	Active	L	H	Normal operation, auto-powerdown plus disabled
H	H	NO	YES	Active	Active	H	H	Normal operation, auto-powerdown plus disabled
L	H	YES	NO	Active	Active	L	H	Normal operation, auto-powerdown plus enabled
L	H	YES	YES	Active	Active	H	H	Normal operation, auto-powerdown plus enabled
L	H	NO	NO	Z	Active	L	L	Powerdown, auto-powerdown plus enabled
L	H	NO	YES	Z	Active	H	L	Powerdown, auto-powerdown plus enabled
X	L	X	NO	Z	Active	L	L	Manual powerdown
X	L	X	YES	Z	Active	H	L	Manual powerdown
Auto-Powerdown Conditions								
$\overline{\text{INVALID}}$	$\overline{\text{INVALID}}$	X	NO	Z	Active	L	L	Powerdown, auto-powerdown enabled
$\overline{\text{INVALID}}$	$\overline{\text{INVALID}}$	X	YES	Active	Active	H	H	Normal operation, auto-powerdown enabled

(1) H = high level, L = low level, X = irrelevant, Z = high impedance

TERMINAL FUNCTIONS

TERMINAL		DESCRIPTION
NAME	NO.	
C1+	2	Positive terminal of voltage-doubler charge-pump capacitor
C1–	4	Negative terminal of voltage-doubler charge-pump capacitor
C2+	5	Positive terminal of inverting charge-pump capacitor
C2–	6	Negative terminal of inverting charge-pump capacitor
DIN	11	CMOS driver input
DOUT	13	RS-232 driver output
$\overline{\text{FORCEOFF}}$	16	Force-off input, active low. Drive low to shut down drivers, receivers, and charge pump. This overrides auto-shutdown and FORCEON (see Function Table).
FORCEON	12	Force-on input, active high. Drive high to override powerdown, keeping drivers and receivers on (FORCEOFF must be high) (see Function Table).
GND	14	Ground
$\overline{\text{INVALID}}$	10	Valid signal detector output, active low. A logic high indicates that a valid RS-232 level is present on a receiver input.
READY	1	Ready to transmit output, active high. READY is enabled high when V– goes below –3.5 V and the device is ready to transmit.
RIN	8	RS-232 receiver input
ROUT	9	CMOS receiver output
V+	3	$+2 \times V_{CC}$ generated by the charge pump
V–	7	$-2 \times V_{CC}$ generated by the charge pump
V_{CC}	15	3-V to 5.5-V single-supply voltage

LOGIC DIAGRAM (POSITIVE LOGIC)

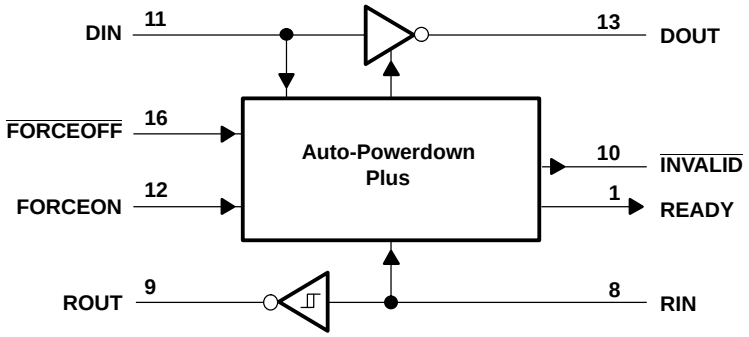

Absolute Maximum Ratings(1)

over operating free-air temperature range (unless otherwise noted)

			MIN	MAX	UNIT
V_{CC}	Supply voltage range(2)		–0.3	6	V
V+	Positive output supply voltage range(2)		–0.3	7	V
V–	Negative output supply voltage range(2)		0.3	–7	V
V+ – V–	Supply voltage difference(2)			13	V
V_I	Input voltage range	Driver ($\overline{\text{FORCEOFF}}$, FORCEON)	–0.3	6	V
		Receiver	–25	25	
V_O	Output voltage range	Driver	–13.2	13.2	V
		Receiver ($\overline{\text{INVALID}}$, READY)	–0.3	V_{CC} + 0.3	
	Short-circuit duration	DOUT to GND		Unlimited	
θ_{JA}	Package thermal impedance(3)			82	°C/W
	Lead temperature 1,6 mm (1/16 in) from case for 10 s			260	°C
T_{stg}	Storage temperature range		–65	150	°C

(1) Stresses beyond those listed under "absolute maximum ratings" may cause permanent damage to the device. These are stress ratings only, and functional operation of the device at these or any other conditions beyond those indicated under "recommended operating conditions" is not implied. Exposure to absolute-maximum-rated conditions for extended periods may affect device reliability.
(2) All voltages are with respect to network GND.
(3) The package thermal impedance is calculated in accordance with JESD 51-7.

Recommended Operating Conditions(1)

See Figure 5

				MIN	NOM	MAX	UNIT
	Supply voltage		V_{CC} = 3.3 V	3	3.3	3.6	V
			V_{CC} = 5 V	4.5	5	5.5	
V_{IH}	Driver and control high-level input voltage	DIN, $\overline{\text{FORCEOFF}}$, FORCEON	V_{CC} = 3.3 V	2		5.5	V
			V_{CC} = 5 V	2.4		5.5	
V_{IL}	Driver and control low-level input voltage	DIN, $\overline{\text{FORCEOFF}}$, FORCEON		0		0.8	V
V_I	Receiver input voltage			–25		25	V
T_A	Operating free-air temperature		MAX3227C	0		70	°C
			MAX3227I	–40		85	

(1) Test conditions are C1–C4 = 0.1 µF at V_{CC} = 3.3 V ± 0.3 V; C1 = 0.047 µF, C2–C4 = 0.33 µF at V_{CC} = 5 V ± 0.5 V.

Electrical Characteristics(1)

over recommended ranges of supply voltage and operating free-air temperature (unless otherwise noted) (see Figure 5)

PARAMETER			TEST CONDITIONS	MIN	TYP(2)	MAX	UNIT
I_I	Input leakage current	$\overline{\text{FORCEOFF}}$, FORCEON			±0.01	±1	µA
I_{CC}	Supply current (T_A = 25°C)	Auto-powerdown plus disabled	No load, $\overline{\text{FORCEOFF}}$ and FORCEON at V_{CC}		0.3	2	mA
		Powered off	No load, $\overline{\text{FORCEOFF}}$ at GND		1	10	µA
		Auto-powerdown plus enabled	No load, $\overline{\text{FORCEOFF}}$ at V_{CC}, FORCEON at GND, All RIN are open or grounded		1	10	

(1) Test conditions are C1–C4 = 0.1 µF at V_{CC} = 3.3 V ± 0.3 V; C1 = 0.047 µF, C2–C4 = 0.33 µF at V_{CC} = 5 V ± 0.5 V.
(2) All typical values are at V_{CC} = 3.3 V or V_{CC} = 5 V, and T_A = 25°C.

DRIVER SECTION

Electrical Characteristics(1)

over recommended ranges of supply voltage and operating free-air temperature (unless otherwise noted)
(see Figure 1 and Figure 2)

PARAMETER		TEST CONDITIONS			MIN	TYP(2)	MAX	UNIT
V_{OH}	High-level output voltage	DOUT at R_L = 3 kΩ to GND,	DIN = GND		5	5.4		V
V_{OL}	Low-level output voltage	DOUT at R_L = 3 kΩ to GND,	DIN = V_{CC}		–5	–5.4		V
I_{IH}	High-level input current	V_I = V_{CC}				±0.01	±1	µA
I_{IL}	Low-level input current	V_I at GND				±0.01	±1	µA
I_{OS}	Short-circuit output current(3)	V_{CC} = 3.6 V,	V_O = 0 V			±35	±60	mA
		V_{CC} = 5.5 V,	V_O = 0 V			±35	±60	
r_o	Output resistance	V_{CC}, V+, and V– = 0 V,	V_O = ±2 V		300	10M		Ω
I_{off}	Output leakage current	$\overline{\text{FORCEOFF}}$ = GND,	V_O = ±12 V,	V_{CC} = 0 to 5.5 V			±25	µA

(1) Test conditions are C1–C4 = 0.1 µF at V_{CC} = 3.3 V ± 0.3 V; C1 = 0.047 µF, C2–C4 = 0.33 µF at V_{CC} = 5 V ± 0.5 V.
(2) All typical values are at V_{CC} = 3.3 V or V_{CC} = 5 V, and T_A = 25°C.
(3) Short-circuit durations should be controlled to prevent exceeding the device absolute power dissipation ratings, and not more than one output should be shorted at a time.

Switching Characteristics(1)

over recommended ranges of supply voltage and operating free-air temperature (unless otherwise noted)
(see Figure 1 and Figure 2)

PARAMETER		TEST CONDITIONS			MIN	TYP(2)	MAX	UNIT
Maximum data rate		C_L = 1000 pF, One DIN switching,	R_L = 3 kΩ, See Figure 1		250			kbit/s
		C_L = 1000 pF, V_{CC} = 4.5 V,	R_L = 3 kΩ, See Figure 1	One DIN switching,	1000			
		C_L = 250 pF, V_{CC} = 3 V,	R_L = 3 kΩ, See Figure 1	One DIN switching,	1000			
$t_{sk(p)}$	Pulse skew(3)	C_L = 150 pF to 2500 pF,	R_L = 3 kΩ to 7 kΩ,	See Figure 2		25		ns
SR(tr)	Slew rate, transition region	V_{CC} = 3.3 V, C_L = 150 pF to 1000 pF,	R_L = 3 kΩ to 7 kΩ, See Figure 1		24		150	V/µs

(1) Test conditions are C1–C4 = 0.1 µF at V_{CC} = 3.3 V ± 0.3 V; C1 = 0.047 µF, C2–C4 = 0.33 µF at V_{CC} = 5 V ± 0.5 V.
(2) All typical values are at V_{CC} = 3.3 V or V_{CC} = 5 V, and T_A = 25°C.
(3) Pulse skew is defined as $|t_{PLH} - t_{PHL}|$ of each channel of the same device.

ESD Protection

TERMINAL		TEST CONDITIONS	TYP	UNIT
NAME	NO.			
DOUT	13	Human-Body Model	±15	kV
		Contact Discharge (IEC61000-4-2)	±8	
		Air-Gap Discharge (IEC61000-4-2)	±8	

RECEIVER SECTION

Electrical Characteristics(1)

over recommended ranges of supply voltage and operating free-air temperature (unless otherwise noted) (see Figure 3)

PARAMETER		TEST CONDITIONS	MIN	TYP(2)	MAX	UNIT
V_{OH}	High-level output voltage	I_{OH} = –1 mA	V_{CC} – 0.6	V_{CC} – 0.1		V
V_{OL}	Low-level output voltage	I_{OL} = 1.6 mA			0.4	V
V_{IT+}	Positive-going input threshold voltage	V_{CC} = 3.3 V		1.5	2.4	V
		V_{CC} = 5 V		1.8	2.4	
$V_{IT–}$	Negative-going input threshold voltage	V_{CC} = 3.3 V	0.6	1.2		V
		V_{CC} = 5 V	0.8	1.5		
V_{hys}	Input hysteresis ($V_{IT+} – V_{IT–}$)			0.5		V
I_{off}	Output leakage current			±0.05	±10	µA
r_i	Input resistance	V_I = ±3 V to ±25 V	3	5	7	kΩ

(1) Test conditions are C1–C4 = 0.1 µF at V_{CC} = 3.3 V ± 0.3 V; C1 = 0.047 µF, C2–C4 = 0.33 µF at V_{CC} = 5 V ± 0.5 V.
(2) All typical values are at V_{CC} = 3.3 V or V_{CC} = 5 V, and T_A = 25°C.

Switching Characteristics(1)

over recommended ranges of supply voltage and operating free-air temperature (unless otherwise noted)

PARAMETER		TEST CONDITIONS	TYP(2)	UNIT
t_{PLH}	Propagation delay time, low- to high-level output	C_L = 150 pF, See Figure 3	150	ns
t_{PHL}	Propagation delay time, high- to low-level output	C_L = 150 pF, See Figure 3	150	ns
$t_{sk(p)}$	Pulse skew(3)	See Figure 3	50	ns

(1) Test conditions are C1–C4 = 0.1 µF at V_{CC} = 3.3 V ± 0.3 V; C1 = 0.047 µF, C2–C4 = 0.33 µF at V_{CC} = 5 V ± 0.5 V.
(2) All typical values are at V_{CC} = 3.3 V or V_{CC} = 5 V, and T_A = 25°C.
(3) Pulse skew is defined as $|t_{PLH} – t_{PHL}|$ of each channel of the same device.

ESD Protection

TERMINAL		TEST CONDITIONS	TYP	UNIT
NAME	NO.			
RIN	8	Human-Body Model	±15	kV
		Contact Discharge (IEC61000-4-2)	±8	
		Air-Gap Discharge (IEC61000-4-2)	±15	

AUTO-POWERDOWN SECTION

Electrical Characteristics

over recommended ranges of supply voltage and operating free-air temperature (unless otherwise noted) (see Figure 4)

PARAMETER		TEST CONDITIONS	MIN	MAX	UNIT
$V_{T+(valid)}$	Receiver input threshold for $\overline{INVALID}$ high-level output voltage	FORCEON = GND, $\overline{FORCEOFF}$ = V_{CC}		2.7	V
$V_{T-(valid)}$	Receiver input threshold for $\overline{INVALID}$ high-level output voltage	FORCEON = GND, $\overline{FORCEOFF}$ = V_{CC}	–2.7		V
$V_{T(invalid)}$	Receiver input threshold for $\overline{INVALID}$ low-level output voltage	FORCEON = GND, $\overline{FORCEOFF}$ = V_{CC}	–0.3	0.3	V
V_{OH}	$\overline{INVALID}$, READY output voltage high	I_{OH} = –1 mA, FORCEON = GND, $\overline{FORCEOFF}$ = V_{CC}	V_{CC} – 0.6		V
V_{OL}	$\overline{INVALID}$, READY output voltage low	I_{OL} = 1.6 mA, FORCEON = GND, $\overline{FORCEOFF}$ = V_{CC}		0.4	V

Switching Characteristics

over recommended ranges of supply voltage and operating free-air temperature (unless otherwise noted) (see Figure 4)

PARAMETER			MIN	TYP(1)	MAX	UNIT
t_{INVH}	Propagation delay time, low- to high-level output			1		µs
t_{INVL}	Propagation delay time, high- to low-level output			30		µs
t_{WU}	Supply enable time			100		µs
$t_{AUTOPRDN}$	Driver or receiver edge to driver's shutdown	V_{CC} = 5 V	15	30	60	s

(1) All typical values are at V_{CC} = 3.3 V or V_{CC} = 5 V, and T_A = 25°C.

PARAMETER MEASUREMENT INFORMATION

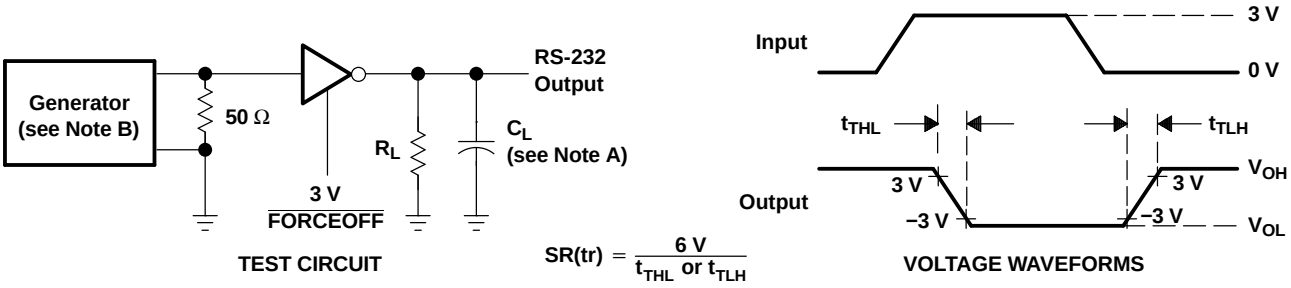

NOTES: A. C_L includes probe and jig capacitance.
B. The pulse generator has the following characteristics: PRR = 250 kbit/s, Z_O = 50 Ω, 50% duty cycle, $t_r \le 10$ ns, $t_f \le 10$ ns.

Figure 1. Driver Slew Rate

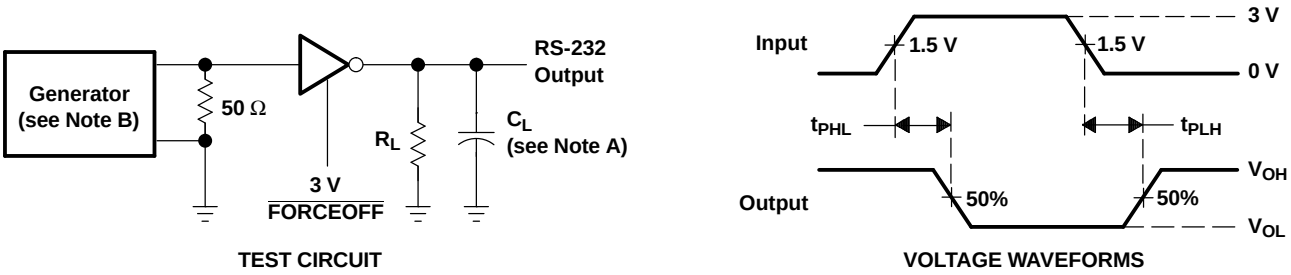

NOTES: A. C_L includes probe and jig capacitance.
B. The pulse generator has the following characteristics: PRR = 250 kbit/s, Z_O = 50 Ω, 50% duty cycle, $t_r \le 10$ ns, $t_f \le 10$ ns.

Figure 2. Driver Pulse Skew

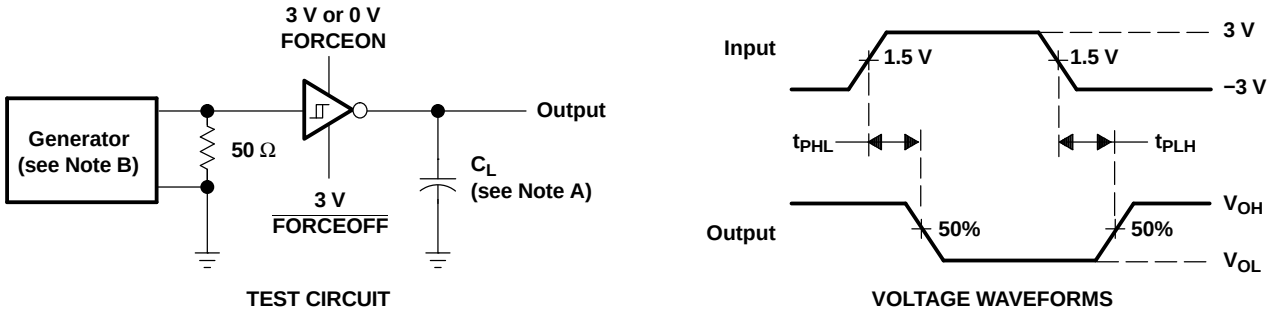

NOTES: A. C_L includes probe and jig capacitance.
B. The pulse generator has the following characteristics: Z_O = 50 Ω, 50% duty cycle, $t_r \le 10$ ns, $t_f \le 10$ ns.

Figure 3. Receiver Propagation Delay Times

PARAMETER MEASUREMENT INFORMATION (continued)

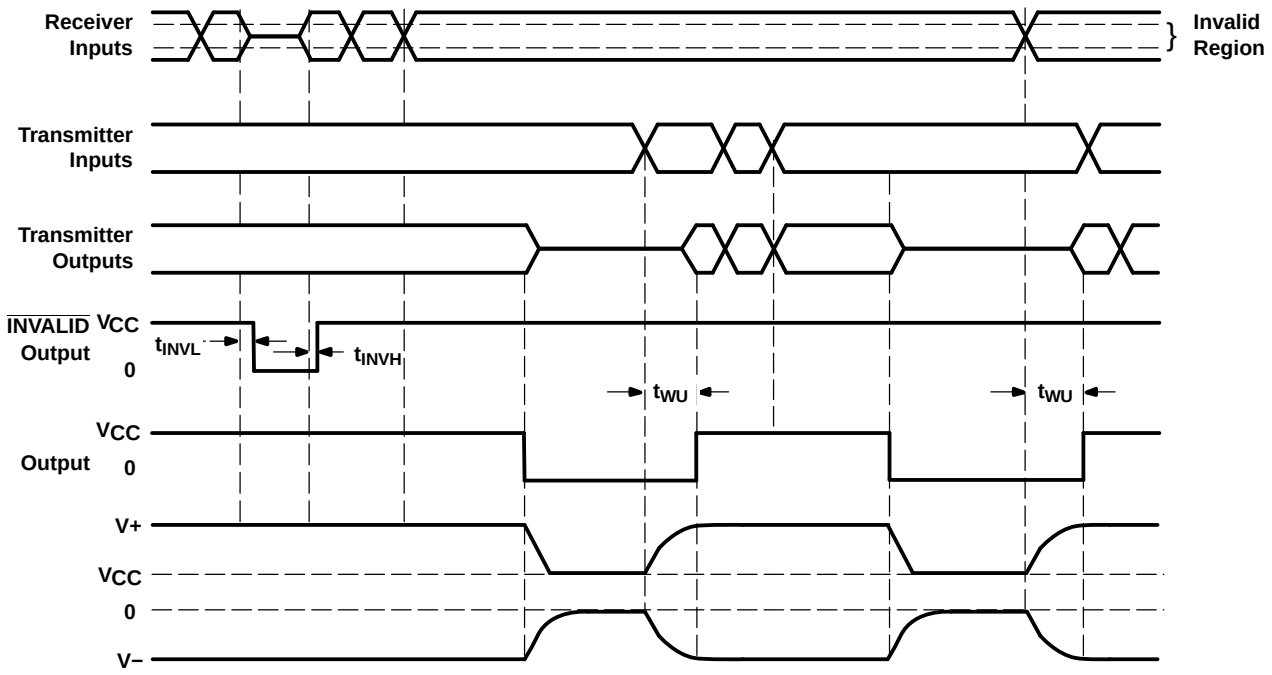

VOLTAGE WAVEFORMS

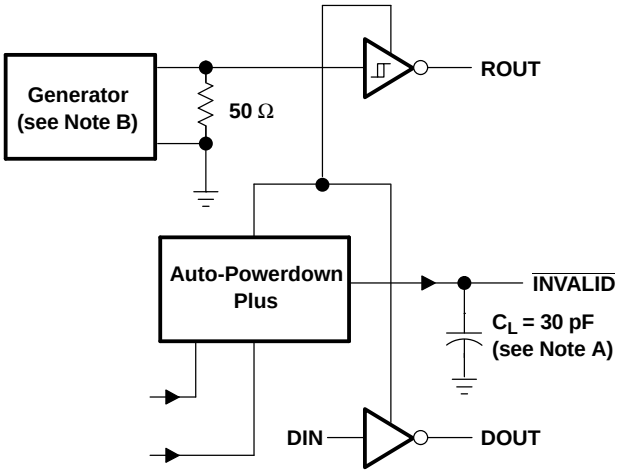

TEST CIRCUIT

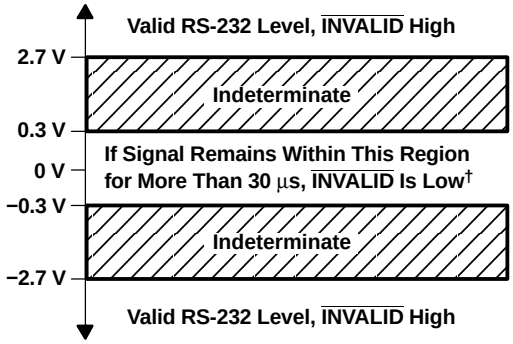

† Auto-powerdown disables drivers and reduces supply current to 1 µA.

Figure 4. INVALID Propagation Delay Times and Driver Enabling Time

APPLICATION INFORMATION

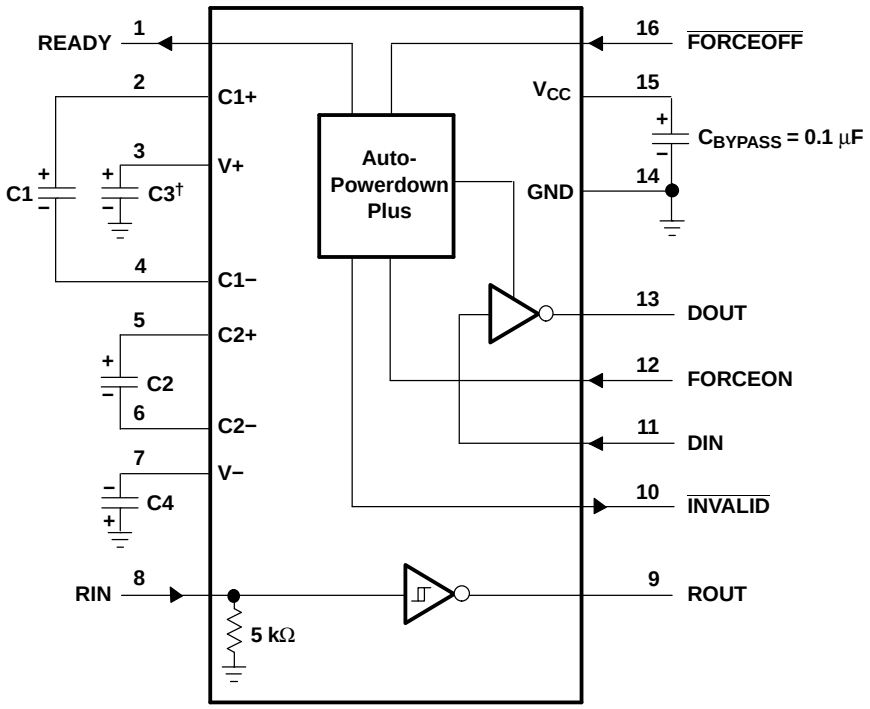

† C3 can be connected to V_{CC} or GND.

NOTES: A. Resistor values shown are nominal.

B. Nonpolarized ceramic capacitors are acceptable. If polarized tantalum or electrolytic capacitors are used, they should be connected as shown.

V_{CC} vs CAPACITOR VALUES

V_{CC}	C1	C2, C3, and C4
3.3 V ± 0.3 V	0.1 µF	0.1 µF
5 V ± 0.5 V	0.047 µF	0.33 µF
3 V to 5.5 V	0.1 µF	0.47 µF

Figure 5. Typical Operating Circuit and Capacitor Values

PACKAGING INFORMATION

Orderable part number	Status (1)	Material type (2)	Package | Pins	Package qty | Carrier	RoHS (3)	Lead finish/ Ball material (4)	MSL rating/ Peak reflow (5)	Op temp (°C)	Part marking (6)
MAX3227CDB	Obsolete	Production	SSOP (DB) | 16	-	-	Call TI	Call TI	0 to 70	MP227C
MAX3227CDBR	Obsolete	Production	SSOP (DB) | 16	-	-	Call TI	Call TI	0 to 70	MP227C
MAX3227IDB	Obsolete	Production	SSOP (DB) | 16	-	-	Call TI	Call TI	-40 to 85	MP227I
MAX3227IDBR	Active	Production	SSOP (DB) | 16	2000 | LARGE T&R	Yes	NIPDAU	Level-1-260C-UNLIM	-40 to 85	MP227I
MAX3227IDBR.A	Active	Production	SSOP (DB) | 16	2000 | LARGE T&R	Yes	NIPDAU	Level-1-260C-UNLIM	-40 to 85	MP227I
MAX3227IDBRG4	Active	Production	SSOP (DB) | 16	2000 | LARGE T&R	Yes	NIPDAU	Level-1-260C-UNLIM	-40 to 85	MP227I
MAX3227IDBRG4.A	Active	Production	SSOP (DB) | 16	2000 | LARGE T&R	Yes	NIPDAU	Level-1-260C-UNLIM	-40 to 85	MP227I

(1) **Status:** For more details on status, see our product life cycle.

(2) **Material type:** When designated, preproduction parts are prototypes/experimental devices, and are not yet approved or released for full production. Testing and final process, including without limitation quality assurance, reliability performance testing, and/or process qualification, may not yet be complete, and this item is subject to further changes or possible discontinuation. If available for ordering, purchases will be subject to an additional waiver at checkout, and are intended for early internal evaluation purposes only. These items are sold without warranties of any kind.

(3) **RoHS values:** Yes, No, RoHS Exempt. See the TI RoHS Statement for additional information and value definition.

(4) **Lead finish/Ball material:** Parts may have multiple material finish options. Finish options are separated by a vertical ruled line. Lead finish/Ball material values may wrap to two lines if the finish value exceeds the maximum column width.

(5) **MSL rating/Peak reflow:** The moisture sensitivity level ratings and peak solder (reflow) temperatures. In the event that a part has multiple moisture sensitivity ratings, only the lowest level per JEDEC standards is shown. Refer to the shipping label for the actual reflow temperature that will be used to mount the part to the printed circuit board.

(6) **Part marking:** There may be an additional marking, which relates to the logo, the lot trace code information, or the environmental category of the part.

Multiple part markings will be inside parentheses. Only one part marking contained in parentheses and separated by a "~" will appear on a part. If a line is indented then it is a continuation of the previous line and the two combined represent the entire part marking for that device.

Important Information and Disclaimer: The information provided on this page represents TI's knowledge and belief as of the date that it is provided. TI bases its knowledge and belief on information provided by third parties, and makes no representation or warranty as to the accuracy of such information. Efforts are underway to better integrate information from third parties. TI has taken and continues to take reasonable steps to provide representative and accurate information but may not have conducted destructive testing or chemical analysis on incoming materials and chemicals. TI and TI suppliers consider certain information to be proprietary, and thus CAS numbers and other limited information may not be available for release.

In no event shall TI's liability arising out of such information exceed the total purchase price of the TI part(s) at issue in this document sold by TI to Customer on an annual basis.

TAPE AND REEL INFORMATION

REEL DIMENSIONS

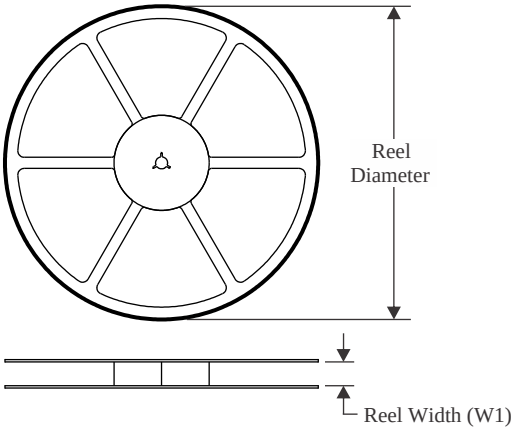

TAPE DIMENSIONS

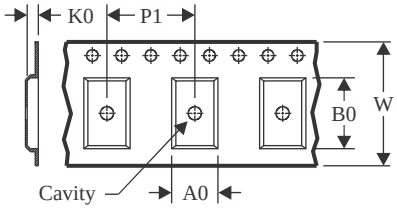

A0	Dimension designed to accommodate the component width
B0	Dimension designed to accommodate the component length
K0	Dimension designed to accommodate the component thickness
W	Overall width of the carrier tape
P1	Pitch between successive cavity centers

QUADRANT ASSIGNMENTS FOR PIN 1 ORIENTATION IN TAPE

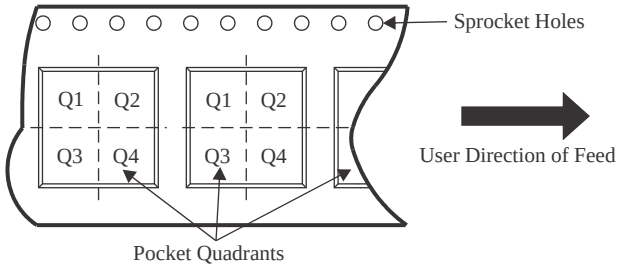

*All dimensions are nominal

Device	Package Type	Package Drawing	Pins	SPQ	Reel Diameter (mm)	Reel Width W1 (mm)	A0 (mm)	B0 (mm)	K0 (mm)	P1 (mm)	W (mm)	Pin1 Quadrant
MAX3227IDBR	SSOP	DB	16	2000	330.0	16.4	8.35	6.6	2.4	12.0	16.0	Q1
MAX3227IDBRG4	SSOP	DB	16	2000	330.0	16.4	8.35	6.6	2.4	12.0	16.0	Q1

TAPE AND REEL BOX DIMENSIONS

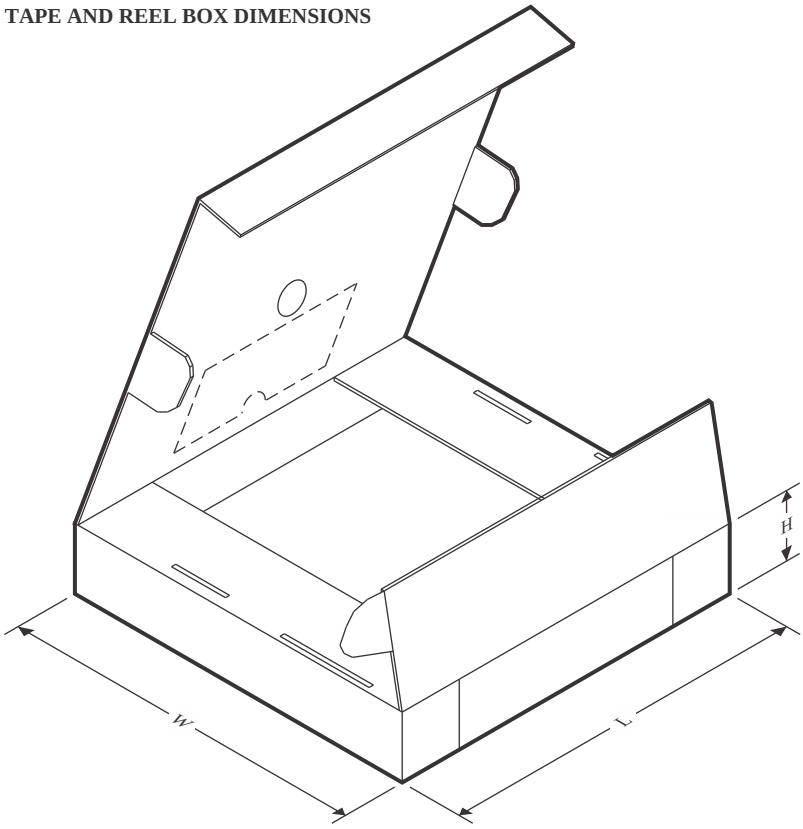

*All dimensions are nominal

Device	Package Type	Package Drawing	Pins	SPQ	Length (mm)	Width (mm)	Height (mm)
MAX3227IDBR	SSOP	DB	16	2000	353.0	353.0	32.0
MAX3227IDBRG4	SSOP	DB	16	2000	353.0	353.0	32.0

PACKAGE OUTLINE

DB0016A

SSOP - 2 mm max height

SMALL OUTLINE PACKAGE

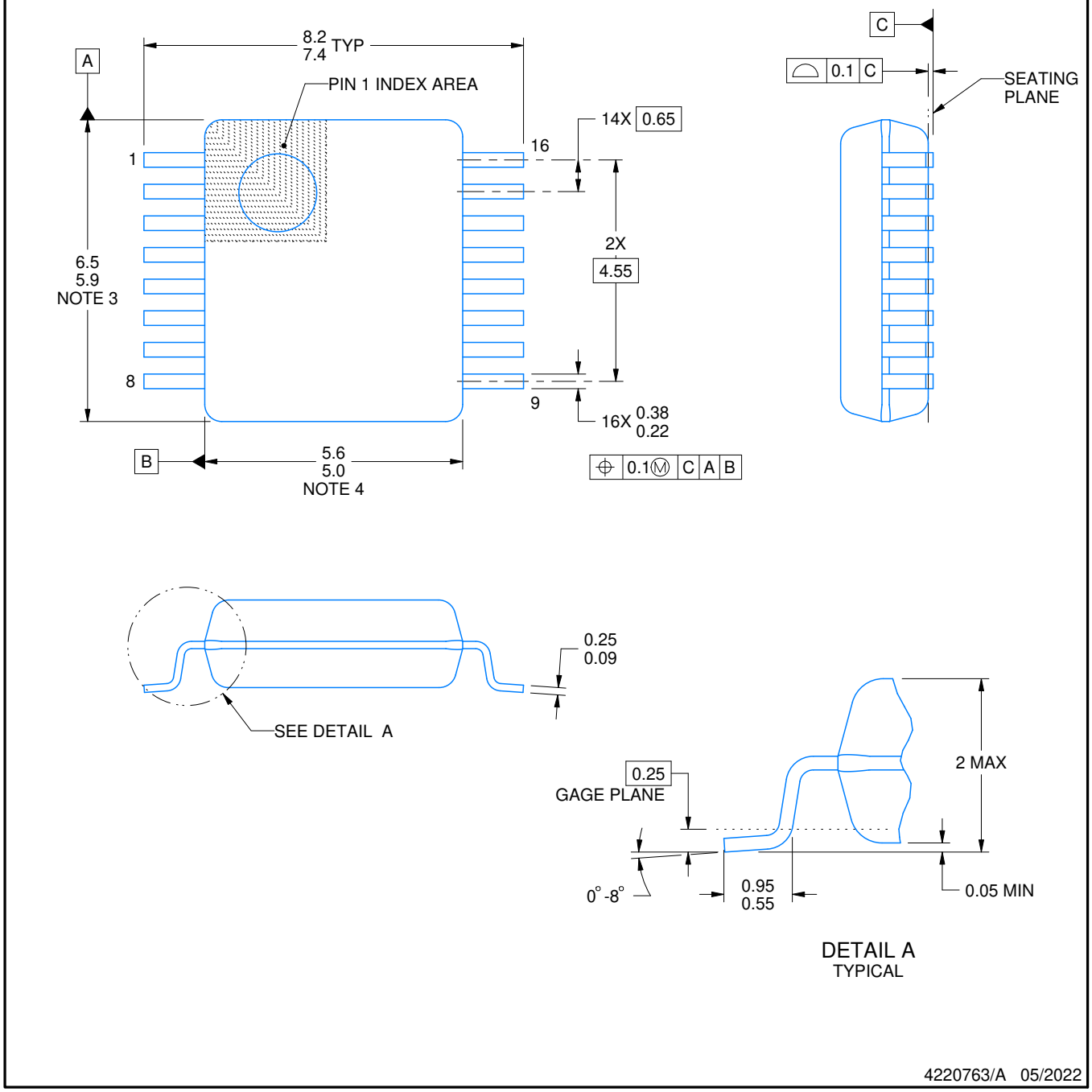

NOTES:

1. All linear dimensions are in millimeters. Any dimensions in parenthesis are for reference only. Dimensioning and tolerancing per ASME Y14.5M.
2. This drawing is subject to change without notice.
3. This dimension does not include mold flash, protrusions, or gate burrs. Mold flash, protrusions, or gate burrs shall not exceed 0.15 mm per side.
4. Reference JEDEC registration MO-150.

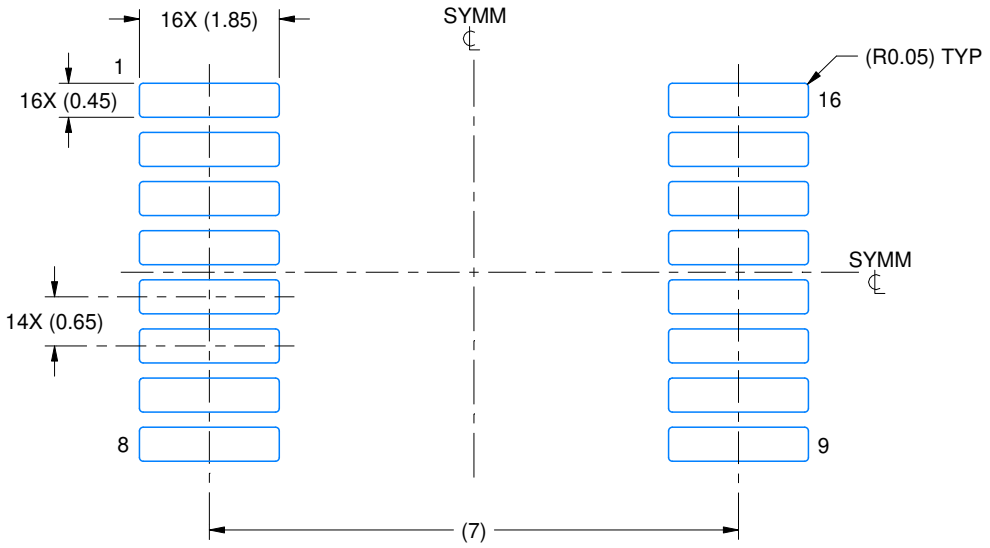

LAND PATTERN EXAMPLE
EXPOSED METAL SHOWN
SCALE: 10X

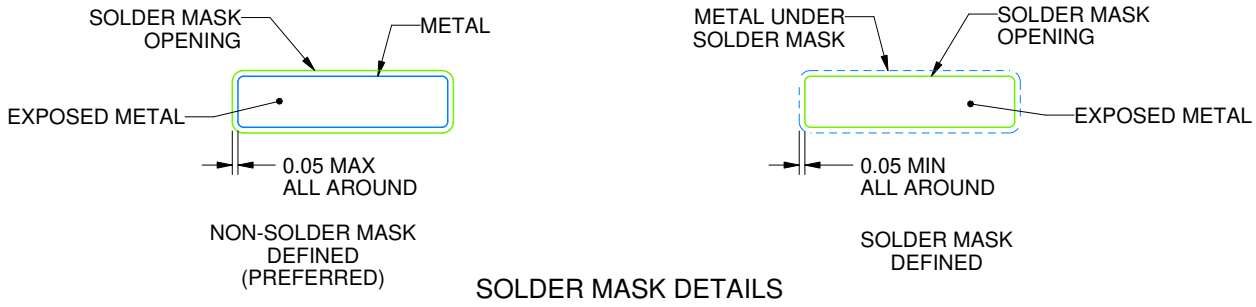

SOLDER MASK DETAILS

4220763/A 05/2022

NOTES: (continued)

5. Publication IPC-7351 may have alternate designs.
6. Solder mask tolerances between and around signal pads can vary based on board fabrication site.

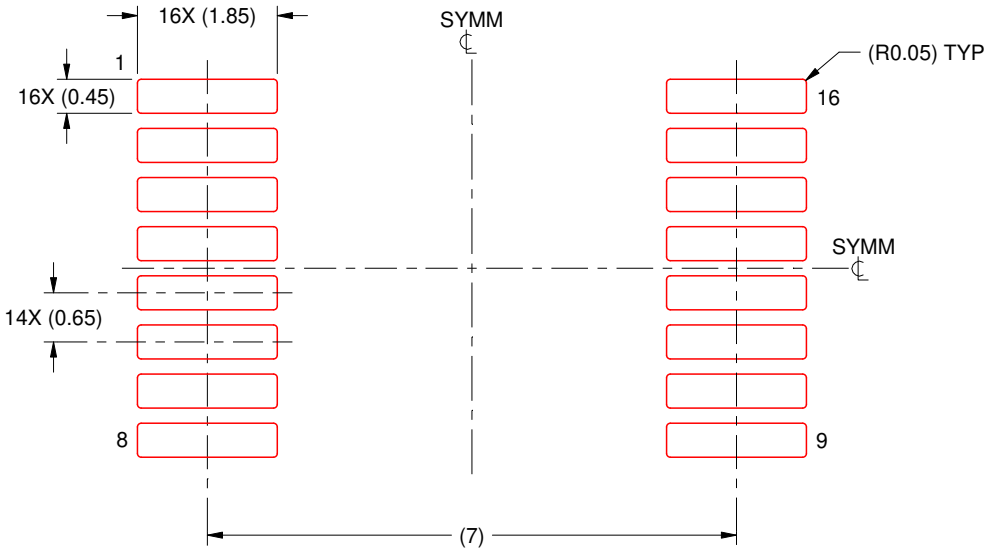

SOLDER PASTE EXAMPLE
BASED ON 0.125 mm THICK STENCIL
SCALE: 10X

4220763/A 05/2022

NOTES: (continued)

7. Laser cutting apertures with trapezoidal walls and rounded corners may offer better paste release. IPC-7525 may have alternate design recommendations.
8. Board assembly site may have different recommendations for stencil design.

IMPORTANT NOTICE AND DISCLAIMER

TI PROVIDES TECHNICAL AND RELIABILITY DATA (INCLUDING DATASHEETS), DESIGN RESOURCES (INCLUDING REFERENCE DESIGNS), APPLICATION OR OTHER DESIGN ADVICE, WEB TOOLS, SAFETY INFORMATION, AND OTHER RESOURCES “AS IS” AND WITH ALL FAULTS, AND DISCLAIMS ALL WARRANTIES, EXPRESS AND IMPLIED, INCLUDING WITHOUT LIMITATION ANY IMPLIED WARRANTIES OF MERCHANTABILITY, FITNESS FOR A PARTICULAR PURPOSE OR NON-INFRINGEMENT OF THIRD PARTY INTELLECTUAL PROPERTY RIGHTS.

These resources are intended for skilled developers designing with TI products. You are solely responsible for (1) selecting the appropriate TI products for your application, (2) designing, validating and testing your application, and (3) ensuring your application meets applicable standards, and any other safety, security, regulatory or other requirements.

These resources are subject to change without notice. TI grants you permission to use these resources only for development of an application that uses the TI products described in the resource. Other reproduction and display of these resources is prohibited. No license is granted to any other TI intellectual property right or to any third party intellectual property right. TI disclaims responsibility for, and you fully indemnify TI and its representatives against any claims, damages, costs, losses, and liabilities arising out of your use of these resources.

TI’s products are provided subject to TI’s Terms of Sale, TI’s General Quality Guidelines, or other applicable terms available either on ti.com or provided in conjunction with such TI products. TI’s provision of these resources does not expand or otherwise alter TI’s applicable warranties or warranty disclaimers for TI products. Unless TI explicitly designates a product as custom or customer-specified, TI products are standard, catalog, general purpose devices.

TI objects to and rejects any additional or different terms you may propose.

Copyright © 2025, Texas Instruments Incorporated

Last updated 10/2025