RS-232 TRANSCEIVER WITH SPLIT SUPPLY PIN FOR LOGIC SIDE

Check for Samples: MAX3386E

FEATURES

- **V_L Pin for Compatibility With Mixed-Voltage Systems Down to 2.5 V on Logic Side**
- **Enhanced ESD Protection on RIN Inputs and DOUT Outputs**
  - **±15-kV Human-Body Model**
  - **±15-kV IEC 61000-4-2, Air-Gap Discharge**
  - **±8-kV IEC 61000-4-2, Contact Discharge**
- **Low 300-µA Supply Current**
- **Specified 250-kbps Data Rate**
- **1-µA Low-Power Shutdown**
- **Meets EIA/TIA-232 Specifications Down to 3 V**

PW OR DW PACKAGE
TOP VIEW

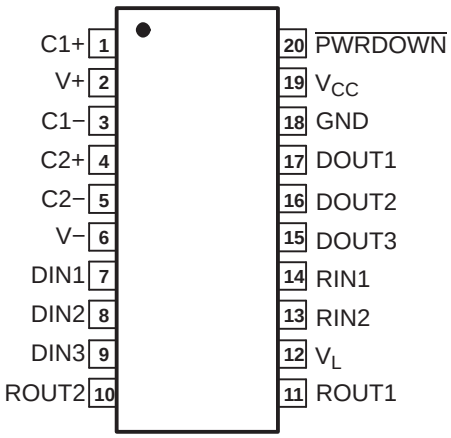

APPLICATIONS

- **Hand-Held Equipment**
- **PDAs**
- **Cell Phones**
- **Battery-Powered Equipment**
- **Data Cables**

DESCRIPTION/ORDERING INFORMATION

The MAX3386E is a three-driver and two-receiver RS-232 interface device, with split supply pins for mixed-signal operations. All RS-232 inputs and outputs are protected to ±15 kV using the IEC 61000-4-2 Air-Gap Discharge method, ±8 kV using the IEC 61000-4-2 Contact Discharge method, and ±15 kV using the Human-Body Model.

The charge pump requires only four small 0.1-µF capacitors for operation from a 3.3-V supply. The MAX3386E is capable of running at data rates up to 250 kbps, while maintaining RS-232-compliant output levels.

The MAX3386E has a unique V_L pin that allows operation in mixed-logic voltage systems. Both driver in (DIN) and receiver out (ROUT) logic levels are pin programmable through the V_L pin. The MAX3386E is available in a space-saving thin shrink small-outline package (TSSOP).

ORDERING INFORMATION

T_A	PACKAGE(1) (2)	ORDERABLE PART NUMBER	TOP-SIDE MARKING
0°C to 70°C	TSSOP – PW	MAX3386ECPWR	MP386EC
	SOIC – DW	MAX3386ECDW	MAX3386EC
–40°C to 85°C	TSSOP – PW	MAX3386EIPWR	MP386EI
	SOIC – DW	MAX3386EIDW	MAX3386EI

(1) Package drawings, standard packing quantities, thermal data, symbolization, and PCB design guidelines are available at www.ti.com/sc/package.
(2) For the most current package and ordering information, see the Package Option Addendum at the end of this document, or see the TI website at www.ti.com.

Please be aware that an important notice concerning availability, standard warranty, and use in critical applications of Texas Instruments semiconductor products and disclaimers thereto appears at the end of this data sheet.

PRODUCTION DATA information is current as of publication date. Products conform to specifications per the terms of the Texas Instruments standard warranty. Production processing does not necessarily include testing of all parameters.

Copyright © 2006–2011, Texas Instruments Incorporated

Table 1. TRUTH TABLE (SHUTDOWN FUNCTION)

$\overline{\text{PWRDWN}}$	DRIVER OUTPUTS	RECEIVER OUTPUTS	CHARGE PUMP
L	High-Z	High-Z	Inactive
H	Active	Active	Active

FUNCTIONAL BLOCK DIAGRAM

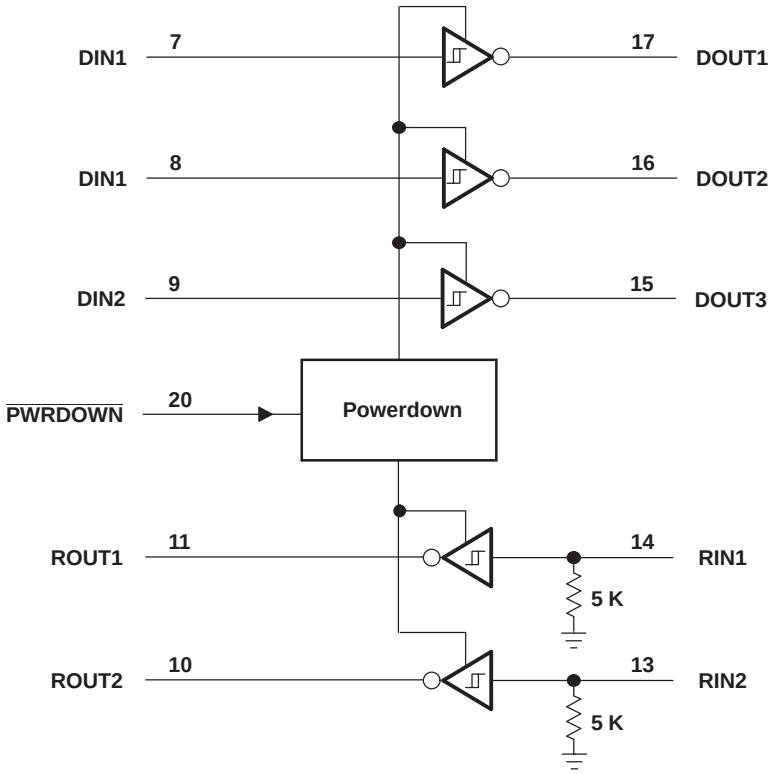

TERMINAL FUNCTIONS

TERMINAL		DESCRIPTION
NAME	NO.	
C1+	1	Positive terminal of the voltage-doubler charge-pump capacitor
V+	2	5.5-V supply generated by the charge pump
C1–	3	Negative terminal of the voltage-doubler charge-pump capacitor
C2+	4	Positive terminal of the inverting charge-pump capacitor
C2–	5	Negative terminal of the inverting charge-pump capacitor
V–	6	–5.5-V supply generated by the charge pump
DIN1 DIN2 DIN3	7 8 9	Driver inputs
ROUT2 ROUT1	10 11	Receiver outputs. Swing between 0 and V_L.
V_L	12	Logic-level supply. All CMOS inputs and outputs are referenced to this supply.
RIN2 RIN1	13 14	RS-232 receiver inputs
DOUT3 DOUT2 DOUT1	15 16 17	RS-232 driver outputs
GND	18	Ground

Copyright © 2006–2011, Texas Instruments Incorporated

TERMINAL FUNCTIONS (continued)

TERMINAL		DESCRIPTION
NAME	NO.	
V_{CC}	19	3-V to 5.5-V supply voltage
$\overline{PWRDWN}$	20	Powerdown input L = Powerdown H = Normal operation

Absolute Maximum Ratings[1]

over operating free-air temperature range (unless otherwise noted)

			MIN	MAX	UNIT
	V_{CC} to GND		–0.3	6	V
	V_L to GND		–0.3	V_{CC} + 0.3	V
	V+ to GND		–0.3	7	V
	V– to GND		0.3	–7	V
	V+ + |V–|[2]			13	V
V_I	Input voltage	DIN, $\overline{PWRDWN}$ to GND	–0.3	6	V
		RIN to GND		±25	
V_O	Output voltage	DOUT to GND		±13.2	V
		ROUT	–0.3	V_L + 0.3	
	Short-circuit duration DOUT to GND			Continuous	
	Continuous power dissipation	T_A = 70°C, 20-pin TSSOP (derate 7 mW/°C above 70°C)		559	mW
T_J	Junction temperature			150	°C
T_{stg}	Storage temperature range		–65	150	°C
	Lead temperature (soldering, 10 s)			300	°C

(1) Stresses beyond those listed under “absolute maximum ratings” may cause permanent damage to the device. These are stress ratings only, and functional operation of the device at these or any other conditions beyond those indicated in the operational sections of the specifications is not implied. Exposure to absolute maximum rating conditions for extended periods may affect device reliability.
(2) V+ and V– can have maximum magnitudes of 7 V, but their absolute difference cannot exceed 13 V.

Recommended Operating Conditions

				MIN	MAX	UNIT
V_{CC}	Supply voltage			3	5.5	V
V_L	Supply voltage			2.25	V_{CC}	V
	Input logic threshold low	DIN, $\overline{PWRDWN}$	V_L = 3 V or 5.5 V		0.8	V
			V_L = 2.3 V		0.6	
	Input logic threshold high	DIN, $\overline{PWRDWN}$	V_L = 5.5 V	2.4		V
			V_L = 3 V	2.0		
			V_L = 2.7 V	1.4		
	Operating temperature		MAX3386ECPWR	0	70	°C
			MAX3386EIPWR	–40	85	
	Receiver input voltage			–25	25	V

Electrical Characteristics

over operating free-air temperature range, V_{CC} = V_L = 3 V to 5.5 V, C1–C4 = 0.1 µF (tested at 3.3 V ± 10%), C1 = 0.047 µF, C2–C4 = 0.33 µF (tested at 5 V ± 10%) (unless otherwise noted)

PARAMETER	TEST CONDITIONS	MIN	TYP[1]	MAX	UNIT
DC Characteristics (V_{CC} = 3.3 V or 5 V, T_A = 25°C)					
Powerdown supply current	$\overline{PWRDWN}$ = GND, All inputs at V_{CC} or GND		1	10	µA

(1) Typical values are at V_{CC} = V_L = 3.3 V, T_A = 25°C.

Copyright © 2006–2011, Texas Instruments Incorporated

Electrical Characteristics (continued)

over operating free-air temperature range, V_{CC} = V_L = 3 V to 5.5 V, C1–C4 = 0.1 µF (tested at 3.3 V ± 10%), C1 = 0.047 µF, C2–C4 = 0.33 µF (tested at 5 V ± 10%) (unless otherwise noted)

PARAMETER	TEST CONDITIONS	MIN	TYP(1)	MAX	UNIT
Supply current	$\overline{PWRDWN}$ = V_{CC}, No load		0.3	1	mA

ESD Protection

PARAMETER	TEST CONDITIONS	TYP	UNIT
RIN, DOUT	Human-Body Model	±15	kV
	IEC 61000-4-2 Air-Gap Discharge	±15	
	IEC 61000-4-2 Contact Discharge	±8	

Copyright © 2006–2011, Texas Instruments Incorporated

RECEIVER SECTION

Electrical Characteristics

over operating free-air temperature range, V_{CC} = V_L = 3 V to 5.5 V, C1–C4 = 0.1 µF (tested at 3.3 V ± 10%), C1 = 0.047 µF, C2–C4 = 0.33 µF (tested at 5 V ± 10%), T_A = T_{MIN} to T_{MAX} (unless otherwise noted)

PARAMETER		TEST CONDITIONS		MIN	TYP(1)	MAX	UNIT
I_{off}	Output leakage current	ROUT, receivers disabled			±0.05	±10	µA
V_{OL}	Output voltage low	I_{OUT} = 1.6 mA				0.4	V
V_{OH}	Output voltage high	I_{OUT} = –1 mA		V_L – 0.6	V_L – 0.1		V
$V_{IT–}$	Input threshold low	T_A = 25°C	V_L = 5 V	0.8	1.2		V
			V_L = 3.3 V	0.6	1.5		
V_{IT+}	Input threshold high	T_A = 25°C	V_L = 5 V		1.8	2.4	V
			V_L = 3.3 V		1.5	2.4	
V_{hys}	Input hysteresis				0.5		V
	Input resistance	T_A = 25°C		3	5	7	kΩ

(1) Typical values are at V_{CC} = V_L = 3.3 V, T_A = 25°C

Switching Characteristics

over operating free-air temperature range, V_{CC} = V_L = 3 V to 5.5 V, C1–C4 = 0.1 µF (tested at 3.3 V ± 10%), C1 = 0.047 µF, C2–C4 = 0.33 µF (tested at 5 V ± 10%), T_A = T_{MIN} to T_{MAX} (unless otherwise noted)

PARAMETER		TEST CONDITIONS	TYP(1)	UNIT
t_{PHL}	Receiver propagation delay	Receiver input to receiver output, C_L = 150 pF	0.15	µs
t_{PLH}			0.15	
$t_{PHL} – t_{PLH}$	Receiver skew		50	ns
t_{en}	Receiver output enable time	From $\overline{PWRDWN}$	200	ns
t_{dis}	Receiver output disable time	From $\overline{PWRDWN}$	200	ns

(1) Typical values are at V_{CC} = V_L = 3.3 V, T_A = 25°C.

Copyright © 2006–2011, Texas Instruments Incorporated

DRIVER SECTION

Electrical Characteristics

over operating free-air temperature range, V_{CC} = V_L = 3 V to 5.5 V, C1–C4 = 0.1 µF (tested at 3.3 V ± 10%), C1 = 0.047 µF, C2–C4 = 0.33 µF (tested at 5 V ± 10%), T_A = T_{MIN} to T_{MAX} (unless otherwise noted)

PARAMETER		TEST CONDITIONS	MIN	TYP(1)	MAX	UNIT
V_{OH}	Output voltage swing	All driver outputs loaded with 3 kΩ to ground	±5	±5.4		V
r_o	Output resistance	V_{CC} = V+ = V– = 0, Driver output = ±2 V	300	10M		Ω
I_{OS}	Output short-circuit current	V_{T_OUT} = 0			±60	mA
I_{OZ}	Output leakage current	V_{T_OUT} = ±12 V, Driver disabled, V_{CC} = 0 or 3 V to 5.5 V			±25	µA
	Driver input hysteresis				0.5	V
	Input leakage current	DIN, $\overline{PWRDWN}$		±0.01	±1	µA

(1) Typical values are at V_{CC} = V_L = 3.3 V, T_A = 25°C

Timing Requirements

over operating free-air temperature range, V_{CC} = V_L = 3 V to 5.5 V, C1–C4 = 0.1 µF (tested at 3.3 V ± 10%), C1 = 0.047 µF, C2–C4 = 0.33 µF (tested at 5 V ± 10%), T_A = T_{MIN} to T_{MAX} (unless otherwise noted)

PARAMETER				MIN	TYP(1)	MAX	UNIT
	Maximum data rate	R_L = 3 kΩ, C_L = 1000 pF, One driver switching		250			kbps
	Time-to-exit powerdown	$\|V_{T_OUT}\|$ > 3.7 V			100		µs
$\|t_{PHL} - t_{PLH}\|$	Driver skew(2)				100		ns
	Transition-region slew rate	V_{CC} = 3.3 V, T_A = 25°C, R_L = 3 kΩ to 7 kΩ, Measured from 3 V to –3 V or –3 V to 3 V	C_L = 150 pF to 1000 pF	6		30	V/µs
			C_L = 150 pF to 2500 pF	4		30	

(1) Typical values are at V_{CC} = V_L = 3.3 V, T_A = 25°C.
(2) Driver skew is measured at the driver zero crosspoint.

ESD Protection

PARAMETER	TEST CONDITIONS	TYP	UNIT
RIN, DOUT	Human-Body Model	±15	kV
	IEC 61000-4-2 Air-Gap Discharge	±15	
	IEC 61000-4-2 Contact Discharge	±8	

Copyright © 2006–2011, Texas Instruments Incorporated

APPLICATION INFORMATION

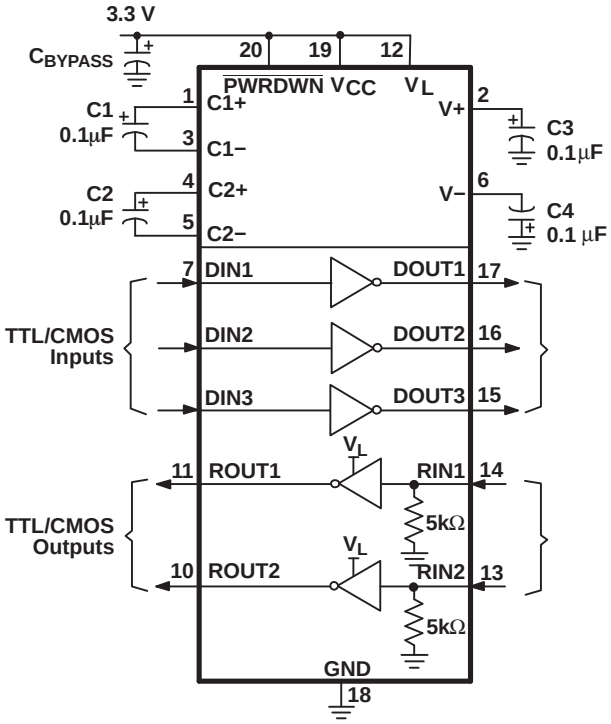

PARAMETER MEASUREMENT INFORMATION

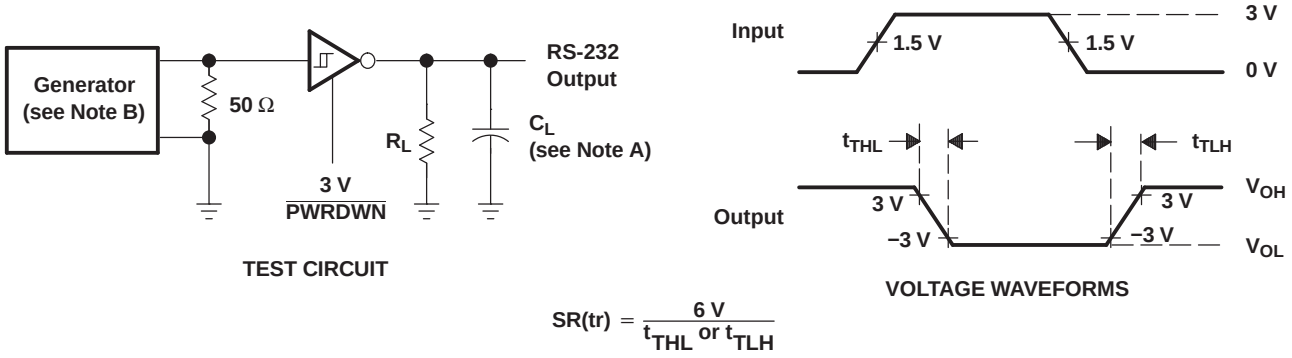

NOTES: A. C_L includes probe and jig capacitance.
B. The pulse generator has the following characteristics: PRR = 250 kbit/s, Z_O = 50 Ω, 50% duty cycle, $t_r \le 10$ ns, $t_f \le 10$ ns.

Figure 1. Driver Slew Rate

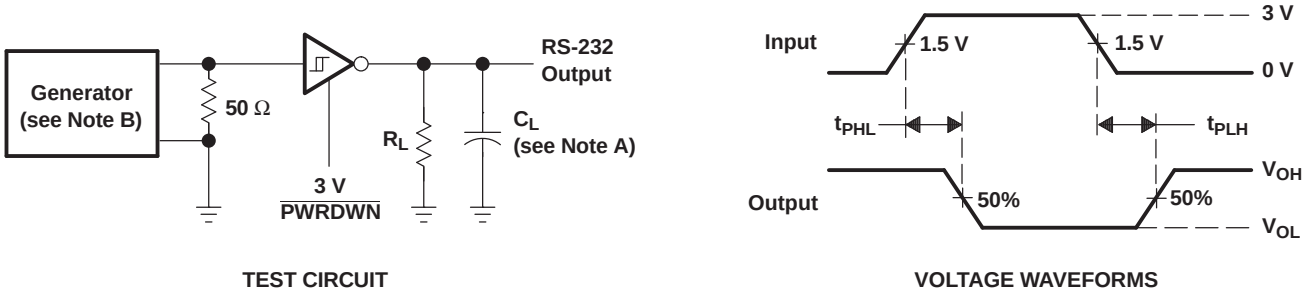

NOTES: A. C_L includes probe and jig capacitance.
B. The pulse generator has the following characteristics: PRR = 250 kbit/s, Z_O = 50 Ω, 50% duty cycle, $t_r \le 10$ ns, $t_f \le 10$ ns.

Figure 2. Driver Pulse Skew

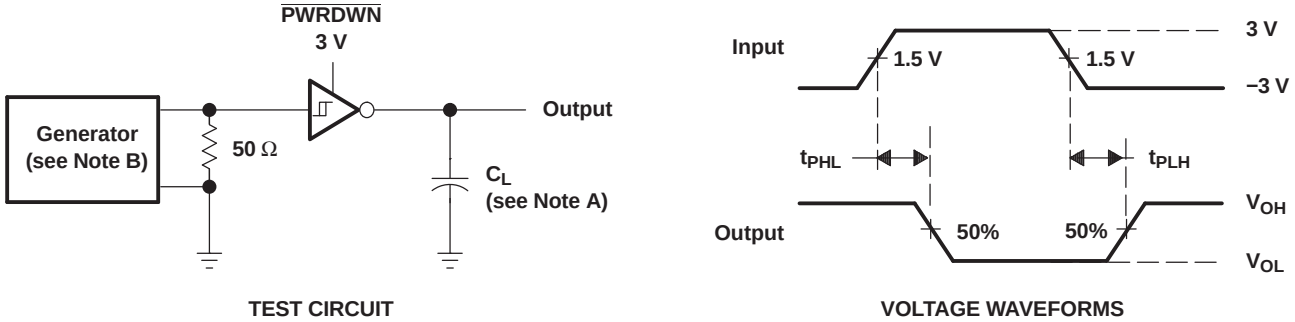

NOTES: A. C_L includes probe and jig capacitance.
B. The pulse generator has the following characteristics: Z_O = 50 Ω, 50% duty cycle, $t_r \le 10$ ns, $t_f \le 10$ ns.

Figure 3. Receiver Propagation Delay Times

Copyright © 2006–2011, Texas Instruments Incorporated

PARAMETER MEASUREMENT INFORMATION

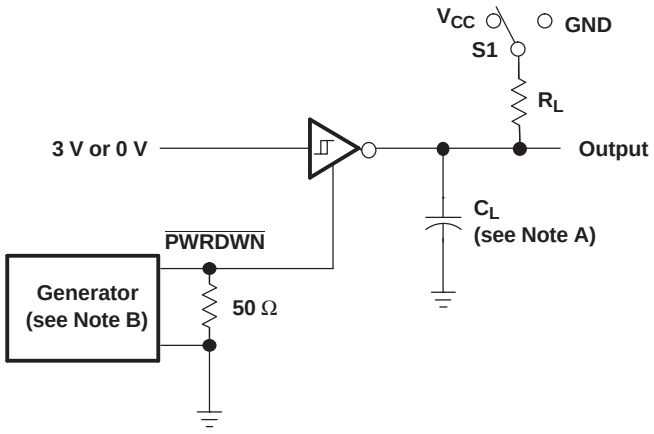

TEST CIRCUIT

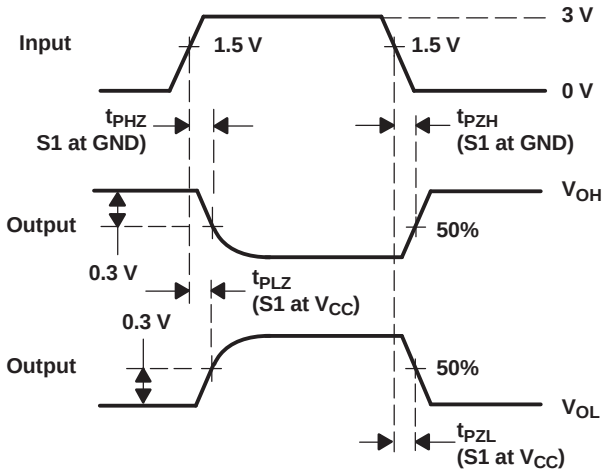

VOLTAGE WAVEFORMS

NOTES: A. C_L includes probe and jig capacitance.
B. The pulse generator has the following characteristics: Z_O = 50 Ω, 50% duty cycle, $t_r \leq 10$ ns, $t_f \leq 10$ ns.

Figure 4. Receiver Enable and Disable Times

REVISION HISTORY

Changes from Revision A (November 2008) to Revision B	Page
• Changed V_L Pin for Compatibility With Mixed-Voltage Systems Down to 2.5 V (originally 1.8 V) on the Logic Side	1
• Changed V_L Supply MIN value from 1.65 V to 2.25 V.	3
• Deleted V_L = 1.65V parameter from Input logic threshold low.	3
• Deleted V_L = 1.95V parameter from Input logic threshold high.	3

Copyright © 2006–2011, Texas Instruments Incorporated

PACKAGING INFORMATION

Orderable part number	Status (1)	Material type (2)	Package | Pins	Package qty | Carrier	RoHS (3)	Lead finish/ Ball material (4)	MSL rating/ Peak reflow (5)	Op temp (°C)	Part marking (6)
MAX3386ECDWR	Active	Production	SOIC (DW) | 20	2000 | LARGE T&R	Yes	NIPDAU	Level-1-260C-UNLIM	0 to 70	MAX3386EC
MAX3386ECDWR.A	Active	Production	SOIC (DW) | 20	2000 | LARGE T&R	Yes	NIPDAU	Level-1-260C-UNLIM	0 to 70	MAX3386EC
MAX3386ECPW	Obsolete	Production	TSSOP (PW) | 20	-	-	Call TI	Call TI	0 to 70	MP386EC
MAX3386ECPWR	Obsolete	Production	TSSOP (PW) | 20	-	-	Call TI	Call TI	0 to 70	MP386EC
MAX3386EIDW	Obsolete	Production	SOIC (DW) | 20	-	-	Call TI	Call TI	-40 to 85	MAX3386EI
MAX3386EIDWR	Obsolete	Production	SOIC (DW) | 20	-	-	Call TI	Call TI	-40 to 85	MAX3386EI
MAX3386EIPW	Obsolete	Production	TSSOP (PW) | 20	-	-	Call TI	Call TI	-40 to 85	MP386EI
MAX3386EIPWR	Obsolete	Production	TSSOP (PW) | 20	-	-	Call TI	Call TI	-40 to 85	MP386EI

(1) **Status:** For more details on status, see our product life cycle.

(2) **Material type:** When designated, preproduction parts are prototypes/experimental devices, and are not yet approved or released for full production. Testing and final process, including without limitation quality assurance, reliability performance testing, and/or process qualification, may not yet be complete, and this item is subject to further changes or possible discontinuation. If available for ordering, purchases will be subject to an additional waiver at checkout, and are intended for early internal evaluation purposes only. These items are sold without warranties of any kind.

(3) **RoHS values:** Yes, No, RoHS Exempt. See the TI RoHS Statement for additional information and value definition.

(4) **Lead finish/Ball material:** Parts may have multiple material finish options. Finish options are separated by a vertical ruled line. Lead finish/Ball material values may wrap to two lines if the finish value exceeds the maximum column width.

(5) **MSL rating/Peak reflow:** The moisture sensitivity level ratings and peak solder (reflow) temperatures. In the event that a part has multiple moisture sensitivity ratings, only the lowest level per JEDEC standards is shown. Refer to the shipping label for the actual reflow temperature that will be used to mount the part to the printed circuit board.

(6) **Part marking:** There may be an additional marking, which relates to the logo, the lot trace code information, or the environmental category of the part.

Multiple part markings will be inside parentheses. Only one part marking contained in parentheses and separated by a "~" will appear on a part. If a line is indented then it is a continuation of the previous line and the two combined represent the entire part marking for that device.

Important Information and Disclaimer: The information provided on this page represents TI's knowledge and belief as of the date that it is provided. TI bases its knowledge and belief on information provided by third parties, and makes no representation or warranty as to the accuracy of such information. Efforts are underway to better integrate information from third parties. TI has taken and continues to take reasonable steps to provide representative and accurate information but may not have conducted destructive testing or chemical analysis on incoming materials and chemicals. TI and TI suppliers consider certain information to be proprietary, and thus CAS numbers and other limited information may not be available for release.

In no event shall TI's liability arising out of such information exceed the total purchase price of the TI part(s) at issue in this document sold by TI to Customer on an annual basis.

TAPE AND REEL INFORMATION

REEL DIMENSIONS

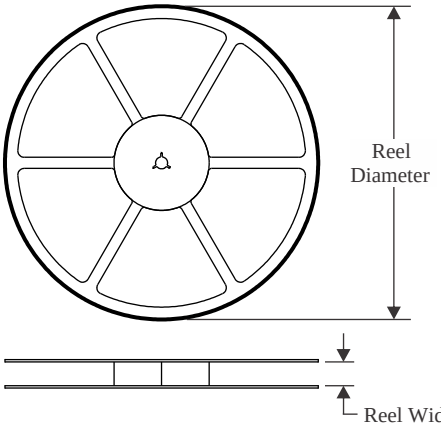

TAPE DIMENSIONS

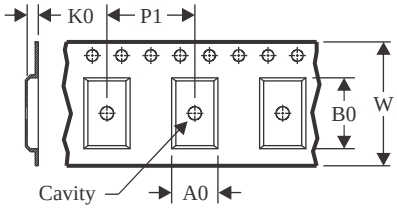

A0	Dimension designed to accommodate the component width
B0	Dimension designed to accommodate the component length
K0	Dimension designed to accommodate the component thickness
W	Overall width of the carrier tape
P1	Pitch between successive cavity centers

QUADRANT ASSIGNMENTS FOR PIN 1 ORIENTATION IN TAPE

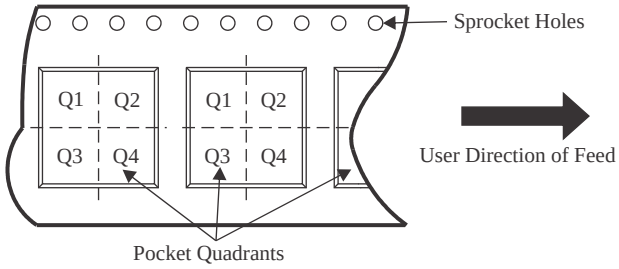

*All dimensions are nominal

Device	Package Type	Package Drawing	Pins	SPQ	Reel Diameter (mm)	Reel Width W1 (mm)	A0 (mm)	B0 (mm)	K0 (mm)	P1 (mm)	W (mm)	Pin1 Quadrant
MAX3386ECDWR	SOIC	DW	20	2000	330.0	24.4	10.8	13.3	2.7	12.0	24.0	Q1

TAPE AND REEL BOX DIMENSIONS

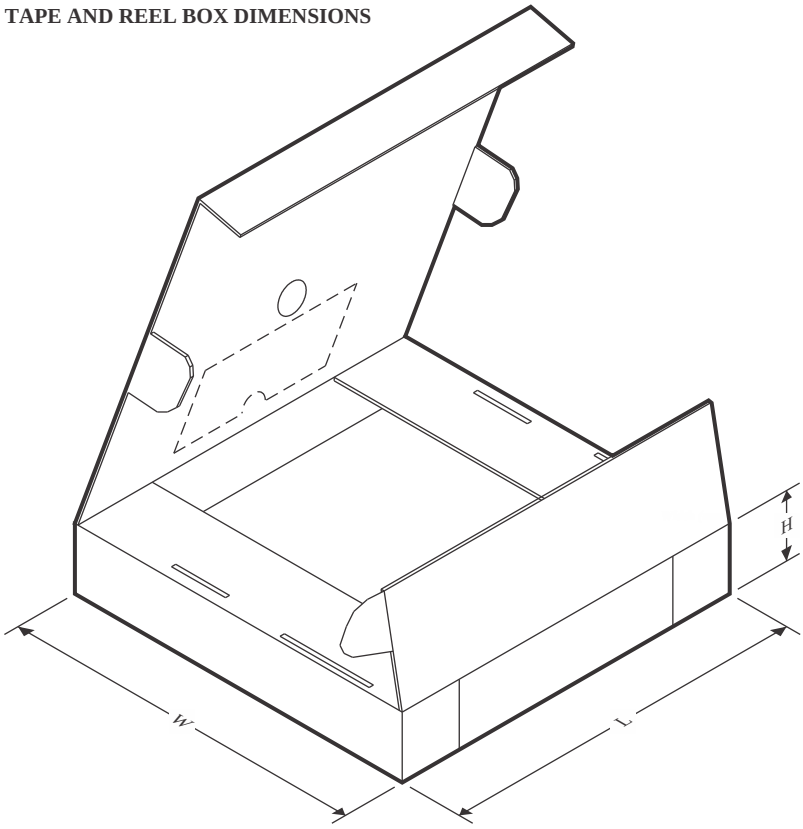

*All dimensions are nominal

Device	Package Type	Package Drawing	Pins	SPQ	Length (mm)	Width (mm)	Height (mm)
MAX3386ECDWR	SOIC	DW	20	2000	356.0	356.0	45.0

PACKAGE OUTLINE

PW0020A

TSSOP - 1.2 mm max height

SMALL OUTLINE PACKAGE

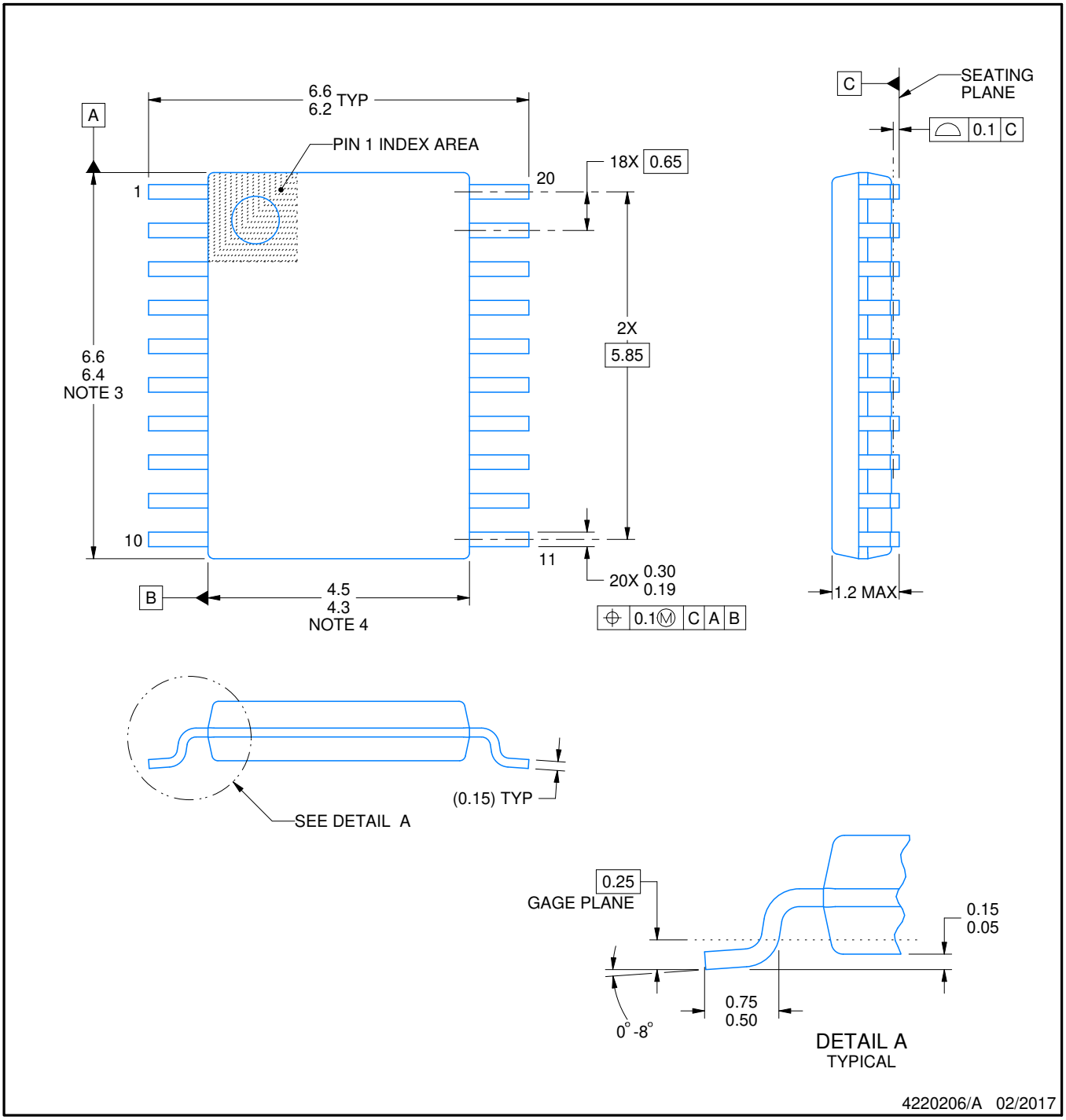

NOTES:

1. All linear dimensions are in millimeters. Any dimensions in parenthesis are for reference only. Dimensioning and tolerancing per ASME Y14.5M.
2. This drawing is subject to change without notice.
3. This dimension does not include mold flash, protrusions, or gate burrs. Mold flash, protrusions, or gate burrs shall not exceed 0.15 mm per side.
4. This dimension does not include interlead flash. Interlead flash shall not exceed 0.25 mm per side.
5. Reference JEDEC registration MO-153.

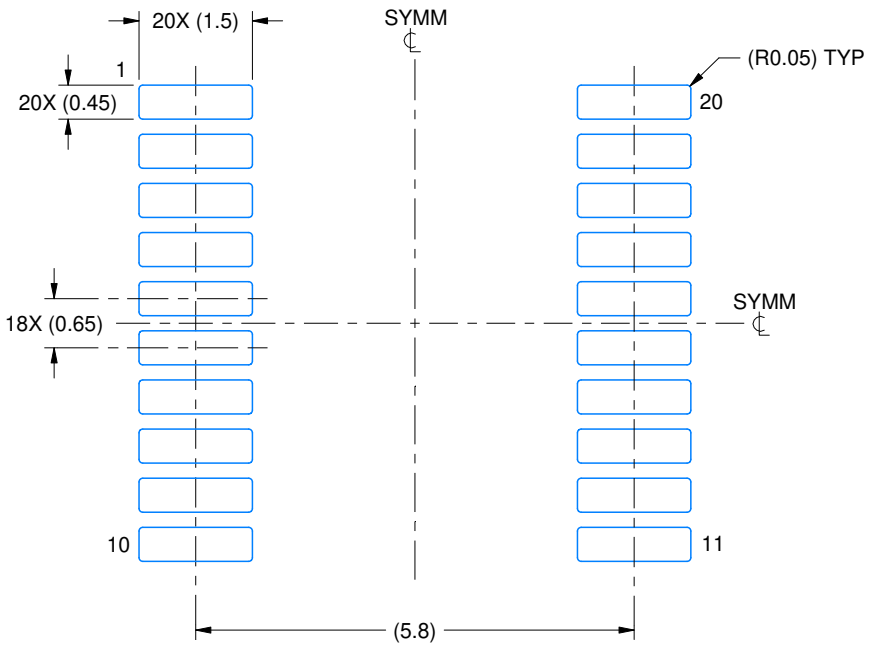

LAND PATTERN EXAMPLE
EXPOSED METAL SHOWN
SCALE: 10X



SOLDER MASK DETAILS

4220206/A 02/2017

NOTES: (continued)

6. Publication IPC-7351 may have alternate designs.
7. Solder mask tolerances between and around signal pads can vary based on board fabrication site.

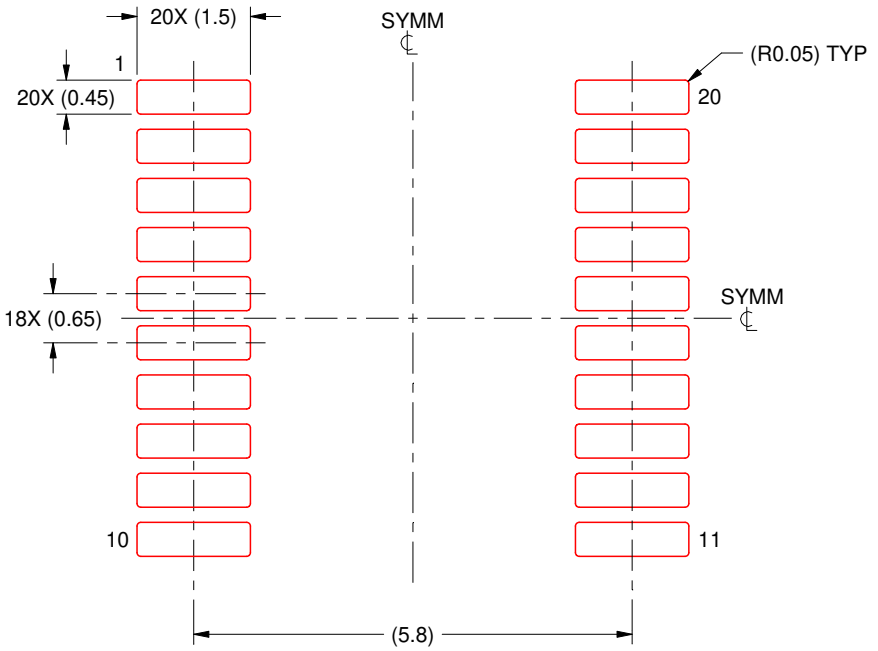

SOLDER PASTE EXAMPLE
BASED ON 0.125 mm THICK STENCIL
SCALE: 10X

4220206/A 02/2017

NOTES: (continued)

8. Laser cutting apertures with trapezoidal walls and rounded corners may offer better paste release. IPC-7525 may have alternate design recommendations.
9. Board assembly site may have different recommendations for stencil design.



PACKAGE OUTLINE

DW0020A

SOIC - 2.65 mm max height

SOIC

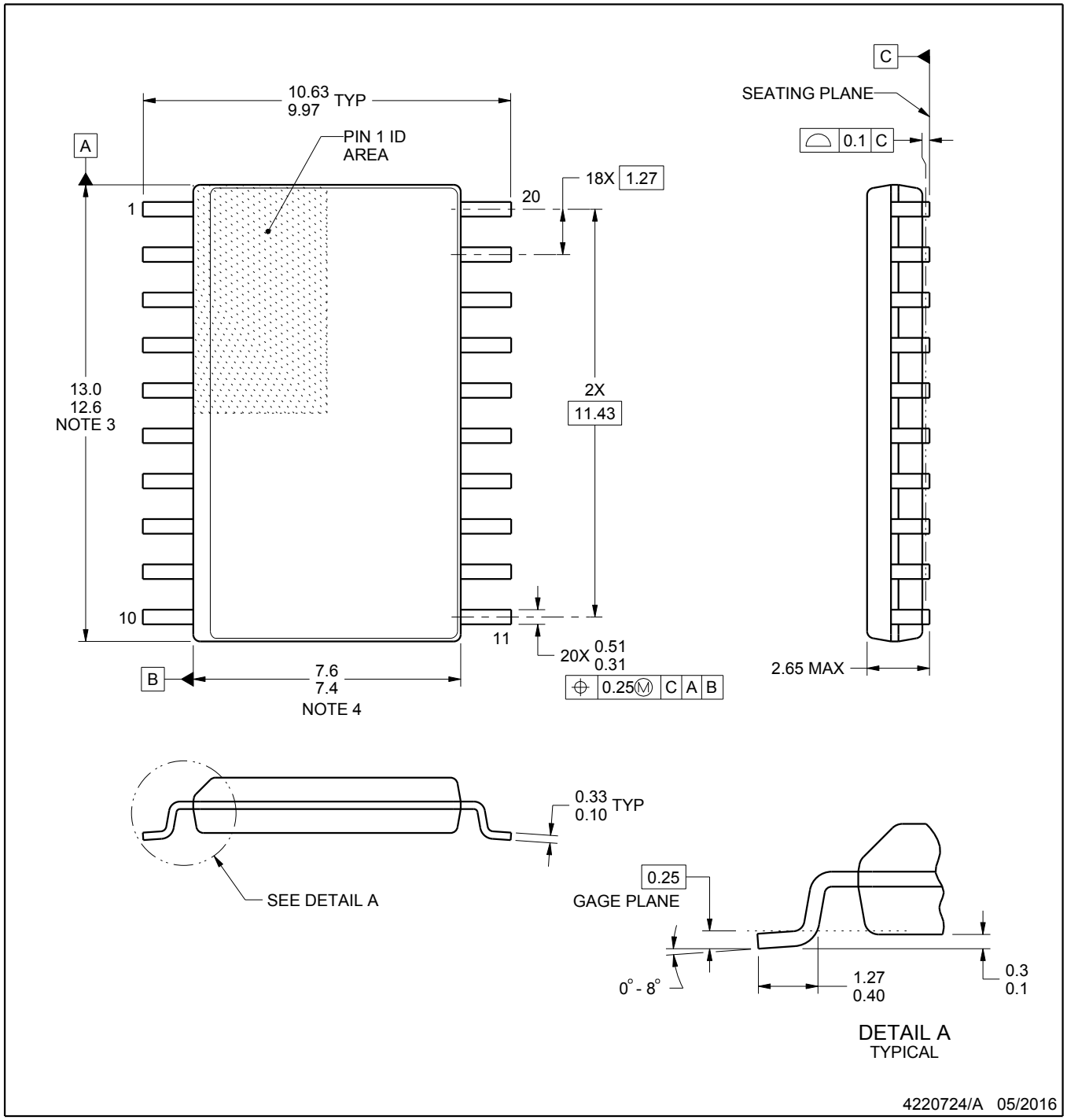

NOTES:

1. All linear dimensions are in millimeters. Dimensions in parenthesis are for reference only. Dimensioning and tolerancing per ASME Y14.5M.
2. This drawing is subject to change without notice.
3. This dimension does not include mold flash, protrusions, or gate burrs. Mold flash, protrusions, or gate burrs shall not exceed 0.15 mm per side.
4. This dimension does not include interlead flash. Interlead flash shall not exceed 0.43 mm per side.
5. Reference JEDEC registration MS-013.

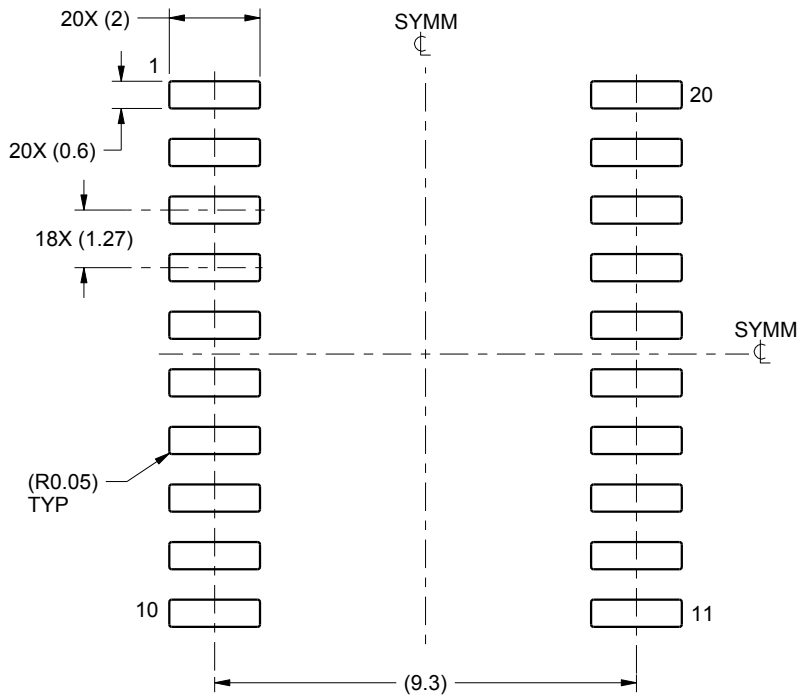

LAND PATTERN EXAMPLE
SCALE:6X

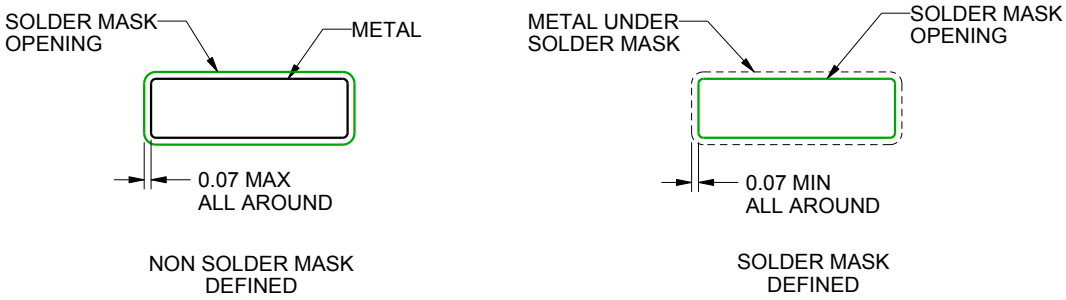

SOLDER MASK DETAILS

4220724/A 05/2016

NOTES: (continued)

6. Publication IPC-7351 may have alternate designs.
7. Solder mask tolerances between and around signal pads can vary based on board fabrication site.

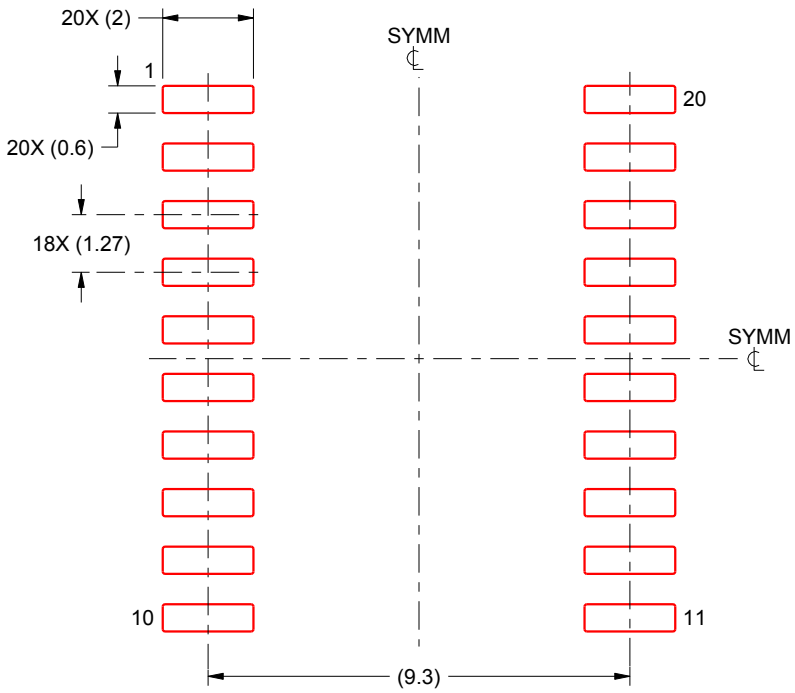

SOLDER PASTE EXAMPLE
BASED ON 0.125 mm THICK STENCIL
SCALE:6X

4220724/A 05/2016

NOTES: (continued)

8. Laser cutting apertures with trapezoidal walls and rounded corners may offer better paste release. IPC-7525 may have alternate design recommendations.
9. Board assembly site may have different recommendations for stencil design.

IMPORTANT NOTICE AND DISCLAIMER

TI PROVIDES TECHNICAL AND RELIABILITY DATA (INCLUDING DATASHEETS), DESIGN RESOURCES (INCLUDING REFERENCE DESIGNS), APPLICATION OR OTHER DESIGN ADVICE, WEB TOOLS, SAFETY INFORMATION, AND OTHER RESOURCES “AS IS” AND WITH ALL FAULTS, AND DISCLAIMS ALL WARRANTIES, EXPRESS AND IMPLIED, INCLUDING WITHOUT LIMITATION ANY IMPLIED WARRANTIES OF MERCHANTABILITY, FITNESS FOR A PARTICULAR PURPOSE OR NON-INFRINGEMENT OF THIRD PARTY INTELLECTUAL PROPERTY RIGHTS.

These resources are intended for skilled developers designing with TI products. You are solely responsible for (1) selecting the appropriate TI products for your application, (2) designing, validating and testing your application, and (3) ensuring your application meets applicable standards, and any other safety, security, regulatory or other requirements.

These resources are subject to change without notice. TI grants you permission to use these resources only for development of an application that uses the TI products described in the resource. Other reproduction and display of these resources is prohibited. No license is granted to any other TI intellectual property right or to any third party intellectual property right. TI disclaims responsibility for, and you fully indemnify TI and its representatives against any claims, damages, costs, losses, and liabilities arising out of your use of these resources.

TI’s products are provided subject to TI’s Terms of Sale, TI’s General Quality Guidelines, or other applicable terms available either on ti.com or provided in conjunction with such TI products. TI’s provision of these resources does not expand or otherwise alter TI’s applicable warranties or warranty disclaimers for TI products. Unless TI explicitly designates a product as custom or customer-specified, TI products are standard, catalog, general purpose devices.

TI objects to and rejects any additional or different terms you may propose.

Copyright © 2025, Texas Instruments Incorporated

Last updated 10/2025