Triple 3-Input AND Gate

High−Performance Silicon−Gate CMOS

MC74HC11A

The MC74HC11A is identical in pinout to the LS11. The device inputs are compatible with standard CMOS outputs; with pullup resistors, they are compatible with LSTTL outputs.

Features

- Output Drive Capability: 10 LSTTL Loads
- Outputs Directly Interface to CMOS, NMOS, and TTL
- Operating Voltage Range: 2.0 V to 6.0 V
- Low Input Current: 1 μA
- High Noise Immunity Characteristic of CMOS Devices
- −Q Suffix for Automotive and Other Applications Requiring Unique Site and Control Change Requirements; AEC−Q100 Qualified and PPAP Capable
- These Devices are Pb−Free, Halogen Free/BFR Free and are RoHS Compliant

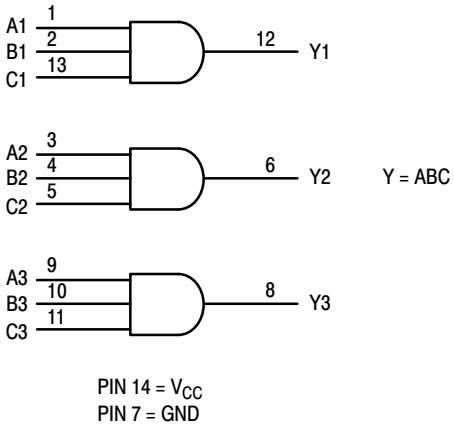

Figure 1. Logic Diagram

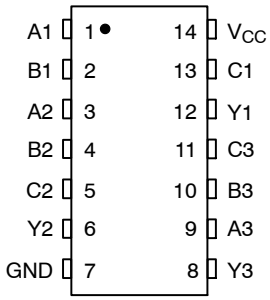

Figure 2. Pinout Diagram

MARKING DIAGRAMS

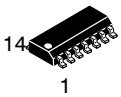

SOIC−14
D SUFFIX
CASE 751A

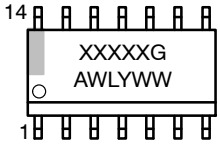

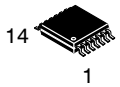

TSSOP−14
DT SUFFIX
CASE 948G

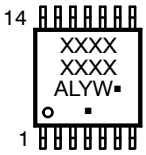

XXXX	= Specific Device Code
A	= Assembly Location
WL, L	= Wafer Lot
Y	= Year
WW, W	= Work Week
G or ▪	= Pb−Free Package

(Note: Microdot may be in either location)

FUNCTION TABLE

Inputs			Output
A	B	C	Y
L	X	X	L
X	L	X	L
X	X	L	L
H	H	H	H

ORDERING INFORMATION

See detailed ordering and shipping information in the package dimensions section on page 5 of this data sheet.

© Semiconductor Components Industries, LLC, 2013

MAXIMUM RATINGS

Symbol	Parameter		Value	Unit
V_{CC}	DC Supply Voltage		–0.5 to +6.5	V
V_{IN}	DC Input Voltage		–0.5 to V_{CC} + 0.5	V
V_{OUT}	DC Output Voltage		–0.5 to V_{CC} + 0.5	V
I_{IN}	DC Input Current, per Pin		±20	mA
I_{OUT}	DC Output Current, per Pin		±25	mA
I_{CC}	DC Supply Current, V_{CC} and GND Pins		±50	mA
I_{IK}	Input Clamp Current (V_{IN} < 0 or V_{IN} > V_{CC})		±20	mA
I_{OK}	Output Clamp Current (V_{OUT} < 0 or V_{OUT} > V_{CC})		±20	mA
T_{STG}	Storage Temperature		–65 to +150	°C
T_L	Lead Temperature, 1 mm from Case for 10 Seconds		260	°C
T_J	Junction Temperature Under Bias		±150	°C
θ_{JA}	Thermal Resistance (Note 1)	SOIC–14 TSSOP–14	116 150	°C/W
P_D	Power Dissipation in Still Air at 25°C	SOIC–14 TSSOP–14	1077 833	mW
MSL	Moisture Sensitivity		Level 1	–
F_R	Flammability Rating	Oxygen Index: 28 to 34	UL 94 V–0 @ 0.125 in	–
V_{ESD}	ESD Withstand Voltage (Note 2)	Human Body Model Charged Device Model	>2000 N/A	V

Stresses exceeding those listed in the Maximum Ratings table may damage the device. If any of these limits are exceeded, device functionality should not be assumed, damage may occur and reliability may be affected.

1. Measured with minimum pad spacing on an FR4 board, using 76mm–by–114mm, 2–ounce copper trace no air flow per JESD51–7.
2. HBM tested to EIA / JESD22–A114–A. CDM tested to JESD22–C101–A. JEDEC recommends that ESD qualification to EIA/JESD22–A115A (Machine Model) be discontinued.

RECOMMENDED OPERATING CONDITIONS

Symbol	Parameter		Min	Max	Unit
V_{CC}	DC Supply Voltage (Referenced to GND)		2.0	6.0	V
V_{IN}, V_{OUT}	DC Input Voltage, Output Voltage (Referenced to GND) (Note 3)		0	V_{CC}	V
T_A	Operating Free–Air Temperature		–55	+125	°C
t_r, t_f	Input Rise or Fall Time	V_{CC} = 2.0 V V_{CC} = 4.5 V V_{CC} = 6.0 V	0 0 0	1000 500 400	ns

Functional operation above the stresses listed in the Recommended Operating Ranges is not implied. Extended exposure to stresses beyond the Recommended Operating Ranges limits may affect device reliability.

3. Unused inputs must always be tied to an appropriate logic voltage level (e.g., either GND or V_{CC}). Unused outputs must be left open.

Share Feedback
Your Opinion Matters

DC ELECTRICAL CHARACTERISTICS

Symbol	Parameter	Test Conditions	V_{CC} V	Guaranteed Limit			Unit
				– 55 to 25°C	≤ 85°C	≤ 125°C	
V_{IH}	Minimum High–Level Input Voltage	V_{out} = 0.1 V or V_{CC} – 0.1 V $\|I_{out}\| \leq 20\ \mu A$	2.0 3.0 4.5 6.0	1.5 2.1 3.15 4.2	1.5 2.1 3.15 4.2	1.5 2.1 3.15 4.2	V
V_{IL}	Maximum Low–Level Input Voltage	V_{out} = 0.1 V or V_{CC} – 0.1 V $\|I_{out}\| \leq 20\ \mu A$	2.0 3.0 4.5 6.0	0.5 0.9 1.35 1.8	0.5 0.9 1.35 1.8	0.5 0.9 1.35 1.8	V
V_{OH}	Minimum High–Level Output Voltage	$V_{in} = V_{IH}$ or V_{IL} $\|I_{out}\| \leq 20\ \mu A$	2.0 4.5 6.0	1.9 4.4 5.9	1.9 4.4 5.9	1.9 4.4 5.9	V
		$V_{in} = V_{IH}$ or V_{IL} $\|I_{out}\| \leq 2.4$ mA $\|I_{out}\| \leq 4.0$ mA $\|I_{out}\| \leq 5.2$ mA	3.0 4.5 6.0	2.48 3.98 5.48	2.34 3.84 5.34	2.20 3.70 5.20	
V_{OL}	Maximum Low–Level Output Voltage	$V_{in} = V_{IH}$ $\|I_{out}\| \leq 20\ \mu A$	2.0 4.5 6.0	0.1 0.1 0.1	0.1 0.1 0.1	0.1 0.1 0.1	V
		$V_{in} = V_{IH}$ or V_{IL} $\|I_{out}\| \leq 2.4$ mA $\|I_{out}\| \leq 4.0$ mA $\|I_{out}\| \leq 5.2$ mA	3.0 4.5 6.0	0.26 0.26 0.26	0.33 0.33 0.33	0.40 0.40 0.40	
I_{in}	Maximum Input Leakage Current	$V_{in} = V_{CC}$ or GND	6.0	± 0.1	± 1.0	± 1.0	μA
I_{CC}	Maximum Quiescent Supply Current (per Package)	$V_{in} = V_{CC}$ or GND I_{out} = 0 μA	6.0	1	10	40	μA

AC ELECTRICAL CHARACTERISTICS

Symbol	Parameter	V_{CC} V	Guaranteed Limit			Unit
			– 55 to 25°C	≤ 85°C	≤ 125°C	
t_{PLH}, t_{PHL}	Maximum Propagation Delay, (A, B, or C) to Y (Figures 3 and 4)	2.0 3.0 4.5 6.0	95 45 19 16	120 60 24 20	145 75 29 25	ns
t_{TLH}, t_{THL}	Maximum Output Transition Time, Any Output (Figures 3 and 4)	2.0 3.0 4.5 6.0	75 30 15 13	95 40 19 16	110 55 22 19	ns
C_{in}	Maximum Input Capacitance	–	10	10	10	pF

		Typical @ 25°C, V_{CC} = 5.0 V	
C_{PD}	Power Dissipation Capacitance (Per Gate)*	27	pF

*Used to determine the no–load dynamic power consumption: $P_D = C_{PD} V_{CC}^2 f + I_{CC} V_{CC}$.

Share Feedback
Your Opinion Matters

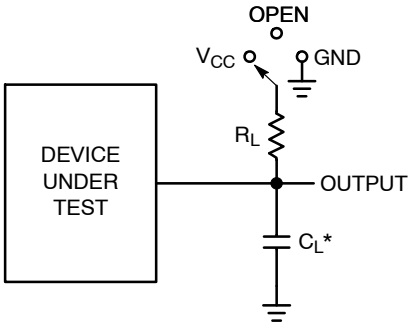

*C_L Includes probe and jig capacitance

Test	Switch Position	C_L	R_L
t_{PLH} / t_{PHL}	Open	50 pF	1 kΩ
t_{PLZ} / t_{PZL}	V_{CC}		
t_{PHZ} / t_{PZH}	GND		

Figure 3. Test Circuit

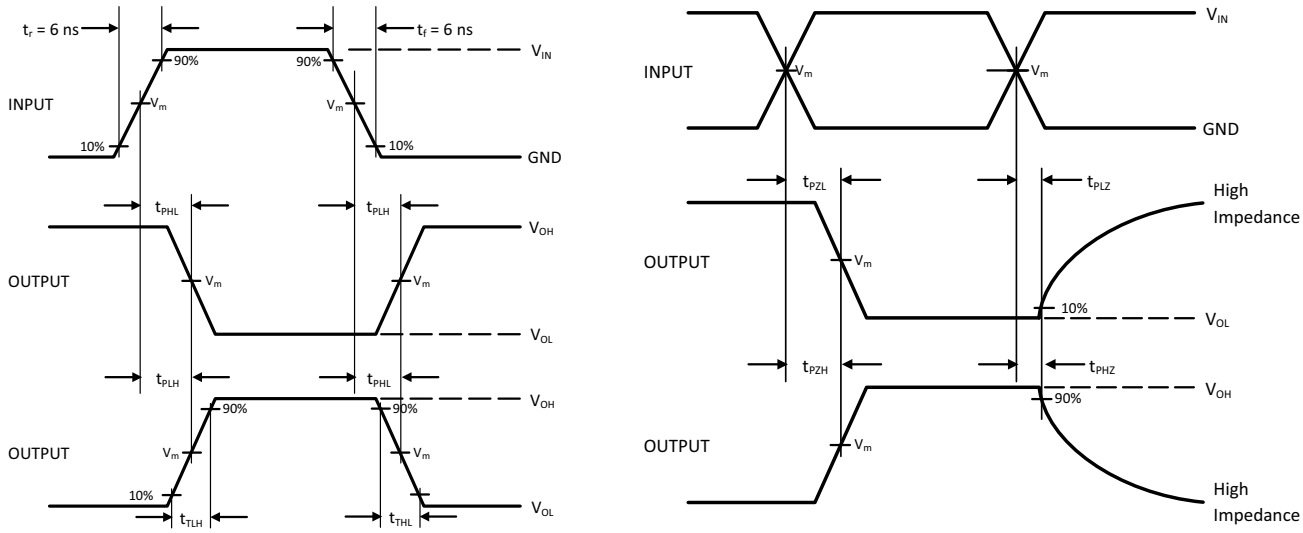

Device	V_{IN}, V	V_m, V
MC74HC11A	V_{CC}	50% x V_{CC}

Figure 4. Switching Waveforms

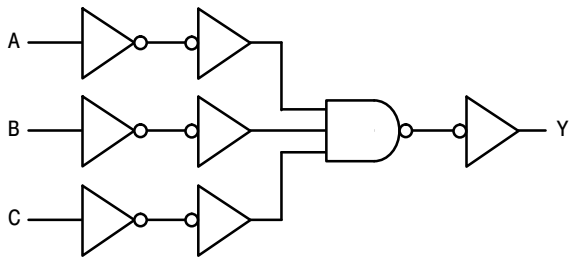

Figure 5. Expanded Logic Diagram
(1/3 of the Device)

Share Feedback
Your Opinion Matters

ORDERING INFORMATION

Device	Package	Marking	Shipping†
MC74HC11ADG	SOIC−14	HC11A	55 Units / Rail
MC74HC11ADG−Q*	SOIC−14	HC11A	55 Units / Rail
MC74HC11ADR2G	SOIC−14	HC11A	2500 / Tape & Reel
MC74HC11ADR2G−Q*	SOIC−14	HC11A	2500 / Tape & Reel
MC74HC11ADTR2G	TSSOP−14	HC 11A	2500 / Tape & Reel
MC74HC11ADTR2G−Q*	TSSOP−14	HC 11A	2500 / Tape & Reel

†For information on tape and reel specifications, including part orientation and tape sizes, please refer to our Tape and Reel Packaging Specifications Brochure, BRD8011/D.

*−Q Suffix for Automotive and Other Applications Requiring Unique Site and Control Change Requirements; AEC−Q100 Qualified and PPAP Capable

Share Feedback
Your Opinion Matters

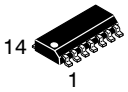

SCALE 1:1

SOIC−14 NB
CASE 751A−03
ISSUE L

DATE 03 FEB 2016

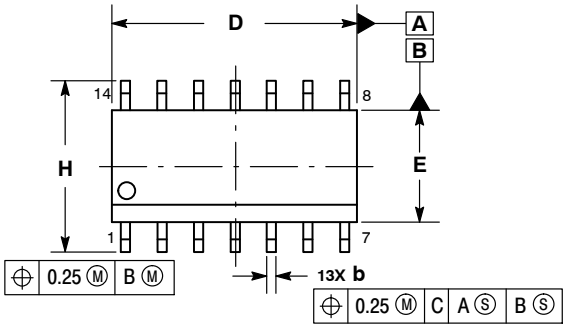

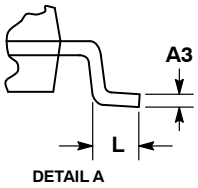

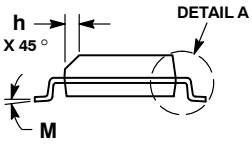

NOTES:
1. DIMENSIONING AND TOLERANCING PER ASME Y14.5M, 1994.
2. CONTROLLING DIMENSION: MILLIMETERS.
3. DIMENSION b DOES NOT INCLUDE DAMBAR PROTRUSION. ALLOWABLE PROTRUSION SHALL BE 0.13 TOTAL IN EXCESS OF AT MAXIMUM MATERIAL CONDITION.
4. DIMENSIONS D AND E DO NOT INCLUDE MOLD PROTRUSIONS.
5. MAXIMUM MOLD PROTRUSION 0.15 PER SIDE.

	MILLIMETERS		INCHES	
DIM	MIN	MAX	MIN	MAX
A	1.35	1.75	0.054	0.068
A1	0.10	0.25	0.004	0.010
A3	0.19	0.25	0.008	0.010
b	0.35	0.49	0.014	0.019
D	8.55	8.75	0.337	0.344
E	3.80	4.00	0.150	0.157
e	1.27 BSC		0.050 BSC	
H	5.80	6.20	0.228	0.244
h	0.25	0.50	0.010	0.019
L	0.40	1.25	0.016	0.049
M	0 °	7 °	0 °	7 °

SOLDERING FOOTPRINT*

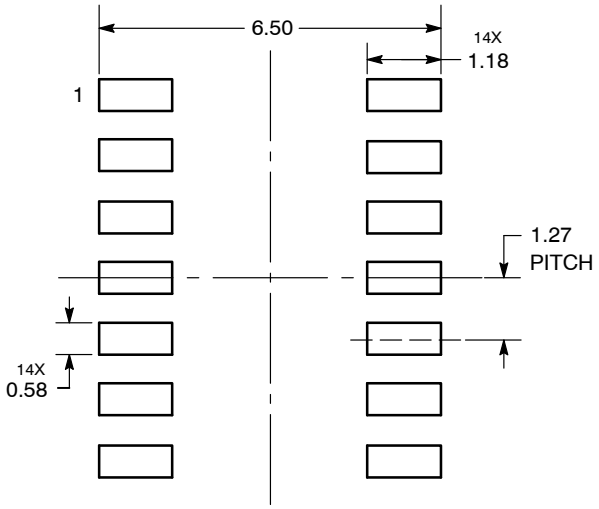

DIMENSIONS: MILLIMETERS

*For additional information on our Pb−Free strategy and soldering details, please download the **onsemi** Soldering and Mounting Techniques Reference Manual, SOLDERRM/D.

GENERIC MARKING DIAGRAM*

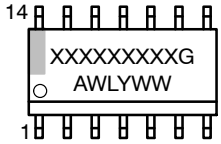

XXXXX	= Specific Device Code
A	= Assembly Location
WL	= Wafer Lot
Y	= Year
WW	= Work Week
G	= Pb−Free Package

*This information is generic. Please refer to device data sheet for actual part marking. Pb−Free indicator, “G” or microdot “▪”, may or may not be present. Some products may not follow the Generic Marking.

STYLES ON PAGE 2

DOCUMENT NUMBER:	98ASB42565B	Electronic versions are uncontrolled except when accessed directly from the Document Repository. Printed versions are uncontrolled except when stamped “CONTROLLED COPY” in red.
DESCRIPTION:	SOIC−14 NB	PAGE 1 OF 2

onsemi and onsemi are trademarks of Semiconductor Components Industries, LLC dba **onsemi** or its subsidiaries in the United States and/or other countries. **onsemi** reserves the right to make changes without further notice to any products herein. **onsemi** makes no warranty, representation or guarantee regarding the suitability of its products for any particular purpose, nor does **onsemi** assume any liability arising out of the application or use of any product or circuit, and specifically disclaims any and all liability, including without limitation special, consequential or incidental damages. **onsemi** does not convey any license under its patent rights nor the rights of others.

SOIC−14
CASE 751A−03
ISSUE L

DATE 03 FEB 2016

STYLE 1:
PIN 1. COMMON CATHODE
2. ANODE/CATHODE
3. ANODE/CATHODE
4. NO CONNECTION
5. ANODE/CATHODE
6. NO CONNECTION
7. ANODE/CATHODE
8. ANODE/CATHODE
9. ANODE/CATHODE
10. NO CONNECTION
11. ANODE/CATHODE
12. ANODE/CATHODE
13. NO CONNECTION
14. COMMON ANODE

STYLE 2:
CANCELLED

STYLE 3:
PIN 1. NO CONNECTION
2. ANODE
3. ANODE
4. NO CONNECTION
5. ANODE
6. NO CONNECTION
7. ANODE
8. ANODE
9. ANODE
10. NO CONNECTION
11. ANODE
12. ANODE
13. NO CONNECTION
14. COMMON CATHODE

STYLE 4:
PIN 1. NO CONNECTION
2. CATHODE
3. CATHODE
4. NO CONNECTION
5. CATHODE
6. NO CONNECTION
7. CATHODE
8. CATHODE
9. CATHODE
10. NO CONNECTION
11. CATHODE
12. CATHODE
13. NO CONNECTION
14. COMMON ANODE

STYLE 5:
PIN 1. COMMON CATHODE
2. ANODE/CATHODE
3. ANODE/CATHODE
4. ANODE/CATHODE
5. ANODE/CATHODE
6. NO CONNECTION
7. COMMON ANODE
8. COMMON CATHODE
9. ANODE/CATHODE
10. ANODE/CATHODE
11. ANODE/CATHODE
12. ANODE/CATHODE
13. NO CONNECTION
14. COMMON ANODE

STYLE 6:
PIN 1. CATHODE
2. CATHODE
3. CATHODE
4. CATHODE
5. CATHODE
6. CATHODE
7. CATHODE
8. ANODE
9. ANODE
10. ANODE
11. ANODE
12. ANODE
13. ANODE
14. ANODE

STYLE 7:
PIN 1. ANODE/CATHODE
2. COMMON ANODE
3. COMMON CATHODE
4. ANODE/CATHODE
5. ANODE/CATHODE
6. ANODE/CATHODE
7. ANODE/CATHODE
8. ANODE/CATHODE
9. ANODE/CATHODE
10. ANODE/CATHODE
11. COMMON CATHODE
12. COMMON ANODE
13. ANODE/CATHODE
14. ANODE/CATHODE

STYLE 8:
PIN 1. COMMON CATHODE
2. ANODE/CATHODE
3. ANODE/CATHODE
4. NO CONNECTION
5. ANODE/CATHODE
6. ANODE/CATHODE
7. COMMON ANODE
8. COMMON ANODE
9. ANODE/CATHODE
10. ANODE/CATHODE
11. NO CONNECTION
12. ANODE/CATHODE
13. ANODE/CATHODE
14. COMMON CATHODE

DOCUMENT NUMBER:	**98ASB42565B**	Electronic versions are uncontrolled except when accessed directly from the Document Repository. Printed versions are uncontrolled except when stamped "CONTROLLED COPY" in red.
DESCRIPTION:	**SOIC−14 NB**	**PAGE 2 OF 2**

onsemi and onsemi are trademarks of Semiconductor Components Industries, LLC dba **onsemi** or its subsidiaries in the United States and/or other countries. **onsemi** reserves the right to make changes without further notice to any products herein. **onsemi** makes no warranty, representation or guarantee regarding the suitability of its products for any particular purpose, nor does **onsemi** assume any liability arising out of the application or use of any product or circuit, and specifically disclaims any and all liability, including without limitation special, consequential or incidental damages. **onsemi** does not convey any license under its patent rights nor the rights of others.

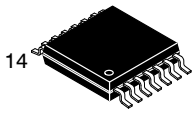

TSSOP−14 5.00x4.40x0.95, 0.65P
CASE 948G
ISSUE D

DATE 30 JUN 2026

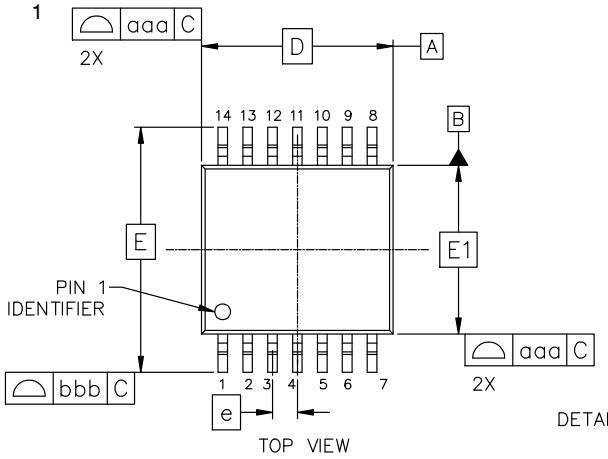

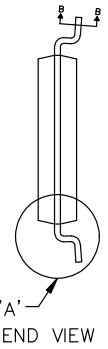

MILLIMETERS			
DIM	MIN	NOM	MAX
A	---	---	1.20
A1	0.05	0.10	0.15
A2	0.85	0.95	1.05
b	0.19	0.25	0.30
b1	0.19	0.22	0.25
c	0.09	0.15	0.20
c1	0.09	0.12	0.16
D	5.00 BSC		
E	6.40 BSC		
E1	4.40 BSC		
e	0.65 BSC		
L	0.50	0.63	0.75
L1	1.00 REF		
L2	0.25 BSC		
Θ	0°	4°	8°
TOLERANCE FORM & POSITION			
aaa	0.10		
bbb	0.15		
ccc	0.08		
ddd	0.10		
eee	0.10		

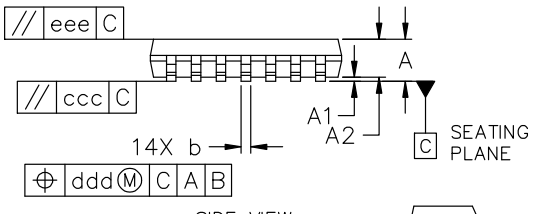

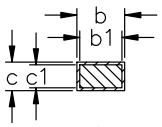

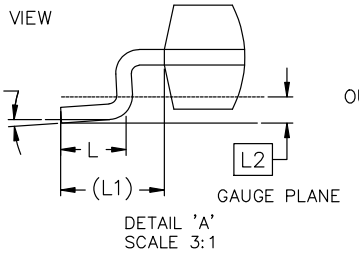

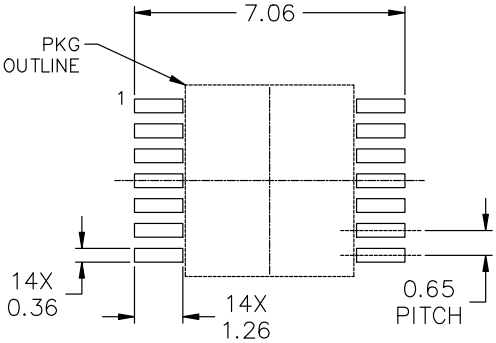

RECOMMENDED MOUNTING FOOTPRINT

*For additional information on our Pb−Free strategy and soldering details, please download the onsemi Soldering and Mounting Techniques Reference Manual, SOLDERRM/D.

NOTES:
1. DIMENSIONING AND TOLERANCING AS PER ASME Y14.5M, 2018.
2. CONTROLLING DIMENSION: MILLIMETER.
3. DIMENSION D DOES NOT INCLIDE MOLD FLASH, PROTRUSIONS OR GATE BURRS. MOLD FLASH OR GATE BURRS SHALL NOT EXCEED 0.15 PER SIDE.
4. DIMENSION E1 DOES NOT INCLUDE INTERLEAD FLASH OR PROTRUSION. INTERLEAD FLASH OR PROTRUSION SHALL NOT EXCEED 0.25 PER SIDE.
5. DIMENSION b DOES NOT INCLUDE DAMBAR PROTRUSION. ALLOWABLE DAMBAR PROTRUSION SHALL BE 0.08 TOTAL IN EXCESS OF THE b DIMENSION AT MAXIMUM MATERIAL CONDITION.
6. TERMINAL NUMBERS ARE SHOWN FOR REFERENCE ONLY.

GENERIC MARKING DIAGRAM*

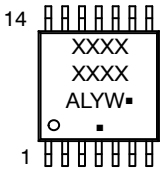

A = Assembly Location
L = Wafer Lot
Y = Year
W = Work Week
▪ = Pb−Free Package
(Note: Microdot may be in either location)

*This information is generic. Please refer to device data sheet for actual part marking. Pb−Free indicator, "G" or microdot "▪", may or may not be present. Some products may not follow the Generic Marking.

DOCUMENT NUMBER:	98ASH70246A	Electronic versions are uncontrolled except when accessed directly from the Document Repository. Printed versions are uncontrolled except when stamped "CONTROLLED COPY" in red.	
DESCRIPTION:	TSSOP−14 5.00x4.40x0.95, 0.65P		PAGE 1 OF 1

onsemi and onsemi are trademarks of Semiconductor Components Industries, LLC dba **onsemi** or its subsidiaries in the United States and/or other countries. **onsemi** reserves the right to make changes without further notice to any products herein. **onsemi** makes no warranty, representation or guarantee regarding the suitability of its products for any particular purpose, nor does **onsemi** assume any liability arising out of the application or use of any product or circuit, and specifically disclaims any and all liability, including without limitation special, consequential or incidental damages. **onsemi** does not convey any license under its patent rights nor the rights of others.

onsemi, onsemi, and other names, marks, and brands are registered and/or common law trademarks of Semiconductor Components Industries, LLC dba "**onsemi**" or its affiliates and/or subsidiaries in the United States and/or other countries. **onsemi** owns the rights to a number of patents, trademarks, copyrights, trade secrets, and other intellectual property. A listing of **onsemi**'s product/patent coverage may be accessed at www.onsemi.com/site/pdf/Patent−Marking.pdf. **onsemi** reserves the right to make changes at any time to any products or information herein, without notice. The information herein is provided "as−is" and **onsemi** makes no warranty, representation or guarantee regarding the accuracy of the information, product features, availability, functionality, or suitability of its products for any particular purpose, nor does **onsemi** assume any liability arising out of the application or use of any product or circuit, and specifically disclaims any and all liability, including without limitation special, consequential or incidental damages. Buyer is responsible for its products and applications using **onsemi** products, including compliance with all laws, regulations and safety requirements or standards, regardless of any support or applications information provided by **onsemi**. "Typical" parameters which may be provided in **onsemi** data sheets and/or specifications can and do vary in different applications and actual performance may vary over time. All operating parameters, including "Typicals" must be validated for each customer application by customer's technical experts. **onsemi** does not convey any license under any of its intellectual property rights nor the rights of others. **onsemi** products are not designed, intended, or authorized for use as a critical component in life support systems or any FDA Class 3 medical devices or medical devices with a same or similar classification in a foreign jurisdiction or any devices intended for implantation in the human body. Should Buyer purchase or use **onsemi** products for any such unintended or unauthorized application, Buyer shall indemnify and hold **onsemi** and its officers, employees, subsidiaries, affiliates, and distributors harmless against all claims, costs, damages, and expenses, and reasonable attorney fees arising out of, directly or indirectly, any claim of personal injury or death associated with such unintended or unauthorized use, even if such claim alleges that **onsemi** was negligent regarding the design or manufacture of the part. **onsemi** is an Equal Opportunity/Affirmative Action Employer. This literature is subject to all applicable copyright laws and is not for resale in any manner.

ADDITIONAL INFORMATION

TECHNICAL PUBLICATIONS:
Technical Library: www.onsemi.com/design/resources/technical−documentation
onsemi Website: www.onsemi.com

ONLINE SUPPORT: www.onsemi.com/support
For additional information, please contact your local Sales Representative at
www.onsemi.com/support/sales