CUI Devices is now Same Sky! Learn More

same sky

Additional Resources: Product Page

SERIES: MD | DESCRIPTION: MINI DIN CONNECTOR

FEATURES

- 3~8 pins
- plastic strain relief
- rated voltage: 100 Vac



RoHS

PART NUMBER KEY

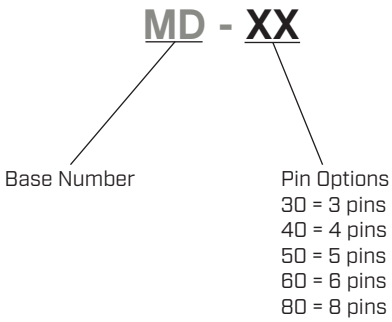

SPECIFICATIONS

parameter	conditions/description	min	typ	max	units
rated input voltage			100 12		Vac Vdc
rated input current	at 100 Vac at 12 Vdc			1 2	A A
contact resistance				30	mΩ
insulation resistance	at 500 Vdc	50			MΩ
voltage withstand	for 1 minute			500	Vac
insertion force				6.0	kg
withdrawal force		0.8		4.5	kg
operating temperature		-20		105	°C
life			5,000		cycles
RoHS	yes				

MECHANICAL DRAWINGS

units: mm
tolerance: ±0.30 mm
unless otherwise specified

Item	DESCRIPTION	MATERIAL	PLATING/COLOR
A	cover	EVA + PE(2L)	black
B	shell	ABS (PA)	black
C	metal shield	brass	nickel
D	housing	NY6+FB (PA)	
E	contact	brass	silver

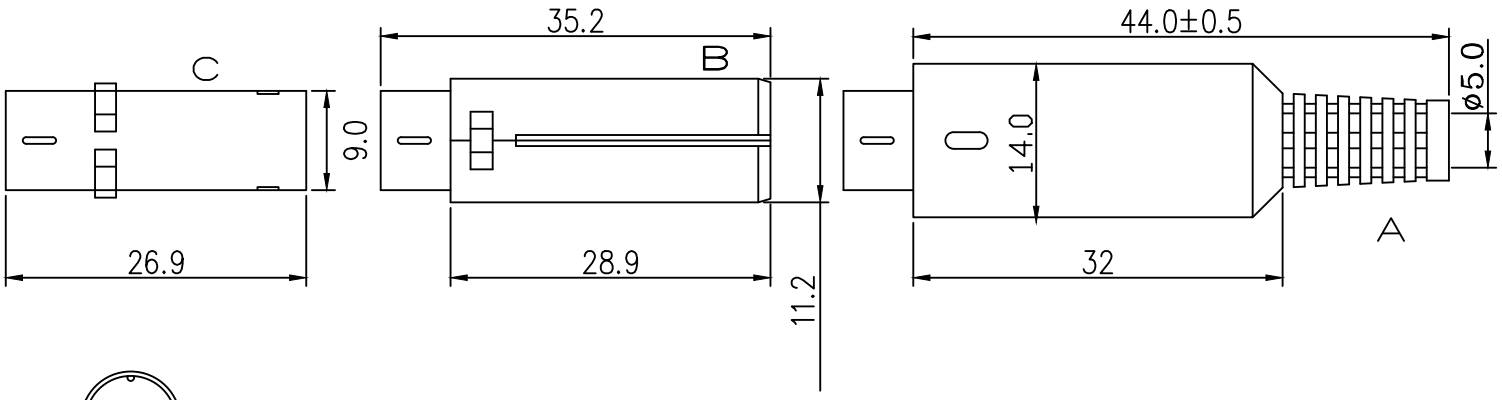

MD-30

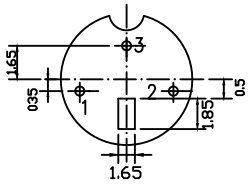

MD-40

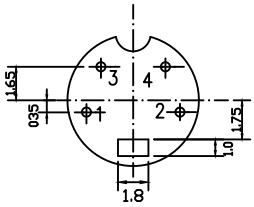

MD-50

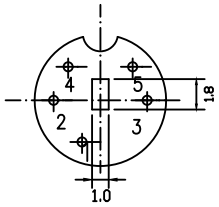

MD-60

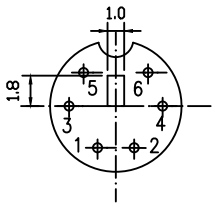

MD-80

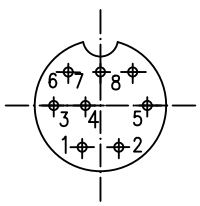

MECHANICAL ASSEMBLY

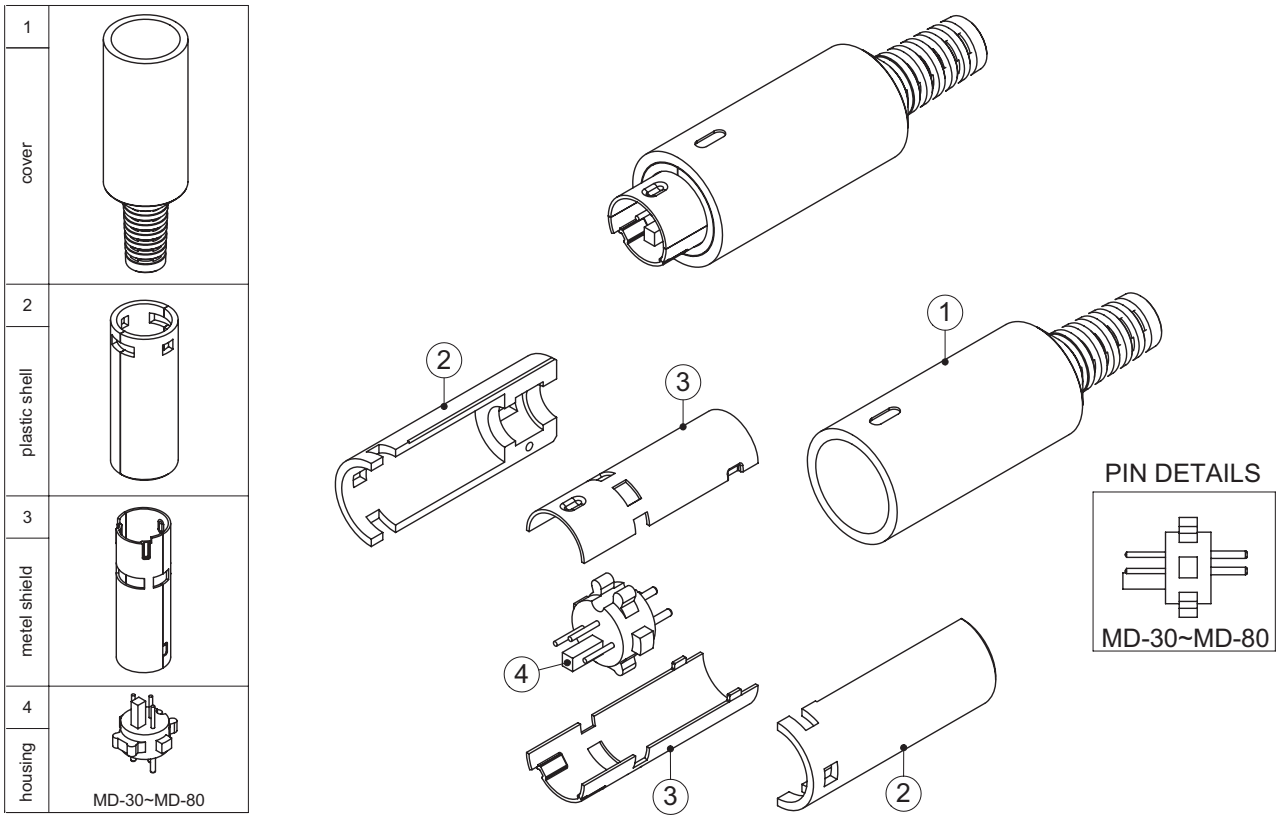

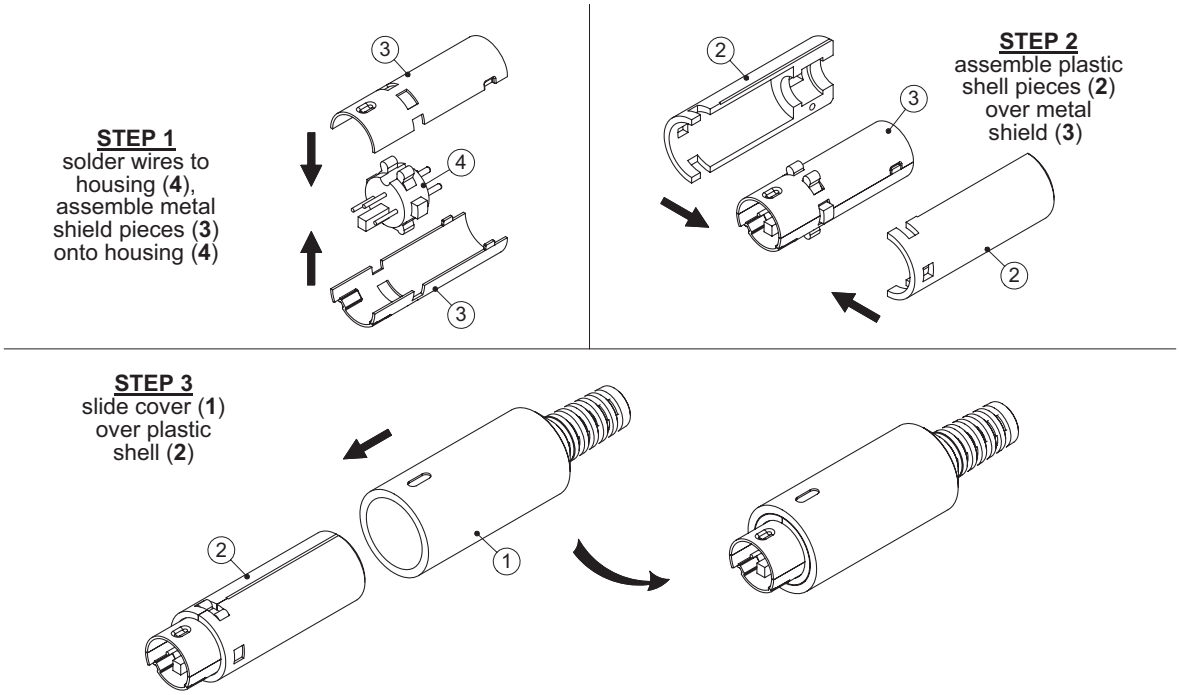

Note: 1. The mechanical assembly is a genral graphical representation only. Specific models will differ in actual appearance.

REVISION HISTORY

rev.	description	date
1.0	initial release	04/06/2006
1.01	updated dimensions	02/27/2008
1.02	added tolerance	12/01/2009
1.03	added insertion and withdrawal force	05/19/2010
1.04	new template applied	04/09/2012
1.05	updated housing	04/24/2012
1.06	added 9 pin model detail	06/08/2017
1.07	brand update	02/21/2020
1.08	modified design	06/24/2022
1.09	logo, datasheet style update	08/05/2022
1.10	discontinued models MD-70 & MD-90	09/26/2022
1.11	CUI Devices rebranded to Same Sky	09/12/2024

The revision history provided is for informational purposes only and is believed to be accurate.

same sky

Same Sky offers a one (1) year limited warranty. Complete warranty information is listed on our website.

Same Sky reserves the right to make changes to the product at any time without notice. Information provided by Same Sky is believed to be accurate and reliable. However, no responsibility is assumed by Same Sky for its use, nor for any infringements of patents or other rights of third parties which may result from its use.

Same Sky products are not authorized or warranted for use as critical components in equipment that requires an extremely high level of reliability. A critical component is any component of a life support device or system whose failure to perform can be reasonably expected to cause the failure of the life support device or system, or to affect its safety or effectiveness.

sameskydevices.com