CUI Devices is now Same Sky! Learn More

same sky

SERIES: MD-SM | DESCRIPTION: MINI DIN CONNECTOR

FEATURES

- PCB mount
- right angle
- side shielded



RoHS

PART NUMBER KEY

MD - XX SM

Base Number

Pin Options
30 = 3 pins
40 = 4 pins
50 = 5 pins
60 = 6 pins
70 = 7 pins
80 = 8 pins
90 = 9 pins

SPECIFICATIONS

parameter	conditions/description	min	typ	max	units
rated input voltage			100 12		Vac Vdc
rated input current	at 100 Vac at 12 Vdc			1 2	A A
contact resistance				30	mΩ
insulation resistance	at 250 Vdc	50			MΩ
voltage withstand	for 1 minute			250	Vac
insertion force		0.8		6.0	kg
withdrawal force		0.8		4.5	kg
operating temperature		-40		85	°C
life			1000		cycles
flammability rating	UL94V-0				
RoHS	yes				

SOLDERABILITY

parameter	conditions/description	min	typ	max	units
wave soldering	for 10 seconds max	235		260	°C
hand soldering	for 5±1 seconds	240	245	250	°C

MECHANICAL DRAWINGS (MD-30SM, MD-40SM, MD-50SM)

units: mm
tolerance: ±0.3 mm
PCB: ±0.1 mm
unless otherwise noted

ITEM	DESCRIPTION	MATERIAL	PLATING/COLOR
1	body	PBT (UL94V-0)	black
2	cover	PBT (UL94V-0)	black
3	earth terminal	brass	tin
4	terminals	phosphor bronze	silver
5	shield	SPCC	tin

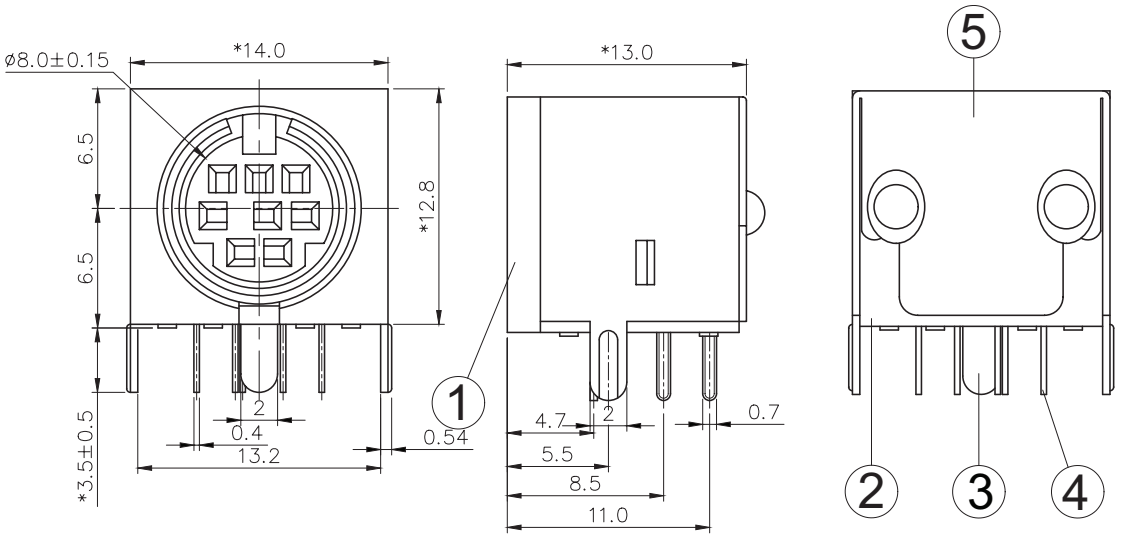

MD-30SM **MD-40SM** **MD-50SM**

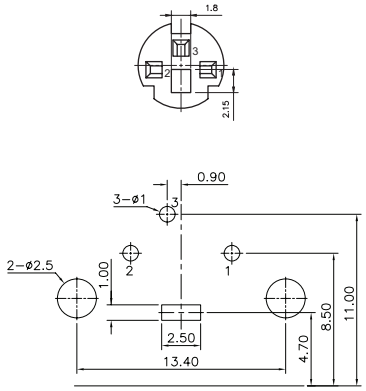

Recommended PCB Layout
Top View
(Date Codes prior to 03/03/2022)

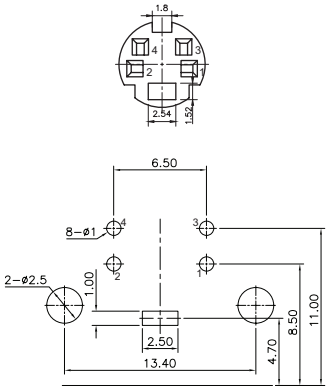

Recommended PCB Layout
Top View
(Date Codes prior to 03/03/2022)

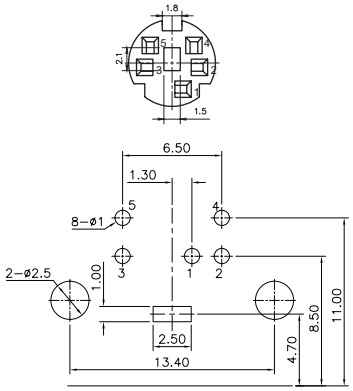

Recommended PCB Layout
Top View
(Date Codes prior to 03/03/2022)

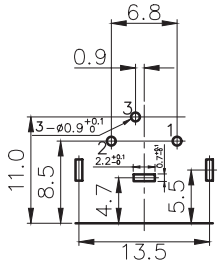

Recommended PCB Layout
Top View
(Date Codes after 03/03/2022)

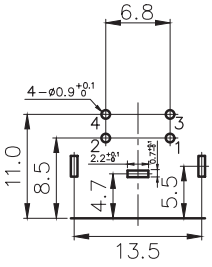

Recommended PCB Layout
Top View
(Date Codes after 03/03/2022)

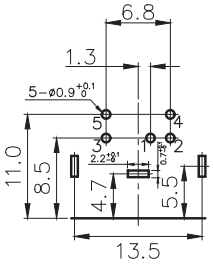

Recommended PCB Layout
Top View
(Date Codes after 03/03/2022)

MECHANICAL DRAWINGS (MD-60SM, MD-70SM, MD-80SM)

units: mm
tolerance: ±0.3 mm
PCB: ±0.1 mm
unless otherwise noted

ITEM	DESCRIPTION	MATERIAL	PLATING/COLOR
1	body	PBT (UL94V-0)	black
2	cover	PBT (UL94V-0)	black
3	earth terminal	brass	tin
4	terminals	phosphor bronze	silver
5	shield	SPCC	tin

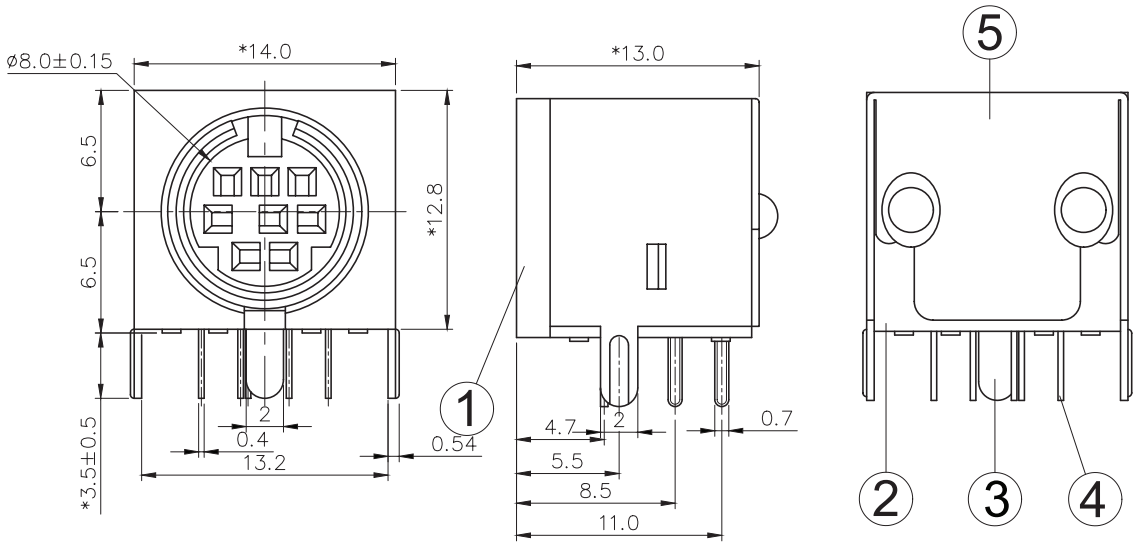

MD-60SM **MD-70SM** **MD-80SM**

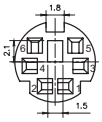

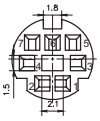

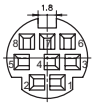

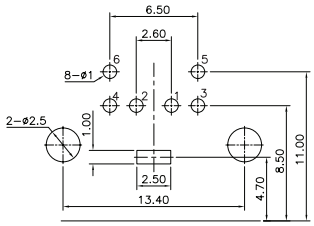

Recommended PCB Layout
Top View
(Date Codes prior to 03/03/2022)

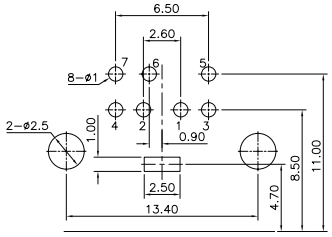

Recommended PCB Layout
Top View
(Date Codes prior to 03/03/2022)

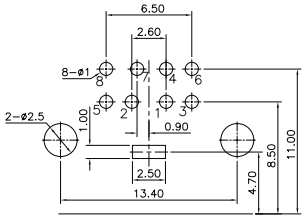

Recommended PCB Layout
Top View
(Date Codes prior to 03/03/2022)

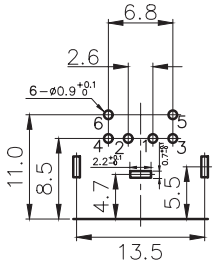

Recommended PCB Layout
Top View
(Date Codes after 03/03/2022)

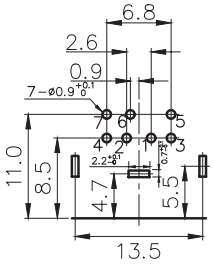

Recommended PCB Layout
Top View
(Date Codes after 03/03/2022)

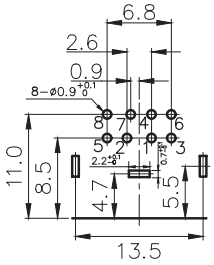

Recommended PCB Layout
Top View
(Date Codes after 03/03/2022)

MECHANICAL DRAWING (MD-90SM)

units: mm
tolerance: ±0.3 mm
PCB: ±0.1 mm
unless otherwise noted

ITEM	DESCRIPTION	MATERIAL	PLATING/COLOR
1	body	PBT (UL94V-0)	black
2	cover	PBT (UL94V-0)	black
3	earth terminal	brass	tin
4	terminals	phosphor bronze	silver
5	shield	SPCC	tin

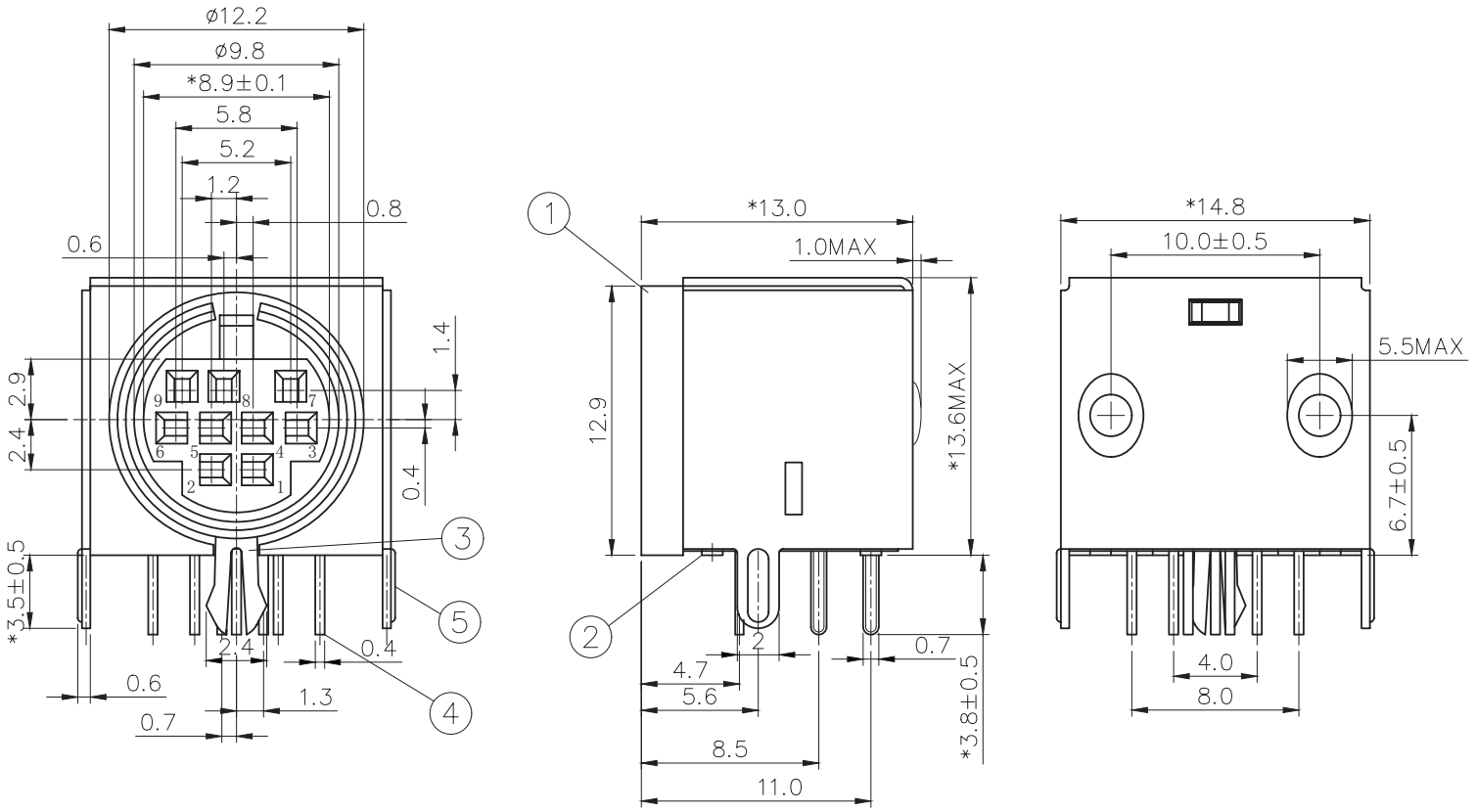

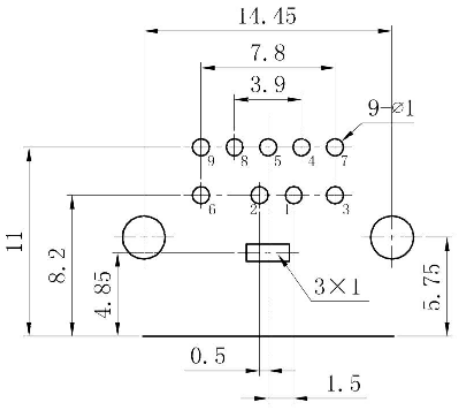

Recommended PCB Layout
Top View
(Date Codes prior to 03/03/2022)

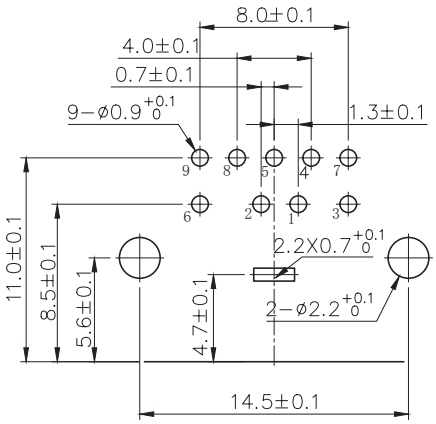

Recommended PCB Layout
Top View
(Date Codes after 03/03/2022)

REVISION HISTORY

rev.	description	date
1.0	initial release	02/23/2006
1.01	new template applied	02/22/2012
1.02	updated datasheet	08/25/2017
1.03	added hand soldering details	01/19/2018
1.04	updated housing, brand update	11/21/2019
1.05	updated PCB footprints	08/11/2020
1.06	modified design, changed factory	02/18/2022
1.07	logo, datasheet style update	08/05/2022
1.08	updated drawings	11/23/2022
1.09	CUI Devices rebranded to Same Sky	09/12/2024

The revision history provided is for informational purposes only and is believed to be accurate.

Same Sky offers a one (1) year limited warranty. Complete warranty information is listed on our website.

Same Sky reserves the right to make changes to the product at any time without notice. Information provided by Same Sky is believed to be accurate and reliable. However, no responsibility is assumed by Same Sky for its use, nor for any infringements of patents or other rights of third parties which may result from its use.

Same Sky products are not authorized or warranted for use as critical components in equipment that requires an extremely high level of reliability. A critical component is any component of a life support device or system whose failure to perform can be reasonably expected to cause the failure of the life support device or system, or to affect its safety or effectiveness.