Dialight

657 Series

Domed & Flat LED Watertight
11/16” Mounting Hole
Panel Mount Indicators



FEATURES / BENEFITS

- IP67 / NEMA 4X
- Cool-to-the-touch Operation
- Available with non-tinted lenses to eliminate “phantom effect”
- Daylight Viewable
- Resistant to shock and vibration
- Lens Option:
  - Low Profile Flat
  - Wide Angle Domed
- RoHS compliant
- Anti-Capillary Wire
- LED Technology engineered for up to 100k hours of operation

APPLICATIONS

- Electrical Control Panels
- Wastewater Treatment Controls
- Dashboards:
  - Buses and transit vehicles
  - Agricultural and construction equipment
  - Aircraft and military vehicles
- Outdoor Pixels on Lane Control and Signage
- Status Indication on Industrial Equipment

SPECIFICATIONS

- Operating Voltage - 5, 12, 24 VDC
- Operating temperature -35º C to + 65° C
- Storage temperature -40º C to +100° C
- Front Mounting in 11/16” clearance hole
- IP67 / NEMA 4X
- Lead wire – 18 AWG anti-capillary, standard
- Available in Red, Yellow, Green, Blue, Orange and White
- Mounting Torque - 15in Lbs.
- Lens Material UV Stablized Polycarbonate 94-VO
- Max Panel Thickness - .350”

FLAT LENS

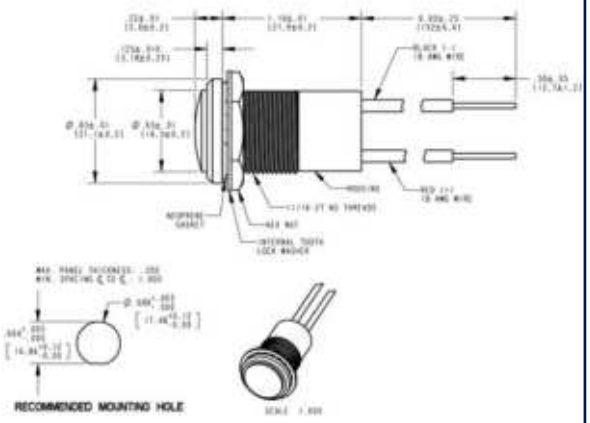

DOMED LENS

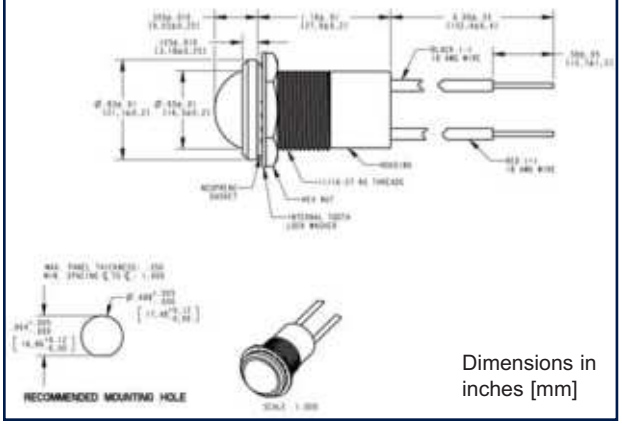

Dimensions in inches [mm]

Dialight reserves the right to make changes at any time in order to supply the best product possible.

Dialight Europe Ltd

Exning Road • Newmarket • Suffolk, United Kingdom, CB8 0AX

Tel :+44 (0)1638 666541 • www.dialight.com

A4703 UL REGISTERED FIRM ISO 9001

Dialight Corporation

Dialight Corporation

1501 Route 34 South • Farmingdale, NJ 07727 USA

Tel: (1) 732-919-3119 • Fax: (1) 732-751-5778 • www.dialight.com

PART NUMBERS - FLAT LENS VERSION

Part Number	*Lens Style	Lamp Color	Voltage (VDC)	Lens Color	Typ Current (mA)	Typ Luminance (fL)
657-1502-103F	Flat	Red	5	Tinted Diffused	19	550
657-1602-103F	Flat	Green	5	Tinted Diffused	18	250
657-1702-103F	Flat	Yellow	5	Tinted Diffused	19	500
657-1802-103F	Flat	Blue	5	Tinted Diffused	18	100
657-1902-103F	Flat	Orange	5	Tinted Diffused	19	600
657-1503-103F	Flat	Red	12	Tinted Diffused	20	550
657-1603-103F	Flat	Green	12	Tinted Diffused	20	250
657-1703-103F	Flat	Yellow	12	Tinted Diffused	20	500
657-1803-103F	Flat	Blue	12	Tinted Diffused	20	100
657-1903-103F	Flat	Orange	12	Tinted Diffused	20	600
657-1504-103F	Flat	Red	24	Tinted Diffused	19	550
657-1604-103F	Flat	Green	24	Tinted Diffused	20	250
657-1704-103F	Flat	Yellow	24	Tinted Diffused	19	500
657-1804-103F	Flat	Blue	24	Tinted Diffused	20	100
657-1904-103F	Flat	Orange	24	Tinted Diffused	19	600
657-1002-303F	Flat	White	5	White Diffused	18	500
657-1502-303F	Flat	Red	5	White Diffused	19	550
657-1602-303F	Flat	Green	5	White Diffused	18	250
657-1702-303F	Flat	Yellow	5	White Diffused	19	500
657-1802-303F	Flat	Blue	5	White Diffused	18	100
657-1902-303F	Flat	Orange	5	White Diffused	19	600
657-1003-303F	Flat	White	12	White Diffused	20	500
657-1503-303F	Flat	Red	12	White Diffused	20	550
657-1603-303F	Flat	Green	12	White Diffused	20	250
657-1703-303F	Flat	Yellow	12	White Diffused	20	500
657-1803-303F	Flat	Blue	12	White Diffused	20	100
657-1903-303F	Flat	Orange	12	White Diffused	20	600
657-1004-303F	Flat	White	24	White Diffused	20	500
657-1504-303F	Flat	Red	24	White Diffused	19	550
657-1604-303F	Flat	Green	24	White Diffused	20	250
657-1704-303F	Flat	Yellow	24	White Diffused	19	500
657-1804-303F	Flat	Blue	24	White Diffused	20	100
657-1904-303F	Flat	Orange	24	White Diffused	19	600

**For Domed Lens Style, replace 4th digit with "2". For example; 657-1502-103F becomes 657-2502-103F*

Dialight Europe Ltd

Exning Road • Newmarket • Suffolk, United Kingdom, CB8 0AX

Tel :+44 (0)1638 666541 • www.dialight.com

A4703 UL REGISTERED FIRM ISO 9001

Dialight Corporation

Dialight Corporation

1501 Route 34 South • Farmingdale, NJ 07727 USA

Tel: (1) 732-919-3119 • Fax: (1) 732-751-5778 • www.dialight.com