APPROVED: _____

DATE: _____ TITLE: _____

Rev	AWO #	Description	Date	Appr
-		RELEASED	9/14/04	
A		REDRAWN	6/30/15	AY/MW

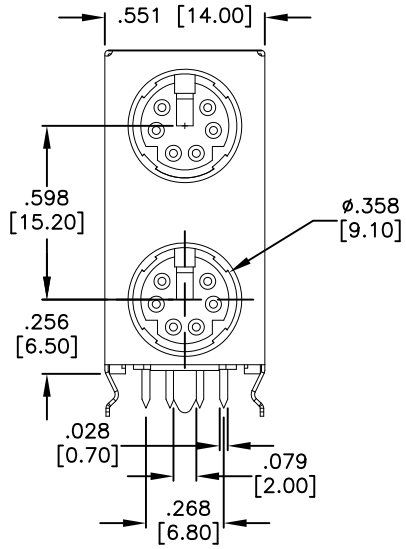

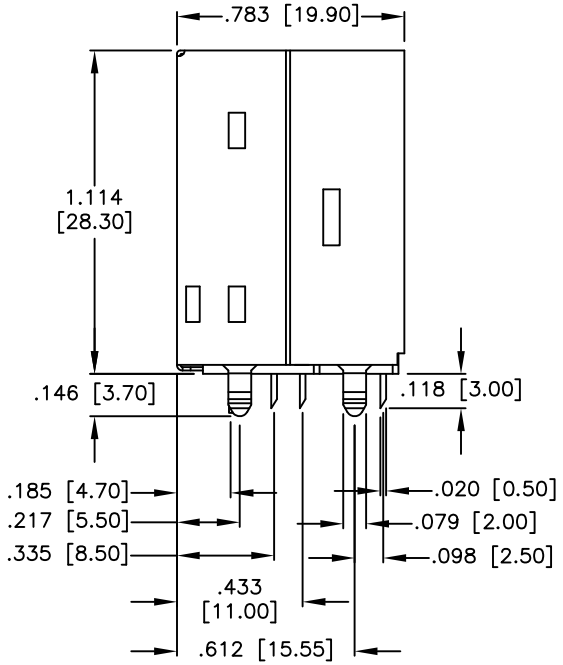

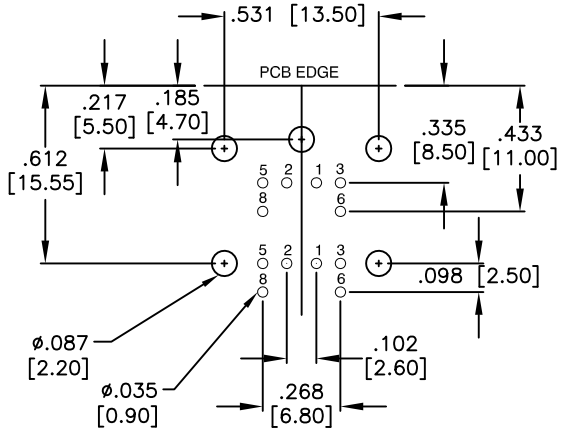

RECOMMENDED PCB LAYOUT

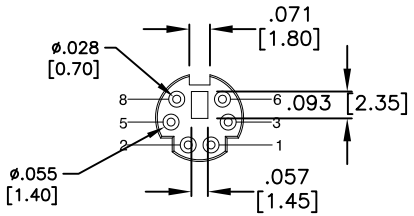

ARRANGEMENT OF CONTACTS

SPECIFICATIONS:
Material:
Insulator: PBT, glass filled, rated UL 94V–0
Insulator color: Black
Contacts: Phosphor Bronze
Shield: Copper Alloy, Tin plated
Plating:
Gold over Nickel underplate on contact area,
Tin over Copper underplate on tails
Electrical:
Operating voltage: 100 VAC/12 VDC max.
Current rating: 1 Amp max./2 Amps max.
Contact resistance: 30 mohms max. initial
Insulation resistance: 100 Mohms min @500 VDC.
Dielectric withstanding voltage: 250 VAC for 1 minute
Environmental:
Lead free, RoHS compliant.

RoHS COMPLIANT

UNLESS OTHERWISE SPECIFIED
ALL DIMENSIONS ARE INCHES [MM]
TOLERANCES: EXCEPT AS NOTED

INCHES		HOLES	
.X	± .10	Ø.X	±.10
.XX	± .020	Ø.XX	±.015
.XXX	± .015	Ø.XXX	±.010

APPROVALS		DATE
DRAWN	SS	9/14/04
CHECKED		
APPROVED		

ADAM TECH
909 Rahway Avenue, Union, NJ 07083
Phone: 908-687-5000 Fax: 908-687-5710

TITLE: MINI DIN JACK, STACKED 6 POSITION RIGHT ANGLE, FULLY SHIELDED

SIZE	PART NO.	REV.
X	MDJD-006-FS-RT	A

REF:	SCALE:	SHEET
S00095T	NTS	1 OF 1