MICRF104

1.8V, QwikRadio™ UHF ASK Transmitter

Final Information

General Description

The MICRF104 is a low voltage Transmitter IC for remote wireless applications. The device employs Micrel's latest QwikRadio™ technology. This device is a true "data-in, antenna-out" device. All antenna tuning is accomplished automatically within the IC which eliminates manual tuning, and reduces production costs. The result is a highly reliable yet extremely low cost solution for high volume wireless applications. The MICRF104 incorporates a DC/DC converter to boost the input voltage up to 5V for the RF portion of the IC. This feature enables the MICRF104 to operate off supply voltages as low as 1.8V and transmit at power in excess of –2dBm.

The MICRF104 uses a novel architecture where the external loop antenna is tuned to the internal UHF synthesizer. This transmitter is designed to comply worldwide UHF unlicensed band intentional radiator regulations. The IC is compatible with virtually all ASK/OOK (Amplitude Shift Keying/On-Off Keyed) UHF receiver types from wide-band super-regenerative radios to narrow-band, high performance super-heterodyne receivers. The transmitter is designed to work with transmitter data rates from 100 to 20k bits per second.

The automatic tuning in conjunction with the external resistor, insures that the transmitter output power stays constant for the life of the battery.

When coupled with Micrel's family of QwikRadio™ receivers, the MICRF104 provides the lowest cost and most reliable remote actuator and RF link system available.

Features

- Complete UHF transmitter on a chip
- Frequency range 300MHz to 470MHz
- Data rates to 20kbps
- Automatic antenna alignment, no manual adjustment
- Low external part count

Applications

- Remote Keyless Entry Systems (RKE)
- Remote Fan/Light Control
- Garage Door Opener Transmitters
- Remote Sensor Data Links

Ordering Information

Part Number	Temperature Range	Package
MICRF104BM	0°C to +85°C	14-Pin SOIC

Typical Application

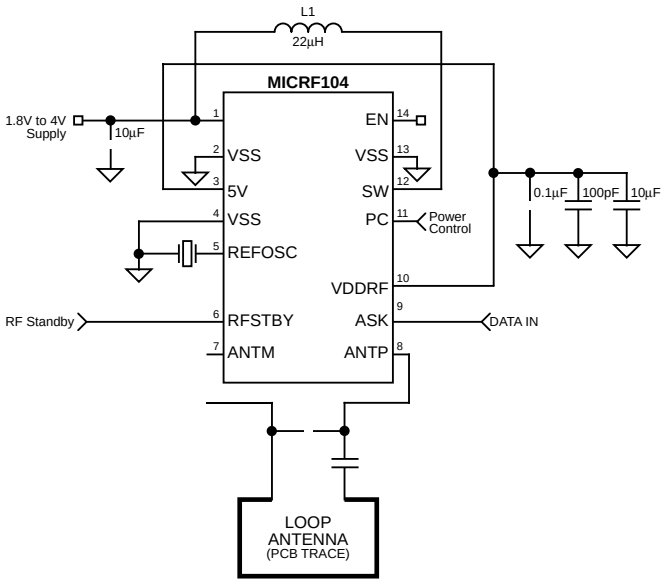

Figure 1

QwikRadio is a trademark of Micrel, Inc. The QwikRadio ICs were developed under a partnership agreement with AIT of orlando, Florida

Pin Configuration

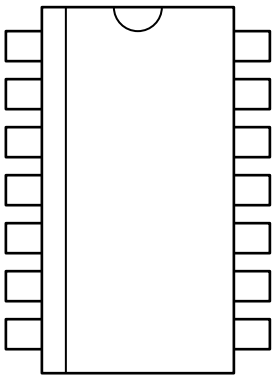

Pin Description

Pin Number	Pin Name	Pin Function
1	VDDPWR	Positive power supply input for the DC/DC converter.
2, 4, 13	VSS	Ground return
3	5V	5V Output from the DC / DC converter
5	REFOSC	This is the timing reference frequency which is the transmit frequency divided by 32. Connect a crystal (mode dependent) between this pin and VSS, or drive the input with an AC coupled 0.5Vpp input clock. See *Reference Oscillator* Section in this data sheet
6	RFSTBY	Input for transmitter standby control pin is pulled to VDDRF for transmit operation and VSS for stand-by mode.
7	ANTM	Negative RF power output to drive the low side of the transmit loop antenna
8	ANTP	Positive RF power output to drive the high side of the transmit loop antenna
9	ASK	Amplitude Shift Key modulation data input pin.
10	VDDRF	Positive power supply input for the RF circuit. A power supply bypass capacitor connected from VDDRF to VSS should have the shortest possible path.
11	PC	Power Control Input. The voltage at this pin should be set between 0.3V to 0.4V for normal operation.
12	SW	DC/DC converter Switch. NPN output switch transistor collector.
14	EN	Chip Enable input. Active high

Absolute Maximum Ratings (Note 1)

Supply Voltage(V_{DDPWR}, V_{DDRF}) ..... +6V
Voltage on I/O Pin EN ..... [tbd]
Voltage on I/O Pins, RFSTBY, ASK, PC, ANTP, ANTM
V_{SS}–0.3 to V_{DD}+0.3
Storage Temperature Range ..... -65°C to + 150°C
Lead Temperature (soldering, 10 seconds) ..... + 300°C
ESD Rating ..... Note 3

Operating Ratings (Note 2)

Supply Voltage (V_{DDPWR}) ..... 1.8V to 4V
PC Input Range ..... $0.15V < V_{PC} < 0.35V$
Ambient Operating Temperature (T_A) ..... 0°C to +85°C
Programmable Transmitter Frequency Range: 300MHz to 470MHz

Electrical Characteristics

Specifications apply for V_{DDPWR} = 1.8V, V_{PC} = 0.35V, $freq_{REFOSC}$ = 12.1875MHz, RFSTBY = V_{DDRF}, EN = V_{DDPWR}.
T_A = 25°C, **bold** values indicate 0°C ≤ T_A ≤ 85°C unless otherwise noted.

Parameter	Condition	Min	Typ	Max	Units
Power Supply					
Shutdown current, I_{VDDPWR}	EN = RFSTBY = V_{SS}		50		µA
RF Standby supply, I_{VDDPWR}	RFSTBY = V_{SS}, EN = V_{DDPWR}		1.5		mA
RF Standby supply, I_{VDDPWR}	RFSTBY = V_{SS}, EN = V_{DDPWR} = 4V		0.6		mA
MARK supply current, I_{ON}	Note 4,		31	**41**	mA
	Note 4, V_{DDPWR} = 4V		12	**17**	mA
SPACE supply current, I_{OFF}			22	**30**	mA
	V_{DDPWR} = 4V		9	**12**	mA
Mean operating current	33% mark/space ratio, Note 4		25	**34**	mA
	33% mark/space ratio, V_{DDRWR} = 4V, Note 4		10	**14**	mA
5V Max. output current		**15**			mA
	Note 9, V_{DDPWR} = 4V	**35**			mA
5V Output Voltage range	Note 9	**4.75**		**5.25**	V
RF Output Section and Modulation Limits:					
Output power level, P_{OUT}	@315MHz; Note 4, Note 5		–2		dBm
	@433MHz; Note 4, Note 5		–2.5		dBm
Transmitted Power	@315MHz		tbd		µV/m
	@433MHz		tbd		µV/m
Harmonics output	@ 315MHz 2nd harm. 3rd harm.		–46 –45		dBc
	@433 MHz 2nd harm. 3rd harm.		–50 –41		dBc
Extinction ratio for ASK		**40**	52		dBc
Varactor tuning range	**Note 7**	**5**	6.5	**8**	pF
Reference Oscillator Section					
Reference Oscillator Input Impedance			300		kΩ
Reference Oscillator Source Current			6		µA
Reference Oscillator Input Voltage (peak to peak)		**0.2**		**0.5**	V_{PP}

Parameter	Condition	Min	Typ	Max	Units
Digital / Control Section					
Calibration time	Note 8, ASK=HIGH		25		ms
Power amplifier output hold off time from STBY	Note 9, STDBY transition from LOW to HIGH Crystal, ESR < 20Ω		6		ms
Transmitter Stabilization Time	From External Reference (500mVpp)		10		ms
From STBY	Crystal, ESR < 20Ω		19		ms
Maximum Data rate - ASK modulation	Duty cycle of the modulating signal = 50%	**20**			kbits/s
V_{RFSTBY} Enable Voltage		**$0.75V_{DDRF}$**	$0.6V_{DDRF}$		V
STBY Sink Current			5	**6.5**	µA
V_{EN} Enable Voltage	High	**$0.95V_{DDPWR}$**			V
	Low			**0.3**	V
EN pin current		**–10**		**10**	µA
ASK pin	V_{IH}, input high voltage	$0.8V_{DDRF}$			V
	V_{IL}, input low voltage			$0.2V_{DDRF}$	V
ASK input current	ASK = 0V, 5.0V input current	–10	0.1	10	µA

Note 1. Exceeding the absolute maximum rating may damage the device.

Note 2. The device is not guaranteed to function outside its operating rating.

Note 3. Devices are ESD sensitive. Handling precautions recommended. Human body model, 1.5k in series with 100pF.

Note 4. Supply current and output power are a function of the voltage input on the PC (power control) pin. All specifications in the Electrical Characteristics table applies for condition V_{PC} = 350mV. Increasing the voltage on the PC pin will increase transmit power and also increase MARK supply current. Refer to the graphs "Output Power Versus PC Pin Voltage" and "Mark Current Versus PC Pin Voltage."

Note 5. Output power specified into a 50Ω equivalent load using the test circuit in Figure 5.

Note 6. Transmitted power measured 3 meters from the antenna using transmitter board TX102-2A in Figure 6.

Note 7. The Varactor capacitance tuning range indicates the allowable external antenna component variation to maintain tune over normal production tolerances of external components. Guaranteed by design not tested in production.

Note 8. When the device is first powered up or it loses power momentarily, it goes into the calibration mode to tune up the transmit antenna.

Note 9. After the release of the STDBY, the device requires an initialization time to settle the REFOSC and the internal PLL. The first MARK state (ASK HIGH) after exit from STDBY needs to be longer than the initialization time. The subsequent low to high transitions will be treated as data modulation whereby the envelope transition time will apply.

Note 10. The MICRF102 was tested to be Compliant to Part 15.231 for maximum allowable TX power, when operated in accordance with a loop antenna described in Figure 6.

Typical Characteristics

Output Power vs PC Pin Voltage

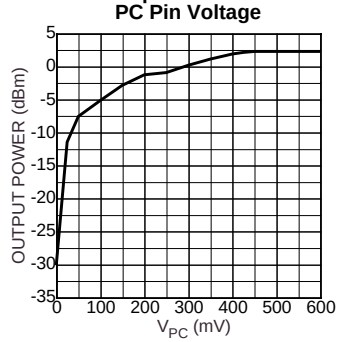

Mark Current vs PC Pin Voltage

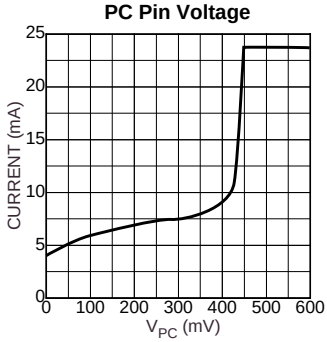

Functional Diagram

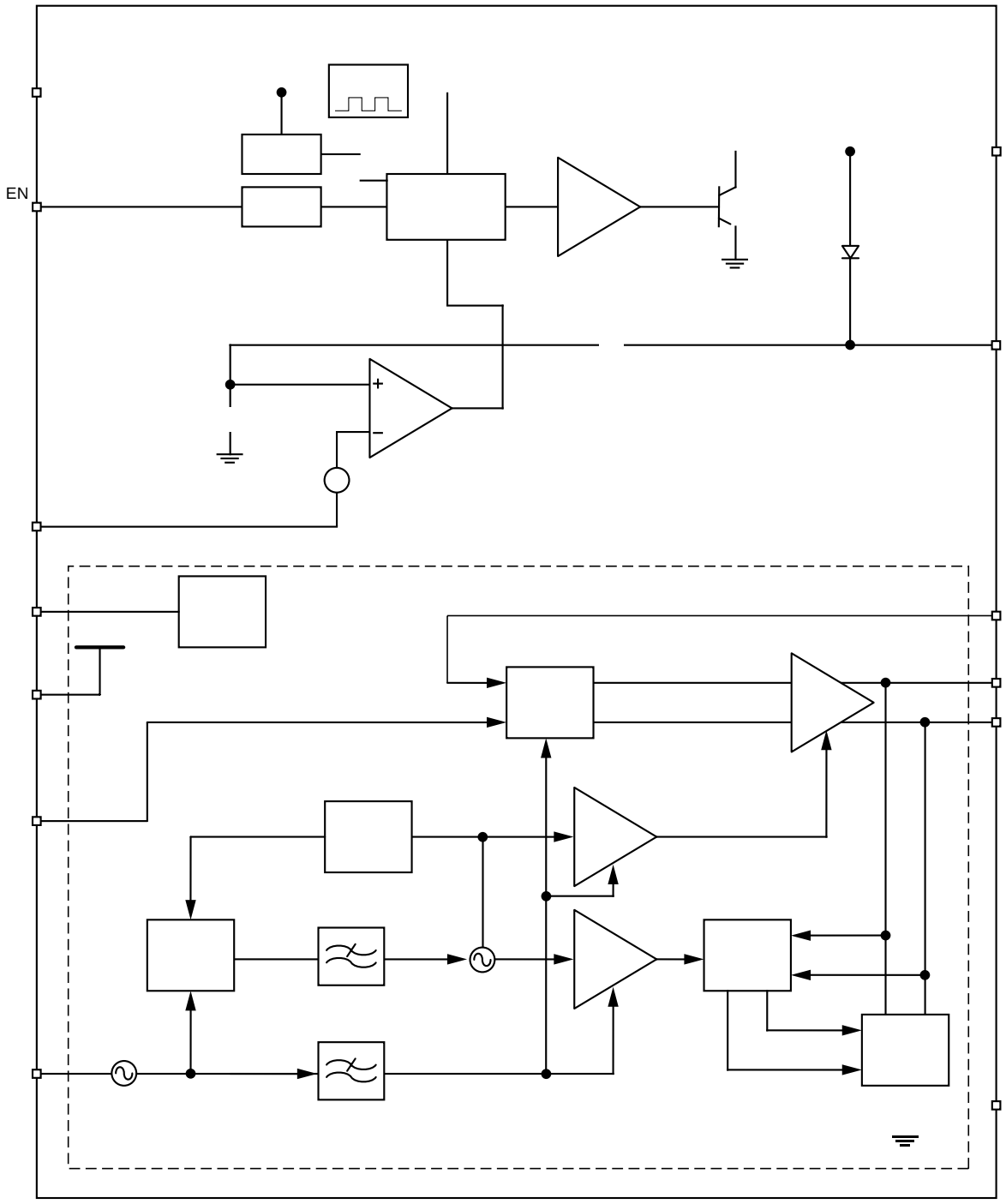

Functional Description

The block diagram illustrates the basic structure of the RF portion of the MICRF104. Identified in the figure are the principal functional blocks of the IC, namely the (1, 2, 3, 4, 5) UHF Synthesizer, (6a/b) Buffer, (7) Antenna tuner, (8) Power amplifier, (9) TX bias control, (10) Reference bias and (11) Process tuner.

The UHF synthesizer generates the carrier frequency with quadrature outputs. The in-phase signal (I) is used to drive the PA and the quadrature signal (Q) is used to compare the antenna signal phase for antenna tuning purpose.

a complete UHF transmitter for remote actuation applications such as automotive keyless entry.

Included within the IC is a differential varactor that serves as the tuning element to insure that the transmit frequency and antenna are aligned with the receiver over all supply and temperature variations.

Applications Information

Design Process

The MICRF104 transmitter design process is as follows:

1). Set the transmit frequency by providing the correct reference oscillator frequency

2). Ensure antenna resonance at the transmit frequency by:

a. Either, matching antenna inductance to the center of the tuning range of the internal varactor.

b. Or, matching capacitance with the antenna inductance by adding an external capacitor (in series with, or in parallel with, the internal varactor)

3). Set PC pin for desired transmit power.

Reference Oscillator Selection

An external reference oscillator is required to set the transmit frequency. The transmit frequency will be 32 times the reference oscillator frequency.

$$f_{TX} = 32 \times f_{REFOSC}$$

oscillator selection is critical to ensure operation. Crystals must be selected with an ESR of 20 Ohms or less. If a signal generator is used, the input amplitude must be greater than 200 mV_{P-P} and less than 500 mV_{P-P}.

Antenna Considerations

The MICRF104 is designed specifically to drive a loop antenna. It has a differential output designed to drive an inductive load. The output stage of the MICRF104 includes a varactor that is automatically tuned to the inductance of the antenna to ensure resonance at the transmit frequency.

A high-Q loop antenna should be accurately designed to set the center frequency of the resonant circuit at the desired transmit frequency. Any deviation from the desired frequency will reduce the transmitted power. The loop itself is an inductive element. The inductance of a typical PCB-trace antenna is determined by the size of the loop, the width of the antenna traces, PCB thickness and location of the ground plane. The tolerance of the inductance is set by the manufacturing tolerances and will vary depending how the PCB is manufactured.

In the simplest implementation a single capacitor in parallel with the antenna will provide the desired resonant circuit.

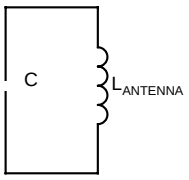

The resonant frequency is determined by the equation:

$$f = \sqrt{\frac{1}{4\pi^2 CL}}$$

tolerance of the capacitor in parallel with it will result in significant differences in resonant frequency from one transmitter to another. Many conventional loop antenna transmitters use a variable capacitor for manual tuning of the resonant circuit in production. Manual tuning increases cost and reduces reliability.

A capacitor correctly tuned during manufacture may drift over time and temperature. A change in capacitance will alter the resonant frequency and reduce radiated power. In addition, a hand close to the antenna will alter the resonant properties of the antenna and de-tune it.

The MICRF104 features automatic tuning. The MICRF104 automatically tunes itself to the antenna, eradicating the need for manual tuning in production. It also dynamically adapts to changes in impedance in operation and compensates for the hand-effect.

Automatic Antenna Tuning

The output stage of the MICRF104 consists of a variable capacitor (varactor) with a nominal value of 6.5pF tunable over a range from 5pF to 8pF. The MICRF104 monitors the phase of the signal on the output of the power amplifier and automatically tunes the resonant circuit by setting the varactor value at the correct capacitance to achieve resonance.

In the simplest implementation, the inductance of the loop antenna should be chosen such that the nominal value is resonant at 6.5pF, the nominal mid-range value of the MICRF104 output stage varactor.

Using the equation:

$$L = \frac{1}{4\pi^2 f^2 C}$$

value determined by the above equation, a capacitor can be added in parallel or series with the antenna. In this case, the varactor internal to the MICRF104 acts to trim the total capacitance value.

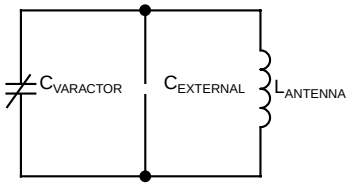

Starting with the inductance of the antenna the capacitance value required to achieve resonance can be calculated.

For example a 315MHz transmitter with a 45.1nH inductance antenna will require no capacitor in parallel with the antenna, only the internal varactor that will be tuned to 5.66pF, which is very close to mid range and can be determined using the equation:

$$C = \frac{1}{4\pi^2 f^2 L}$$

f = 315Mhz

L = 45.1nH

The value of the capacitor is calculated as 5.66pF.

Supply Bypassing

Correct supply bypassing is essential. A 4.7uF capacitor in parallel with a 100pF capacitor is required and an additional 0.1µF capacitor in parallel is recommended.

The MICRF104 is susceptible to supply-line ripple, if supply regulation is poor or bypassing is inadequate, spurs will be evident in the transmit spectrum.

Transmit Power

The transmit power specified in this datasheet is normalized to a 50Ohm load. The antenna efficiency will determine the actual radiated power. Good antenna design will yield transmit power in the range of 67dBµV/m to 80dBµV/m at 3 meters.

The PC pin on the MICRF104 is used to set the transmit power. The differential voltage on the output of the PA (power amplifier) is proportional to the voltage at the PC pin.

If the PC pin voltage rises above 0.4 V the output power becomes current limited. At this point, further increase in the PC pin voltage will not increase the RF output power in the antenna pins. Low power consumption is achieved by decreasing the voltage in the PC pin, also reducing the RF output power and maximum range.

Output Blanking

When the device is first powered up or after a momentary loss of power the output is automatically blanked (disabled). This feature ensures RF transmission only occurs under controlled conditions when the synthesizer is fully operational, preventing unintentional transmission at an undesired frequency. Output blanking is key to guaranteeing compliance with UHF regulations by ensuring transmission only occurs in the intended frequency band.

Package Information

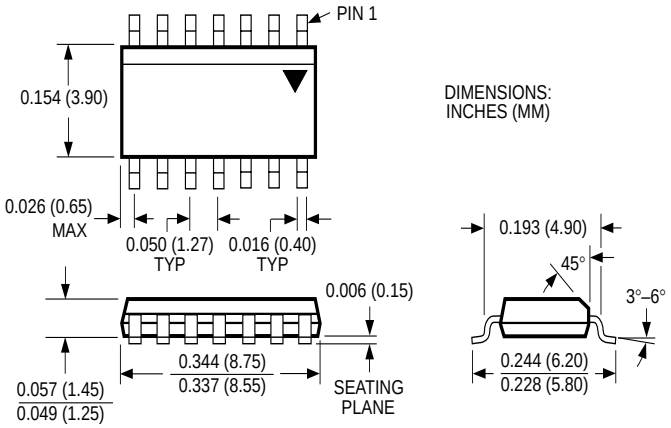

MICREL INC. 1849 FORTUNE DRIVE SAN JOSE, CA 95131 USA

TEL + 1 (408) 944-0800 FAX + 1 (408) 944-0970 WEB http://www.micrel.com

This information is believed to be accurate and reliable, however no responsibility is assumed by Micrel for its use nor for any infringement of patents or other rights of third parties resulting from its use. No license is granted by implication or otherwise under any patent or patent right of Micrel Inc.

© 2001 Micrel Incorporated