MICRF211

3V, QwikRadio® 433.92 MHz Receiver

General Description

The MICRF211 is a general purpose, 3V QwikRadio Receiver that operates at 433.92MHz with typical sensitivity of –110dBm.

The MICRF211 functions as a super-heterodyne receiver for OOK and ASK modulation up to 10kbps. The down-conversion mixer also provides image rejection. All post-detection data filtering is provided on the MICRF211. Any one-of-four filter bandwidths may be selected externally by the user in binary steps, from 1.25kHz to 10kHz. The user need only configure the device with a set of easily determined values, based upon data rate, code modulation format, and desired duty-cycle operation.

Datasheets and support documentation are available on Micrel's website at: www.micrel.com.

Features

- –110dBm sensitivity, 1kbps and BER 10^{-2}
- Image rejection mixer
- Frequency from 380MHz to 450MHz
- Low power, 6.0mA @ 433.92MHz, continuous on data rates to 10kbps (Manchester Encoded)
- Analog RSSI output
- No IF filter required
- Excellent selectivity and noise rejection
- Low external part count

Typical Application

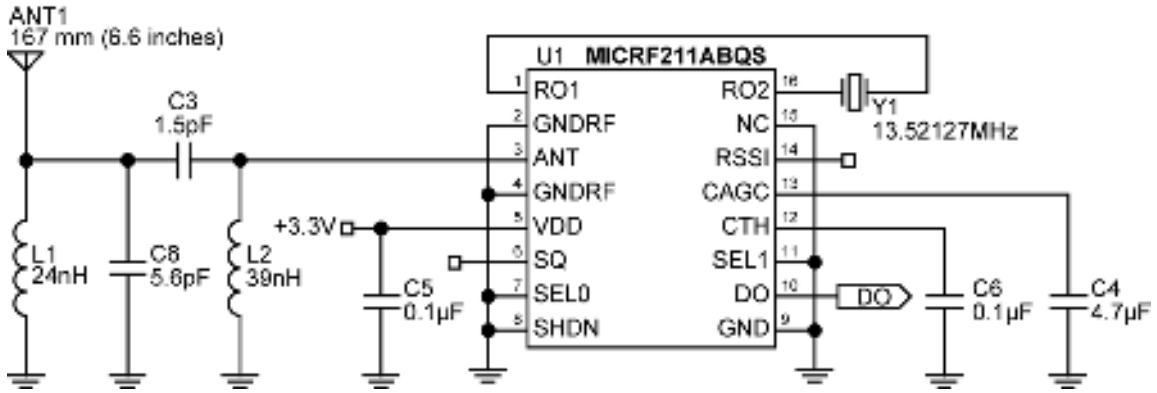

433.92 MHz, 1kHz Baud Rate Example

QwikRadio is a registered trademark of Micrel, Inc.
Certain of the QwikRadio ICs were developed under a development agreement with AIT of Orlando, FL.

Ordering Information

Part Number	Temperature Range	Package
MICRF211AYQS	–40° to +105°C	16-Pin QSOP

Pin Configuration

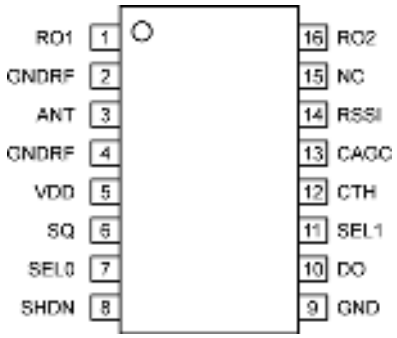

MICRF211AYQS

Pin Description

16-Pin QSOP	Pin Name	Pin Function
1	RO1	Reference resonator input connection to Colpitts oscillator stage. May also be driven by external reference signal of 1.5V p-p amplitude maximum.
2	GNDRF	Negative supply connection associated with ANT RF input.
3	ANT	RF signal input from antenna. Internally AC coupled. It is recommended that a matching network with an inductor -to-RF ground is used to improve ESD protection.
4	GNDRF	Negative supply connection associated with ANT RF input.
5	VDD	Positive supply connection for all chip functions.
6	SQ	Squelch control logic input with an active internal pull-up when not shut down.
7	SEL0	Logic control input with active internal pull-up. Used in conjunction with SEL1 to control the demodulator low pass filter bandwidth. (See filter table for SEL0 and SEL1 in application section)
8	SHDN	Shutdown logic control input. Active internal pull-up.
9	GND	Negative supply connection for all chip functions except RF input.
10	DO	Demodulated data output.
11	SEL1	Logic control input with active internal pull-up. Used in conjunction with SEL0 to control the demodulator low pass filter bandwidth. (See filter table for SEL0 and SEL1 in application section)
12	CTH	Demodulation threshold voltage integration capacitor connection. Tie an external capacitor across CTH pin and GND to set the settling time for the demodulation data slicing level. Values above 1nF are recommended and should be optimized for data rate and data profile.
13	CAGC	AGC filter capacitor connection. CAGC capacitor, normally greater than 0.47µF, is connected from this pin to GND
14	RSSI	Received signal strength indication output. Output is from a buffer with 200Ω typical output impedance.
15	NC	Not Connected (Connect to Ground)
16	RO2	Reference resonator input connection to Colpitts oscillator stage, 7pF, in parallel with low resistance MOS switch-to-GND, during normal operation. Driven by startup excitation circuit during the internal startup control sequence.

Absolute Maximum Ratings[1]

Supply Voltage (V_{DD}) ..... +5V
Input Voltage ..... +5V
Junction Temperature ..... +150ºC
Lead Temperature (soldering, 10sec.) ..... 260°C
Storage Temperature (T_S) ..... -65ºC to +150°C
Maximum Receiver Input Power ..... +10dBm
ESD Rating[3] ..... 2kV CDM
..... 200V HBM
..... 100V Machine Model

Operating Ratings[2]

Supply Voltage (V_{DD}) ..... +3.0V to +3.6V
Ambient Temperature (T_A) ..... –40°C to +105°C
Input Voltage (V_{IN}) ..... 3.6V (max.)
Maximum Input RF Power ..... –20dBm

Electrical Characteristics[4]

Specifications apply for 3.0V < V_{DD} < 3.6V, V_{SS} = 0V, C_{AGC} = 4.7µF, C_{TH} = 0.1µF, f_{RX} = 433.92MHz, unless otherwise noted. **Bold** values indicate –40°C – T_A – 105°C. 1kbps data rate (Manchester encoded), reference oscillator frequency = 13.52127MHz.

Symbol	Parameter	Condition	Min	Typ	Max	Units
I_{SS}	Operating Supply Current	Continuous Operation, f_{RX} = 433.92MHz		6.0		mA
I_{SHUT}	Shut down Current			0.5		µA
RF/IF Section						
	Image Rejection			20		dB
	1st IF Center Frequency	f_{RX} = 433.92MHz		1.2		MHz
	Receiver Sensitivity @ 1kbps	f_{RX} = 433.92MHz (matched to 50Ω) BER=10^{-2}		-110		dBm
	IF Bandwidth	f_{RX} = 433.92MHz		330		kHz
	Antenna Input Impedance	f_{RX} = 433.92MHz		19 – j174		Ω
	Receive Modulation Duty Cycle	Note 5	20		80	%
	AGC Attack / Decay Ratio	t_{ATTACK} / t_{DECAY}		0.1		
	AGC pin leakage current	T_A = 25ºC T_A = +105ºC		± 2 ± 800		nA nA
	AGC Dynamic Range	RF_{IN} @ -40dBm		1.15		V
		RF_{IN} @ -100dBm		1.70		V
Reference Oscillator						
	Reference Oscillator Frequency	f_{RX} = 433.92MHz Crystal Load Cap = 10pF		13.52127		MHz
	Reference Oscillator Input Impedance			300		kΩ
	Reference Oscillator Input Range		0.2		1.5	Vp-p
	Reference Oscillator Source Current	V(REFOSC) = 0V		3.5		µA

Electrical Characteristics[4]

Specifications apply for 3.0V < V_{DD} < 3.6V, V_{SS} = 0V, C_{AGC} = 4.7µF, C_{TH} = 0.1µF, f_{RX} = 433.92MHz, unless otherwise noted. **Bold** values indicate –40°C ≤ T_A ≤ 105°C. 1kbps data rate (Manchester encoded), reference oscillator frequency = 13.52127MHz.

Demodulator						
Symbol	**Parameter**	**Condition**	**Min**	**Typ**	**Max**	**Units**
	CTH Source Impedance	F_{REFOSC} = 13.52127MHz		120		kΩ
	CTH Leakage Current	T_A = 25ºC T_A = +105ºC		± 2 ± 800		nA nA
	Demodulator Filter Bandwidth @ 434MHz	Programmable, see application section	1625		13000	Hz
Digital / Control Functions						
	DO pin output current	As output source @ 0.8 Vdd sink @ 0.2 Vdd		260 600		µA
	Output rise and fall times	Cl = 15pF, pin DO, 10-90%		2		µsec
RSSI						
	RSSI DC Output Voltage Range			0.4 to 2		V
	RSSI response slope	-110dBm to -40dBm		25		mV/dB
	RSSI Output Current			400		µA
	RSSI Output Impedance			200		Ω
	RSSI Response Time	50% data duty cycle, input power to Antenna = -20dBm		0.3		sec

Notes:

1. Exceeding the absolute maximum ratings may damage the device.
2. The device is not guaranteed to function outside its operating ratings.
3. Device is ESD sensitive. Use appropriate ESD precautions. Exceeding the absolute maximum rating may damage the device.
4. Sensitivity is defined as the average signal level measured at the input necessary to achieve 10-2 BER (bit error rate). The input signal is defined as a return-to-zero (RZ) waveform with 50% average duty cycle (Manchester encoded) at a data rate of 1kbps.
5. When data burst does not contain preamble, duty cycle is defined as total duty cycle, including any “quiet” time between data bursts. When data bursts contain preamble sufficient to charge the slice level on capacitor Cth, then duty cycle is the effective duty cycle of the burst alone. [For example, 100msec burst with 50% duty cycle, and 100msec “quiet” time between bursts. If burst includes preamble, duty cycle is Ton/(Ton+toff)= 50%; without preamble, duty cycle is Ton/(Ton+ Toff + Tquiet) = 50msec/(200msec)=25%. Ton is the (Average number of 1’s/burst) × bit time, and Toff = Tburst – Ton.)

Typical Characteristics

Sensitivity Graphs

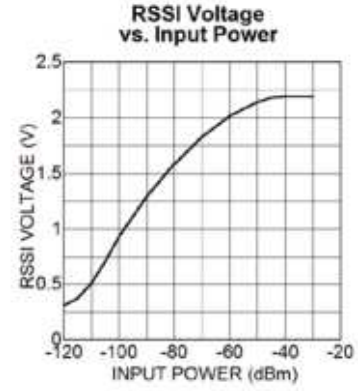

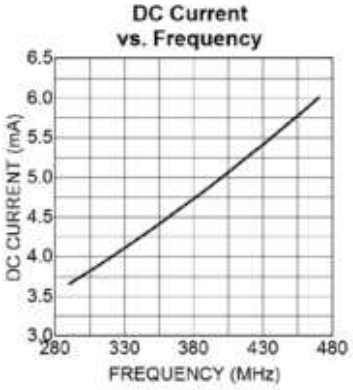

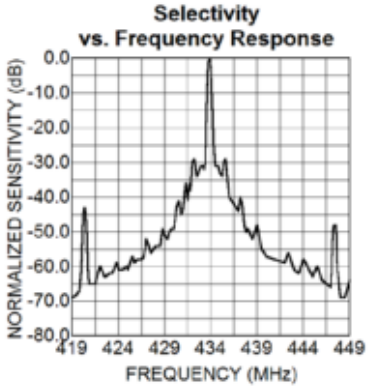

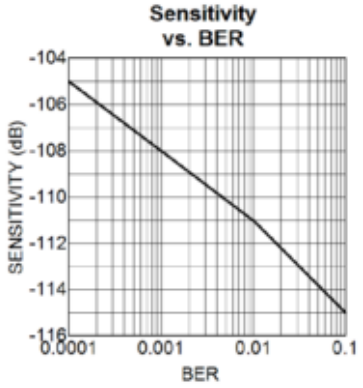

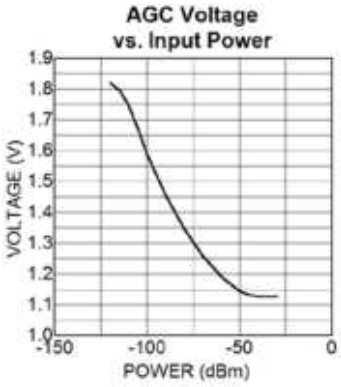

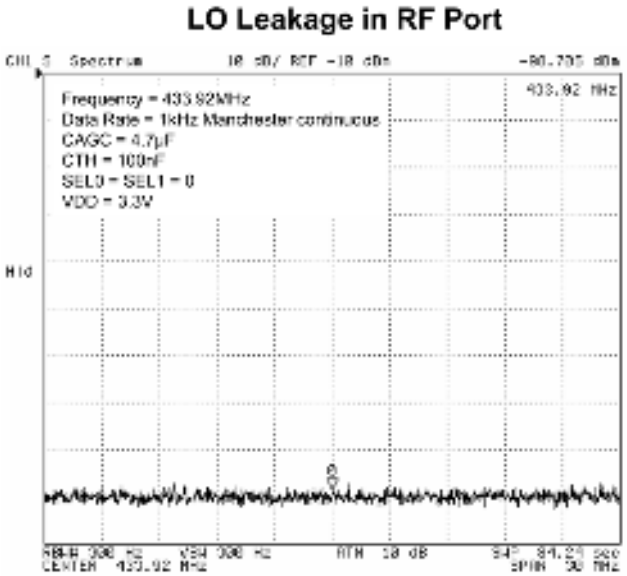

Functional Diagram

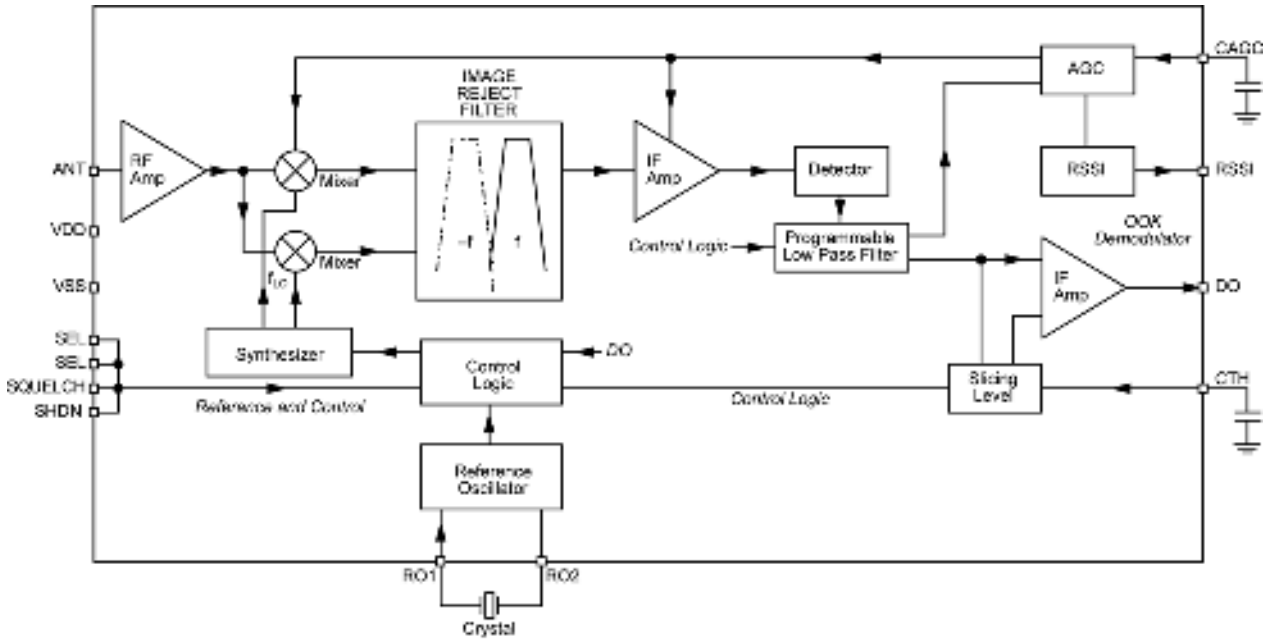

Figure 1. Simplified Block Diagram.

Functional Description

Figure 1. Simplified Block Diagram that illustrates the basic structure of the MICRF211. It is made of three sub-blocks; Image Rejection UHF Down-converter, the OOK Demodulator, and Reference and Control Logics. Outside the device, the MICRF211 requires only three components to operate: two capacitors (CTH, and CAGC) and the reference frequency device, usually a quartz crystal. An additional five components may be used to improve performance. These are: power supply decoupling capacitor, two components for the matching network, and two components for the pre-selector band pass filter.

Receiver Operation

LNA

The RF input signal is AC-coupled into the gate circuit of the grounded source LNA input stage. The LNA is a Cascoded NMOS.

Mixers and Synthesizer

The LO ports of the Mixers are driven by quadrature local oscillator outputs from the synthesizer block. The local oscillator signal from the synthesizer is placed on the low side of the desired RF signal to allow suppression of the image frequency at twice the IF frequency below the wanted signal. The local oscillator is set to 32 times the crystal reference frequency via a phase-locked loop synthesizer with a fully integrated loop filter.

Image Reject Filter and Band-Pass Filter

The IF ports of the mixer produce quadrature down converted IF signals. These IF signals are low-pass filtered to remove higher frequency products prior to the image reject filter where they are combined to reject the image frequencies. The IF signal then passes through a third order band pass filter. The IF center frequency is 1.2MHz. The IF BW is 330kHz @ 433.92MHz, and this varies with RF operating frequency. The IF BW can be calculated via direct scaling:

$$BW_{IF} = BW_{IF@433.92\ MHz} \times \left(\frac{\text{Operating Freq (MHz)}}{433.92} \right)$$

These filters are fully integrated inside the MICRF211.

After filtering, four active gain controlled amplifier stages enhance the IF signal to proper level for demodulation.

OOK Demodulator

The demodulator section is comprised of detector, programmable low pass filter, slicer, and AGC comparator.

Detector and Programmable Low-Pass Filter

The demodulation starts with the detector removing the

carrier from the IF signal. Post detection, the signal becomes base band information. The programmable low-pass filter further enhances the base band information. There are four programmable low-pass filter BW settings: 1625Hz, 3250Hz, 6500Hz, 13000Hz for 433.92MHz operation. Low pass filter BW will vary with RF Operating Frequency. Filter BW values can be easily calculated by direct scaling. See equation below for filter BW calculation:

$$BW_{Operating\ Freq} = BW_{@433.92MHz}^{*} \left(\frac{Operating\ Freq\ (MHz)}{433.92} \right)$$

It is very important to choose the filter setting that best fits the intended data rate to minimize data distortion.

Demod BW is set at 13000Hz @ 433.92MHz as default (assuming both SEL0 and SEL1 pins are floating). The low pass filter can be hardware set by external pins SEL0 and SEL1.

SEL0	SEL1	Demod BW (@ 434MHz)
0	0	1625Hz
1	0	3250Hz
0	1	6500Hz
1	1	13000Hz - default

Table 1: Demodulation BW Selection

Slicer, Slicing Level and Squelch

The signal prior to slicer is still linear demodulated AM. Data slicer converts this signal into digital “1”s and “0”s by comparing with the threshold voltage built up on the CTH capacitor. This threshold is determined by detecting the positive and negative peaks of the data signal and storing the mean value. Slicing threshold default is 50%. After the slicer the signal is now digital OOK data.

During long periods of “0”s or no data period, threshold voltage on the CTH capacitor may be very low. Large random noise spikes during this time may cause erroneous “1”s at DO pin. Squelch pin when pull down low will suppress these errors.

AGC Comparator

The AGC comparator monitors the signal amplitude from the output of the programmable low-pass filter. When the output signal is less than 750mV thresh-hold, 1.5µA current is sourced into the external CAGC capacitor. When the output signal is greater than 750mV, a 15µA current sink discharges the CAGC capacitor. The voltage developed on the CAGC capacitor acts to adjust the gain of the mixer and the IF amplifier to compensate for RF input signal level variation.

Reference Control

There are 2 components in Reference Control sub-block: 1) Reference Oscillator and 2) Control Logic through parallel Inputs: SEL0, SEL1, SHDN

Reference Oscillator

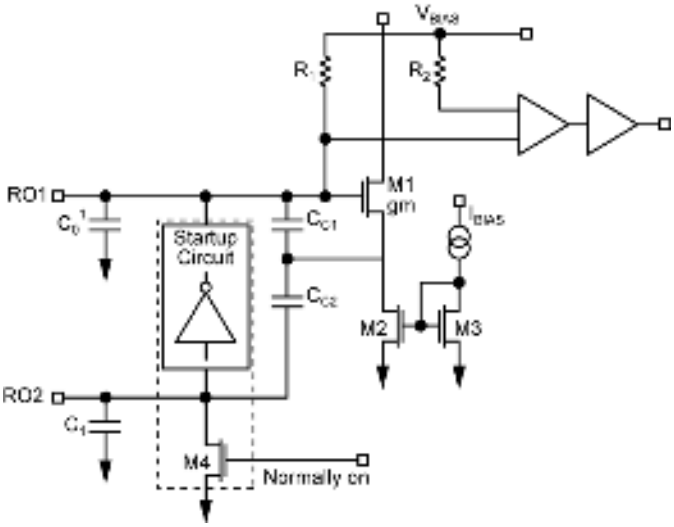

Figure 2: Reference Oscillator Circuit

The reference oscillator in the MICRF211 (Figure 2) uses a basic Colpitts crystal oscillator configuration with MOS transconductor to provide negative resistance. All capacitors shown in Figure 2 are integrated inside MICRF211. R01 and R02 are external pins of MICRF211. User only needs to connect reference oscillation crystal.

Reference oscillator crystal frequency can be calculated:

$F_{REF\ OSC} = F_{RF}/(32 + 1.1/12)$

For 433.92 MHz, $F_{REF\ OSC}$ = 13.52127 MHz.

To operate the MICRF211 with minimum offset, crystal frequencies should be specified with 10pF loading capacitance.

Application Information

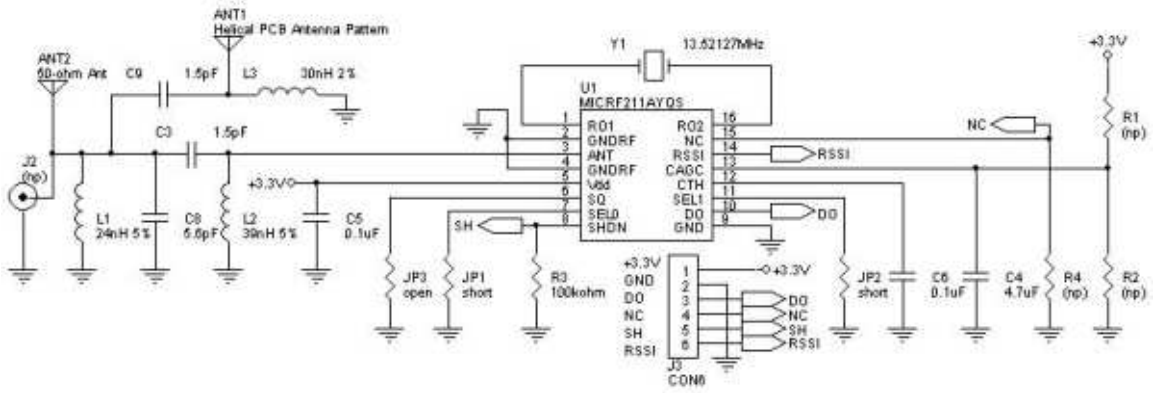

Figure 3 – QR211HE1 Application Example, 433.92 MHz

The MICRF211 can be fully tested by using one of many evaluation boards designed at Micrel for this device. As an entry level, the QR211HE1 (Figure 3) offers a good start for most applications. It has a helical PCB antenna with its matching network, a band-pass-filter front-end as a pre-selector filter, matching network and the minimum components required to make the device work, which are a crystal, Cagc, and Cth capacitors. By removing the matching network of the helical PCB antenna (C9 and L3), a whip antenna (ANT2) or a RF connector (J2) can be used instead. Figure 3 shows the entire schematic of it for 433.92MHz. Other frequencies can be used and the values needed are in the tables below.

Capacitor C9 and inductor L3 are the passive elements for the helical PCB matching network. A tight tolerance is recommended for these devices, like 2% for the inductor and 0.1pF for the capacitor. PCB variations may require different values and optimization. Table 2 shows the matching elements for the device frequency range. For additional information look for Small PCB Antennas for Micrel RF Products application note.

Freq (MHz)	C9 (pF)	L3(nH)
390.0	**1.2**	43
418.0	**1.2**	36
433.92	1.5	30

Table 2. Matching Values for the Helical PCB Antenna

To use another antenna, like the whip kind, remove C9 and place the whip antenna in the hole provided in the PCB. Also, a RF signal can be injected there.

L1 and C8 form the pass-band-filter front-end. Its purpose is to attenuate undesired outside band noise which reduces the receiver performance. It is calculated by the parallel resonance equation f = 1/(2×PI×(SQRT L1×C8)). Table 3 shows the most used frequency values.

Freq (MHz)	C8 (pF)	L1(nH)
390.0	**6.8**	24
418.0	**6.0**	24
433.92	5.6	24

Table 3. Band-Pass-Filter Front-End Values

There is no need for the band-pass-filter front-end for applications where it is proven that the outside band noise does not cause a problem. The MICRF211 has image reject mixers which improve significantly the selectivity and rejection of outside band noise.

Capacitor C3 and inductor L2 form the L-shape matching network. The capacitor provides additional attenuation for low frequency outside band noise and the inductor provides additional ESD protection for the antenna pin. Two methods can be used to find these values, which are matched close to 50Ω. One method is done by calculating the values using the equations below and another by using a Smith chart. The latter is made easier by using software that plots the values of the components C8 and L1, like WinSmith by Noble Publishing.

To calculate the matching values, one needs to know the input impedance of the device. Table 4 shows the input impedance of the MICRF211 and suggested matching values for the most used frequencies. These suggested values may be different if the layout is not exactly the same as the one made here.

Freq (MHz)	C3 (pF)	L2(nH)	Z device (Ω)
390.0	1.5	47	22.5 – j198.5
418.0	1.5	43	21.4 – j186.1
433.92	1.5	39	18.6 – j174.2

Table 4: matching values for the most used frequencies

For the frequency of 433.92MHz, the input impedance is Z = 18.6 – j174.2Ω, then the matching components are calculated by,

Equivalent parallel = B = 1/Z = 0.606 + j5.68 msiemens

Rp = 1 / Re (B); Xp = 1 / Im (B)

Rp = 1.65kΩ; Xp = 176.2Ω

Q = SQRT (Rp/50 + 1)

Q = 5.831

Xm = Rp / Q

Xm = 282.98Ω

Resonance Method For L-shape Matching Network

Lc = Xp / (2×Pi×f); Lp = Xm / (2×Pi×f)

L2 = (Lc×Lp) / (Lc + Lp); C3 = 1 / (2×Pi×f×Xm)

L2 = 39.8nH

C3 = 1.3pF

Doing the same calculation example with the Smith Chart, it would appear as follows,

First, we plot the input impedance of the device, (Z = 18.6 – j174.2)Ω @ 433.92MHz.(Figure 4).

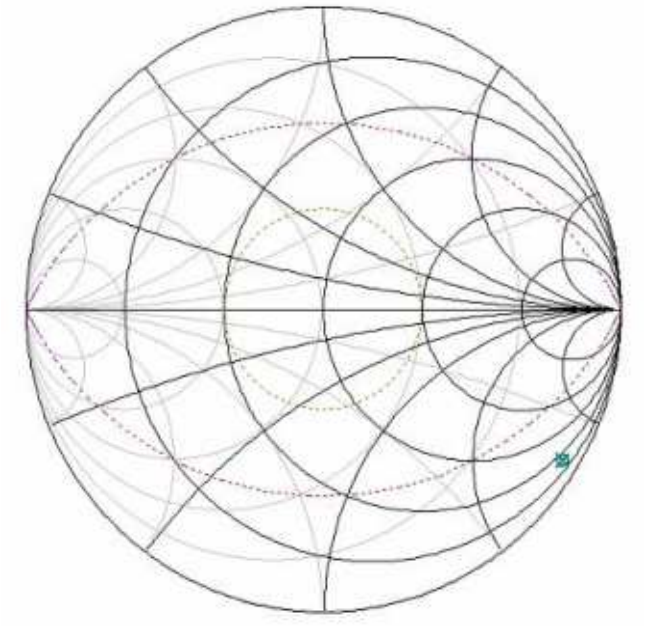

Figure 4: device's input impedance, Z = 18.6 – j174.2Ω

Second, we plot the shunt inductor (39nH) and the series capacitor (1.5pF) for the desired input impedance (Figure 5). We can see the matching leading to the center of the Smith Chart or close to 50Ω.

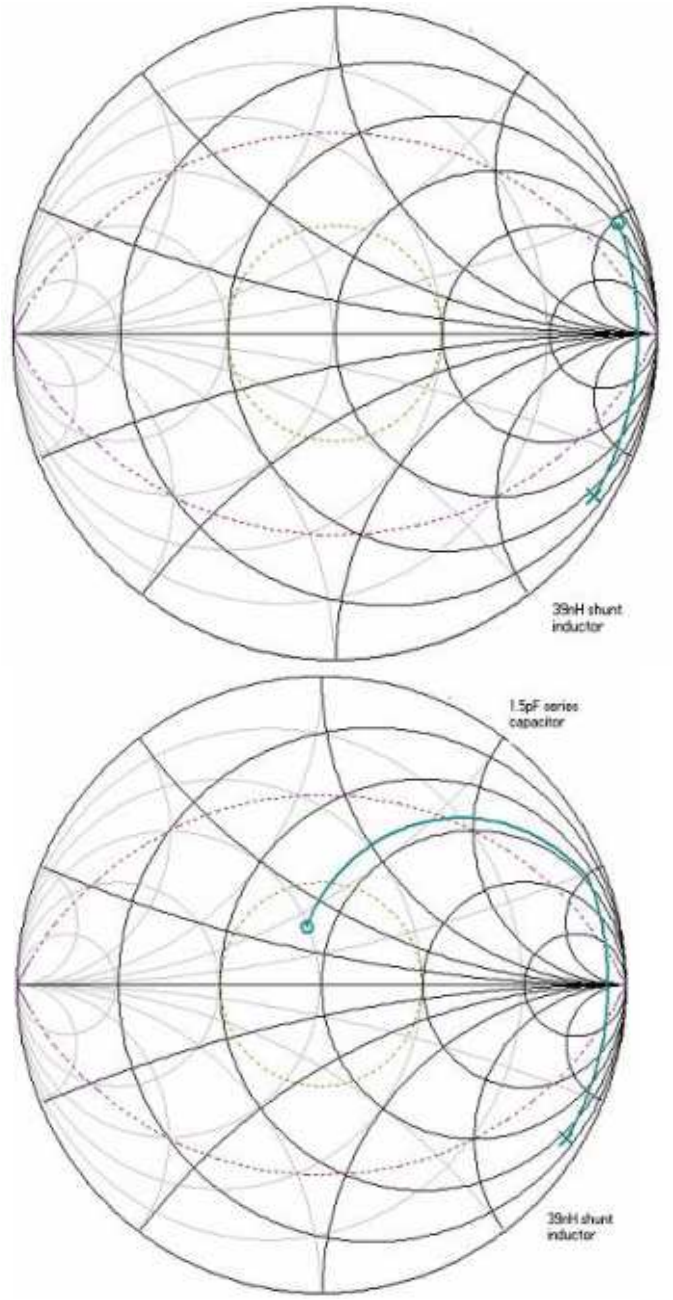

Figure 5. Plotting the Shunt Inductor and Series Capacitor.

Crystal Y1 or Y1A (SMT or leaded respectively) is the reference clock for all the device internal circuits. Crystal characteristics of 10pF load capacitance, 30ppm, ESR < 50Ω, -40ºC to +105ºC temperature range are desired. Table 5 shows the crystal frequencies and one of Micrel's approved crystal manufacturers (www.hib.com.br).

The oscillator of the MICRF211 is a Colpitts type. It is very sensitive to stray capacitance loads. Thus, very good care must be taken when laying out the printed circuit board. Avoid long traces and ground plane on the top layer close to the REFOSC pins RO1 and RO2. When care is not taken in the layout, and crystals from other vendors are used, the oscillator may take longer times to start as well as the time to good data in the DO pin to show up. In some cases, if the stray capacitance is too high (> 20pF), the oscillator may not start at all.

The crystal frequency is calculated by REFOSC = RF Carrier/(32+(1.1/12)). The local oscillator is low side injection (32 × 13.52127MHz = 432.68MHz), that is, its frequency is below the RF carrier frequency and the image frequency is below the LO frequency. See Figure 6. The product of the incoming RF signal and local oscillator signal will yield the IF frequency, which will be demodulated by the detector of the device.

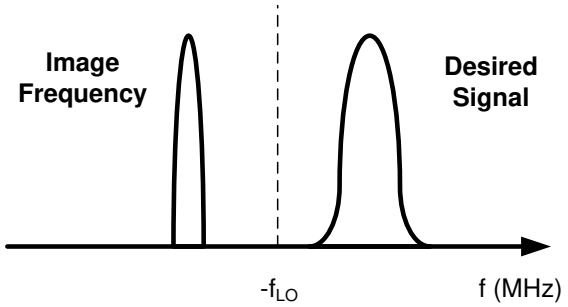

Figure 6. Low Side Injection Local Oscillator.

REFOSC (MHz)	Carrier (MHz)	HIB Part Number
12.15269	390.0	SA-12.152690-F-10-H-30-30-X
13.02519	418.0	SA-13.025190-F-10-H-30-30-X
13.52127	433.92	SA-13.521270-F-10-H-30-30-X

Table 5. Crystal Frequency and Vendor Part Number.

JP1 and JP2 are the bandwidth selection for the demodulator bandwidth. To set it correctly, it is necessary to know the shortest pulse width of the encoded data sent in the transmitter. Like in the example of the data profile in the figure 7 below, PW2 is shorter than PW1, so PW2 should be used for the demodulator bandwidth calculation which is found by 0.65/shortest pulse width. After this value is found, the setting should be done according to Table 6. For example, if the pulse period is 100µsec, 50% duty cycle, the pulse width will be 50µsec (PW = (100µsec × 50%) / 100). So, a bandwidth of 13kHz would be necessary (0.65 / 50µsec). However, if this data stream had a pulse period with 20% duty cycle, the bandwidth required would be 32.5kHz (0.65 / 20µsec), which exceeds the maximum bandwidth of the demodulator circuit. If one tries to exceed the maximum bandwidth, the pulse would appear stretched or wider.

SEL0 JP1	SEL1 JP2	Demod. BW (hertz)	Shortest Pulse (µsec)	Maximum baud rate for 50% Duty Cycle (hertz)
Short	Short	1625	400	1250
Open	Short	3250	200	2500
Short	Open	6500	100	5000
Open	Open	13000	50	10000

Table 6. JP1 and JP2 setting, 433.92 MHz.

Other frequencies will have different demodulator bandwidth limits, which are derived from the reference oscillator frequency. Table 7 and Table 8 below shows the limits for the other two most used frequencies.

SEL0 JP1	SEL1 JP2	Demod. BW (hertz)	Shortest Pulse (µsec)	Maximum baud rate for 50% Duty Cycle (hertz)
Short	Short	1565	416	1204
Open	Short	3130	208	2408
Short	Open	6261	104	4816
Open	Open	12523	52	9633

Table 7. JP1 and JP2 setting, 418.0 MHz.

SEL0 JP1	SEL1 JP2	Demod. BW (hertz)	Shortest Pulse (µsec)	Maximum baud rate for 50% Duty Cycle (Hertz)
Short	Short	1460	445	1123
Open	Short	2921	223	2246
Short	Open	5842	111	4493
Open	Open	11684	56	8987

Table 8. JP1 and JP2 setting, 390.0 MHz.

Capacitors C6 and C4, C_{TH} and C_{AGC} respectively provide time base reference for the data pattern received. These capacitors are selected according to data profile, pulse duty cycle, dead time between two received data packets, and if the data pattern has or does not have a preamble. See Figure 7, example of a data profile.

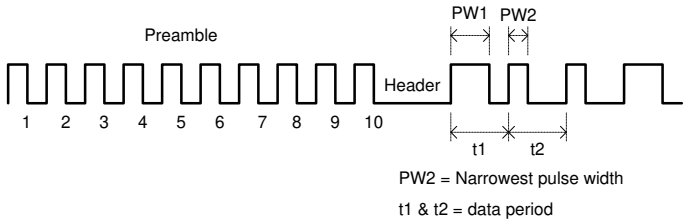

Figure 7. Example of a Data Profile.

For best results the capacitors should always be optimized for the data pattern used. As the baud rate increases, the capacitor values decrease. Table 9 shows suggested values for Manchester Encoded data, 50% duty cycle.

SEL0 JP1	SEL1 JP2	Demod. BW (hertz)	Cth	Cagc
Short	Short	1625	100nF	4.7µF
Open	Short	3250	47nF	2.2µF
Short	Open	6500	22nF	1µF
Open	Open	13000	10nF	0.47µF

Table 9. Suggested C_{TH} and C_{AGC} Values.

JP3 is a jumper used to configure the digital squelch function. When it is high, there is no squelch applied to the digital circuits and the DO (data out) pin has a hash signal. When the pin is low, the DO pin activity is

considerably reduced. It will have more or less than shown in the figure below depending on the outside band noise. The penalty for using squelch is a delay in getting a good signal in the DO pin, that is, it takes longer for the data to show up. The delay is dependent upon many factors such as RF signal intensity, data profile, data rate, C_{TH} and C_{AGC} capacitor values, and outside band noise. See Figure 8 and Figure 9 below.

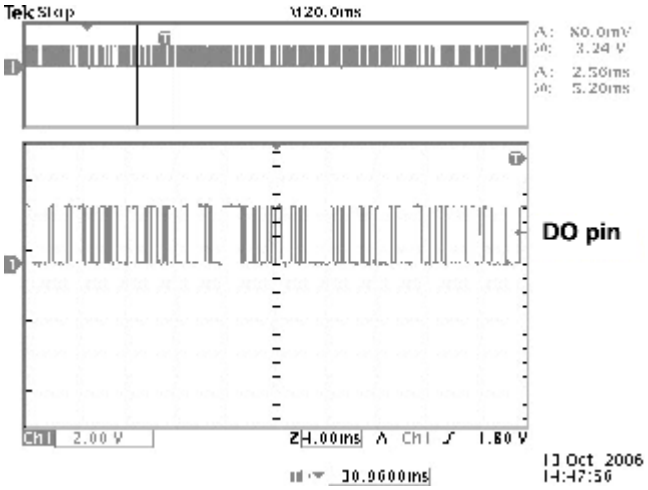

Figure 8. Data Out Pin with No Squelch (SQ = 1).

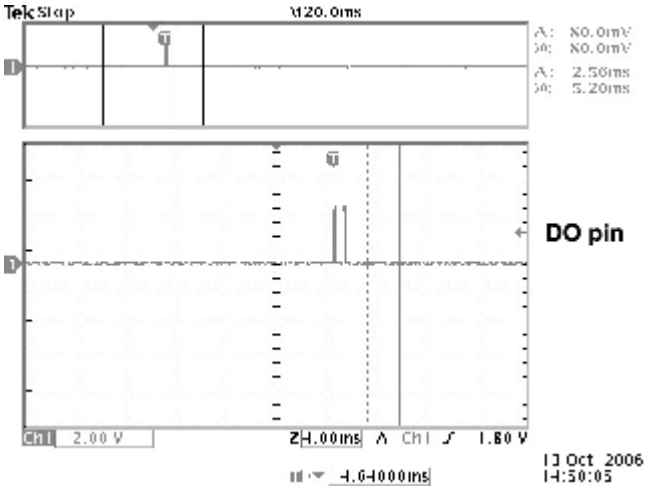

Figure 9. Data Out Pin with Squelch (SQ = 0).

Other components used are C5, which is a decoupling capacitor for the Vdd line, R4 reserved for future use and not needed for the evaluation board, R3 for the shutdown pin (SHDN = 0, device is operation), which can be removed if that pin is connected to a microcontroller or an external switch, R1 and R2 which form a voltage divider for the AGC pin. One can force a voltage in this AGC pin to purposely decrease the device sensitivity. Special care is needed when doing this operation, as an external control of the AGC voltage may vary from lot to lot and may not work the same for several devices.

Three other pins are worthy of comment. They are the DO, RSSI, and shut down pins. The DO pin has a driving capability of 0.4mA. This is good enough for most of the logic family ICs in the market today. The RSSI pin provides a transfer function of the RF signal intensity vs voltage. It is very useful to determine the signal to noise ratio of the RF link, crude range estimate from the transmitter source and AM demodulation, which requires a low C_{AGC} capacitor value.

The shut down pin (SHDN) is useful to save energy. When its level close to V_{DD} (SHDN = 1), the device is not in operation. Its DC current consumption is less than 1µA (do not forget to remove R3). When toggling from high to low, there will be a time required for the device to come to steady state mode, and a time for data to show up in the DO pin. This time will be dependent upon many things such as temperature, crystal used, and if the there is an external oscillator with faster startup time. Normally, with the crystal vendors suggested, the data will show up in the DO pin around 1msec time, and 2msec over the temperature range of the device. When using an external oscillator or reference oscillator signal, the time is reduced considerably and can be around 140µsec. See Figures Figure 10 and 11.

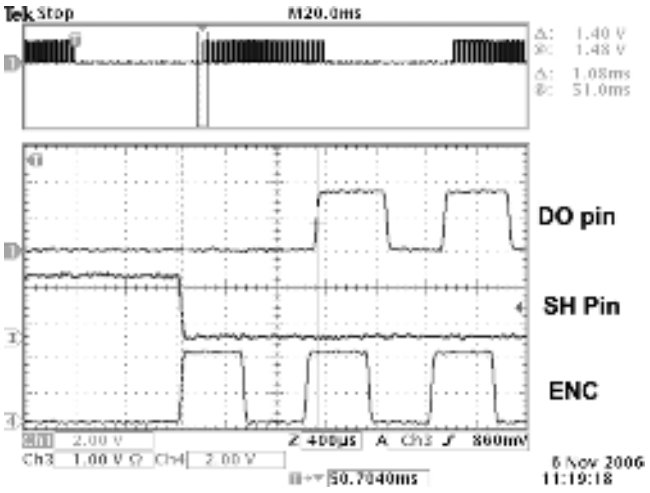

Figure 10: Time-to-Good Data After Shut Down Cycle, Room Temperature.

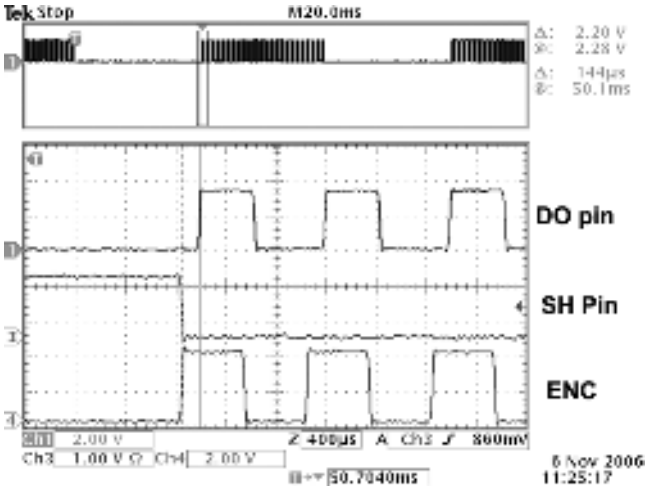

Figure 11. Time to Good Data, External Oscillator, Room Temperature.

Important Note

A few customers have reported that some MICRF211 receiver do not start up correctly. When the issue occurs, DO either chatters or stays at low voltage level. An unusual operating current is observed and the part cannot receive or demodulate data even when a strong OOK signal is present.

Micrel has confirmed that this is the symptom of incorrect power on reset (POR) of internal register bits. The MICRF211 is designed to start up in shutdown mode (SHDN pin must be in logic high during Vdd ramp up). When the SHDN pin is tied to GND, and if the supply is ramped up slowly, a "test bus pull down" circuit may be activated. Once the chip enters this mode, the POR does not have the chance to set register bits (and hence operating modes) correctly. The test bus pull down acts on the SHDN pin, and can be illustrated in the following diagram.

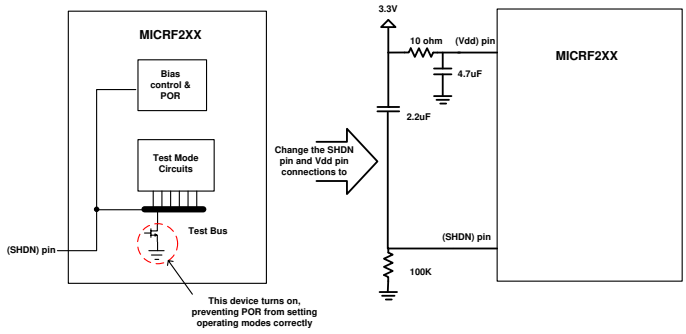

To prevent the erroneous startup, a simple RC network is recommended. The 10Ω resistor and the 4.7µF capacitor provide a delay of about 200µs between VDD and SHDN during power up, thus ensuring the part enters the shutdown stage before the part is actually turned on. The 2.2µF capacitor bootstraps the voltage on SHDN, ensuring that SHDN voltage leads the supply voltage on VDD during power up. This gives the POR circuit time to set internal register bits. The SHDN pin can be brought low to turn the chip on once the initialization is completed. The 2.2µF and 100kΩ network form a RC delay of about 200ms before the SHDN pin is brought to low again. The 100kΩ resistor discharges the SHDN pin to turn the chip on.

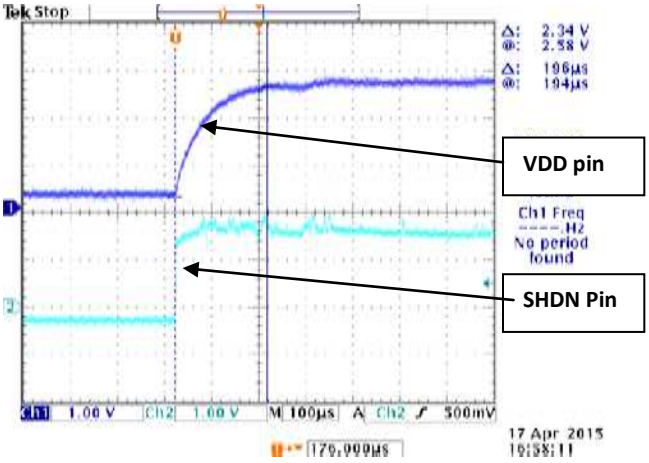

The suggestion provided above will generally serve to prevent the startup issue from happening to the MICRF211 series ASK receiver. However, exact values of the RC network depend on the ramp rate of the supply voltage, and should be determined on a case-by-case basis.

PCB Considerations and Layout

Figures 12 to 17 below show some of the printed circuit layers for the QR211HE1 board. Use the Gerber files provided (downloadable from Micrel Website) which have the remaining layers needed to fabricate this board. When copying or making your own boards, make traces as short as possible. Long traces alter the matching network and the values suggested are no longer valid. Suggested Matching Values may vary due to PCB variations. A PCB trace 100 mills (2.5mm) long has about 1.1nH inductance. Optimization should always be done with exhaustive range tests. Make individual ground connections to the ground plane with a Via for each ground connection. Do not share Vias with ground connections. Each ground connection = 1 via or more vias. Ground plane must be solid and possibly without interruptions. Avoid ground plane on top next to the matching elements. It normally adds additional stray capacitance which changes the matching. Do not use phenolic material, only FR4 or better materials. Phenolic material is conductive above 200MHz. RF path should be as straight as possible avoiding loops and unnecessary turns. Separate ground and V_{DD} lines from other circuits (microcontroller, etc). Known sources of noise should be laid out as far as possible from the RF circuits. Avoid thick traces, the higher the frequency, the thinner the trace should be in order to minimize losses in the RF path.

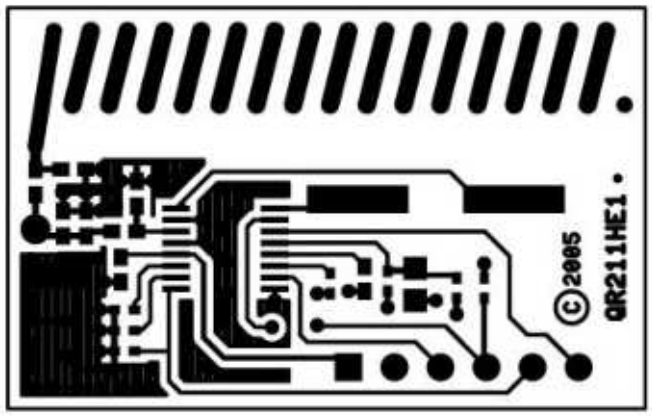

Figure 12. QR211HE1 Top Layer.

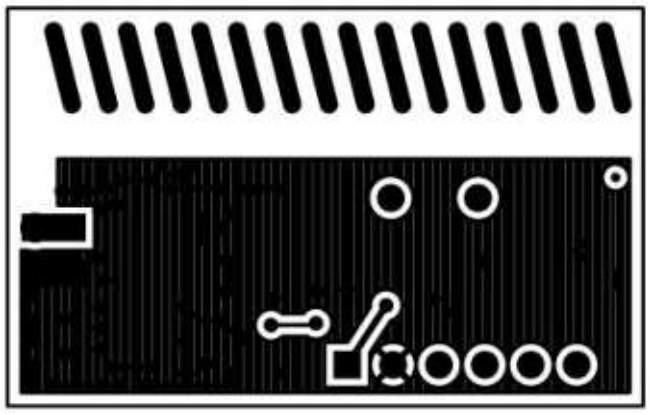

Figure 13. QR211HE1 Bottom Layer, Mirror Image.

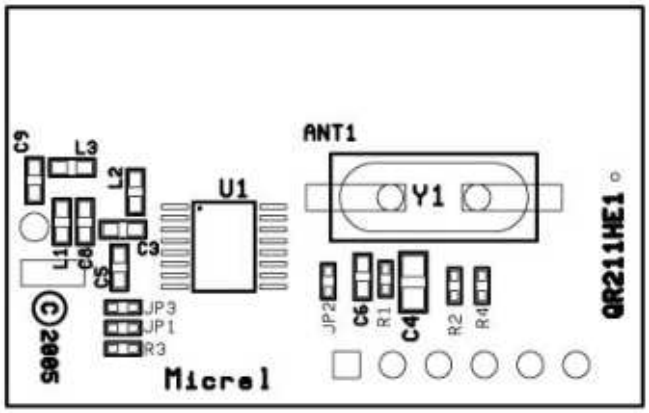

Figure 14. QR211HE1 Top Silkscreen Layer.

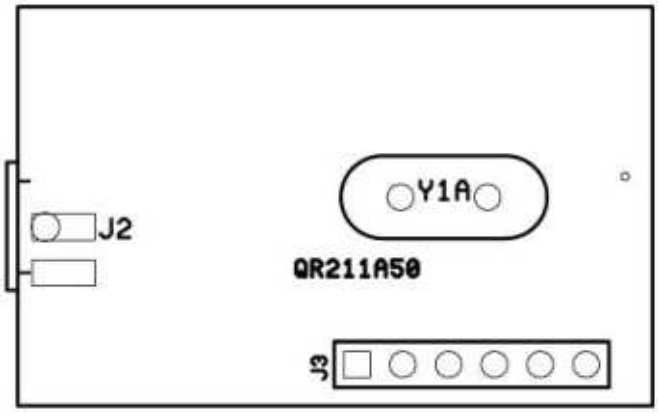

Figure 15. QR211HE1 Bottom Silkscreen Layer, Mirror Image.

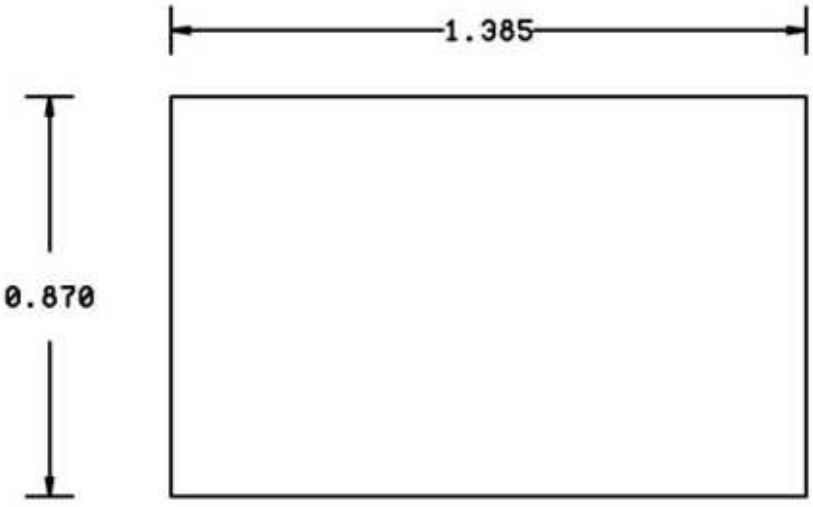

Figure 16: QR211HE1 Dimensions.

QR211HE1 Bill of Materials, 433.92 MHz

Item	Part Number	Manufacturer	Description	Qty.
ANT1			Helical PCB Antenna Pattern	1
ANT2			(np)50-ohm Ant 168mm 20 AWG, rigid wire	1
C3,C9		MuRata	1.5pF , 0402/0603	2
C4		Murata / Vishay	0.1µF, 0402/0603	1
C6,C5		Murata / Vishay	0.1µF, 0402/0603	2
C8		Murata	5.6pF, 0402/0603	1
JP1,JP2		Vishay	short, 0402, 0Ω resistor	2
JP3			open, 0402, not placed	1
J2			(np) not placed	1
J3			CON6	1
L1		Coilcraft / Murata / ACT1	24nH 5%, 0402/0603	1
L2		Coilcraft / Murata / ACT1	39nH 5%, 0402/0603	1
L3		Coilcraft / Murata / ACT1	30nH 2%, 0402/0603	1
R1,R2, R4			(np) 0402, not placed	3
R3		Vishay	100kΩ , 0402	1
Y1	HCM49	www.hib.com.br	(np)13.52127MHz Crystal	1
Y1A	HC49	www.hib.com.br	13.52127MHz Crystal	1
U1	**MICRF211AYQS**	**Micrel, Inc.**	**3V, QwikRadio® 433.92 MHz Receiver**	**1**

Table 10. QR211HE1 Bill of Materials, 433.92 MHz.

Package Information and Recommended Land Pattern(1)

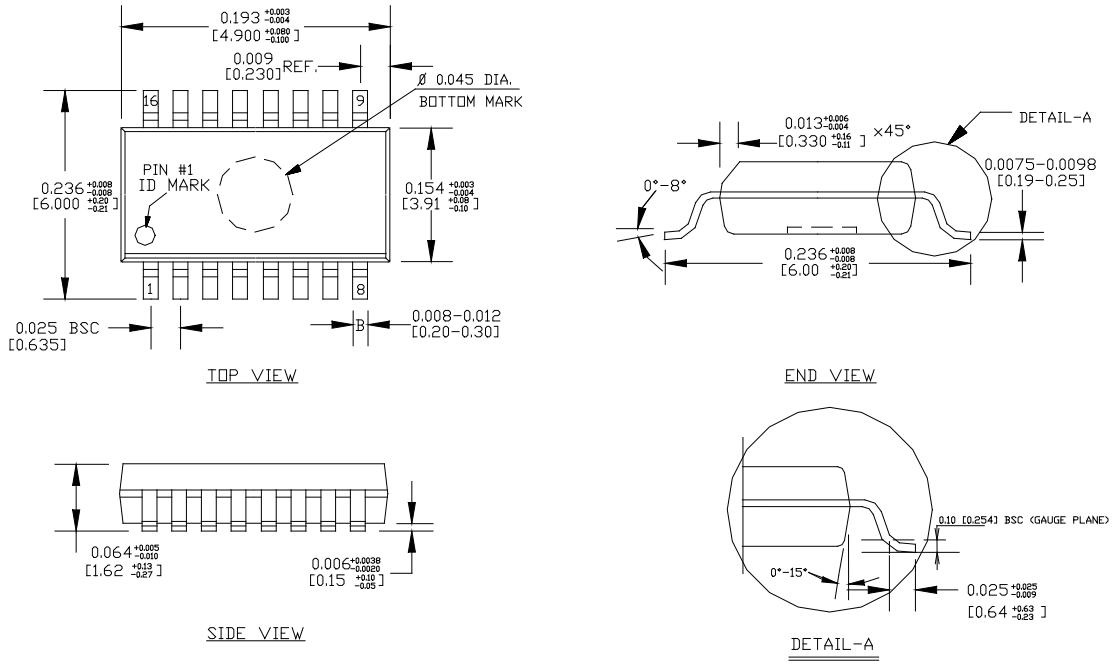

NOTE:
1. ALL DIMENSIONS ARE IN INCHES [MM].
2. LEAD COPLANARITY SHOULD BE 0.004" [0.10 mm] MAX.
3. MAX MISALIGNMENT BETWEEN TOP AND BOTTOM CENTER OF PACKAGE TO BE 0.004" [0.10 mm].
4. THE LEAD WIDTH, B TO BE DETERMINED AT .0075 [0.19 mm] FROM THE LEAD TIP.
5. BOTTOM MARK IS OPTIONAL, IT MAY NOT APPEAR ON THE ACTUAL UNITS.

QSOP16 Package Type (AQS16)

Note:

1. Package information is correct as of the publication date. For updates and most current information, go to www.micrel.com.

MICREL, INC. 2180 FORTUNE DRIVE SAN JOSE, CA 95131 USA
TEL +1 (408) 944-0800 FAX +1 (408) 474-1000 WEB http:/www.micrel.com

Micrel, Inc. is a leading global manufacturer of IC solutions for the worldwide high performance linear and power, LAN, and timing & communications markets. The Company's products include advanced mixed-signal, analog & power semiconductors; high-performance communication, clock management, MEMs-based clock oscillators & crystal-less clock generators, Ethernet switches, and physical layer transceiver ICs. Company customers include leading manufacturers of enterprise, consumer, industrial, mobile, telecommunications, automotive, and computer products. Corporation headquarters and state-of-the-art wafer fabrication facilities are located in San Jose, CA, with regional sales and support offices and advanced technology design centers situated throughout the Americas, Europe, and Asia. Additionally, the Company maintains an extensive network of distributors and reps worldwide.

Micrel makes no representations or warranties with respect to the accuracy or completeness of the information furnished in this datasheet. This information is not intended as a warranty and Micrel does not assume responsibility for its use. Micrel reserves the right to change circuitry, specifications and descriptions at any time without notice. No license, whether express, implied, arising by estoppel or otherwise, to any intellectual property rights is granted by this document. Except as provided in Micrel's terms and conditions of sale for such products, Micrel assumes no liability whatsoever, and Micrel disclaims any express or implied warranty relating to the sale and/or use of Micrel products including liability or warranties relating to fitness for a particular purpose, merchantability, or infringement of any patent, copyright, or other intellectual property right.

Micrel Products are not designed or authorized for use as components in life support appliances, devices or systems where malfunction of a product can reasonably be expected to result in personal injury. Life support devices or systems are devices or systems that (a) are intended for surgical implant into the body or (b) support or sustain life, and whose failure to perform can be reasonably expected to result in a significant injury to the user. A Purchaser's use or sale of Micrel Products for use in life support appliances, devices or systems is a Purchaser's own risk and Purchaser agrees to fully indemnify Micrel for any damages resulting from such use or sale.

© 2007 Micrel, Incorporated.