MSP430FR597x(1),MSP430FR592x(1) MSP430FR587x(1) Mixed-Signal Microcontrollers

1 Device Overview

1.1 Features

- Embedded Microcontroller
  - 16-Bit RISC Architecture up to 16-MHz Clock
  - Wide Supply Voltage Range From 3.6 V Down to 1.8 V (Minimum Supply Voltage is Restricted by SVS Levels, See the SVS Specifications)
- Optimized Ultra-Low-Power Modes
  - Active Mode: Approximately 100 µA/MHz
  - Standby (LPM3 With VLO): 0.4 µA (Typical)
  - Real-Time Clock (RTC) (LPM3.5): 0.35 µA (Typical) (1)
  - Shutdown (LPM4.5): 0.04 µA (Typical)
- Ultra-Low-Power Ferroelectric RAM (FRAM)
  - Up to 64KB of Nonvolatile Memory
  - Ultra-Low-Power Writes
  - Fast Write at 125 ns per Word (64KB in 4 ms)
  - Unified Memory = Program, Data, and Storage in One Single Space
  - 10^{15} Write Cycle Endurance
  - Radiation Resistant and Nonmagnetic
- Intelligent Digital Peripherals
  - 32-Bit Hardware Multiplier (MPY)
  - Three-Channel Internal Direct Memory Access (DMA)
  - RTC With Calendar and Alarm Functions
  - Five 16-Bit Timers With up to Seven Capture/Compare Registers
  - 16-Bit and 32-Bit Cyclic Redundancy Checker (CRC16, CRC32)
- High-Performance Analog
  - Up to 8-Channel Analog Comparator
  - 12-Bit Analog-to-Digital Converter (ADC) With Internal Reference and Sample-and-Hold and up to 8 External Input Channels
- Code Security and Encryption
  - 128-Bit or 256-Bit AES Security Encryption and Decryption Coprocessor (MSP430FR59xx(1) Only)
  - True Random Number Seed for Random Number Generation Algorithm
  - Lockable Memory Segments for IP Encapsulation and Secure Storage
- Multifunction Input/Output Ports
  - All I/O Pins Support Capacitive Touch Capability Without Need for External Components
  - Accessible Bit-, Byte- and Word-Wise (in Pairs)
  - Edge-Selectable Wakeup From LPM on Ports P1 to P4
  - Programmable Pullup and Pulldown on All Ports
- Enhanced Serial Communication
  - eUSCI_A0 and eUSCI_A1 Support:
    - UART With Automatic Baud-Rate Detection
    - IrDA Encode and Decode
    - SPI at Rates up to 10 Mbps
  - eUSCI_B0 and eUSCI_B1 Support:
    - I^2C With Multiple-Slave Addressing
    - SPI at Rates up to 10 Mbps
- Flexible Clock System
  - Fixed-Frequency DCO With 10 Selectable Factory-Trimmed Frequencies
  - Low-Power Low-Frequency Internal Clock Source (VLO)
  - 32-kHz Crystals (LFXT)
  - High-Frequency Crystals (HFXT)
- Development Tools and Software
  - Free Professional Development Environments With EnergyTrace++™ Technology for Power Profiling and Debugging
  - Microcontroller Development Boards Available
- Family Members
  - Device Comparison Summarizes the Available Variants and Packages
- For Complete Module Descriptions, See the *MSP430FR58xx, MSP430FR59xx, and MSP430FR6xx Family User's Guide*

(1) The RTC is clocked by a 3.7-pF crystal.

An IMPORTANT NOTICE at the end of this data sheet addresses availability, warranty, changes, use in safety-critical applications, intellectual property matters and other important disclaimers. PRODUCTION DATA.

1.2 Applications

- Metering
- Energy Harvested Sensor Nodes
- Wearable Electronics
- Sensor Management
- Data Logging

1.3 Description

This ultra-low-power MSP430FRxx FRAM microcontroller family consists of several devices featuring embedded nonvolatile FRAM, a 16-bit CPU, and different sets of peripherals targeted for various applications. The architecture, FRAM, and peripherals, combined with seven low-power modes, are optimized to achieve extended battery life in portable and wireless sensing applications. FRAM is a new nonvolatile memory that combines the speed, flexibility, and endurance of SRAM with the stability and reliability of flash, all at lower total power consumption.

Device Information(1)

PART NUMBER	PACKAGE	BODY SIZE(2)
MSP430FR5972IPMR	LQFP (64)	10 mm × 10 mm
MSP430FR5972IRGC	VQFN (64)	9 mm × 9 mm
MSP430FR5922IG56	TSSOP (56)	6.1 mm × 14 mm

(1) For the most current part, package, and ordering information for all available devices, see the *Package Option Addendum* in Section 9, or see the TI website at www.ti.com.
(2) The sizes shown here are approximations. For the package dimensions with tolerances, see the *Mechanical Data* in Section 9.

Copyright © 2015–2018, Texas Instruments Incorporated

1.4 Functional Block Diagram

Figure 1-1 shows the functional block diagram.

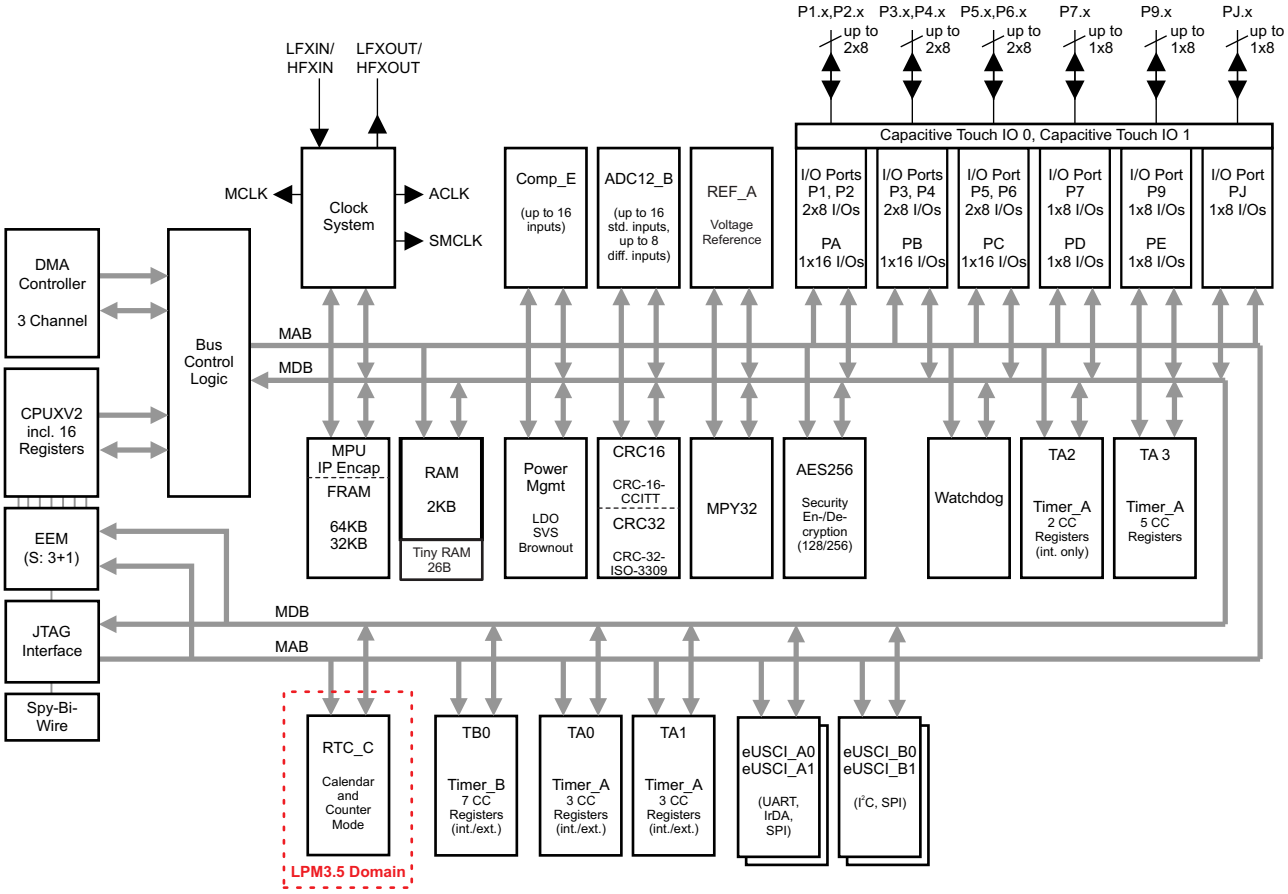

NOTE: AES256 is not implemented in the MSP430FR587x and MSP430FR587x1 devices.

NOTE: HFXIN and HFOUT are not implemented in the MSP430FR592x and MSP430FR592x1 devices.

Figure 1-1. Functional Block Diagram

Table of Contents

1 Device Overview **1**
1.1 Features 1
1.2 Applications 2
1.3 Description 2
1.4 Functional Block Diagram 3
2 Revision History **5**
3 Device Comparison **6**
3.1 Related Products 8
4 Terminal Configuration and Functions **9**
4.1 Pin Diagrams 9
4.2 Pin Attributes 12
4.3 Signal Descriptions 17
4.4 Pin Multiplexing 23
4.5 Buffer Type 23
4.6 Connection of Unused Pins 23
5 Specifications **24**
5.1 Absolute Maximum Ratings 24
5.2 ESD Ratings 24
5.3 Recommended Operating Conditions 24
5.4 Active Mode Supply Current Into V_{CC} Excluding External Current 25
5.5 Typical Characteristics - Active Mode Supply Currents 26
5.6 Low-Power Mode (LPM0, LPM1) Supply Currents Into V_{CC} Excluding External Current 26
5.7 Low-Power Mode LPM2, LPM3, LPM4 Supply Currents (Into V_{CC}) Excluding External Current 27
5.8 Low-Power Mode LPMx.5 Supply Currents (Into V_{CC}) Excluding External Current 29
5.9 Typical Characteristics, Low-Power Mode Supply Currents 30
5.10 Typical Characteristics, Current Consumption per Module 31
5.11 Thermal Resistance Characteristics 31
5.12 Timing and Switching Characteristics 32
6 Detailed Description **58**
6.1 Overview 58
6.2 CPU 58
6.3 Operating Modes 59
6.4 Interrupt Vector Table and Signatures 61
6.5 Bootloader (BSL) 64
6.6 JTAG Operation 64
6.7 FRAM 65
6.8 RAM 65
6.9 Tiny RAM 65
6.10 Memory Protection Unit (MPU) Including IP Encapsulation 65
6.11 Peripherals 66
6.12 Device Descriptors (TLV) 101
6.13 Memory 104
6.14 Identification 118
7 Applications, Implementation, and Layout **119**
7.1 Device Connection and Layout Fundamentals 119
7.2 Peripheral- and Interface-Specific Design Information 123
8 Device and Documentation Support **125**
8.1 Getting Started and Next Steps 125
8.2 Device Nomenclature 125
8.3 Tools and Software 126
8.4 Documentation Support 128
8.5 Related Links 129
8.6 Community Resources 129
8.7 Trademarks 130
8.8 Electrostatic Discharge Caution 130
8.9 Export Control Notice 130
8.10 Glossary 130
9 Mechanical, Packaging, and Orderable Information **131**

Copyright © 2015–2018, Texas Instruments Incorporated

2 Revision History

NOTE: Page numbers for previous revisions may differ from page numbers in the current version.

Changes from January 25, 2017 to August 30, 2018	Page
• Updated Section 3.1, *Related Products*	8
• Added note (1) to Table 5-2, *SVS*	32
• Changed capacitor value from 4.7 µF to 470 nF in Figure 7-5, *ADC12_B Grounding and Noise Considerations*	123
• Changed capacitor value from 4.7 µF to 470 nF in the last paragraph of Section 7.2.1.2, *Design Requirements*	124
• Updated text and figure in Section 8.2, *Device Nomenclature*	125

3 Device Comparison

Table 3-1 and Table 3-2 summarize the available family members.

Table 3-1. Device Comparison – Family Members With UART BSL

DEVICE	FRAM (KB)	SRAM (KB)	CLOCK SYSTEM	Timer_A (1)	Timer_B (2)	eUSCI		AES	ADC12_B	I/O	PACKAGE
						A (3)	B (4)				
MSP430FR5972	64	2	DCO **HFXT** **LFXT**	3, 3 (5) 2, 5 (6)(7)	7	2	2	yes	8 ext	51	64 PM 64 RGC
MSP430FR5872	64	2	DCO **HFXT** **LFXT**	3, 3 (5) 2, 5 (6)(7)	7	2	2	no	8 ext	51	64 PM 64 RGC
MSP430FR5970	32	2	DCO **HFXT** **LFXT**	3, 3 (5) 2, 5 (6)(7)	7	2	2	yes	8 ext	51	64 PM 64 RGC
MSP430FR5922	64	2	DCO **LFXT**	3, 3 (5) 2, 5 (6)(7)	7	2	2	yes	8 ext	51 46 (DGG)	64 PM 64 RGC 56 DGG
MSP430FR5870	32	2	DCO **HFXT** **LFXT**	3, 3 (5) 2, 5 (6)(7)	7	2	2	no	8 ext	51	64 PM 64 RGC

(1) Each number in the sequence represents an instantiation of Timer_A with its associated number of capture compare registers and PWM output generators available. For example, a number sequence of 3, 5 would represent two instantiations of Timer_A, the first instantiation having 3 and the second instantiation having 5 capture compare registers and PWM output generators, respectively.
(2) Each number in the sequence represents an instantiation of Timer_B with its associated number of capture compare registers and PWM output generators available. For example, a number sequence of 3, 5 would represent two instantiations of Timer_B, the first instantiation having 3 and the second instantiation having 5 capture compare registers and PWM output generators, respectively.
(3) eUSCI_A supports UART with automatic baud-rate detection, IrDA encode and decode, and SPI.
(4) eUSCI_B supports I^2C with multiple slave addresses and SPI.
(5) Timer_A TA0 and TA1 provide internal and external capture/compare inputs and internal and external PWM outputs.
(6) Timer_A TA2 provides only internal capture/compare inputs and only internal PWM outputs (if any).
(7) Timer_A TA3 provides only internal capture/compare inputs and only internal PWM outputs (if any) for FR592x(1) with RGC and PM packages. For FR592x(1) with DGG package and all other devices, Timer_A TA3 provides internal, external capture/compare inputs and internal, external PWM outputs (if any).

Copyright © 2015–2018, Texas Instruments Incorporated

Table 3-2. Device Comparison – Family Members With I²C BSL

DEVICE	FRAM (KB)	SRAM (KB)	CLOCK SYSTEM	Timer_A (1)	Timer_B (2)	eUSCI		AES	ADC12_B	I/O	PACKAGE
						A (3)	B (4)				
MSP430FR59721	64	2	DCO **HFXT** **LFXT**	3, 3 (5) 2, 5 (6)(7)	7	2	2	yes	8 ext	51	64 PM 64 RGC
MSP430FR59221	64	2	DCO **LFXT**	3, 3 (5) 2, 5 (6)(7)	7	2	2	yes	8 ext	51 46 (DGG)	64 PM 64 RGC 56 DGG
MSP430FR58721	64	2	DCO **HFXT** **LFXT**	3, 3 (5) 2, 5 (6)(7)	7	2	2	no	8 ext	51	64 PM 64 RGC

(1) Each number in the sequence represents an instantiation of Timer_A with its associated number of capture compare registers and PWM output generators available. For example, a number sequence of 3, 5 would represent two instantiations of Timer_A, the first instantiation having 3 and the second instantiation having 5 capture compare registers and PWM output generators, respectively.
(2) Each number in the sequence represents an instantiation of Timer_B with its associated number of capture compare registers and PWM output generators available. For example, a number sequence of 3, 5 would represent two instantiations of Timer_B, the first instantiation having 3 and the second instantiation having 5 capture compare registers and PWM output generators, respectively.
(3) eUSCI_A supports UART with automatic baud-rate detection, IrDA encode and decode, and SPI.
(4) eUSCI_B supports I²C with multiple slave addresses and SPI.
(5) Timer_A TA0 and TA1 provide internal and external capture/compare inputs and internal and external PWM outputs.
(6) Timer_A TA2 provides only internal capture/compare inputs and only internal PWM outputs (if any).
(7) Timer_A TA3 provides only internal capture/compare inputs and only internal PWM outputs (if any) for FR592x(1) with RGC and PM packages. For FR592x(1) with DGG package and all other devices, Timer_A TA3 provides internal, external capture/compare inputs and internal, external PWM outputs (if any).

Copyright © 2015–2018, Texas Instruments Incorporated

3.1 Related Products

For information about other devices in this family of products or related products, see the following links.

TI 16-bit and 32-bit microcontrollers High-performance, low-power solutions to enable the autonomous future

Products for MSP430 ultra-low-power sensing and measurement microcontrollers One platform. One ecosystem. Endless possibilities.

Products for MSP430 ultrasonic and performance sensing microcontrollers Ultra-low-power single-chip MCUs with integrated sensing peripherals

Companion Products for MSP430FR5972 Review products that are frequently purchased or used with this product.

Reference Designs for MSP430FR5972 The TI Designs Reference Design Library is a robust reference design library that spans analog, embedded processor, and connectivity. Created by TI experts to help you jump start your system design, all TI Designs include schematic or block diagrams, BOMs, and design files to speed your time to market. Search and download designs at ti.com/tidesigns.

Copyright © 2015–2018, Texas Instruments Incorporated

4 Terminal Configuration and Functions

4.1 Pin Diagrams

Figure 4-1 shows the pinout for the 64-pin PM and RGC packages of the MSP430FR597x(1) and MSP430FR587x(1) MCUs.

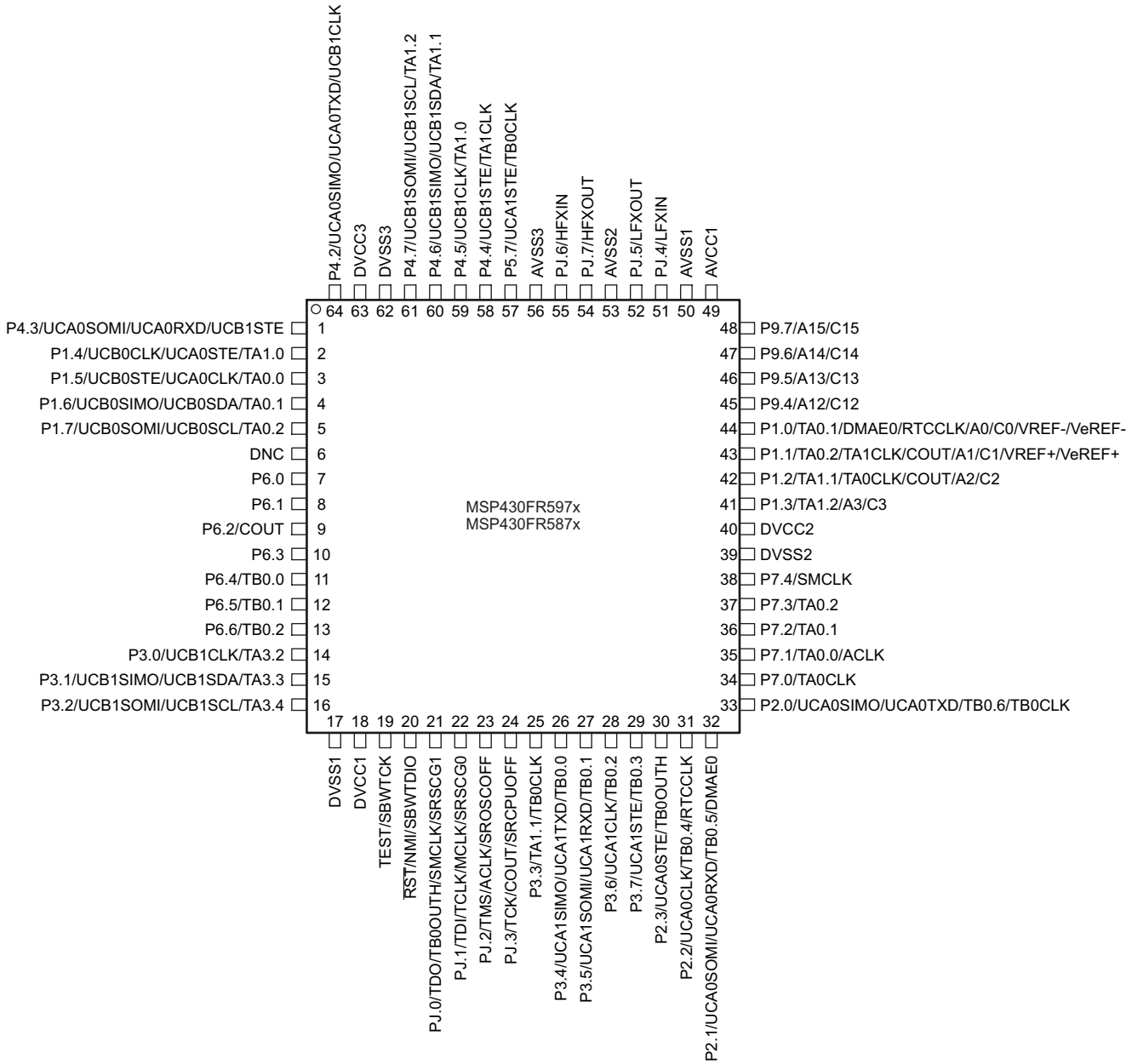

On devices with UART BSL: P2.0: BSL_TX; P2.1: BSL_RX
On devices with I^2C BSL: P1.6: BSL_DAT; P1.7: BSL_CLK

NOTE: TI recommends connecting the RGC package thermal pad to VSS.

Figure 4-1. 64-Pin PM and RGC Packages (Top View) – MSP430FR597x(1), MSP430FR587x(1)

Figure 4-2 shows the pinout for the 64-pin PM and RGC packages of the MSP430FR592x(1) MCUs.

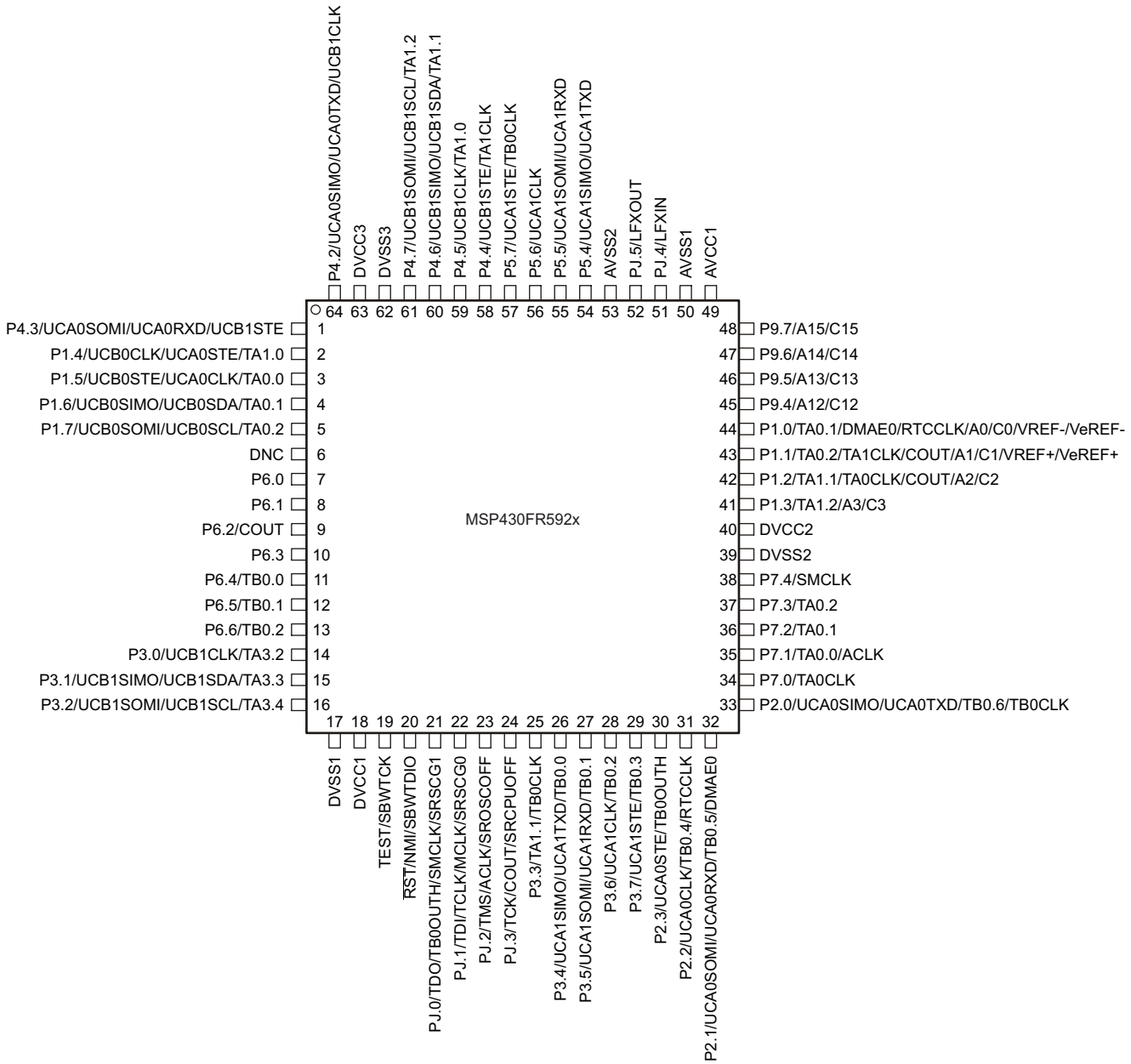

A. On devices with UART BSL: P2.0: BSL_TX; P2.1: BSL_RX
On devices with I^2C BSL: P1.6: BSL_DAT; P1.7: BSL_CLK

NOTE: TI recommends connecting the RGC package thermal pad to VSS.

Figure 4-2. 64-Pin PM and RGC Packages (Top View) – MSP430FR592x(1)

Copyright © 2015–2018, Texas Instruments Incorporated

Figure 4-3 shows the pinout for the 56-pin DGG package of the MSP430FR592x(1) MCUs.

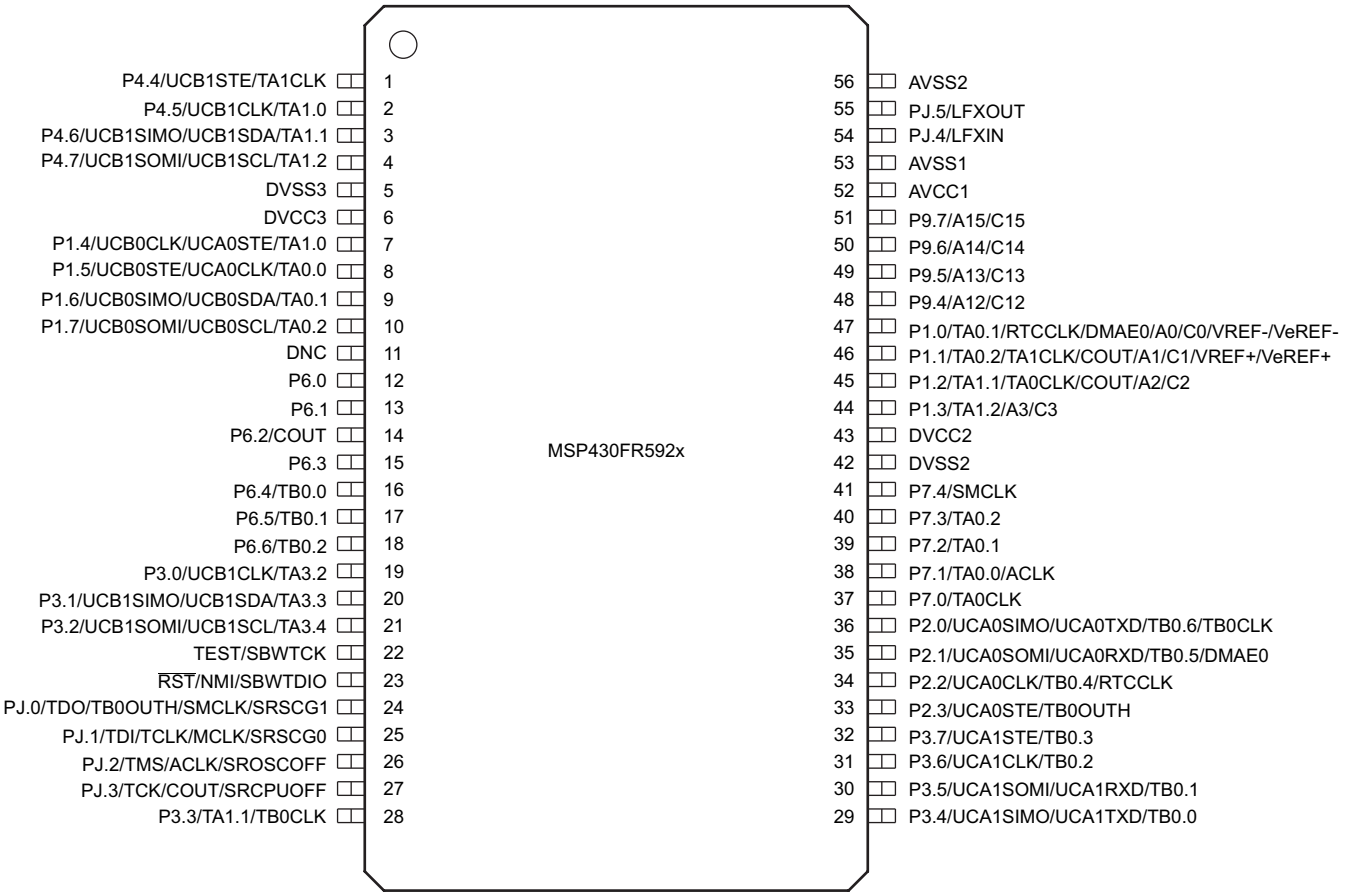

A. On devices with UART BSL: P2.0: BSL_TX; P2.1: BSL_RX
On devices with I^2C BSL: P1.6: BSL_DAT; P1.7: BSL_CLK

Figure 4-3. 56-Pin DGG Package (Top View) – MSP430FR592x(1)

4.2 Pin Attributes

Table 4-1 lists the attributes of each pin.

Table 4-1. Pin Attributes

FR597x(1), FR587x(1)	FR592x(1)		SIGNAL NAME(1) (2)	SIGNAL TYPE(3)	BUFFER TYPE(4)	POWER SOURCE	RESET STATE AFTER BOR(5)
PM, RGC	PM, RGC	DGG					
PIN NO.	PIN NO.	PIN NO.					
1	1		P4.3 (RD)	I/O	LVCMOS	DVCC	OFF
			UCA0SOMI	I/O	LVCMOS	DVCC	–
			UCA0RXD	I	LVCMOS	DVCC	–
			UCB1STE	I/O	LVCMOS	DVCC	–
2	2	7	P1.4 (RD)	I/O	LVCMOS	DVCC	OFF
			UCB0CLK	I/O	LVCMOS	DVCC	–
			UCA0STE	I/O	LVCMOS	DVCC	–
			TA1.0	I/O	LVCMOS	DVCC	–
3	3	8	P1.5 (RD)	I/O	LVCMOS	DVCC	OFF
			UCB0STE	I/O	LVCMOS	DVCC	–
			UCA0CLK	I/O	LVCMOS	DVCC	–
			TA0.0	I/O	LVCMOS	DVCC	–
4	4	9	P1.6 (RD)	I/O	LVCMOS	DVCC	OFF
			UCB0SIMO	I/O	LVCMOS	DVCC	–
			UCB0SDA	I/O	LVCMOS	DVCC	–
			BSL_DAT	I	LVCMOS	DVCC	–
			TA0.1	I/O	LVCMOS	DVCC	–
5	5	10	P1.7 (RD)	I/O	LVCMOS	DVCC	OFF
			UCB0SOMI	I/O	LVCMOS	DVCC	–
			UCB0SCL	I/O	LVCMOS	DVCC	–
			BSL_CLK	I	LVCMOS	DVCC	–
			TA0.2	I/O	LVCMOS	DVCC	–
6	6	11	DNC(6)	–	–	–	–
7	7	12	P6.0 (RD)	I/O	LVCMOS	DVCC	OFF
8	8	13	P6.1 (RD)	I/O	LVCMOS	DVCC	OFF
9	9	14	P6.2 (RD)	I/O	LVCMOS	DVCC	OFF
			COUT	O	LVCMOS	DVCC	–
10	10	15	P6.3 (RD)	I/O	LVCMOS	DVCC	OFF
11	11	16	P6.4 (RD)	I/O	LVCMOS	DVCC	OFF
			TB0.0	I/O	LVCMOS	DVCC	–
12	12	17	P6.5 (RD)	I/O	LVCMOS	DVCC	OFF
			TB0.1	I/O	LVCMOS	DVCC	–
13	13	18	P6.6 (RD)	I/O	LVCMOS	DVCC	OFF
			TB0.2	I/O	LVCMOS	DVCC	–

(1) Signals names with (RD) denote the reset default pin name.
(2) To determine the pin mux encodings for each pin, see the Port I/O Diagrams section.
(3) Signal Types: I = Input, O = Output, I/O = Input or Output.
(4) Buffer Types: LVCMOS, Analog, or Power (see Table 4-3 for details)
(5) Reset States:
OFF = High impedance with Schmitt-trigger inputs and pullup or pulldown (if available) disabled
N/A = Not applicable
(6) DNC = Do not connect

Copyright © 2015–2018, Texas Instruments Incorporated

Table 4-1. Pin Attributes (continued)

FR597x(1), FR587x(1)	FR592x(1)		SIGNAL NAME(1) (2)	SIGNAL TYPE(3)	BUFFER TYPE(4)	POWER SOURCE	RESET STATE AFTER BOR(5)
PM, RGC	PM, RGC	DGG					
PIN NO.	PIN NO.	PIN NO.					
14	14	19	P3.0 (RD)	I/O	LVCMOS	DVCC	OFF
			UCB1CLK	I/O	LVCMOS	DVCC	–
			TA3.2	I/O	LVCMOS	DVCC	–
15	15	20	P3.1 (RD)	I/O	LVCMOS	DVCC	OFF
			UCB1SIMO	I/O	LVCMOS	DVCC	–
			UCB1SDA	I/O	LVCMOS	DVCC	–
			TA3.3	I/O	LVCMOS	DVCC	–
16	16	21	P3.2 (RD)	I/O	LVCMOS	DVCC	OFF
			UCB1SOMI	I/O	LVCMOS	DVCC	–
			UCB1SCL	I/O	LVCMOS	DVCC	–
			TA3.4	I/O	LVCMOS	DVCC	–
17	17		DVSS1	P	Power	–	N/A
18	18		DVCC1	P	Power	–	N/A
19	19	22	TEST	I	LVCMOS	DVCC	OFF
			SBWTCK	I	LVCMOS	DVCC	–
20	20	23	$\overline{\text{RST}}$	I	LVCMOS	DVCC	OFF
			NMI	I	LVCMOS	DVCC	–
			SBWTDIO	I/O	LVCMOS	DVCC	–
21	21	24	PJ.0 (RD)	I/O	LVCMOS	DVCC	OFF
			TDO	O	LVCMOS	DVCC	–
			TB0OUTH	I	LVCMOS	DVCC	–
			SMCLK	O	LVCMOS	DVCC	–
			SRSCG1	O	LVCMOS	DVCC	–
22	22	25	PJ.1 (RD)	I/O	LVCMOS	DVCC	OFF
			TDI	I	LVCMOS	DVCC	–
			TCLK	I	LVCMOS	DVCC	–
			MCLK	O	LVCMOS	DVCC	–
			SRSCG0	O	LVCMOS	DVCC	–
23	23	26	PJ.2 (RD)	I/O	LVCMOS	DVCC	OFF
			TMS	I	LVCMOS	DVCC	–
			ACLK	O	LVCMOS	DVCC	–
			SROSCOFF	O	LVCMOS	DVCC	–
24	24	27	PJ.3 (RD)	I/O	LVCMOS	DVCC	OFF
			TCK	I	LVCMOS	DVCC	–
			COUT	O	LVCMOS	DVCC	–
			SRCPUOFF	O	LVCMOS	DVCC	–
25	25	28	P3.3 (RD)	I/O	LVCMOS	DVCC	OFF
			TA1.1	I/O	LVCMOS	DVCC	–
			TB0CLK	I	LVCMOS	DVCC	–
26	26	29	P3.4 (RD)	I/O	LVCMOS	DVCC	OFF
			UCA1SIMO	I/O	LVCMOS	DVCC	–
			UCA1TXD	O	LVCMOS	DVCC	–
			TB0.0	I/O	LVCMOS	DVCC	–

Table 4-1. Pin Attributes (continued)

FR597x(1), FR587x(1)	FR592x(1)		SIGNAL NAME(1) (2)	SIGNAL TYPE(3)	BUFFER TYPE(4)	POWER SOURCE	RESET STATE AFTER BOR(5)
PM, RGC	PM, RGC	DGG					
PIN NO.	PIN NO.	PIN NO.					
27	27	30	P3.5 (RD)	I/O	LVCMOS	DVCC	OFF
			UCA1SOMI	I/O	LVCMOS	DVCC	–
			UCA1RXD	I	LVCMOS	DVCC	–
			TB0.1	I/O	LVCMOS	DVCC	–
28	28	31	P3.6 (RD)	I/O	LVCMOS	DVCC	OFF
			UCA1CLK	I/O	LVCMOS	DVCC	–
			TB0.2	I/O	LVCMOS	DVCC	–
29	29	32	P3.7 (RD)	I/O	LVCMOS	DVCC	OFF
			UCA1STE	I/O	LVCMOS	DVCC	–
			TB0.3	I/O	LVCMOS	DVCC	–
30	30	33	P2.3 (RD)	I/O	LVCMOS	DVCC	OFF
			UCA0STE	I/O	LVCMOS	DVCC	–
			TB0OUTH	I	LVCMOS	DVCC	–
31	31	34	P2.2 (RD)	I/O	LVCMOS	DVCC	OFF
			UCA0CLK	I/O	LVCMOS	DVCC	–
			TB0.4	I/O	LVCMOS	DVCC	–
			RTCCLK	O	LVCMOS	DVCC	–
32	32	35	P2.1 (RD)	I/O	LVCMOS	DVCC	OFF
			UCA0SOMI	I/O	LVCMOS	DVCC	–
			UCA0RXD	I	LVCMOS	DVCC	–
			BSL_RX	I	LVCMOS	DVCC	–
			TB0.5	I/O	LVCMOS	DVCC	–
			DMAE0	I	LVCMOS	DVCC	–
33	33	36	P2.0 (RD)	I/O	LVCMOS	DVCC	OFF
			UCA0SIMO	I/O	LVCMOS	DVCC	–
			UCA0TXD	O	LVCMOS	DVCC	–
			BSL_TX	O	LVCMOS	DVCC	–
			TB0.6	I/O	LVCMOS	DVCC	–
			TB0CLK	I	LVCMOS	DVCC	–
34	34	37	P7.0 (RD)	I/O	LVCMOS	DVCC	OFF
			TA0CLK	I	LVCMOS	DVCC	–
35	35	38	P7.1 (RD)	I/O	LVCMOS	DVCC	OFF
			TA0.0	I/O	LVCMOS	DVCC	–
			ACLK	O	LVCMOS	DVCC	–
36	36	39	P7.2 (RD)	I/O	LVCMOS	DVCC	OFF
			TA0.1	I/O	LVCMOS	DVCC	–
37	37	40	P7.3 (RD)	I/O	LVCMOS	DVCC	OFF
			TA0.2	I/O	LVCMOS	DVCC	–
38	38	41	P7.4 (RD)	I/O	LVCMOS	DVCC	OFF
			SMCLK	O	LVCMOS	DVCC	–
39	39	42	DVSS2	P	Power	–	N/A
40	40	43	DVCC2	P	Power	–	N/A

Copyright © 2015–2018, Texas Instruments Incorporated

Table 4-1. Pin Attributes (continued)

FR597x(1), FR587x(1)	FR592x(1)		SIGNAL NAME(1) (2)	SIGNAL TYPE(3)	BUFFER TYPE(4)	POWER SOURCE	RESET STATE AFTER BOR(5)
PM, RGC	PM, RGC	DGG					
PIN NO.	PIN NO.	PIN NO.					
41	41	44	P1.3 (RD)	I/O	LVCMOS	DVCC	OFF
			TA1.2	I/O	LVCMOS	DVCC	–
			A3	I	Analog	AVCC	–
			C3	I	Analog	AVCC	–
42	42	45	P1.2 (RD)	I/O	LVCMOS	DVCC	OFF
			TA1.1	I/O	LVCMOS	DVCC	–
			TA0CLK	I	LVCMOS	DVCC	–
			COUT	O	LVCMOS	DVCC	–
			A2	I	Analog	AVCC	–
			C2	I	Analog	AVCC	–
43	43	46	P1.1 (RD)	I/O	LVCMOS	DVCC	OFF
			TA0.2	I/O	LVCMOS	DVCC	–
			TA1CLK	I	LVCMOS	DVCC	–
			COUT	O	LVCMOS	DVCC	–
			A1	I	Analog	AVCC	–
			C1	I	Analog	AVCC	–
			VREF+	O	Analog	AVCC	–
			VeREF+	I	Analog	–	–
44	44	47	P1.0 (RD)	I/O	LVCMOS	DVCC	OFF
			TA0.1	I/O	LVCMOS	DVCC	–
			DMAE0	I	LVCMOS	DVCC	–
			RTCCLK	O	LVCMOS	DVCC	–
			A0	I	Analog	AVCC	–
			C0	I	Analog	AVCC	–
			VREF-	O	Analog	AVCC	–
			VeREF-	I	Analog	–	–
45	45	48	P9.4 (RD)	I/O	LVCMOS	DVCC	OFF
			A12	I	Analog	AVCC	–
			C12	I	Analog	AVCC	–
46	46	49	P9.5 (RD)	I/O	LVCMOS	DVCC	OFF
			A13	I	Analog	AVCC	–
			C13	I	Analog	AVCC	–
47	47	50	P9.6 (RD)	I/O	LVCMOS	DVCC	OFF
			A14	I	Analog	AVCC	–
			C14	I	Analog	AVCC	–
48	48	51	P9.7 (RD)	I/O	LVCMOS	DVCC	OFF
			A15	I	Analog	AVCC	–
			C15	I	Analog	AVCC	–
49	49	52	AVCC1	P	Power	–	N/A
50	50	53	AVSS1	P	Power	–	N/A
51	51	54	PJ.4 (RD)	I/O	LVCMOS	DVCC	OFF
			LFXIN	I	Analog	AVCC	–
52	52	55	PJ.5 (RD)	I/O	LVCMOS	DVCC	OFF
			LFXOUT	O	Analog	AVCC	–
53	53	56	AVSS2	P	Power	–	N/A

Copyright © 2015–2018, Texas Instruments Incorporated

Table 4-1. Pin Attributes (continued)

FR597x(1), FR587x(1)	FR592x(1)		SIGNAL NAME(1) (2)	SIGNAL TYPE(3)	BUFFER TYPE(4)	POWER SOURCE	RESET STATE AFTER BOR(5)
PM, RGC	PM, RGC	DGG					
PIN NO.	PIN NO.	PIN NO.					
54			PJ.7 (RD)	I/O	LVCMOS	DVCC	OFF
			HFXOUT	O	Analog	AVCC	–
55			PJ.6 (RD)	I/O	LVCMOS	DVCC	OFF
			HFXIN	I	Analog	AVCC	–
56			AVSS3	P	Power	–	N/A
	54		P5.4 (RD)	I/O	LVCMOS	DVCC	OFF
			UCA1SIMO	I/O	LVCMOS	DVCC	–
			UCA1TXD	O	LVCMOS	DVCC	–
	55		P5.5 (RD)	I/O	LVCMOS	DVCC	OFF
			UCA1SOMI	I/O	LVCMOS	DVCC	–
			UCA1RXD	I	LVCMOS	DVCC	–
	56		P5.6 (RD)	I/O	LVCMOS	DVCC	OFF
			UCA1CLK	I/O	LVCMOS	DVCC	–
57	57		P5.7 (RD)	I/O	LVCMOS	DVCC	OFF
			UCA1STE	I/O	LVCMOS	DVCC	–
			TB0CLK	I	LVCMOS	DVCC	–
58	58	1	P4.4 (RD)	I/O	LVCMOS	DVCC	OFF
			UCB1STE	I/O	LVCMOS	DVCC	–
			TA1CLK	I	LVCMOS	DVCC	–
59	59	2	P4.5 (RD)	I/O	LVCMOS	DVCC	OFF
			UCB1CLK	I/O	LVCMOS	DVCC	–
			TA1.0	I/O	LVCMOS	DVCC	–
60	60	3	P4.6 (RD)	I/O	LVCMOS	DVCC	OFF
			UCB1SIMO	I/O	LVCMOS	DVCC	–
			UCB1SDA	I/O	LVCMOS	DVCC	–
			TA1.1	I/O	LVCMOS	DVCC	–
61	61	4	P4.7 (RD)	I/O	LVCMOS	DVCC	OFF
			UCB1SOMI	I/O	LVCMOS	DVCC	–
			UCB1SCL	I/O	LVCMOS	DVCC	–
			TA1.2	I/O	LVCMOS	DVCC	–
62	62	5	DVSS3	P	Power	–	N/A
63	63	6	DVCC3	P	Power	–	N/A
64	64		P4.2 (RD)	I/O	LVCMOS	DVCC	OFF
			UCA0SIMO	I/O	LVCMOS	DVCC	–
			UCA0TXD	O	LVCMOS	DVCC	–
			UCB1CLK	I/O	LVCMOS	DVCC	–

Copyright © 2015–2018, Texas Instruments Incorporated

4.3 Signal Descriptions

Table 4-2 describes the signals.

Table 4-2. Signal Descriptions

FUNCTION	SIGNAL NAME	FR597x(1), FR587x(1)	FR592x(1)		SIGNAL TYPE	DESCRIPTION
		PM, RGC	PM, RGC	DGG		
		PIN NO.	PIN NO.	PIN NO.		
ADC	A0	44	44	47	I	Analog input A0
	A1	43	43	46	I	Analog input A1
	A2	42	42	45	I	Analog input A2
	A3	41	41	44	I	Analog input A3
	A12	45	45	48	I	Analog input A12
	A13	46	46	49	I	Analog input A13
	A14	47	47	50	I	Analog input A14
	A15	48	48	51	I	Analog input A15
	VREF+	43	43	46	O	Output of positive reference voltage
	VREF-	44	44	47	O	Output of negative reference voltage
	VeREF+	43	43	46	I	Input for an external positive reference voltage to the ADC
	VeREF-	44	44	47	I	Input for an external negative reference voltage to the ADC
BSL (I^2C)	BSL_CLK	5	5	10	I	BSL Clock (I^2C BSL)
	BSL_DAT	4	4	9	I	BSL Data (I^2C BSL)
BSL (UART)	BSL_RX	32	32	35	I	BSL Receive (UART BSL)
	BSL_TX	33	33	36	O	BSL Transmit (UART BSL)
Clock	ACLK	23 35	23 35	26 38	O	ACLK output
	HFXIN	55			I	Input terminal of crystal oscillator XT2
	HFXOUT	54			O	Output terminal for crystal oscillator XT2
	LFXIN	51	51	54	I	Input terminal for crystal oscillator XT1
	LFXOUT	52	52	55	O	Output terminal of crystal oscillator XT1
	MCLK	22	22	25	O	MCLK output
	RTCCLK	31 44	31 44	34 47	O	RTC clock output for calibration
	SMCLK	21 38	21 38	24 41	O	SMCLK output
Comparator	C0	44	44	47	I	Comparator input C0
	C1	43	43	46	I	Comparator input C1
	C2	42	42	45	I	Comparator input C2
	C3	41	41	44	I	Comparator input C3
	C12	45	45	48	I	Comparator input C12
	C13	46	46	49	I	Comparator input C13
	C14	47	47	50	I	Comparator input C14
	C15	48	48	51	I	Comparator input C15
	COUT	9 24 42 43	9 24 42 43	14 27 45 46	O	Comparator output
DMA	DMAE0	32 44	32 44	32 44	I	DMA external trigger input

Table 4-2. Signal Descriptions (continued)

FUNCTION	SIGNAL NAME	FR597x(1), FR587x(1)	FR592x(1)		SIGNAL TYPE	DESCRIPTION
		PM, RGC	PM, RGC	DGG		
		PIN NO.	PIN NO.	PIN NO.		
DNC	DNC	6	6	22	–	Do Not Connect (DNC). TI strongly recommends leaving this pin not connected.
Debug	SBWTCK	19	19	23	I	Spy-Bi-Wire input clock
	SBWTDIO	20	20	27	I/O	Spy-Bi-Wire data input/output
	SRCPUOFF	24	24	26	O	Low-power debug: CPU status register CPUOFF
	SROSCOFF	23	23	25	O	Low-power debug: CPU status register OSCOFF
	SRSCG0	22	22	24	O	Low-power debug: CPU status register SCG0
	SRSCG1	21	21	27	O	Low-power debug: CPU status register SCG1
	TCK	24	24	25	I	Test clock
	TCLK	22	22	25	I	Test clock input
	TDI	22	22	24	I	Test data input
	TDO	21	21	22	O	Test data output port
	TEST	19	19	26	I	Test mode pin - select digital I/O on JTAG pins
	TMS	23	23	23	I	Test mode select

Copyright © 2015–2018, Texas Instruments Incorporated

Table 4-2. Signal Descriptions (continued)

FUNCTION	SIGNAL NAME	FR597x(1), FR587x(1)	FR592x(1)		SIGNAL TYPE	DESCRIPTION
		PM, RGC	PM, RGC	DGG		
		PIN NO.	PIN NO.	PIN NO.		
GPIO	P1.0	44	44	47	I/O	General-purpose digital I/O
	P1.1	43	43	46	I/O	General-purpose digital I/O
	P1.2	42	42	45	I/O	General-purpose digital I/O
	P1.3	41	41	44	I/O	General-purpose digital I/O
	P1.4	2	2	7	I/O	General-purpose digital I/O
	P1.5	3	3	8	I/O	General-purpose digital I/O
	P1.6	4	4	9	I/O	General-purpose digital I/O
	P1.7	5	5	10	I/O	General-purpose digital I/O
	P2.0	33	33	36	I/O	General-purpose digital I/O
	P2.1	32	32	35	I/O	General-purpose digital I/O
	P2.2	31	31	34	I/O	General-purpose digital I/O
	P2.3	30	30	33	I/O	General-purpose digital I/O
	P3.0	14	14	19	I/O	General-purpose digital I/O
	P3.1	15	15	20	I/O	General-purpose digital I/O
	P3.2	16	16	21	I/O	General-purpose digital I/O
	P3.3	25	25	28	I/O	General-purpose digital I/O
	P3.4	26	26	29	I/O	General-purpose digital I/O
	P3.5	27	27	30	I/O	General-purpose digital I/O
	P3.6	28	28	31	I/O	General-purpose digital I/O
	P3.7	29	29	32	I/O	General-purpose digital I/O
	P4.2	64	64		I/O	General-purpose digital I/O
	P4.3	1	1		I/O	General-purpose digital I/O
	P4.4	58	58	1	I/O	General-purpose digital I/O
	P4.5	59	59	2	I/O	General-purpose digital I/O
	P4.6	60	60	3	I/O	General-purpose digital I/O
	P4.7	61	61	4	I/O	General-purpose digital I/O
	P5.4		54		I/O	General-purpose digital I/O
	P5.5		55		I/O	General-purpose digital I/O
	P5.6		56		I/O	General-purpose digital I/O
	P5.7	57	57		I/O	General-purpose digital I/O

Table 4-2. Signal Descriptions (continued)

FUNCTION	SIGNAL NAME	FR597x(1), FR587x(1)	FR592x(1)		SIGNAL TYPE	DESCRIPTION
		PM, RGC	PM, RGC	DGG		
		PIN NO.	PIN NO.	PIN NO.		
GPIO	P6.0	7	7	12	I/O	General-purpose digital I/O
	P6.1	8	8	13	I/O	General-purpose digital I/O
	P6.2	9	9	14	I/O	General-purpose digital I/O
	P6.3	10	10	15	I/O	General-purpose digital I/O
	P6.4	11	11	16	I/O	General-purpose digital I/O
	P6.5	12	12	17	I/O	General-purpose digital I/O
	P6.6	13	13	18	I/O	General-purpose digital I/O
	P7.0	34	34	37	I/O	General-purpose digital I/O
	P7.1	35	35	38	I/O	General-purpose digital I/O
	P7.2	36	36	39	I/O	General-purpose digital I/O
	P7.3	37	37	40	I/O	General-purpose digital I/O
	P7.4	38	38	41	I/O	General-purpose digital I/O
	P9.4	45	45	48	I/O	General-purpose digital I/O
	P9.5	46	46	49	I/O	General-purpose digital I/O
	P9.6	47	47	50	I/O	General-purpose digital I/O
	P9.7	48	48	51	I/O	General-purpose digital I/O
	PJ.0	21	21	24	I/O	General-purpose digital I/O
	PJ.1	22	22	25	I/O	General-purpose digital I/O
	PJ.2	23	23	26	I/O	General-purpose digital I/O
	PJ.3	24	24	27	I/O	General-purpose digital I/O
	PJ.4	51	51	54	I/O	General-purpose digital I/O
	PJ.5	52	52	55	I/O	General-purpose digital I/O
	PJ.6	55	55		I/O	General-purpose digital I/O
	PJ.7	54	54		I/O	General-purpose digital I/O
I^2C	UCB0SCL	5	5	10	I/O	USCI_B0: I^2C clock (I^2C mode)
	UCB0SDA	4	4	9	I/O	USCI_B0: I^2C data (I^2C mode)
	UCB1SCL	16 61	16 61	21 4	I/O	USCI_B1: I^2C clock (I^2C mode)
	UCB1SDA	15 60	15 60	20 3	I/O	USCI_B1: I^2C data (I^2C mode)
Power	AVCC1	49	49	52	P	Analog power supply
	AVSS1	50	50	53	P	Analog ground supply
	AVSS2	53	53	56	P	Analog ground supply
	AVSS3	56			P	Analog ground supply
	DVCC1	18	18		P	Digital power supply
	DVCC2	40	40	43	P	Digital power supply
	DVCC3	63	63	6	P	Digital power supply
	DVSS1	17	17		P	Digital ground supply
	DVSS2	39	39	42	P	Digital ground supply
	DVSS3	62	62	5	P	Digital ground supply

Copyright © 2015–2018, Texas Instruments Incorporated

Table 4-2. Signal Descriptions (continued)

FUNCTION	SIGNAL NAME	FR597x(1), FR587x(1)	FR592x(1)		SIGNAL TYPE	DESCRIPTION
		PM, RGC	PM, RGC	DGG		
		PIN NO.	PIN NO.	PIN NO.		
SPI	UCA0CLK	3 31	3 31	8 34	I/O	USCI_A0: Clock signal input (SPI slave mode), Clock signal output (SPI master mode)
	UCA0SIMO	33 64	33 64	36	I/O	USCI_A0: Slave in, master out (SPI mode)
	UCA0SOMI	1 32	1 32	35	I/O	USCI_A0: Slave out, master in (SPI mode)
	UCA0STE	2 30	2 30	7 33	I/O	USCI_A0: Slave transmit enable (SPI mode)
	UCA1CLK	28	28 56	31	I/O	USCI_A1: Clock signal input (SPI slave mode), Clock signal output (SPI master mode)
	UCA1SIMO	26	26 54	29	I/O	USCI_A1: Slave in, master out (SPI mode)
	UCA1SOMI	27	27 55	30	I/O	USCI_A1: Slave out, master in (SPI mode)
	UCA1STE	29 57	29 57	32	I/O	USCI_A1: Slave transmit enable (SPI mode)
	UCB0CLK	2	2	7	I/O	USCI_B0: Clock signal input (SPI slave mode), Clock signal output (SPI master mode)
	UCB0SIMO	4	4	9	I/O	USCI_B0: Slave in, master out (SPI mode)
	UCB0SOMI	5	5	10	I/O	USCI_B0: Slave out, master in (SPI mode)
	UCB0STE	3	3	8	I/O	USCI_B0: Slave transmit enable (SPI mode)
	UCB1CLK	14 59 64	14 59 64	19 2	I/O	USCI_B1: Clock signal input (SPI slave mode), Clock signal output (SPI master mode)
	UCB1SIMO	15 60	15 60	3 20	I/O	USCI_B1: Slave in, master out (SPI mode)
	UCB1SOMI	16 61	16 61	21 4	I/O	USCI_B1: Slave out, master in (SPI mode)
	UCB1STE	1 58	1 58	1	I/O	USCI_B1: Slave transmit enable (SPI mode)
System	NMI	20	20	23	I	Nonmaskable interrupt input
	$\overline{\text{RST}}$	20	20	23	I	Reset input active low

Table 4-2. Signal Descriptions (continued)

FUNCTION	SIGNAL NAME	FR597x(1), FR587x(1)	FR592x(1)		SIGNAL TYPE	DESCRIPTION
		PM, RGC	PM, RGC	DGG		
		PIN NO.	PIN NO.	PIN NO.		
Timer_A	TA0.0	3 35	3 35	8 38	I/O	Timer_A TA0 CCR0 capture: CCI0A input, compare: Out0 output
	TA0.1	4 36 44	4 36 44	9 39 47	I/O	Timer_A TA0 CCR1 capture: CCI1A input, compare: Out1 output
	TA0.2	5 37 43	5 37 43	10 40 46	I/O	Timer_A TA0 CCR2 capture: CCI2A input, compare: Out2 output
	TA0CLK	34 42	34 42	37 45	I	Timer_A TA0 clock signal TA0CLK input
	TA1.0	2 59	2 59	7 2	I/O	Timer_A TA1 CCR0 capture: CCI0A input, compare: Out0 output
	TA1.1	25 42 60	25 42 60	28 45 3	I/O	Timer_A TA1 CCR1 capture: CCI1A input, compare: Out1 output
	TA1.2	41 61	41 61	44 4	I/O	Timer_A TA1 CCR2 capture: CCI2A input, compare: Out2 output
	TA1CLK	43 58	43 58	46 1	I	Timer_A TA1 clock signal TA1CLK input
	TA3.2	14	14	19	I/O	Timer_A TA3 CCR2 capture: CCI2B input, compare: Out2 output
	TA3.3	15	15	20	I/O	Timer_A TA3 CCR3 capture: CCI3B input, compare: Out3 output
	TA3.4	16	16	21	I/O	Timer_A TA3 CCR4 capture: CCI4B input, compare: Out4 output
Timer_B	TB0.0	11 26	11 26	16 29	I/O	Timer_B TB0 CCR0 capture: CCI0B input, compare: Out0 output
	TB0.1	12 27	12 27	17 30	I/O	Timer_B TB0 CCR1 capture: CCI1A input, compare: Out1 output
	TB0.2	13 28	13 28	18 31	I/O	Timer_B TB0 CCR2 capture: CCI2A input, compare: Out2 output
	TB0.3	29	29	32	I/O	Timer_B TB0 CCR3 capture: CCI3B input, compare: Out3 output
	TB0.4	31	31	34	I/O	Timer_B TB0 CCR4 capture: CCI4B input, compare: Out4 output
	TB0.5	32	32	35	I/O	Timer_B TB0 CCR5 capture: CCI5B input, compare: Out5 output
	TB0.6	33	33	36	I/O	Timer_B TB0 CCR6 capture: CCI6B input, compare: Out6 output
	TB0CLK	25 33 57	25 33 57	28 36	I	Timer_B TB0 clock signal TB0CLK input
	TB0OUTH	21 30	21 30	24 33	I	Switch all PWM outputs high impedance input - Timer_B TB0
UART	UCA0RXD	1 32	1 32	35	I	USCI_A0: Receive data (UART mode)
	UCA0TXD	33 64	33 64	36	O	USCI_A0: Transmit data (UART mode)
	UCA1RXD	27	27	30	I	USCI_A1: Receive data (UART mode)
	UCA1TXD	26	26	29	O	USCI_A1: Transmit data (UART mode)
Thermal Pad						RGC package only. VQFN package exposed thermal pad. TI recommends connection to V_{SS}.

Copyright © 2015–2018, Texas Instruments Incorporated

4.4 Pin Multiplexing

Pin multiplexing for these devices is controlled by both register settings and operating modes (for example, if the device is in test mode). For details of the settings for each pin and schematics of the multiplexed ports, see Section 6.11.22.

4.5 Buffer Type

Table 4-3 describes the buffer types that are referenced in Section 4.2.

Table 4-3. Buffer Type

BUFFER TYPE (STANDARD)	NOMINAL VOLTAGE	HYSTERESIS	PU OR PD	NOMINAL PU OR PD STRENGTH (µA)	OUTPUT DRIVE STRENGTH (mA)	OTHER CHARACTERISTICS
LVCMOS	3.0 V	Y (1)	Programmable	See Table 5-11	See Section 5.12.5.1	
Analog	3.0 V	N	N/A	N/A	N/A	See analog modules in Section 5 for details
Power (DVCC)	3.0 V	N	N/A	N/A	N/A	SVS enables hysteresis on DVCC
Power (AVCC)	3.0 V	N	N/A	N/A	N/A	

(1) Only for Input pins.

4.6 Connection of Unused Pins

Table 4-4 lists the correct termination of all unused pins.

Table 4-4. Connection of Unused Pins (1)

PIN	POTENTIAL	COMMENT
AVCC	DV_{CC}	
AVSS	DV_{SS}	
Px.0 to Px.7	Open	Switched to port function, output direction (PxDIR.n = 1)
$\overline{RST}$/NMI	DV_{CC} or V_{CC}	47-kΩ pullup or internal pullup selected with 10-nF (2.2 nF (2)) pulldown
PJ.0/TDO PJ.1/TDI PJ.2/TMS PJ.3/TCK	Open	The JTAG pins are shared with general-purpose I/O function (PJ.x). If these pins are not used, they should be set to port function and output direction. When used as JTAG pins, these pins should remain open.
TEST	Open	This pin always has an internal pulldown enabled.

(1) Any unused pin with a secondary function that is shared with general-purpose I/O should follow the Px.0 to Px.7 unused pin connection guidelines.
(2) The pulldown capacitor should not exceed 2.2 nF when using devices with Spy-Bi-Wire interface in Spy-Bi-Wire mode or in 4-wire JTAG mode with TI tools like FET interfaces or GANG programmers.

5 Specifications

5.1 Absolute Maximum Ratings[1]

over operating free-air temperature range (unless otherwise noted)

	MIN	MAX	UNIT
Voltage applied at DVCC and AVCC pins to V_{SS}	–0.3	4.1	V
Voltage difference between DVCC and AVCC pins[2]		±0.3	V
Voltage applied to any pin [3]	–0.3	V_{CC} + 0.3 (4.1 Maximum)	V
Diode current at any device pin		±2	mA
Storage temperature, T_{stg}[4]	–40	125	°C

(1) Stresses beyond those listed under *Absolute Maximum Ratings* may cause permanent damage to the device. These are stress ratings only, and functional operation of the device at these or any other conditions beyond those indicated under *Recommended Operating Conditions* is not implied. Exposure to absolute-maximum-rated conditions for extended periods may affect device reliability.
(2) Voltage differences between DVCC and AVCC exceeding the specified limits may cause malfunction of the device including erroneous writes to RAM and FRAM.
(3) All voltages referenced to V_{SS}.
(4) Higher temperature may be applied during board soldering according to the current JEDEC J-STD-020 specification with peak reflow temperatures not higher than classified on the device label on the shipping boxes or reels.

5.2 ESD Ratings

			VALUE	UNIT
$V_{(ESD)}$	Electrostatic discharge	Human-body model (HBM), per ANSI/ESDA/JEDEC JS-001[1]	±1000	V
		Charged-device model (CDM), per JEDEC specification JESD22-C101[2]	±250	

(1) JEDEC document JEP155 states that 500-V HBM allows safe manufacturing with a standard ESD control process. Pins listed as ±1000 V may actually have higher performance.
(2) JEDEC document JEP157 states that 250-V CDM allows safe manufacturing with a standard ESD control process. Pins listed as ±250 V may actually have higher performance.

5.3 Recommended Operating Conditions

Typical data are based on V_{CC} = 3.0 V, T_A = 25°C (unless otherwise noted)

			MIN	NOM	MAX	UNIT
V_{CC}	Supply voltage applied at all DVCC and AVCC pins[1] [2] [3]		1.8[4]		3.6	V
V_{SS}	Supply voltage applied at all DVSS and AVSS pins			0		V
T_A	Operating free-air temperature		–40		85	°C
T_J	Operating junction temperature		–40		85	°C
C_{DVCC}	Capacitor value at DVCC[5]		$1_{-20\%}$			µF
f_{SYSTEM}	Processor frequency (maximum MCLK frequency)[6]	No FRAM wait states (NWAITSx = 0)	0		8[7]	MHz
		With FRAM wait states (NWAITSx = 1)[8]	0		16[9]	
f_{ACLK}	Maximum ACLK frequency				50	kHz
f_{SMCLK}	Maximum SMCLK frequency				16[9]	MHz

(1) TI recommends powering AVCC and DVCC pins from the same source. At a minimum, during power up, power down, and device operation, the voltage difference between AVCC and DVCC must not exceed the limits specified in *Absolute Maximum Ratings*. Exceeding the specified limits may cause malfunction of the device including erroneous writes to RAM and FRAM.
(2) Fast supply voltage changes can trigger a BOR reset even within the recommended supply voltage range. To avoid unwanted BOR resets, the supply voltage must change by less than 0.05 V per microsecond (±0.05 V/µs). Following the data sheet recommendation for capacitor C_{DVCC} should limit the slopes accordingly.
(3) Modules may have a different supply voltage range specification. See the specification of the respective module in this data sheet.
(4) The minimum supply voltage is defined by the supervisor SVS levels. See the PMM SVS threshold parameters in Table 5-2 for the exact values.
(5) As decoupling capacitor for each supply pin pair (DVCC and DVSS, AVCC and AVSS), a low-ESR ceramic capacitor of 100 nF (minimum) should be placed as close as possible (within a few millimeters) to the respective pin pairs.
(6) Modules may have a different maximum input clock specification. See the specification of the respective module in this data sheet.
(7) DCO settings and HF cyrstals with a typical value less than or equal to the specified MAX value are permitted.
(8) Wait states only occur on actual FRAM accesses; that is, on FRAM cache misses. RAM and peripheral accesses are always excecuted without wait states.
(9) DCO settings and HF cyrstals with a typical value less than or equal to the specified MAX value are permitted. If a clock source with a higher typical value is used, the clock must be divided in the clock system.

Copyright © 2015–2018, Texas Instruments Incorporated

5.4 Active Mode Supply Current Into V_{CC} Excluding External Current

over recommended operating free-air temperature (unless otherwise noted)(1) (2)

PARAMETER	EXECUTION MEMORY	V_{CC}	FREQUENCY ($f_{MCLK} = f_{SMCLK}$)										UNIT
			1 MHz 0 WAIT STATES (NWAITSx = 0)		4 MHz 0 WAIT STATES (NWAITSx = 0)		8 MHz 0 WAIT STATES (NWAITSx = 0)		12 MHz 1 WAIT STATES (NWAITSx = 1)		16 MHz 1 WAIT STATES (NWAITSx = 1)		
			TYP	MAX	TYP	MAX	TYP	MAX	TYP	MAX	TYP	MAX	
$I_{AM, FRAM_UNI}$ (Unified memory)(3)	FRAM	3.0 V	210		640		1220		1475		1845		µA
$I_{AM, FRAM}$(0%)(4) (5)	FRAM 0% cache hit ratio	3.0 V	370		1280		2510		2080		2650		µA
$I_{AM, FRAM}$(50%)(4) (5)	FRAM 50% cache hit ratio	3.0 V	240		745		1440		1575		1990		µA
$I_{AM, FRAM}$(66%)(4) (5)	FRAM 66% cache hit ratio	3.0 V	200		560		1070		1300		1620		µA
$I_{AM, FRAM}$(75%)(4) (5)	FRAM 75% cache hit ratio	3.0 V	170	255	480		890	1085	1155	1310	1420	1620	µA
$I_{AM, FRAM}$(100%(4) (5)	FRAM 100% cache hit ratio	3.0 V	110		235		420		640		730		µA
$I_{AM, RAM}$ (6) (5)	RAM	3.0 V	130		320		585		890		1070		µA
$I_{AM, RAM\ only}$ (7) (5)	RAM	3.0 V	100	180	290		555		860		1040	1300	µA

(1) All inputs are tied to 0 V or to V_{CC}. Outputs do not source or sink any current.
(2) Characterized with program executing typical data processing.
f_{ACLK} = 32768 Hz, $f_{MCLK} = f_{SMCLK} = f_{DCO}$ at specified frequency, except for 12 MHz. For 12 MHz, f_{DCO}= 24 MHz and $f_{MCLK} = f_{SMCLK} = f_{DCO}/2$.
At MCLK frequencies above 8 MHz, the FRAM requires wait states. When wait states are required, the effective MCLK frequency ($f_{MCLK,eff}$) decreases. The effective MCLK frequency also depends on the cache hit ratio. SMCLK is not affected by the number of wait states or the cache hit ratio.
The following equation can be used to compute $f_{MCLK,eff}$:
$f_{MCLK,eff} = f_{MCLK}$ / [wait states × (1 - cache hit ratio) + 1]
For example, with 1 wait state and 75% cache hit ratio $f_{MCKL,eff} = f_{MCLK}$ / [1 × (1 - 0.75) + 1] = f_{MCLK} / 1.25.
(3) Represents typical program execution. Program and data reside entirely in FRAM. All execution is from FRAM.
(4) Program resides in FRAM. Data resides in SRAM. Average current dissipation varies with cache hit-to-miss ratio as specified. Cache hit ratio represents number cache accesess divided by the total number of FRAM accesses. For example, a 75% ratio implies three of every four accesses is from cache, and the remaining are FRAM accesses.
(5) See Figure 5-1 for typical curves. Each characteristic equation shown in the graph is computed using the least squares method for best linear fit using the typical data shown in Section 5.4.
(6) Program and data reside entirely in RAM. All execution is from RAM.
(7) Program and data reside entirely in RAM. All execution is from RAM. FRAM is off.

5.5 Typical Characteristics - Active Mode Supply Currents

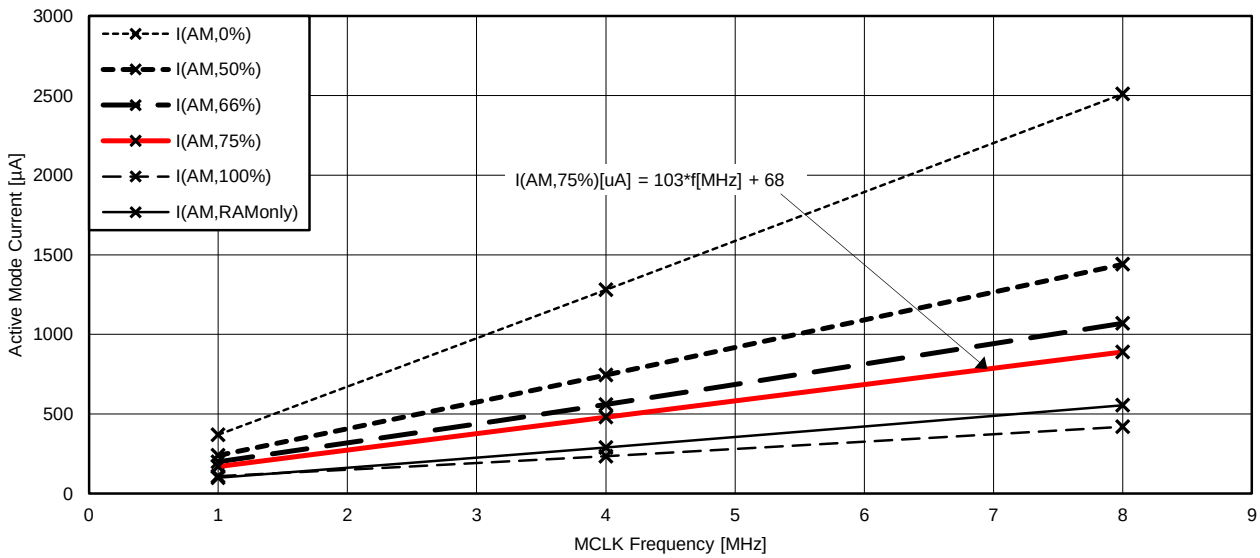

NOTE: I(AM, cache hit ratio): Program resides in FRAM. Data resides in SRAM. Average current dissipation varies with cache hit-to-miss ratio as specified. Cache hit ratio represents number cache accesses divided by the total number of FRAM accesses. For example, a 75% ratio implies three of every four accesses is from cache, and the remaining are FRAM accesses.

NOTE: $I_{(AM,\ RAMonly)}$: Program and data reside entirely in RAM. All execution is from RAM. FRAM is off.

Figure 5-1. Typical Active Mode Supply Currents, No Wait States

5.6 Low-Power Mode (LPM0, LPM1) Supply Currents Into V_{CC} Excluding External Current

over recommended operating free-air temperature (unless otherwise noted)(1) (2)

PARAMETER	V_{CC}	FREQUENCY (f_{SMCLK})										UNIT
		1 MHz		4 MHz		8 MHz		12 MHz		16 MHz		
		TYP	MAX	TYP	MAX	TYP	MAX	TYP	MAX	TYP	MAX	
I_{LPM0}	2.2 V	75		105		165		250		230		µA
	3.0 V	80	120	115		175		260		240	275	
I_{LPM1}	2.2 V	40		65		130		215		195		µA
	3.0 V	40	65	65		130		215		195	220	

(1) All inputs are tied to 0 V or to V_{CC}. Outputs do not source or sink any current.
(2) Current for watchdog timer clocked by SMCLK included.
f_{ACLK} = 32768 Hz, f_{MCLK} = 0 MHz, f_{SMCLK} = f_{DCO} at specified frequency - except for 12 MHz: here f_{DCO}=24MHz and f_{SMCLK} = f_{DCO}/2.

Copyright © 2015–2018, Texas Instruments Incorporated

5.7 Low-Power Mode LPM2, LPM3, LPM4 Supply Currents (Into V_{CC}) Excluding External Current

over recommended ranges of supply voltage and operating free-air temperature (unless otherwise noted) [1]

PARAMETER		V_{CC}	–40°C		25°C		60°C		85°C		UNIT
			TYP	MAX	TYP	MAX	TYP	MAX	TYP	MAX	
$I_{LPM2,XT12}$	Low-power mode 2, 12-pF crystal[2] [3] [4]	2.2 V	0.8		1.2		3.1		8.8		µA
		3.0 V	0.8		1.2	2.2	3.1		8.8	17	
$I_{LPM2,XT3.7}$	Low-power mode 2, 3.7-pF crystal[2] [5] [4]	2.2 V	0.7		1.1		3.0		8.7		µA
		3.0 V	0.7		1.1		3.0		8.7		
$I_{LPM2,VLO}$	Low-power mode 2, VLO, includes SVS[6]	2.2 V	0.5		0.9		2.8		8.5		µA
		3.0 V	0.5		0.9	2.0	2.8		8.5	16.7	
$I_{LPM3,XT12}$	Low-power mode 3, 12-pF crystal, includes SVS[2] [3] [7]	2.2 V	0.7		0.9		1.2		2.5		µA
		3.0 V	0.7		0.9	1.2	1.2		2.5	6.4	
$I_{LPM3,XT3.7}$	Low-power mode 3, 3.7-pF crystal, excludes SVS[2] [5] [8] (also see Figure 5-2)	2.2 V	0.6		0.7		1.1		2.4		µA
		3.0 V	0.6		0.7		1.1		2.4		
$I_{LPM3,VLO}$	Low-power mode 3, VLO, excludes SVS[9]	2.2 V	0.35		0.4		0.9		1.8		µA
		3.0 V	0.35		0.4	0.8	0.9		1.8	6.1	
$I_{LPM3,VLO,RAMoff}$	Low-power mode 3, VLO, excludes SVS, RAM powered down completely[10]	2.2 V	0.35		0.4		0.8		1.7		µA
		3.0 V	0.35		0.4	0.7	0.8		1.7	5.2	

(1) All inputs are tied to 0 V or to V_{CC}. Outputs do not source or sink any current.
(2) Not applicable for devices with HF crystal oscillator only.
(3) Characterized with a Micro Crystal MS1V-T1K crystal with a load capacitance of 12.5 pF. The internal and external load capacitance are chosen to closely match the required 12.5 pF load.
(4) Low-power mode 2, crystal oscillator test conditions:
Current for watchdog timer clocked by ACLK and RTC clocked by XT1 included. Current for brownout and SVS included.
CPUOFF = 1, SCG0 = 0 SCG1 = 1, OSCOFF = 0 (LPM2),
f_{XT1} = 32768 Hz, $f_{ACLK} = f_{XT1}$, $f_{MCLK} = f_{SMCLK}$ = 0 MHz
(5) Characterized with a Seiko SSP-T7-FL (SMD) crystal with a load capacitance of 3.7 pF. The internal and external load capacitance are chosen to closely match the required 3.7-pF load.
(6) Low-power mode 2, VLO test conditions:
Current for watchdog timer clocked by ACLK included. RTC disabled (RTCHOLD = 1). Current for brownout and SVS included.
CPUOFF = 1, SCG0 = 0 SCG1 = 1, OSCOFF = 0 (LPM2),
f_{XT1} = 0 Hz, $f_{ACLK} = f_{VLO}$, $f_{MCLK} = f_{SMCLK}$ = 0 MHz
(7) Low-power mode 3, 12-pF crystal, includes SVS test conditions:
Current for watchdog timer clocked by ACLK and RTC clocked by XT1 included. Current for brownout and SVS included (SVSHE = 1).
CPUOFF = 1, SCG0 = 1 SCG1 = 1, OSCOFF = 0 (LPM3),
f_{XT1} = 32768 Hz, $f_{ACLK} = f_{XT1}$, $f_{MCLK} = f_{SMCLK}$ = 0 MHz
Activating additional peripherals increases the current consumption due to active supply current contribution as well as due to additional idle current. See the idle currents specified for the respective peripheral groups.
(8) Low-power mode 3, 3.7-pF crystal, excludes SVS test conditions:
Current for watchdog timer clocked by ACLK and RTC clocked by XT1 included. Current for brownout included. SVS disabled (SVSHE = 0).
CPUOFF = 1, SCG0 = 1 SCG1 = 1, OSCOFF = 0 (LPM3),
f_{XT1} = 32768 Hz, $f_{ACLK} = f_{XT1}$, $f_{MCLK} = f_{SMCLK}$ = 0 MHz
Activating additional peripherals increases the current consumption due to active supply current contribution as well as due to additional idle current. See the idle currents specified for the respective peripheral groups.
(9) Low-power mode 3, VLO, excludes SVS test conditions:
Current for watchdog timer clocked by ACLK included. RTC disabled (RTCHOLD = 1). Current for brownout included. SVS disabled (SVSHE = 0).
CPUOFF = 1, SCG0 = 1 SCG1 = 1, OSCOFF = 0 (LPM3),
f_{XT1} = 0 Hz, $f_{ACLK} = f_{VLO}$, $f_{MCLK} = f_{SMCLK}$ = 0 MHz
Activating additional peripherals increases the current consumption due to active supply current contribution as well as due to additional idle current. See the idle currents specified for the respective peripheral groups.
(10) Low-power mode 3, VLO, excludes SVS, RAM powered down completely test conditions:
Current for watchdog timer clocked by ACLK included. RTC disabled (RTCHOLD = 1). Current for brownout included. SVS disabled (SVSHE = 0). RAM disabled (RCCTL0 = 5A55h).
CPUOFF = 1, SCG0 = 1 SCG1 = 1, OSCOFF = 0 (LPM3),
f_{XT1} = 0 Hz, $f_{ACLK} = f_{VLO}$, $f_{MCLK} = f_{SMCLK}$ = 0 MHz
Activating additional peripherals increases the current consumption due to active supply current contribution as well as due to additional idle current. See the idle currents specified for the respective peripheral groups.

Copyright © 2015–2018, Texas Instruments Incorporated

Low-Power Mode LPM2, LPM3, LPM4 Supply Currents (Into V_{CC}) Excluding External Current *(continued)*

over recommended ranges of supply voltage and operating free-air temperature (unless otherwise noted) [(1)]

PARAMETER		V_{CC}	–40°C		25°C		60°C		85°C		UNIT
			TYP	MAX	TYP	MAX	TYP	MAX	TYP	MAX	
$I_{LPM4,SVS}$	Low-power mode 4, includes SVS[(11)]	2.2 V	0.45		0.55		0.9		1.8		µA
		3.0 V	0.45		0.55	0.8	0.9		1.8	6.2	
I_{LPM4}	Low-power mode 4, excludes SVS[(12)]	2.2 V	0.25		0.4		0.7		1.6		µA
		3.0 V	0.25		0.4	0.65	0.7		1.6	4.6	
$I_{LPM4,RAMoff}$	Low-power mode 4, excludes SVS, RAM powered down completely[(13)]	2.2 V	0.25		0.4		0.7		1.4		µA
		3.0 V	0.25		0.4	0.65	0.7		1.4	4.6	
$I_{IDLE,GroupA}$	Additional idle current if one or more modules from Group A (see Section 6.3.2) are activated in LPM3 or LPM4	3.0 V			0.02				0.4	1.0	µA
$I_{IDLE,GroupB}$	Additional idle current if one or more modules from Group B (see Section 6.3.2) are activated in LPM3 or LPM4	3.0 V			0.02				0.4	1.0	µA
$I_{IDLE,GroupC}$	Additional idle current if one or more modules from Group C (see Section 6.3.2) are activated in LPM3 or LPM4	3.0 V			0.02				0.3	0.8	µA

(11) Low-power mode 4, includes SVS test conditions:
Current for brownout and SVS included (SVSHE = 1).
CPUOFF = 1, SCG0 = 1 SCG1 = 1, OSCOFF = 1 (LPM4),
f_{XT1} = 0 Hz, f_{ACLK} = 0 Hz, f_{MCLK} = f_{SMCLK} = 0 MHz
Activating additional peripherals increases the current consumption due to active supply current contribution as well as due to additional idle current. See the idle currents specified for the respective peripheral groups.

(12) Low-power mode 4, excludes SVS test conditions:
Current for brownout included. SVS disabled (SVSHE = 0).
CPUOFF = 1, SCG0 = 1 SCG1 = 1, OSCOFF = 1 (LPM4),
f_{XT1} = 0 Hz, f_{ACLK} = 0 Hz, f_{MCLK} = f_{SMCLK} = 0 MHz
Activating additional peripherals increases the current consumption due to active supply current contribution as well as due to additional idle current. See the idle currents specified for the respective peripheral groups.

(13) Low-power mode 4, excludes SVS, RAM powered down completely test conditions:
Current for brownout included. SVS disabled (SVSHE = 0). RAM disabled (RCCTL0 = 5A55h).
CPUOFF = 1, SCG0 = 1 SCG1 = 1, OSCOFF = 1 (LPM4),
f_{XT1} = 0 Hz, f_{ACLK} = 0 Hz, f_{MCLK} = f_{SMCLK} = 0 MHz
Activating additional peripherals increases the current consumption due to active supply current contribution as well as due to additional idle current. See the idle currents specified for the respective peripheral groups.

Copyright © 2015–2018, Texas Instruments Incorporated

5.8 Low-Power Mode LPMx.5 Supply Currents (Into V_{CC}) Excluding External Current

over recommended ranges of supply voltage and operating free-air temperature (unless otherwise noted)[1]

PARAMETER		V_{CC}	–40°C		25°C		60°C		85°C		UNIT
			TYP	MAX	TYP	MAX	TYP	MAX	TYP	MAX	
$I_{LPM3.5,XT12}$	Low-power mode 3.5, 12-pF crystal including SVS[2] [3] [4]	2.2 V	0.45		0.5		0.6		0.75		µA
		3.0 V	0.45		0.5	0.75	0.6		0.75	1.4	
$I_{LPM3.5,XT3.7}$	Low-power mode 3.5, 3.7-pF crystal excluding SVS[2] [5] [6]	2.2 V	0.3		0.35		0.4		0.65		µA
		3.0 V	0.3		0.35		0.4		0.65		
$I_{LPM4.5,SVS}$	Low-power mode 4.5, including SVS[7]	2.2 V	0.2		0.3		0.35		0.4		µA
		3.0 V	0.2		0.3	0.5	0.35		0.4	0.7	
$I_{LPM4.5}$	Low-power mode 4.5, excluding SVS[8]	2.2 V	0.03		0.04		0.06		0.14		µA
		3.0 V	0.03		0.04		0.06		0.14	0.5	

(1) All inputs are tied to 0 V or to V_{CC}. Outputs do not source or sink any current.
(2) Not applicable for devices with HF crystal oscillator only.
(3) Characterized with a Micro Crystal MS1V-T1K crystal with a load capacitance of 12.5 pF. The internal and external load capacitance are chosen to closely match the required 12.5 pF load.
(4) Low-power mode 3.5, 1-pF crystal including SVS test conditions:
Current for RTC clocked by XT1 included. Current for brownout and SVS included (SVSHE = 1). Core regulator disabled.
PMMREGOFF = 1, CPUOFF = 1, SCG0 = 1 SCG1 = 1, OSCOFF = 1 (LPMx.5),
f_{XT1} = 32768 Hz, $f_{ACLK} = f_{XT1}$, $f_{MCLK} = f_{SMCLK}$ = 0 MHz
(5) Characterized with a Seiko SSP-T7-FL (SMD) crystal with a load capacitance of 3.7 pF. The internal and external load capacitance are chosen to closely match the required 3.7-pF load.
(6) Low-power mode 3.5, 3.7-pF crystal excluding SVS test conditions:
Current for RTC clocked by XT1 included.Current for brownout included. SVS disabled (SVSHE = 0). Core regulator disabled.
PMMREGOFF = 1, CPUOFF = 1, SCG0 = 1 SCG1 = 1, OSCOFF = 1 (LPMx.5),
f_{XT1} = 32768 Hz, $f_{ACLK} = f_{XT1}$, $f_{MCLK} = f_{SMCLK}$ = 0 MHz
(7) Low-power mode 4.5 including SVS test conditions:
Current for brownout and SVS included (SVSHE = 1). Core regulator disabled.
PMMREGOFF = 1, CPUOFF = 1, SCG0 = 1 SCG1 = 1, OSCOFF = 1 (LPMx.5),
f_{XT1} = 0 Hz, f_{ACLK} = 0 Hz, $f_{MCLK} = f_{SMCLK}$ = 0 MHz
(8) Low-power mode 4.5 excluding SVS test conditions:
Current for brownout included. SVS disabled (SVSHE = 0). Core regulator disabled.
PMMREGOFF = 1, CPUOFF = 1, SCG0 = 1 SCG1 = 1, OSCOFF = 1 (LPMx.5),
f_{XT1} = 0 Hz, f_{ACLK} = 0 Hz, $f_{MCLK} = f_{SMCLK}$ = 0 MHz

Copyright © 2015–2018, Texas Instruments Incorporated

5.9 Typical Characteristics, Low-Power Mode Supply Currents

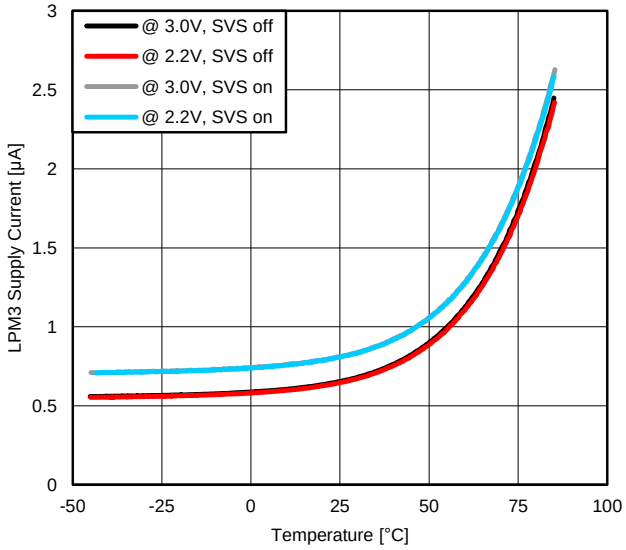

Figure 5-2. LPM3 Supply Current vs Temperature (LPM3,XT3.7)

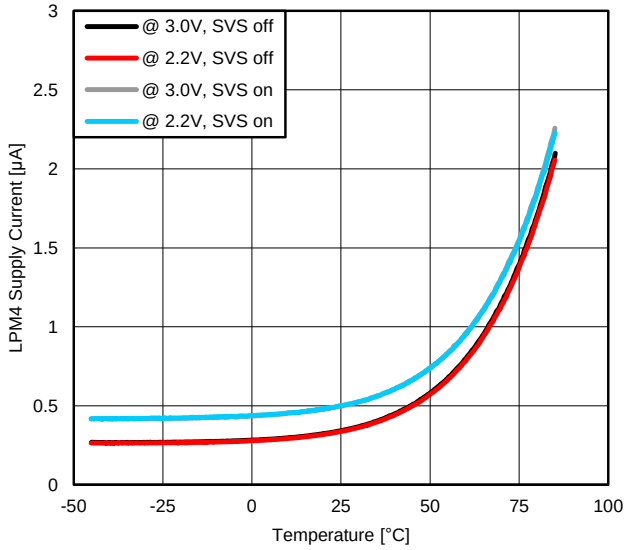

Figure 5-3. LPM4 Supply Current vs Temperature (LPM4,SVS)

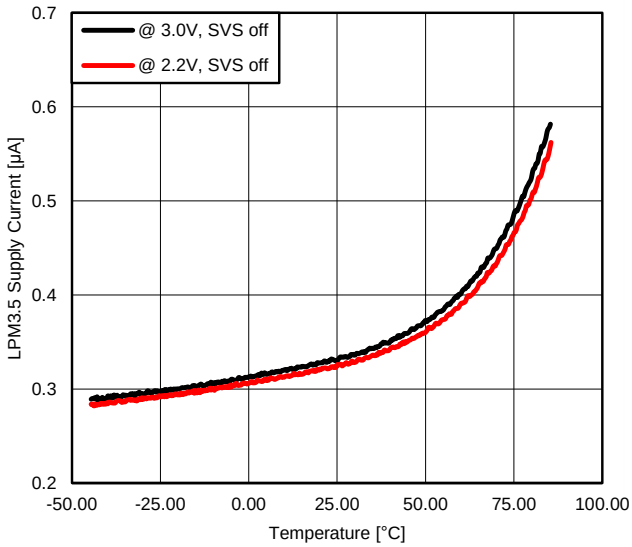

Figure 5-4. LPM3.5 Supply Current vs Temperature (LPM3.5,XT3.7)

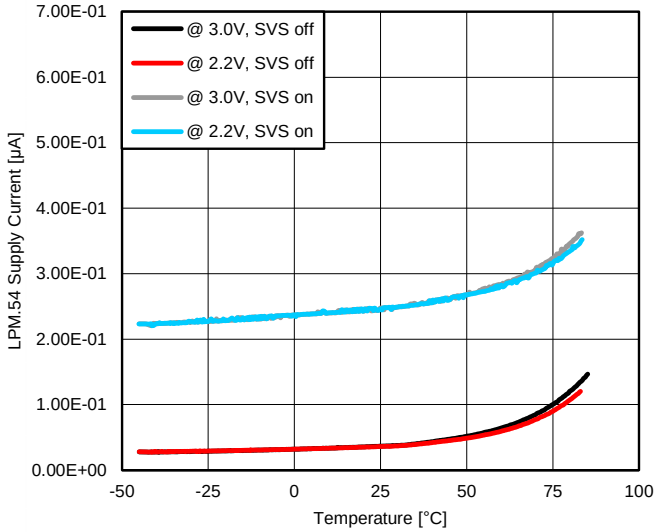

Figure 5-5. LPM4.5 Supply Current vs Temperature (LPM4.5)

Copyright © 2015–2018, Texas Instruments Incorporated

5.10 Typical Characteristics, Current Consumption per Module

MODULE	TEST CONDITIONS	REFERENCE CLOCK	MIN	TYP	MAX	UNIT
Timer_A		Module input clock		3		µA/MHz
Timer_B		Module input clock		5		µA/MHz
eUSCI_A	UART mode	Module input clock		5.5		µA/MHz
eUSCI_A	SPI mode	Module input clock		3.5		µA/MHz
eUSCI_B	SPI mode	Module input clock		3.5		µA/MHz
eUSCI_B	I^2C mode, 100 kbaud	Module input clock		3.5		µA/MHz
RTC_C		32 kHz		100		nA
MPY	Only from start to end of operation	MCLK		25		µA/MHz
AES	Only from start to end of operation	MCLK		21		µA/MHz
CRC16	Only from start to end of operation	MCLK		2.5		µA/MHz
CRC32	Only from start to end of operation	MCLK		2.5		µA/MHz

5.11 Thermal Resistance Characteristics(1)

PARAMETER		PACKAGE	VALUE(1)	UNIT
θ_{JA}	Junction-to-ambient thermal resistance, still air(2)	TSSOP-56 (DGG)	57.7	°C/W
$\theta_{JC(TOP)}$	Junction-to-case (top) thermal resistance(3)		15.1	°C/W
θ_{JB}	Junction-to-board thermal resistance(4)		26.5	°C/W
Ψ_{JB}	Junction-to-board thermal characterization parameter		26.2	°C/W
Ψ_{JT}	Junction-to-top thermal characterization parameter		0.5	°C/W
$\theta_{JC(BOTTOM)}$	Junction-to-case (bottom) thermal resistance(5)		N/A	°C/W
θ_{JA}	Junction-to-ambient thermal resistance, still air(2)	QFP-64 (PN)	59.3	°C/W
$\theta_{JC(TOP)}$	Junction-to-case (top) thermal resistance(3)		19.5	°C/W
θ_{JB}	Junction-to-board thermal resistance(4)		30.8	°C/W
Ψ_{JB}	Junction-to-board thermal characterization parameter		30.5	°C/W
Ψ_{JT}	Junction-to-top thermal characterization parameter		1.0	°C/W
$\theta_{JC(BOTTOM)}$	Junction-to-case (bottom) thermal resistance(5)		N/A	°C/W
θ_{JA}	Junction-to-ambient thermal resistance, still air(2)	QFN-64 (RGC)	29.6	°C/W
$\theta_{JC(TOP)}$	Junction-to-case (top) thermal resistance(3)		15.8	°C/W
θ_{JB}	Junction-to-board thermal resistance(4)		8.5	°C/W
Ψ_{JB}	Junction-to-board thermal characterization parameter		8.5	°C/W
Ψ_{JT}	Junction-to-top thermal characterization parameter		0.2	°C/W
$\theta_{JC(BOTTOM)}$	Junction-to-case (bottom) thermal resistance(5)		1.2	°C/W

(1) N/A = not applicable
(2) The junction-to-ambient thermal resistance under natural convection is obtained in a simulation on a JEDEC-standard, High-K board, as specified in JESD51-7, in an environment described in JESD51-2a.
(3) The junction-to-case (top) thermal resistance is obtained by simulating a cold plate test on the package top. No specific JEDEC-standard test exists, but a close description can be found in the ANSI SEMI standard G30-88.
(4) The junction-to-board thermal resistance is obtained by simulating in an environment with a ring cold plate fixture to control the PCB temperature, as described in JESD51-8.
(5) The junction-to-case (bottom) thermal resistance is obtained by simulating a cold plate test on the exposed (power) pad. No specific JEDEC standard test exists, but a close description can be found in the ANSI SEMI standard G30-88.

Copyright © 2015–2018, Texas Instruments Incorporated

5.12 Timing and Switching Characteristics

5.12.1 Power Supply Sequencing

TI recommends powering AVCC and DVCC pins from the same source. At a minimum, during power up, power down, and device operation, the voltage difference between AVCC and DVCC must not exceed the limits specified in Absolute Maximum Ratings. Exceeding the specified limits may cause malfunction of the device including erroneous writes to RAM and FRAM.

Table 5-1 lists the reset power ramp requirements.

Table 5-1. Brownout and Device Reset Power Ramp Requirements

over recommended ranges of supply voltage and operating free-air temperature (unless otherwise noted)

PARAMETER		TEST CONDITIONS	MIN	MAX	UNIT
V_{VCC_BOR-}	Brownout power-down level(1)	$\lvert dDV_{CC}/d_t \rvert < 3$ V/s(2)	0.73	1.66	V
V_{VCC_BOR+}	Brownout power-up level(1)	$\lvert dDV_{CC}/d_t \rvert < 3$ V/s(2)	0.79	1.68	V

(1) Fast supply voltage changes can trigger a BOR reset even within the recommended supply voltage range. To avoid unwanted BOR resets, the supply voltage must change by less than 0.05 V per microsecond (±0.05 V/µs). Following the data sheet recommendation for capacitor C_{DVCC} should limit the slopes accordingly.
(2) The brownout levels are measured with a slowly changing supply.

Table 5-2 lists the characteristics of the SVS.

Table 5-2. SVS

over recommended ranges of supply voltage and operating free-air temperature (unless otherwise noted)

PARAMETER		TEST CONDITIONS	MIN	TYP	MAX	UNIT
$I_{SVSH,LPM}$	SVS_H current consumption, low power modes			170	300	nA
V_{SVSH-}	SVS_H power-down level(1)		1.75	1.80	1.85	V
V_{SVSH+}	SVS_H power-up level(1)		1.77	1.88	1.99	V
V_{SVSH_hys}	SVS_H hysteresis		40		120	mV
$t_{PD,SVSH,\ AM}$	SVS_H propagation delay, active mode	$dV_{Vcc}/dt = -10$ mV/µs			10	µs

(1) For additional information, see the Dynamic Voltage Scaling Power Solution for MSP430 Devices With Single-Channel LDO Reference Design.

5.12.2 Reset Timing

Table 5-11 lists the required reset input timing.

Table 5-3. Reset Input

over recommended ranges of supply voltage and operating free-air temperature (unless otherwise noted)

PARAMETER		V_{CC}	MIN	MAX	UNIT
$t_{(RST)}$	External reset pulse duration on $\overline{RST}$(1)	2.2 V, 3.0 V	2		µs

(1) Not applicable if the $\overline{RST}$/NMI pin is configured as NMI.

Copyright © 2015–2018, Texas Instruments Incorporated

5.12.3 Clock Specifications

Table 5-4 lists the characteristics of the LFXT.

Table 5-4. Low-Frequency Crystal Oscillator, LFXT(1)

over recommended ranges of supply voltage and operating free-air temperature (unless otherwise noted)

PARAMETER		TEST CONDITIONS	V_{CC}	MIN	TYP	MAX	UNIT
$I_{VCC.LFXT}$	Current consumption	f_{OSC} = 32768 Hz, LFXTBYPASS = 0, LFXTDRIVE = {0}, T_A = 25°C, $C_{L,eff}$ = 3.7 pF, ESR ≈ 44 kΩ	3.0 V		180		nA
		f_{OSC} = 32768 Hz, LFXTBYPASS = 0, LFXTDRIVE = {1}, T_A = 25°C, $C_{L,eff}$ = 6 pF, ESR ≈ 40 kΩ			185		
		f_{OSC} = 32768 Hz, LFXTBYPASS = 0, LFXTDRIVE = {2}, T_A = 25°C, $C_{L,eff}$ = 9 pF, ESR ≈ 40 kΩ			225		
		f_{OSC} = 32768 Hz, LFXTBYPASS = 0, LFXTDRIVE = {3}, T_A = 25°C, $C_{L,eff}$ = 12.5 pF, ESR ≈ 40 kΩ			330		
f_{LFXT}	LFXT oscillator crystal frequency	LFXTBYPASS = 0			32768		Hz
DC_{LFXT}	LFXT oscillator duty cycle	Measured at ACLK, f_{LFXT} = 32768 Hz		30%		70%	
$f_{LFXT,SW}$	LFXT oscillator logic-level square-wave input frequency	LFXTBYPASS = 1(2) (3)		10.5	32.768	50	kHz
$DC_{LFXT, SW}$	LFXT oscillator logic-level square-wave input duty cycle	LFXTBYPASS = 1		30%		70%	
OA_{LFXT}	Oscillation allowance for LF crystals(4)	LFXTBYPASS = 0, LFXTDRIVE = {1}, f_{LFXT} = 32768 Hz, $C_{L,eff}$ = 6 pF			210		kΩ
		LFXTBYPASS = 0, LFXTDRIVE = {3}, f_{LFXT} = 32768 Hz, $C_{L,eff}$ = 12.5 pF			300		
C_{LFXIN}	Integrated load capacitance at LFXIN terminal(5) (6)				2		pF
C_{LFXOUT}	Integrated load capacitance at LFXOUT terminal(5) (6)				2		pF

(1) To improve EMI on the LFXT oscillator, the following guidelines should be observed.
- Keep the trace between the device and the crystal as short as possible.
- Design a good ground plane around the oscillator pins.
- Prevent crosstalk from other clock or data lines into oscillator pins LFXIN and LFXOUT.
- Avoid running PCB traces underneath or adjacent to the LFXIN and LFXOUT pins.
- Use assembly materials and processes that avoid any parasitic load on the oscillator LFXIN and LFXOUT pins.
- If conformal coating is used, make sure that it does not induce capacitive or resistive leakage between the oscillator pins.

(2) When LFXTBYPASS is set, LFXT circuits are automatically powered down. Input signal is a digital square wave with parametrics defined in the Schmitt-trigger Inputs section of this data sheet. Duty cycle requirements are defined by $DC_{LFXT, SW}$.

(3) Maximum frequency of operation of the entire device cannot be exceeded.

(4) Oscillation allowance is based on a safety factor of 5 for recommended crystals. The oscillation allowance is a function of the LFXTDRIVE settings and the effective load. In general, comparable oscillator allowance can be achieved based on the following guidelines, but should be evaluated based on the actual crystal selected for the application:
- For LFXTDRIVE = {0}, $C_{L,eff}$ = 3.7 pF
- For LFXTDRIVE = {1}, $C_{L,eff}$ = 6 pF
- For LFXTDRIVE = {2}, 6 pF ≤ $C_{L,eff}$ ≤ 9 pF
- For LFXTDRIVE = {3}, 9 pF ≤ $C_{L,eff}$ ≤ 12.5 pF

(5) This represents all the parasitic capacitance present at the LFXIN and LFXOUT terminals, respectively, including parasitic bond and package capacitance. The effective load capacitance, $C_{L,eff}$ can be computed as C_{IN} x C_{OUT} / (C_{IN} + C_{OUT}), where C_{IN} and C_{OUT} is the total capacitance at the LFXIN and LFXOUT terminals, respectively.

(6) Requires external capacitors at both terminals. Values are specified by crystal manufacturers. Recommended values supported are 3.7 pF, 6 pF, 9 pF, and 12.5 pF. Maximum shunt capacitance of 1.6 pF. The PCB adds additional capacitance, so it must also be considered in the overall capacitance. Verify that the recommended effective load capacitance of the selected crystal is met.

Copyright © 2015–2018, Texas Instruments Incorporated

Table 5-4. Low-Frequency Crystal Oscillator, LFXT[1] (continued)

over recommended ranges of supply voltage and operating free-air temperature (unless otherwise noted)

PARAMETER		TEST CONDITIONS	V_{CC}	MIN	TYP	MAX	UNIT
$t_{START,LFXT}$	Start-up time[7]	f_{OSC} = 32768 Hz, LFXTBYPASS = 0, LFXTDRIVE = {0}, T_A = 25°C, $C_{L,eff}$ = 3.7 pF	3.0 V		800		ms
		f_{OSC} = 32768 Hz LFXTBYPASS = 0, LFXTDRIVE = {3}, T_A = 25°C, $C_{L,eff}$ = 12.5 pF	3.0 V		1000		
$f_{Fault,LFXT}$	Oscillator fault frequency[8] [9]			0		3500	Hz

(7) Includes start-up counter of 1024 clock cycles.
(8) Frequencies above the MAX specification do not set the fault flag. Frequencies between the MIN and MAX specification may set the flag. A static condition or stuck at fault condition will set the flag.
(9) Measured with logic-level input frequency but also applies to operation with crystals.

Table 5-5 lists the characteristics of the HFXT.

Table 5-5. High-Frequency Crystal Oscillator, HFXT[1]

over recommended ranges of supply voltage and operating free-air temperature (unless otherwise noted)

PARAMETER		TEST CONDITIONS	V_{CC}	MIN	TYP	MAX	UNIT
$I_{DVCC.HFXT}$	HFXT oscillator crystal current HF mode at typical ESR	f_{OSC} = 4 MHz, HFXTBYPASS = 0, HFXTDRIVE = 0, HFFREQ = 1[2], T_A = 25°C, $C_{L,eff}$ = 18 pF, typical ESR, C_{shunt}	3.0 V		75		µA
		f_{OSC} = 8 MHz, HFXTBYPASS = 0, HFXTDRIVE = 1, HFFREQ = 1 T_A = 25°C, $C_{L,eff}$ = 18 pF, typical ESR, C_{shunt}			120		
		f_{OSC} = 16 MHz, HFXTBYPASS = 0, HFXTDRIVE = 2, HFFREQ = 2, T_A = 25°C, $C_{L,eff}$ = 18 pF, typical ESR, C_{shunt}			190		
		f_{OSC} = 24 MHz HFXTBYPASS = 0, HFXTDRIVE = 3, HFFREQ = 3, T_A = 25°C, $C_{L,eff}$ = 18 pF, typical ESR, C_{shunt}			250		
f_{HFXT}	HFXT oscillator crystal frequency, crystal mode	HFXTBYPASS = 0, HFFREQ = 1 [2] [3]		4		8	MHz
		HFXTBYPASS = 0, HFFREQ = 2 [3]		8.01		16	
		HFXTBYPASS = 0, HFFREQ = 3 [3]		16.01		24	
DC_{HFXT}	HFXT oscillator duty cycle	Measured at SMCLK, f_{HFXT} = 16 MHz		40%	50%	60%	

(1) To improve EMI on the HFXT oscillator the following guidelines should be observed.
- Keep the traces between the device and the crystal as short as possible.
- Design a good ground plane around the oscillator pins.
- Prevent crosstalk from other clock or data lines into oscillator pins HFXIN and HFXOUT.
- Avoid running PCB traces underneath or adjacent to the HFXIN and HFXOUT pins.
- Use assembly materials and processes that avoid any parasitic load on the oscillator HFXIN and HFXOUT pins.
- If conformal coating is used, ensure that it does not induce capacitive/resistive leakage between the oscillator pins.

(2) HFFREQ = {0} is not supported for HFXT crystal mode of operation.
(3) Maximum frequency of operation of the entire device cannot be exceeded.

Copyright © 2015–2018, Texas Instruments Incorporated

Table 5-5. High-Frequency Crystal Oscillator, HFXT[1] (continued)

over recommended ranges of supply voltage and operating free-air temperature (unless otherwise noted)

PARAMETER		TEST CONDITIONS	V_{CC}	MIN	TYP	MAX	UNIT
$f_{HFXT,SW}$	HFXT oscillator logic-level square-wave input frequency, bypass mode	HFXTBYPASS = 1, HFFREQ = 0[4] [3]		0.9		4	MHz
		HFXTBYPASS = 1, HFFREQ = 1[4] [3]		4.01		8	
		HFXTBYPASS = 1, HFFREQ = 2[4] [3]		8.01		16	
		HFXTBYPASS = 1, HFFREQ = 3[4] [3]		16.01		24	
$DC_{HFXT,SW}$	HFXT oscillator logic-level square-wave input duty cycle	HFXTBYPASS = 1		40%		60%	
OA_{HFXT}	Oscillation allowance for HFXT crystals[5]	HFXTBYPASS = 0, HFXTDRIVE = 0, HFFREQ = 1[2], $f_{HFXT,HF}$ = 4 MHz, $C_{L,eff}$ = 16 pF			450		Ω
		HFXTBYPASS = 0, HFXTDRIVE = 1, HFFREQ = 1, $f_{HFXT,HF}$ = 8 MHz, $C_{L,eff}$ = 16 pF			320		
		HFXTBYPASS = 0, HFXTDRIVE = 2, HFFREQ = 2, $f_{HFXT,HF}$ = 16 MHz, $C_{L,eff}$ = 16 pF			200		
		HFXTBYPASS = 0, HFXTDRIVE = 3, HFFREQ = 3, $f_{HFXT,HF}$ = 24 MHz, $C_{L,eff}$ = 16 pF			200		
$t_{START,HFXT}$	Start-up time[6]	f_{OSC} = 4 MHz, HFXTBYPASS = 0, HFXTDRIVE = 0, HFFREQ = 1, T_A = 25°C, $C_{L,eff}$ = 16 pF	3.0 V		1.6		ms
		f_{OSC} = 24 MHz, HFXTBYPASS = 0, HFXTDRIVE = 3, HFFREQ = 3, T_A = 25°C, $C_{L,eff}$ = 16 pF	3.0 V		0.6		
C_{HFXIN}	Integrated load capacitance at HFXIN terminal[7] [8]				2		pF
C_{HFXOUT}	Integrated load capacitance at HFXOUT terminal[7] [8]				2		pF
$f_{Fault,HFXT}$	Oscillator fault frequency[9] [10]			0		800	kHz

(4) When HFXTBYPASS is set, HFXT circuits are automatically powered down. Input signal is a digital square wave with parametrics defined in the Schmitt-trigger Inputs section of this data sheet. Duty cycle requirements are defined by $DC_{HFXT, SW}$.
(5) Oscillation allowance is based on a safety factor of 5 for recommended crystals.
(6) Includes start-up counter of 1024 clock cycles.
(7) This represents all the parasitic capacitance present at the HFXIN and HFXOUT terminals, respectively, including parasitic bond and package capacitance. The effective load capacitance, $C_{L,eff}$ can be computed as $C_{IN} \times C_{OUT} / (C_{IN} + C_{OUT})$, where C_{IN} and C_{OUT} is the total capacitance at the HFXIN and HFXOUT terminals, respectively.
(8) Requires external capacitors at both terminals. Values are specified by crystal manufacturers. Recommended values supported are 14 pF, 16 pF, and 18 pF. Maximum shunt capacitance of 7 pF. The PCB adds additional capacitance, so it must also be considered in the overall capacitance. Verify that the recommended effective load capacitance of the selected crystal is met.
(9) Frequencies above the MAX specification do not set the fault flag. Frequencies between the MIN and MAX might set the flag. A static condition or stuck at fault condition will set the flag.
(10) Measured with logic-level input frequency but also applies to operation with crystals.

Table 5-6 lists the characteristics of the DCO.

Table 5-6. DCO

over recommended ranges of supply voltage and operating free-air temperature (unless otherwise noted)

PARAMETER		TEST CONDITIONS	V_{CC}	MIN	TYP	MAX	UNIT
f_{DCO1}	DCO frequency range 1 MHz, trimmed	Measured at SMCLK, divide by 1, DCORSEL = 0, DCOFSEL = 0 DCORSEL = 1, DCOFSEL = 0			1	±3.5%	MHz
$f_{DCO2.7}$	DCO frequency range 2.7 MHz, trimmed	Measured at SMCLK, divide by 1, DCORSEL = 0, DCOFSEL = 1			2.667	±3.5%	MHz
$f_{DCO3.5}$	DCO frequency range 3.5 MHz, trimmed	Measured at SMCLK, divide by 1, DCORSEL = 0, DCOFSEL = 2			3.5	±3.5%	MHz
f_{DCO4}	DCO frequency range 4 MHz, trimmed	Measured at SMCLK, divide by 1, DCORSEL = 0, DCOFSEL = 3			4	±3.5%	MHz
$f_{DCO5.3}$	DCO frequency range 5.3 MHz, trimmed	Measured at SMCLK, divide by 1, DCORSEL = 0, DCOFSEL = 4 DCORSEL = 1, DCOFSEL = 1			5.333	±3.5%	MHz
f_{DCO7}	DCO frequency range 7 MHz, trimmed	Measured at SMCLK, divide by 1, DCORSEL = 0, DCOFSEL = 5 DCORSEL = 1, DCOFSEL = 2			7	±3.5%	MHz
f_{DCO8}	DCO frequency range 8 MHz, trimmed	Measured at SMCLK, divide by 1, DCORSEL = 0, DCOFSEL = 6 DCORSEL = 1, DCOFSEL = 3			8	±3.5%	MHz
f_{DCO16}	DCO frequency range 16 MHz, trimmed	Measured at SMCLK, divide by 1, DCORSEL = 1, DCOFSEL = 4			16	±3.5% (1)	MHz
f_{DCO21}	DCO frequency range 21 MHz, trimmed	Measured at SMCLK, divide by 2, DCORSEL = 1, DCOFSEL = 5			21	±3.5% (1)	MHz
f_{DCO24}	DCO frequency range 24 MHz, trimmed	Measured at SMCLK, divide by 2, DCORSEL = 1, DCOFSEL = 6			24	±3.5% (1)	MHz
$f_{DCO,DC}$	Duty cycle	Measured at SMCLK, divide by 1, No external divide, all DCORSEL and DCOFSEL settings except DCORSEL = 1, DCOFSEL = 5 and DCORSEL = 1, DCOFSEL = 6		48%	50%	52%	
$t_{DCO, JITTER}$	DCO jitter	Based on f_{signal} = 10 kHz and DCO used for 12-bit SAR ADC sampling source. This achieves >74-dB SNR due to jitter; that is, it is limited by ADC performance.			2	3	ns
df_{DCO}/dT	DCO temperature drift (2)		3.0 V		0.01		%/ºC

(1) After a wakeup from LPM1, LPM2, LPM3 or LPM4, the DCO frequency f_{DCO} might exceed the specified frequency range for a few clocks cycles by up to 5% before settling into the specified steady state frequency range.
(2) Calculated using the box method: (MAX(–40°C to 85ºC) – MIN(–40°C to 85ºC)) / MIN(–40°C to 85ºC) / (85ºC – (–40ºC))

Table 5-7 lists the characteristics of the VLO.

Table 5-7. Internal Very-Low-Power Low-Frequency Oscillator (VLO)

over recommended ranges of supply voltage and operating free-air temperature (unless otherwise noted)

PARAMETER		TEST CONDITIONS	V_{CC}	MIN	TYP	MAX	UNIT
I_{VLO}	Current consumption				100		nA
f_{VLO}	VLO frequency	Measured at ACLK		6	9.4	14	kHz
df_{VLO}/d_T	VLO frequency temperature drift	Measured at ACLK (1)			0.2		%/°C
df_{VLO}/dV_{CC}	VLO frequency supply voltage drift	Measured at ACLK (2)			0.7		%/V
$f_{VLO,DC}$	Duty cycle	Measured at ACLK		40%	50%	60%	

(1) Calculated using the box method: (MAX(–40°C to 85°C) – MIN(–40°C to 85°C)) / MIN(–40°C to 85°C) / (85°C – (–40°C))
(2) Calculated using the box method: (MAX(1.8 V to 3.6 V) – MIN(1.8 V to 3.6 V)) / MIN(1.8 V to 3.6 V) / (3.6 V – 1.8 V)

Copyright © 2015–2018, Texas Instruments Incorporated

Table 5-8 lists the characteristics of the MODOSC.

Table 5-8. Module Oscillator (MODOSC)

over recommended ranges of supply voltage and operating free-air temperature (unless otherwise noted)

PARAMETER		TEST CONDITIONS	MIN	TYP	MAX	UNIT
I_{MODOSC}	Current consumption	Enabled		25		µA
f_{MODOSC}	MODOSC frequency		4.0	4.8	5.4	MHz
f_{MODOSC}/dT	MODOSC frequency temperature drift (1)			0.08		%/°C
f_{MODOSC}/dV_{CC}	MODOSC frequency supply voltage drift (2)			1.4		%/V
DC_{MODOSC}	Duty cycle	Measured at SMCLK, divide by 1	40%	50%	60%	

(1) Calculated using the box method: (MAX(–40°C to 85°C) – MIN(–40°C to 85°C)) / MIN(–40°C to 85°C) / (85°C – (–40°C))
(2) Calculated using the box method: (MAX(1.8 V to 3.6 V) – MIN(1.8 V to 3.6 V)) / MIN(1.8 V to 3.6 V) / (3.6 V – 1.8 V)

5.12.4 Wake-up Characteristics

Table 5-9 lists the device wake-up times.

Table 5-9. Wake-up Times From Low-Power Modes and Reset

over recommended ranges of supply voltage and operating free-air temperature (unless otherwise noted)

PARAMETER		TEST CONDITIONS	V_{CC}	MIN	TYP	MAX	UNIT
$t_{WAKE\text{-}UP\ FRAM}$	Additional wake-up time to activate the FRAM in AM if previously disabled by the FRAM controller or from an LPM if immediate activation is selected				6	10	µs
$t_{WAKE\text{-}UP\ LPM0}$	Wake-up time from LPM0 to active mode	MCLKREQEN = 1 (1)	2.2 V, 3.0 V			400 ns + 1.5 / f_{DCO}	
		MCLKREQEN = 0 (1)(2)	2.2 V, 3.0 V			400 ns + 2.5 / f_{DCO}	
$t_{WAKE\text{-}UP\ LPM1}$	Wake-up time from LPM1 to active mode(1)		2.2 V, 3.0 V		6		µs
$t_{WAKE\text{-}UP\ LPM2}$	Wake-up time from LPM2 to active mode(1)		2.2 V, 3.0 V		6		µs
$t_{WAKE\text{-}UP\ LPM3}$	Wake-up time from LPM3 to active mode(1)		2.2 V, 3.0 V		7	10	µs
$t_{WAKE\text{-}UP\ LPM4}$	Wake-up time from LPM4 to active mode(1)		2.2 V, 3.0 V		7	10	µs
$t_{WAKE\text{-}UP\ LPM3.5}$	Wake-up time from LPM3.5 to active mode(3)		2.2 V, 3.0 V		250	350	µs
$t_{WAKE\text{-}UP\ LPM4.5}$	Wake-up time from LPM4.5 to active mode(3)	SVSHE = 1	2.2 V, 3.0 V		250	350	µs
		SVSHE = 0	2.2 V, 3.0 V		0.4	0.8	ms
$t_{WAKE\text{-}UP\text{-}RST}$	Wake-up time from a $\overline{RST}$ pin triggered reset to active mode(3)		2.2 V, 3.0 V		250	350	µs
$t_{WAKE\text{-}UP\text{-}BOR}$	Wake-up time from power-up to active mode (3)		2.2 V, 3.0 V		0.5	1.0	ms

(1) The wake-up time is measured from the edge of an external wake-up signal (for example, port interrupt or wake-up event) to the first externally observable MCLK clock edge with MCLKREQEN = 1. This time includes the activation of the FRAM during wakeup.
(2) With MCLKREQEN = 0, the MCLK is gated one additoinal one clock cycle (wake from LPM0, LPM1, LPM2, LPM3, and LPM4). The device wake-up time is not affected by the status of the MCLKREQEN bit.
(3) The wake-up time is measured from the edge of an external wake-up signal (for example, port interrupt or wake-up event) until the first instruction of the user program is executed.

Table 5-10 lists the typical charge required for wakeup.

Table 5-10. Typical Wake-up Charge(1)

PARAMETER		TEST CONDITIONS	MIN	TYP	MAX	UNIT
$Q_{WAKE\text{-}UP\ FRAM}$	Charge used for activating the FRAM in AM or during wakeup from LPM0 if previously disabled by the FRAM controller.			15.1		nAs
$Q_{WAKE\text{-}UP\ LPM0}$	Charge used to wake up from LPM0 to active mode (with FRAM active)			4.4		nAs
$Q_{WAKE\text{-}UP\ LPM1}$	Charge used to wake up from LPM1 to active mode (with FRAM active)			15.1		nAs
$Q_{WAKE\text{-}UP\ LPM2}$	Charge used to wake up from LPM2 to active mode (with FRAM active)			15.3		nAs
$Q_{WAKE\text{-}UP\ LPM3}$	Charge used to wake up from LPM3 to active mode (with FRAM active)			16.5		nAs
$Q_{WAKE\text{-}UP\ LPM4}$	Charge used to wake up from LPM4 to active mode (with FRAM active)			16.5		nAs
$Q_{WAKE\text{-}UP\ LPM3.5}$	Charge used to wake up from LPM3.5 to active mode(2)			76		nAs
$Q_{WAKE\text{-}UP\ LPM4.5}$	Charge used to wake up from LPM4.5 to active mode(2)	SVSHE = 1		77		nAs
		SVSHE = 0		77.5		
$Q_{WAKE\text{-}UP\text{-}RESET}$	Charge used for reset from $\overline{RST}$ or BOR event to active mode(2)			75		nAs

(1) Charge used during the wake-up time from a given low-power mode to active mode. This does not include the energy required in active mode (for example, for an interrupt service routine).
(2) Charge required until start of user code. This does not include the energy required to reconfigure the device.

Copyright © 2015–2018, Texas Instruments Incorporated

5.12.4.1 Typical Characteristics, Average LPM Currents vs Wake-up Frequency

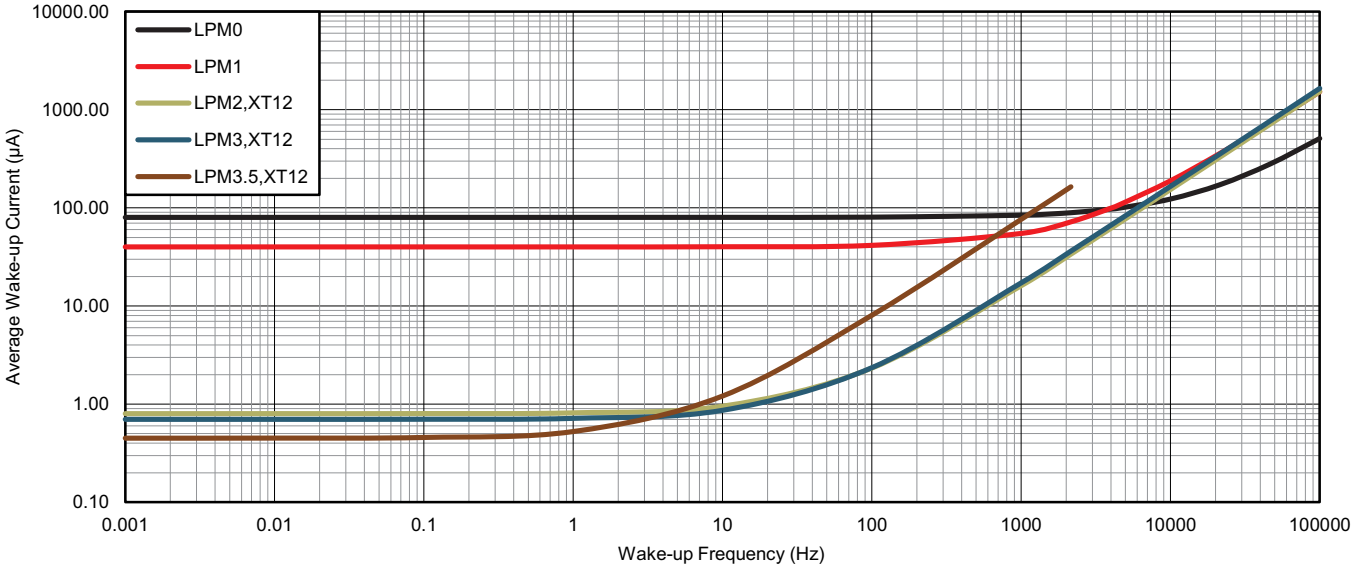

NOTE: The average wake-up current does not include the energy required in active mode; for example, for an interrupt service routine or to reconfigure the device.

Figure 5-6. Average LPM Currents vs Wake-up Frequency at 25°C

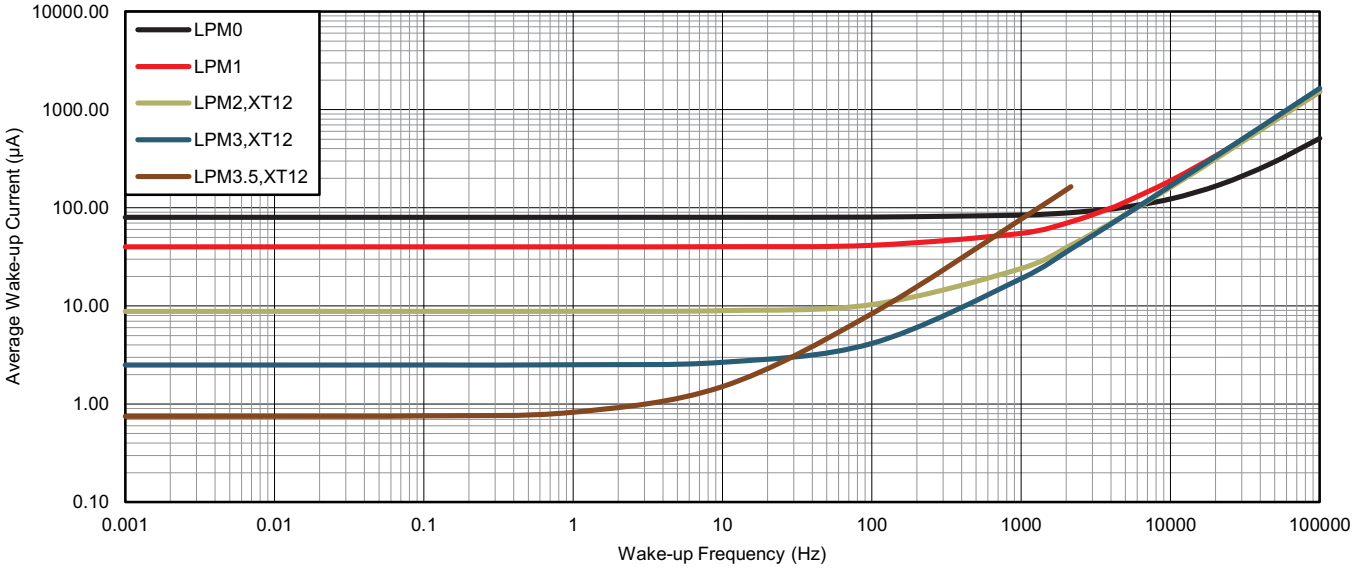

NOTE: The average wake-up current does not include the energy required in active mode; for example, for an interrupt service routine or to reconfigure the device.

Figure 5-7. Average LPM Currents vs Wake-up Frequency at 85°C

5.12.5 Digital I/Os

Table 5-11 lists the characteristics of the digital inputs.

Table 5-11. Digital Inputs

over recommended ranges of supply voltage and operating free-air temperature (unless otherwise noted)

PARAMETER		TEST CONDITIONS	V_{CC}	MIN	TYP	MAX	UNIT
V_{IT+}	Positive-going input threshold voltage		2.2 V	1.2		1.65	V
			3.0 V	1.65		2.25	
V_{IT-}	Negative-going input threshold voltage		2.2 V	0.55		1.00	V
			3.0 V	0.75		1.35	
V_{hys}	Input voltage hysteresis ($V_{IT+} – V_{IT-}$)		2.2 V	0.44		0.98	V
			3.0 V	0.60		1.30	
R_{Pull}	Pullup or pulldown resistor	For pullup: $V_{IN} = V_{SS}$ For pulldown: $V_{IN} = V_{CC}$		20	35	50	kΩ
$C_{I,dig}$	Input capacitance, digital only port pins	$V_{IN} = V_{SS}$ or V_{CC}			3		pF
$C_{I,ana}$	Input capacitance, port pins with shared analog functions(1)	$V_{IN} = V_{SS}$ or V_{CC}			5		pF
$I_{Ikg(Px.y)}$	High-impedance input leakage current	See (2)(3)	2.2 V, 3.0 V	–20		+20	nA
$t_{(int)}$	External interrupt timing (external trigger pulse duration to set interrupt flag)(4)	Ports with interrupt capability (see block diagram and terminal function descriptions).	2.2 V, 3.0 V	20			ns
$t_{(RST)}$	External reset pulse duration on $\overline{RST}$(5)		2.2 V, 3.0 V	2			µs

(1) If the port pins PJ.4/LFXIN and PJ.5/LFXOUT are used as digital I/Os, they are connected by a 4-pF capacitor and a 35-MΩ resistor in series. At frequencies of approximately 1 kHz and lower, the 4-pF capacitor can add to the pin capacitance of PJ.4/LFXIN and PJ.5/LFXOUT.
(2) The input leakage current is measured with V_{SS} or V_{CC} applied to the corresponding pins, unless otherwise noted.
(3) The input leakage of the digital port pins is measured individually. The port pin is selected for input and the pullup or pulldown resistor is disabled.
(4) An external signal sets the interrupt flag every time the minimum interrupt pulse duration $t_{(int)}$ is met. It may be set by trigger signals shorter than $t_{(int)}$.
(5) Not applicable if the $\overline{RST}$/NMI pin is configured as NMI.

Copyright © 2015–2018, Texas Instruments Incorporated

Table 5-12 lists the characteristics of the digital outputs.

Table 5-12. Digital Outputs

over recommended ranges of supply voltage and operating free-air temperature (unless otherwise noted)

PARAMETER		TEST CONDITIONS	V_{CC}	MIN	TYP	MAX	UNIT
V_{OH}	High-level output voltage	$I_{(OHmax)}$ = –1 mA (1)	2.2 V	V_{CC} – 0.25		V_{CC}	V
		$I_{(OHmax)}$ = –3 mA (2)		V_{CC} – 0.60		V_{CC}	
		$I_{(OHmax)}$ = –2 mA (1)	3.0 V	V_{CC} – 0.25		V_{CC}	
		$I_{(OHmax)}$ = –6 mA (2)		V_{CC} – 0.60		V_{CC}	
V_{OL}	Low-level output voltage	$I_{(OLmax)}$ = 1 mA (1)	2.2 V	V_{SS}		V_{SS} + 0.25	V
		$I_{(OLmax)}$ = 3 mA (2)		V_{SS}		V_{SS} + 0.60	
		$I_{(OLmax)}$ = 2 mA (1)	3.0 V	V_{SS}		V_{SS} + 0.25	
		$I_{(OLmax)}$ = 6 mA (2)		V_{SS}		V_{SS} + 0.60	
$f_{Px.y}$	Port output frequency (with load) (3)	C_L = 20 pF, R_L (4) (5)	2.2 V	16			MHz
			3.0 V	16			
f_{Port_CLK}	Clock output frequency (3)	ACLK, MCLK, or SMCLK at configured output port C_L = 20 pF (5)	2.2 V	16			MHz
			3.0 V	16			
$t_{rise,dig}$	Port output rise time, digital only port pins	C_L = 20 pF	2.2 V		4	15	ns
			3.0 V		3	15	
$t_{fall,dig}$	Port output fall time, digital only port pins	C_L = 20 pF	2.2 V		4	15	ns
			3.0 V		3	15	
$t_{rise,ana}$	Port output rise time, port pins with shared analog functions	C_L = 20 pF	2.2 V		6	15	ns
			3.0 V		4	15	
$t_{fall,ana}$	Port output fall time, port pins with shared analog functions	C_L = 20 pF	2.2 V		6	15	ns
			3.0 V		4	15	

(1) The maximum total current, $I_{(OHmax)}$ and $I_{(OLmax)}$, for all outputs combined should not exceed ±48 mA to hold the maximum voltage drop specified.
(2) The maximum total current, $I_{(OHmax)}$ and $I_{(OLmax)}$, for all outputs combined should not exceed ±100 mA to hold the maximum voltage drop specified.
(3) The port can output frequencies at least up to the specified limit. It might support higher frequencies.
(4) A resistive divider with 2 × R1 and R1 = 1.6 kΩ between V_{CC} and V_{SS} is used as load. The output is connected to the center tap of the divider. C_L = 20 pF is connected from the output to V_{SS}.
(5) The output voltage reaches at least 10% and 90% V_{CC} at the specified toggle frequency.

Copyright © 2015–2018, Texas Instruments Incorporated

5.12.5.1 Typical Characteristics, Digital Outputs at 3.0 V and 2.2 V

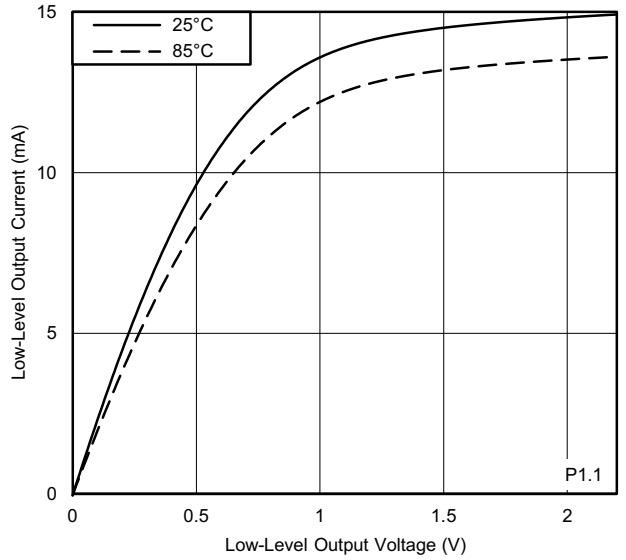

V_{CC} = 2.2 V

Figure 5-8. Typical Low-Level Output Current vs Low-Level Output Voltage

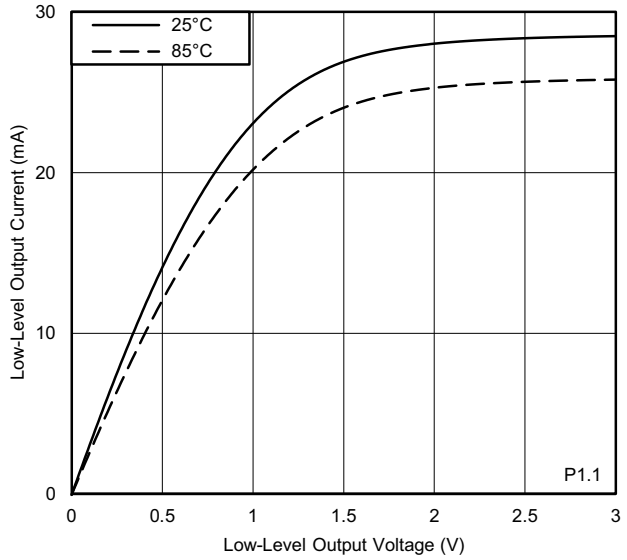

V_{CC} = 3.0 V

Figure 5-9. Typical Low-Level Output Current vs Low-Level Output Voltage

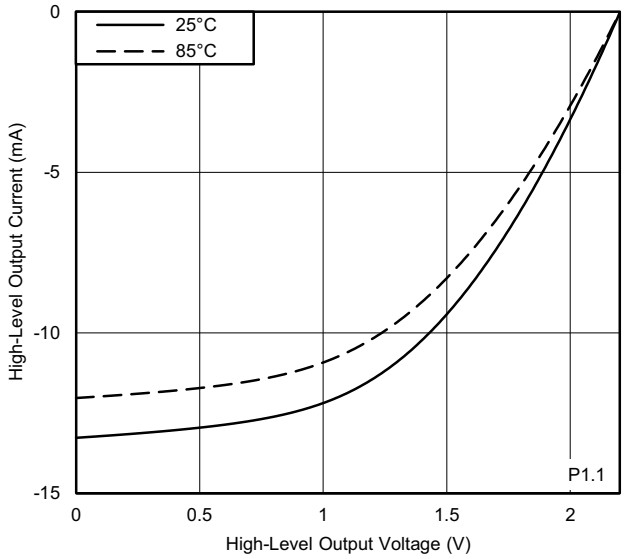

V_{CC} = 2.2 V

Figure 5-10. Typical High-Level Output Current vs High-Level Output Voltage

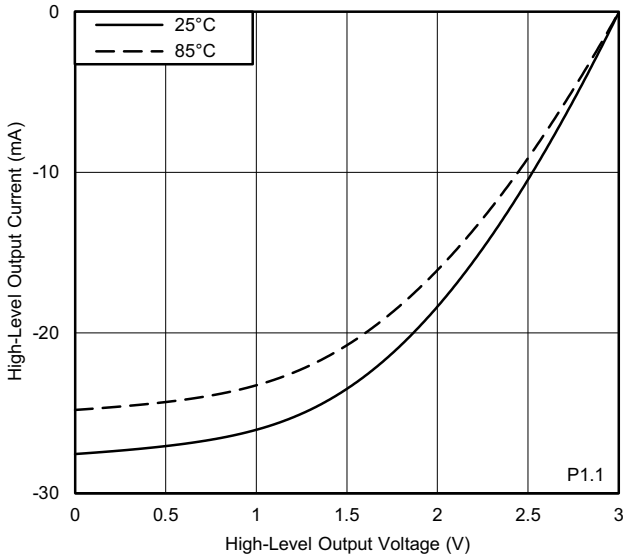

V_{CC} = 3.0 V

Figure 5-11. Typical High-Level Output Current vs High-Level Output Voltage

Copyright © 2015–2018, Texas Instruments Incorporated

Table 5-13 lists the characteristics of the pin oscillator.

Table 5-13. Pin-Oscillator Frequency, Ports Px

over recommended ranges of supply voltage and operating free-air temperature (unless otherwise noted)

PARAMETER		TEST CONDITIONS	V_{CC}	MIN	TYP	MAX	UNIT
$fo_{Px.y}$	Pin-oscillator frequency	Px.y, C_L = 10 pF(1)	3.0 V		1200		kHz
		Px.y, C_L = 20 pF(1)	3.0 V		650		kHz

(1) C_L is the external load capacitance connected from the output to V_{SS} and includes all parasitic effects such as PCB traces.

5.12.5.2 Typical Characteristics, Pin-Oscillator Frequency

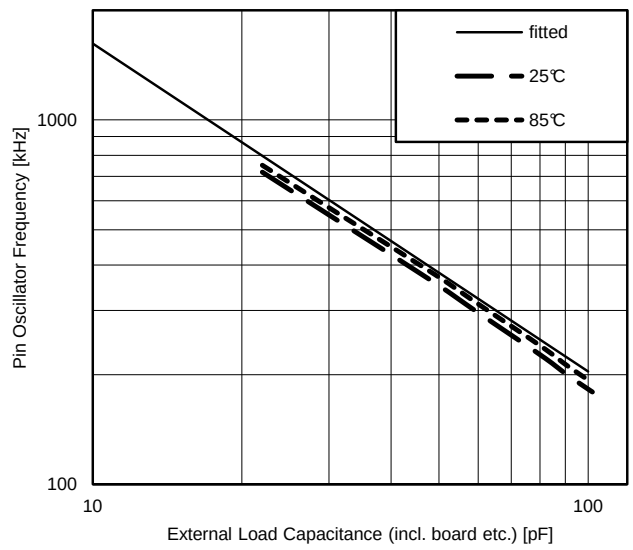

V_{CC} = 2.2 V One output active at a time.

Figure 5-12. Typical Oscillation Frequency vs Load Capacitance

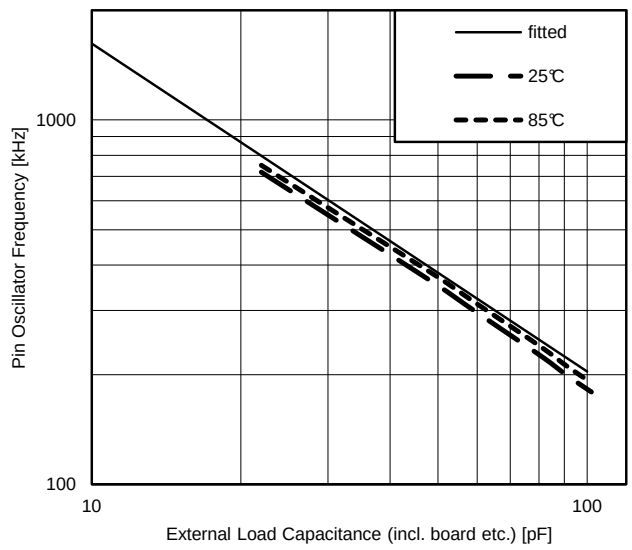

V_{CC} = 3.0 V One output active at a time.

Figure 5-13. Typical Oscillation Frequency vs Load Capacitance

5.12.6 Timer_A and Timer_B

Table 5-14 lists the characteristics of the Timer_A.

Table 5-14. Timer_A

over recommended ranges of supply voltage and operating free-air temperature (unless otherwise noted)

PARAMETER		TEST CONDITIONS	V_{CC}	MIN	TYP	MAX	UNIT
f_{TA}	Timer_A input clock frequency	Internal: SMCLK or ACLK, External: TACLK, Duty cycle = 50% ±10%	2.2 V, 3.0 V			16	MHz
$t_{TA,cap}$	Timer_A capture timing	All capture inputs, minimum pulse duration required for capture	2.2 V, 3.0 V	20			ns

Table 5-15 lists the characteristics of the Timer_B.

Table 5-15. Timer_B

over recommended ranges of supply voltage and operating free-air temperature (unless otherwise noted)

PARAMETER		TEST CONDITIONS	V_{CC}	MIN	TYP	MAX	UNIT
f_{TB}	Timer_B input clock frequency	Internal: SMCLK or ACLK, External: TBCLK, Duty cycle = 50% ±10%	2.2 V, 3.0 V			16	MHz
$t_{TB,cap}$	Timer_B capture timing	All capture inputs, minimum pulse duration required for capture	2.2 V, 3.0 V	20			ns

5.12.7 eUSCI

Table 5-16 lists the supported clock frequencies for the eUSCI in UART mode.

Table 5-16. eUSCI (UART Mode) Clock Frequency

PARAMETER		CONDITIONS	V_{CC}	MIN	MAX	UNIT
f_{eUSCI}	eUSCI input clock frequency	Internal: SMCLK, ACLK External: UCLK Duty cycle = 50% ±10%			16	MHz
f_{BITCLK}	BITCLK clock frequency (equals baud rate in MBaud)				4	MHz

Table 5-17 lists the characteristics of the eUSCI in UART mode.

Table 5-17. eUSCI (UART Mode)

over recommended ranges of supply voltage and operating free-air temperature (unless otherwise noted)

PARAMETER		TEST CONDITIONS	V_{CC}	MIN	TYP	MAX	UNIT
t_t	UART receive deglitch time[(1)]	UCGLITx = 0	2.2 V, 3.0 V	5		30	ns
		UCGLITx = 1		20		90	
		UCGLITx = 2		35		160	
		UCGLITx = 3		50		220	

(1) Pulses on the UART receive input (UCxRX) that are shorter than the UART receive deglitch time are suppressed. Thus the selected deglitch time can limit the maximum usable baud rate. To make sure that pulses are correctly recognized, their duration should exceed the maximum specification of the deglitch time.

Copyright © 2015–2018, Texas Instruments Incorporated

Table 5-18 lists the supported clock frequencies for the eUSCI in SPI master mode.

Table 5-18. eUSCI (SPI Master Mode) Clock Frequency

PARAMETER		CONDITIONS	V_{CC}	MIN	MAX	UNIT
f_{eUSCI}	eUSCI input clock frequency	Internal: SMCLK, ACLK Duty cycle = 50% ±10%			16	MHz

Table 5-19 lists the characteristics of the eUSCI in SPI master mode.

Table 5-19. eUSCI (SPI Master Mode)

over recommended ranges of supply voltage and operating free-air temperature (unless otherwise noted)(1)

PARAMETER		TEST CONDITIONS	V_{CC}	MIN	TYP	MAX	UNIT
$t_{STE,LEAD}$	STE lead time, STE active to clock	UCSTEM = 1, UCMODEx = 01 or 10		1			UCxCLK cycles
$t_{STE,LAG}$	STE lag time, last clock to STE inactive	UCSTEM = 1, UCMODEx = 01 or 10		1			UCxCLK cycles
$t_{STE,ACC}$	STE access time, STE active to SIMO data out	UCSTEM = 0, UCMODEx = 01 or 10	2.2 V, 3.0 V			60	ns
$t_{STE,DIS}$	STE disable time, STE inactive to SOMI high impedance	UCSTEM = 0, UCMODEx = 01 or 10	2.2 V, 3.0 V			80	ns
$t_{SU,MI}$	SOMI input data setup time		2.2 V	40			ns
			3.0 V	40			ns
$t_{HD,MI}$	SOMI input data hold time		2.2 V	0			ns
			3.0 V	0			ns
$t_{VALID,MO}$	SIMO output data valid time(2)	UCLK edge to SIMO valid, C_L = 20 pF	2.2 V			10	ns
			3.0 V			10	ns
$t_{HD,MO}$	SIMO output data hold time(3)	C_L = 20 pF	2.2 V		0		ns
			3.0 V		0		ns

(1) $f_{UCxCLK} = 1 / 2t_{LO/HI}$ with $tL_{O/HI} = \max(t_{VALID,MO(eUSCI)} + t_{SU,SI(Slave)}, t_{SU,MI(eUSCI)} + t_{VALID,SO(Slave)})$.
For the slave parameters $t_{SU,SI(Slave)}$ and $t_{VALID,SO(Slave)}$, see the SPI parameters of the attached slave.
(2) Specifies the time to drive the next valid data to the SIMO output after the output changing UCLK clock edge. See the timing diagrams in Figure 5-14 and Figure 5-15.
(3) Specifies how long data on the SIMO output is valid after the output changing UCLK clock edge. Negative values indicate that the data on the SIMO output can become invalid before the output changing clock edge observed on UCLK. See the timing diagrams in Figure 5-14 and Figure 5-15.

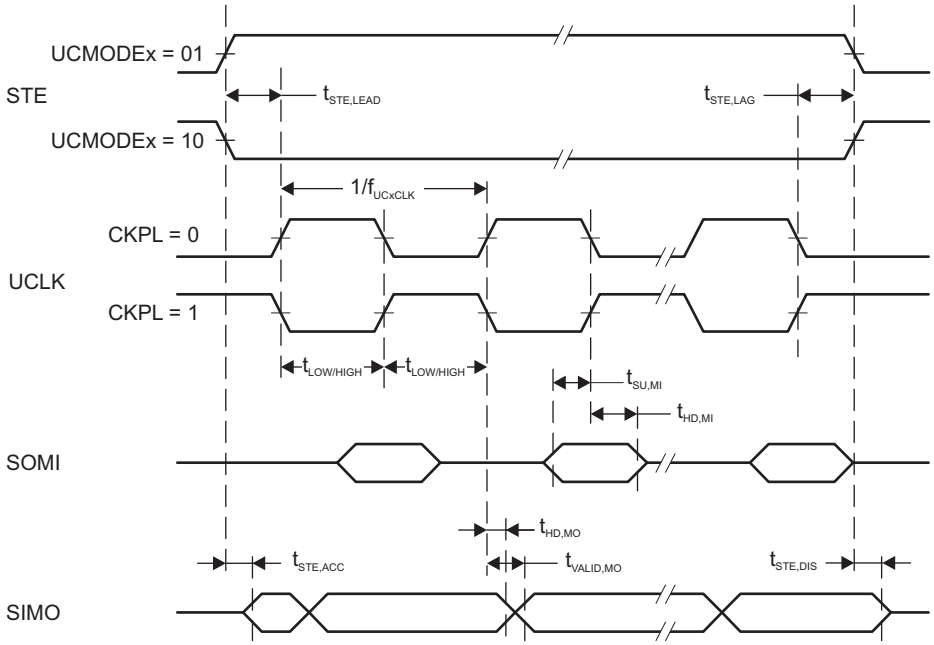

Figure 5-14. SPI Master Mode, CKPH = 0

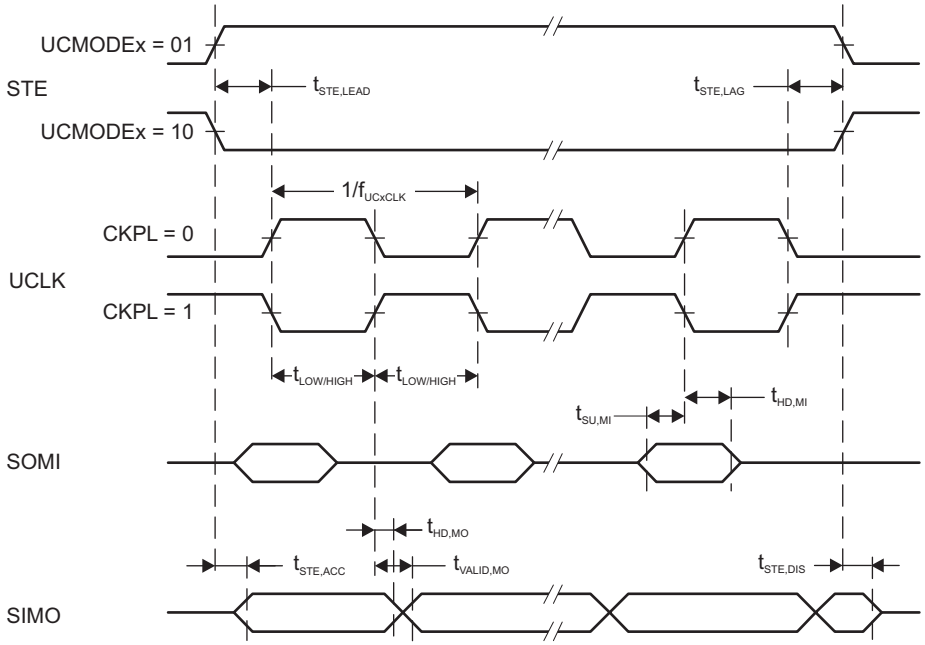

Figure 5-15. SPI Master Mode, CKPH = 1

Copyright © 2015–2018, Texas Instruments Incorporated

Table 5-20 lists the characteristics of the eUSCI in SPI slave mode.

Table 5-20. eUSCI (SPI Slave Mode)

over recommended ranges of supply voltage and operating free-air temperature (unless otherwise noted)(1)

PARAMETER		TEST CONDITIONS	V_{CC}	MIN	TYP	MAX	UNIT
$t_{STE,LEAD}$	STE lead time, STE active to clock		2.2 V	50			ns
			3.0 V	40			
$t_{STE,LAG}$	STE lag time, last clock to STE inactive		2.2 V	2			ns
			3.0 V	3			
$t_{STE,ACC}$	STE access time, STE active to SOMI data out		2.2 V			50	ns
			3.0 V			40	
$t_{STE,DIS}$	STE disable time, STE inactive to SOMI high impedance		2.2 V			50	ns
			3.0 V			45	
$t_{SU,SI}$	SIMO input data setup time		2.2 V	4			ns
			3.0 V	4			
$t_{HD,SI}$	SIMO input data hold time		2.2 V	7			ns
			3.0 V	7			
$t_{VALID,SO}$	SOMI output data valid time(2)	UCLK edge to SOMI valid, C_L = 20 pF	2.2 V			35	ns
			3.0 V			35	
$t_{HD,SO}$	SOMI output data hold time(3)	C_L = 20 pF	2.2 V	0			ns
			3.0 V	0			

(1) $f_{UCxCLK} = 1/2t_{LO/HI}$ with $tL_{O/HI} \geq \max(t_{VALID,MO(Master)} + t_{SU,SI(eUSCI)}, t_{SU,MI(Master)} + t_{VALID,SO(eUSCI)})$.
For the master parameters $t_{SU,MI(Master)}$ and $t_{VALID,MO(Master)}$ see the SPI parameters of the attached slave.
(2) Specifies the time to drive the next valid data to the SOMI output after the output changing UCLK clock edge. See the timing diagrams in Figure 5-16 and Figure 5-17.
(3) Specifies how long data on the SOMI output is valid after the output changing UCLK clock edge. See the timing diagrams in Figure 5-16 and Figure 5-17.

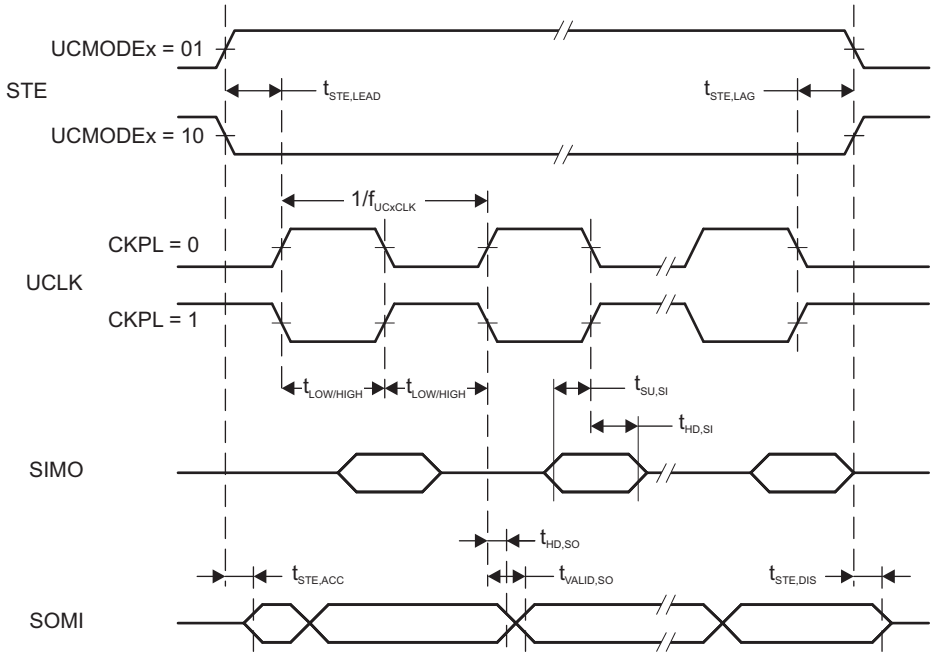

Figure 5-16. SPI Slave Mode, CKPH = 0

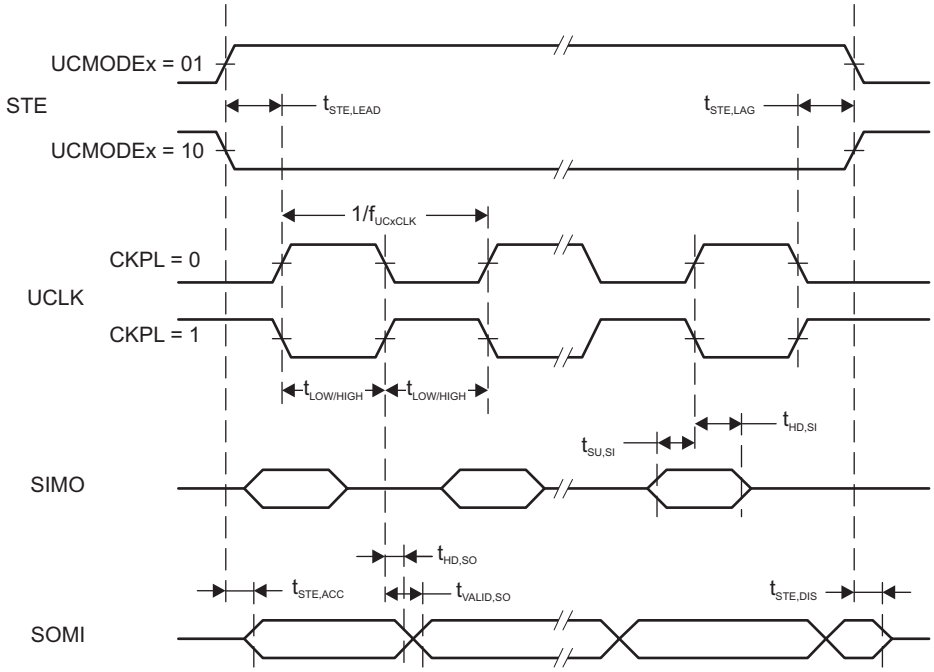

Figure 5-17. SPI Slave Mode, CKPH = 1

Copyright © 2015–2018, Texas Instruments Incorporated

Table 5-21 lists the characteristics of the eUSCI in I²C mode.

Table 5-21. eUSCI (I²C Mode)

over recommended ranges of supply voltage and operating free-air temperature (unless otherwise noted) (see Figure 5-18)

PARAMETER		TEST CONDITIONS	V_{CC}	MIN	TYP	MAX	UNIT
f_{eUSCI}	eUSCI input clock frequency	Internal: SMCLK, ACLK External: UCLK Duty cycle = 50% ±10%				16	MHz
f_{SCL}	SCL clock frequency		2.2 V, 3.0 V	0		400	kHz
$t_{HD,STA}$	Hold time (repeated) START	f_{SCL} = 100 kHz	2.2 V, 3.0 V	4.0			µs
		f_{SCL} > 100 kHz		0.6			
$t_{SU,STA}$	Setup time for a repeated START	f_{SCL} = 100 kHz	2.2 V, 3.0 V	4.7			µs
		f_{SCL} > 100 kHz		0.6			
$t_{HD,DAT}$	Data hold time		2.2 V, 3.0 V	0			ns
$t_{SU,DAT}$	Data setup time		2.2 V, 3.0 V	100			ns
$t_{SU,STO}$	Setup time for STOP	f_{SCL} = 100 kHz	2.2 V, 3.0 V	4.0			µs
		f_{SCL} > 100 kHz		0.6			
t_{BUF}	Bus free time between a STOP and START condition	f_{SCL} = 100 kHz		4.7			us
		f_{SCL} > 100 kHz		1.3			
t_{SP}	Pulse duration of spikes suppressed by input filter	UCGLITx = 0	2.2 V, 3.0 V	50		250	ns
		UCGLITx = 1		25		125	
		UCGLITx = 2		12.5		62.5	
		UCGLITx = 3		6.3		31.5	
$t_{TIMEOUT}$	Clock low time-out	UCCLTOx = 1	2.2 V, 3.0 V		27		ms
		UCCLTOx = 2			30		
		UCCLTOx = 3			33		

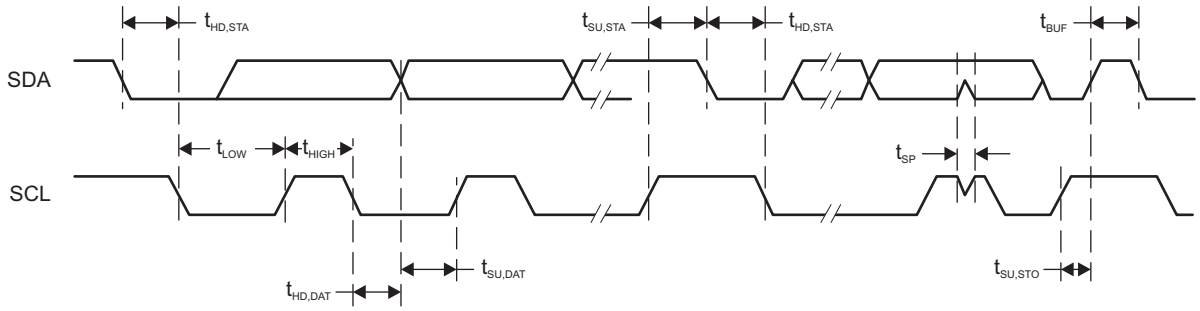

Figure 5-18. I²C Mode Timing

5.12.8 ADC12

Table 5-22 lists the power supply and input range conditions for the ADC.

Table 5-22. 12-Bit ADC, Power Supply and Input Range Conditions

over recommended ranges of supply voltage and operating free-air temperature (unless otherwise noted)

PARAMETER		TEST CONDITIONS	V_{CC}	MIN	NOM	MAX	UNIT
V(Ax)	Analog input voltage (1)	All ADC12 analog input pins Ax		0		AVCC	V
I(ADC12_B) single-ended mode	Operating supply current into AVCC plus DVCC terminal (2) (3)	$f_{ADC12CLK}$ = MODCLK, ADC12ON = 1, ADC12PWRMD = 0, ADC12DIF = 0 REFON = 0, ADC12SHTx = 0, ADC12DIV = 0	3.0 V		145	199	µA
			2.2 V		140	190	
I(ADC12_B) differential mode	Operating supply current into AVCC and DVCC terminals (2) (3)	$f_{ADC12CLK}$ = MODCLK, ADC12ON = 1, ADC12PWRMD = 0, ADC12DIF = 1 REFON = 0, ADC12SHTx = 0, ADC12DIV = 0	3.0 V		175	245	µA
			2.2 V		170	230	
C_I	Input capacitance	Only one terminal Ax can be selected at one time	2.2 V		10	15	pF
R_I	Input MUX ON resistance	0 V ≤ V(Ax) ≤ AVCC	>2 V		0.5	4	kΩ
			<2 V		1	10	

(1) The analog input voltage range must be within the selected reference voltage range V_{R+} to V_{R-} for valid conversion results.
(2) The internal reference supply current is not included in current consumption parameter I(ADC12_B).
(3) Typically about 60% of the total current into the AVCC and DVCC terminal is from AVCC.

Table 5-23 lists the timing parameter for the ADC.

Table 5-23. 12-Bit ADC, Timing Parameters

over recommended ranges of supply voltage and operating free-air temperature (unless otherwise noted)

PARAMETER		TEST CONDITIONS	MIN	TYP	MAX	UNIT
$f_{ADC12CLK}$	Specified performance	For specified performance of ADC12 linearity parameters with ADC12PWRMD = 0, If ADC12PWRMD = 1, the maximum is 1/4 of the value shown here	0.45		5.4	MHz
$f_{ADC12CLK}$	Reduced performance	Linearity parameters have reduced performance		32.768		kHz
$f_{ADC12OSC}$	Internal oscillator (1)	ADC12DIV = 0, $f_{ADC12CLK}$ = $f_{ADC12OSC}$ from MODCLK	4	4.8	5.4	MHz
$t_{CONVERT}$	Conversion time	REFON = 0, Internal oscillator, $f_{ADC12CLK}$ = $f_{ADC12OSC}$ from MODCLK, ADC12WINC = 0	2.6		3.5	µs
		External $f_{ADC12CLK}$ from ACLK, MCLK, or SMCLK, ADC12SSEL ≠ 0		(2)		
$t_{ADC12ON}$	Turnon settling time of the ADC	See (3)			100	ns
$t_{ADC12OFF}$	Time ADC must be off before can be turned on again	$t_{ADC12OFF}$ must be met to make sure $t_{ADC12ON}$ time holds	100			ns

(1) The ADC12OSC is sourced directly from MODOSC inside the UCS.
(2) 14 × 1 / $f_{ADC12CLK}$. If ADC12WINC = 1, then 15 × 1 / $f_{ADC12CLK}$

(3) The condition is that the error in a conversion started after $t_{ADC12ON}$ is less than ±0.5 LSB. The reference and input signals are already settled.

Copyright © 2015–2018, Texas Instruments Incorporated

Table 5-23. 12-Bit ADC, Timing Parameters (continued)

over recommended ranges of supply voltage and operating free-air temperature (unless otherwise noted)

PARAMETER		TEST CONDITIONS		MIN	TYP	MAX	UNIT
t_{Sample}	Sampling time	R_S = 400 Ω, R_I = 4 kΩ, C_I = 15 pF, C_{pext}= 8 pF (4)	All pulse sample mode (ADC12SHP = 1) and extended sample mode (ADC12SHP = 0) with buffered reference (ADC12 VRSEL = 0x1, 0x3, 0x5, 0x7, 0x9, 0xB, 0xD, 0xF)	1			µs
			Extended sample mode (ADC12SHP = 0) with unbuffered reference (ADC12 VRSEL= 0x0, 0x2, 0x4, 0x6, 0xC, 0xE)	(5)			µs

(4) Approximately 10 Tau (τ) are needed to get an error of less than ±0.5 LSB: $t_{sample} = \ln(2^{n+2}) \times (R_S + R_I) \times (C_I + C_{pext})$, R_S < 10 kΩ, where n = ADC resolution = 12, R_S= external source resistance, C_{pext} = external parasitic capacitance.
(5) $6 \times (1 / f_{ADC12CLK})$

Table 5-24 lists the linearity parameters of the ADC when using an external reference.

Table 5-24. 12-Bit ADC, Linearity Parameters With External Reference (1)

over recommended ranges of supply voltage and operating free-air temperature (unless otherwise noted)

PARAMETER		TEST CONDITIONS	MIN	TYP	MAX	UNIT
Resolution	Number of no missing code output-code bits		12			bits
E_I	Integral linearity error (INL) for differential input	1.2 V ≤ V_{R+} – $V_{R–}$ ≤ AV_{CC}			±1.8	LSB
E_I	Integral linearity error (INL) for single ended inputs	1.2 V ≤ V_{R+} – $V_{R–}$ ≤ AV_{CC}			±2.2	LSB
E_D	Differential linearity error (DNL)		–0.99		+1.0	LSB
E_O	Offset error (2) (3)	ADC12 VRSEL = 0x2 or 0x4 without TLV calibration, TLV calibration data can be used to improve the parameter (4)		±0.5	±1.5	mV
$E_{G,ext}$	Gain error	With external voltage reference without internal buffer (ADC12 VRSEL = 0x2 or 0x4) without TLV calibration, TLV calibration data can be used to improve the parameter (4), V_{R+} = 2.5 V, $V_{R–}$ = AVSS		±0.8	±2.5	LSB
		With external voltage reference with internal buffer (ADC12 VRSEL = 0x3), V_{R+} = 2.5 V, $V_{R–}$ = AVSS		±1	±20	
$E_{T,ext}$	Total unadjusted error	With external voltage reference without internal buffer (ADC12 VRSEL = 0x2 or 0x4) without TLV calibration, TLV calibration data can be used to improve the parameter (4), V_{R+} = 2.5 V, $V_{R–}$ = AVSS		±1.4	±3.5	LSB
		With external voltage reference with internal buffer (ADC12 VRSEL = 0x3), V_{R+} = 2.5 V, $V_{R–}$ = AVSS		±1.4	±21.0	

(1) See Table 5-26 and Table 5-32 for more information on internal reference performance and see *Designing With the MSP430FR58xx, FR59xx, FR68xx, and FR69xx ADC* for details on optimizing ADC performance for your application with the choice of internal versus external reference.
(2) Offset is measured as the input voltage (at which ADC output transitions from 0 to 1) minus 0.5 LSB.
(3) Offset increases as I_R drop increases when $V_{R–}$ is AVSS.
(4) For details, see the device descriptor table section in the *MSP430FR58xx, MSP430FR59xx, and MSP430FR6xx Family User's Guide*.

Table 5-25 lists the differential dynamic performance characteristics of the ADC with an external reference.

Table 5-25. 12-Bit ADC, Dynamic Performance for Differential Inputs With External Reference(1)

over recommended ranges of supply voltage and operating free-air temperature (unless otherwise noted)

PARAMETER		TEST CONDITIONS	MIN	TYP	MAX	UNIT
SNR	Signal-to-noise ratio	V_{R+} = 2.5 V, V_{R-} = AVSS	68	71		dB
ENOB	Effective number of bits(2)	V_{R+} = 2.5 V, V_{R-} = AVSS	10.7	11.2		bits

(1) See Table 5-26 and Table 5-32 for more information on internal reference performance and see *Designing With the MSP430FR58xx, FR59xx, FR68xx, and FR69xx ADC* for details on optimizing ADC performance for your application with the choice of internal versus external reference.
(2) ENOB = (SINAD – 1.76) / 6.02

Table 5-26 lists the differential dynamic performance characteristics of the ADC with an internal reference.

Table 5-26. 12-Bit ADC, Dynamic Performance for Differential Inputs With Internal Reference(1)

over recommended ranges of supply voltage and operating free-air temperature (unless otherwise noted)

PARAMETER		TEST CONDITIONS	MIN	TYP	MAX	UNIT
ENOB	Effective number of bits(2)	V_{R+} = 2.5V, V_{R-} = AVSS	10.3	10.7		Bits

(1) See Table 5-32 for more information on internal reference performance and see *Designing With the MSP430FR58xx, FR59xx, FR68xx, and FR69xx ADC* for details on optimizing ADC performance for your application with the choice of internal versus external reference.
(2) ENOB = (SINAD – 1.76) / 6.02

Table 5-27 lists the single-ended dynamic performance characteristics of the ADC with an external reference.

Table 5-27. 12-Bit ADC, Dynamic Performance for Single-Ended Inputs With External Reference(1)

over recommended ranges of supply voltage and operating free-air temperature (unless otherwise noted)

PARAMETER		TEST CONDITIONS	MIN	TYP	MAX	UNIT
SNR	Signal-to-noise ratio	V_{R+} = 2.5 V, V_{R-} = AVSS	64	68		dB
ENOB	Effective number of bits(2)	V_{R+} = 2.5 V, V_{R-} = AVSS	10.2	10.7		bits

(1) See Table 5-28 and Table 5-32 for more information on internal reference performance and see *Designing With the MSP430FR58xx, FR59xx, FR68xx, and FR69xx ADC* for details on optimizing ADC performance for your application with the choice of internal versus external reference.
(2) ENOB = (SINAD – 1.76) / 6.02

Table 5-28 lists the single-ended dynamic performance characteristics of the ADC with an internal reference.

Table 5-28. 12-Bit ADC, Dynamic Performance for Single-Ended Inputs With Internal Reference(1)

over recommended ranges of supply voltage and operating free-air temperature (unless otherwise noted)

PARAMETER		TEST CONDITIONS	MIN	TYP	MAX	UNIT
ENOB	Effective number of bits(2)	V_{R+} = 2.5 V, V_{R-} = AVSS	9.4	10.4		bits

(1) See Table 5-32 for more information on internal reference performance and see *Designing With the MSP430FR58xx, FR59xx, FR68xx, and FR69xx ADC* for details on optimizing ADC performance for your application with the choice of internal versus external reference.
(2) ENOB = (SINAD – 1.76) / 6.02

Table 5-29 lists the dynamic performance characteristics of the ADC with using a 32.768-kHz clock.

Table 5-29. 12-Bit ADC, Dynamic Performance With 32.768-kHz Clock

over recommended ranges of supply voltage and operating free-air temperature (unless otherwise noted)

PARAMETER		TEST CONDITIONS	MIN	TYP	MAX	UNIT
ENOB	Effective number of bits(1)	Reduced performance with $f_{ADC12CLK}$ from ACLK LFXT at 32.768 kHz, V_{R+} = 2.5 V, V_{R-} = AVSS		10		bits

(1) ENOB = (SINAD – 1.76) / 6.02

Copyright © 2015–2018, Texas Instruments Incorporated

Table 5-30 lists the temperature sensor and built-in $V_{1/2}$ characteristics.

Table 5-30. 12-Bit ADC, Temperature Sensor and Built-In $V_{1/2}$

over recommended ranges of supply voltage and operating free-air temperature (unless otherwise noted)

PARAMETER		TEST CONDITIONS	V_{CC}	MIN	TYP	MAX	UNIT
V_{SENSOR}	See (1) (2)	ADC12ON = 1, ADC12TCMAP = 1, T_A = 0°C (see Figure 5-19)			700		mV
TC_{SENSOR}	See (2)	ADC12ON = 1, ADC12TCMAP = 1			2.5		mV/°C
$t_{SENSOR(sample)}$	Sample time required if ADCTCMAP = 1 and channel (MAX – 1) is selected(3)	ADC12ON = 1, ADC12TCMAP = 1, Error of conversion result ≤ 1 LSB		30			µs
$V_{1/2}$	AVCC voltage divider for ADC12BATMAP = 1 on MAX input channel	ADC12ON = 1, ADC12BATMAP = 1		47.5%	50%	52.5%	
$I_{V\ 1/2}$	current for battery monitor during sample time	ADC12ON = 1, ADC12BATMAP = 1			38	72	µA
$t_{V\ 1/2\ (sample)}$	Sample time required if ADC12BATMAP = 1 and channel MAX is selected(4)	ADC12ON = 1, ADC12BATMAP = 1		1.7			µs

(1) The temperature sensor offset can be as much as ±30°C. TI recommends a single-point calibration to minimize the offset error of the built-in temperature sensor.
(2) The device descriptor structure contains calibration values for 30°C ±3°C and 85°C ±3°C for each of the available reference voltage levels. The sensor voltage can be computed as $V_{SENSE} = TC_{SENSOR}$ * (Temperature, °C) + V_{SENSOR}, where TC_{SENSOR} and V_{SENSOR} can be computed from the calibration values for higher accuracy.
(3) The typical equivalent impedance of the sensor is 250 kΩ. The sample time required includes the sensor on-time $t_{SENSOR(on)}$.
(4) The on-time $t_{V\ 1/2(on)}$ is included in the sampling time $t_{V\ 1/2\ (sample)}$; no additional on time is needed.

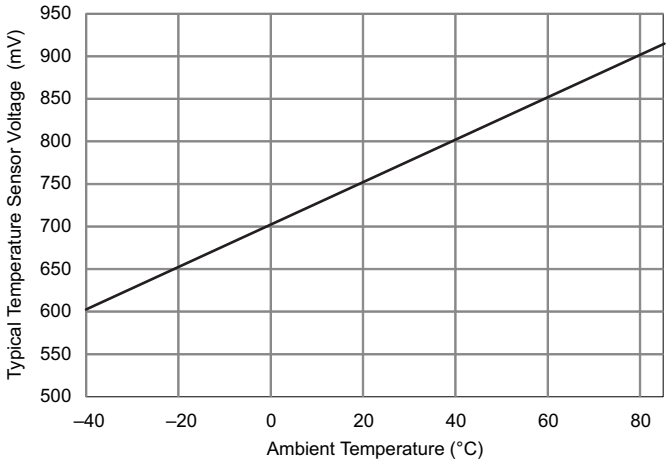

Figure 5-19. Typical Temperature Sensor Voltage

Table 5-31 lists the external reference characteristics of the ADC.

Table 5-31. 12-Bit ADC, External Reference(1)

over recommended ranges of supply voltage and operating free-air temperature (unless otherwise noted)

PARAMETER		TEST CONDITIONS	MIN	MAX	UNIT
V_{R+}	Positive external reference voltage input VeREF+ or VeREF- based on ADC12 VRSEL bit	$V_{R+} > V_{R-}$	1.2	AV_{CC}	V
V_{R-}	Negative external reference voltage input VeREF+ or VeREF- based on ADC12 VRSEL bit	$V_{R+} > V_{R-}$	0	1.2	V
$(V_{R+} - V_{R-})$	Differential external reference voltage input	$V_{R+} > V_{R-}$	1.2	AV_{CC}	V
I_{VeREF+} I_{VeREF-}	Static input current singled ended input mode	1.2 V ≤ V_{eREF+} ≤ V_{AVCC}, V_{eREF-} = 0 V $f_{ADC12CLK}$ = 5 MHz, ADC12SHTx = 1h, ADC12DIF = 0, ADC12PWRMD = 0		±10	µA
		1.2 V ≤ V_{eREF+} ≤ V_{AVCC} , V_{eREF-} = 0 V $f_{ADC12CLK}$ = 5 MHz, ADC12SHTx = 8h, ADC12DIF = 0, ADC12PWRMD = 01		±2.5	
I_{VeREF+} I_{VeREF-}	Static input current differential input mode	1.2 V ≤ V_{eREF+} ≤ V_{AVCC}, V_{eREF-} = 0 V $f_{ADC12CLK}$ = 5 MHz, ADC12SHTx = 1h, ADC12DIF = 1, ADC12PWRMD = 0		±20	uA
		1.2 V ≤ V_{eREF+} ≤ V_{AVCC} , V_{eREF-} = 0 V $f_{ADC12CLK}$ = 5 MHz, ADC12SHTx = 8h, ADC12DIF = 1, ADC12PWRMD = 1		±5	
I_{VeREF+}	Peak input current with single ended input	0 V ≤ V_{eREF+} ≤ V_{AVCC}, ADC12DIF = 0		1.5	mA
I_{VeREF+}	Peak input current with differential input	0 V ≤ V_{eREF+} ≤ V_{AVCC}, ADC12DIF = 1		3	mA
$C_{VeREF+/-}$	Capacitance at VeREF+ or VeREF- terminal	See (2)	10		µF

(1) The external reference is used during ADC conversion to charge and discharge the capacitance array. The input capacitance, C_I, is also the dynamic load for an external reference during conversion. The dynamic impedance of the reference supply should follow the recommendations on analog-source impedance to allow the charge to settle for 12-bit accuracy.

(2) Two decoupling capacitors, 10 µF and 470 nF, should be connected to VeREF to decouple the dynamic current required for an external reference source if it is used for the ADC12_B. See also the *MSP430FR58xx, MSP430FR59xx, and MSP430FR6xx Family User's Guide*.

Copyright © 2015–2018, Texas Instruments Incorporated

5.12.9 REF Module

Table 5-32 lists the characteristics of the built-in voltage reference.

Table 5-32. REF, Built-In Reference

over recommended ranges of supply voltage and operating free-air temperature (unless otherwise noted)

PARAMETER		TEST CONDITIONS	V_{CC}	MIN	TYP	MAX	UNIT
V_{REF+}	Positive built-in reference voltage output	REFVSEL = {2} for 2.5 V, REFON = 1	2.7 V		2.5	±1.5%	V
		REFVSEL = {1} for 2.0 V, REFON = 1	2.2 V		2.0	±1.5%	
		REFVSEL = {0} for 1.2 V, REFON = 1	1.8 V		1.2	±1.8%	
Noise	RMS noise at VREF(1)	From 0.1 Hz to 10 Hz, REFVSEL = {0}			110	600	µV
$V_{OS_BUF_INT}$	VREF ADC BUF_INT buffer offset(2)	T_A = 25°C , ADC ON, REFVSEL = {0}, REFON = 1, REFOUT = 0		–12		+12	mV
$V_{OS_BUF_EXT}$	VREF ADC BUF_EXT buffer offset(2)	T_A = 25°C, REFVSEL = {0} , REFOUT = 1, REFON = 1 or ADC ON		–12		+12	mV
$AV_{CC(min)}$	AVCC minimum voltage, Positive built-in reference active	REFVSEL = {0} for 1.2 V		1.8			V
		REFVSEL = {1} for 2.0 V		2.2			
		REFVSEL = {2} for 2.5 V		2.7			
I_{REF+}	Operating supply current into AVCC terminal(3)	REFON = 1	3 V		8	15	µA
$I_{REF+_ADC_BUF}$	Operating supply current into AVCC terminal(3)	ADC ON, REFOUT = 0, REFVSEL = {0, 1, 2}, ADC12PWRMD = 0,	3 V		225	355	µA
		ADC ON, REFOUT = 1, REFVSEL = {0, 1, 2}, ADC12PWRMD = 0			1030	1660	
		ADC ON, REFOUT = 0, REFVSEL = {0, 1, 2}, ADC12PWRMD = 1			120	185	
		ADC ON, REFOUT = 1, REFVSEL = {0, 1, 2}, ADC12PWRMD = 1			545	895	
		ADC OFF, REFON = 1, REFOUT = 1, REFVSEL = {0, 1, 2}			1085	1780	
$I_{O(VREF+)}$	VREF maximum load current, VREF+ terminal	REFVSEL = {0, 1, 2}, AVCC = AVCC(min) for each reference level, REFON = REFOUT = 1		–1000		+10	µA
ΔVout/ΔIo (VREF+)	Load-current regulation, VREF+ terminal	REFVSEL = {0, 1, 2}, $I_{O(VREF+)}$ = +10 µA or –1000 µA, AV_{CC} = $AV_{CC(min)}$ for each reference level, REFON = REFOUT = 1				2500	µV/mA
$C_{VREF+/-}$	Capacitance at VREF+ and VREF- terminals	REFON = REFOUT = 1		0		100	pF
TC_{REF+}	Temperature coefficient of built-in reference	REFVSEL = {0, 1, 2}, REFON = REFOUT = 1, T_A = –40°C to 85°C(4)			18	50	ppm/K
PSRR_DC	Power supply rejection ratio (DC)	AV_{CC} = $AV_{CC(min)}$ to $AV_{CC(max)}$, T_A = 25°C, REFVSEL = {0, 1, 2}, REFON = REFOUT = 1			120	400	µV/V
PSRR_AC	Power supply rejection ratio (AC)	dAV_{CC}= 0.1 V at 1 kHz			3.0		mV/V
t_{SETTLE}	Settling time of reference voltage(5)	AV_{CC} = $AV_{CC\ (min)}$ to $AV_{CC(max)}$, REFVSEL = {0, 1, 2}, REFON = 0 → 1			75	80	µs

(1) Internal reference noise affects ADC performance when ADC uses internal reference. See *Designing With the MSP430FR59xx and MSP430FR58xx ADC* for details on optimizing ADC performance for your application with the choice of internal versus external reference.
(2) Buffer offset affects ADC gain error and thus total unadjusted error.
(3) The internal reference current is supplied through the AVCC terminal.
(4) Calculated using the box method: (MAX(–40°C to 85°C) – MIN(–40°C to 85°C)) / MIN(–40°C to 85°C)/(85°C – (–40°C)).
(5) The condition is that the error in a conversion started after t_{REFON} is less than ±0.5 LSB.

5.12.10 Comparator

Table 5-33 lists the characteristics of the comparator.

Table 5-33. Comparator_E

over recommended ranges of supply voltage and operating free-air temperature (unless otherwise noted)

PARAMETER		TEST CONDITIONS	V_{CC}	MIN	TYP	MAX	UNIT
I_{AVCC_COMP}	Comparator operating supply current into AVCC, excludes reference resistor ladder	CEPWRMD = 00, CEON = 1, CERSx = 00 (fast)	2.2 V, 3.0 V		11	20	µA
		CEPWRMD = 01, CEON = 1, CERSx = 00 (medium)			9	17	
		CEPWRMD = 10, CEON = 1, CERSx = 00 (slow), T_A = 30°C				0.5	
		CEPWRMD = 10, CEON = 1, CERSx = 00 (slow), T_A = 85°C				1.3	
I_{AVCC_REF}	Quiescent current of resistor ladder into AVCC, including REF module current	CEREFLx = 01, CERSx = 10, REFON = 0, CEON = 0, CEREFACC = 0	2.2 V, 3.0 V		12	15	µA
		CEREFLx = 01, CERSx = 10, REFON = 0, CEON = 0, CEREFACC = 1			5	7	
V_{REF}	Reference voltage level	CERSx = 11, CEREFLx = 01, CEREFACC = 0	1.8 V	1.17	1.2	1.23	V
		CERSx = 11, CEREFLx = 10, CEREFACC = 0	2.2 V	1.92	2.0	2.08	
		CERSx = 11, CEREFLx = 11, CEREFACC = 0	2.7 V	2.40	2.5	2.60	
		CERSx = 11, CEREFLx = 01, CEREFACC = 1	1.8 V	1.10	1.2	1.245	
		CERSx = 11, CEREFLx = 10, CEREFACC = 1	2.2 V	1.90	2.0	2.08	
		CERSx = 11, CEREFLx = 11, CEREFACC = 1	2.7 V	2.35	2.5	2.60	
V_{IC}	Common-mode input range			0		V_{CC} – 1	V
V_{OFFSET}	Input offset voltage	CEPWRMD = 00		–32		32	mV
		CEPWRMD = 01		–32		32	
		CEPWRMD = 10		–30		30	
C_{IN}	Input capacitance	CEPWRMD = 00 or CEPWRMD = 01			9		pF
		CEPWRMD = 10			9		
R_{SIN}	Series input resistance	On (switch closed)			1	3	kΩ
		Off (switch open)		50			MΩ
t_{PD}	Propagation delay, response time	CEPWRMD = 00, CEF = 0, Overdrive ≥ 20 mV			260	330	ns
		CEPWRMD = 01, CEF = 0, Overdrive ≥ 20 mV			350	460	
		CEPWRMD = 10, CEF = 0, Overdrive ≥ 20 mV				15	µs
$t_{PD,filter}$	Propagation delay with filter active	CEPWRMD = 00 or 01, CEF = 1, Overdrive ≥ 20 mV, CEFDLY = 00			700	1000	ns
		CEPWRMD = 00 or 01, CEF = 1, Overdrive ≥ 20 mV, CEFDLY = 01			1.0	1.8	µs
		CEPWRMD = 00 or 01, CEF = 1, Overdrive ≥ 20 mV, CEFDLY = 10			2.0	3.5	
		CEPWRMD = 00 or 01, CEF = 1, Overdrive ≥ 20 mV, CEFDLY = 11			4.0	7.0	
t_{EN_CMP}	Comparator enable time	CEON = 0 → 1, VIN+, VIN- from pins, Overdrive ≥ 20 mV, CEPWRMD = 00			0.9	1.5	µs
		CEON = 0 → 1, VIN+, VIN- from pins, Overdrive ≥ 20 mV, CEPWRMD = 01			0.9	1.5	
		CEON = 0 → 1, VIN+, VIN- from pins, Overdrive ≥ 20 mV, CEPWRMD = 10			15	100	
$t_{EN_CMP_VREF}$	Comparator and reference ladder and reference voltage enable time	CEON = 0 → 1, CEREFLX = 10, CERSx = 10 or 11, CEREF0 = CEREF1 = 0x0F, Overdrive ≥ 20 mV			350	1500	µs
V_{CE_REF}	Reference voltage for a given tap	VIN = reference into resistor ladder, n = 0 to 31		VIN × (n + 0.5) / 32	VIN × (n + 1) / 32	VIN × (n + 1.5) / 32	V

Copyright © 2015–2018, Texas Instruments Incorporated

5.12.11 FRAM Controller

Table 5-34 lists the characteristics of the FRAM.

Table 5-34. FRAM

over recommended ranges of supply voltage and operating free-air temperature (unless otherwise noted)

PARAMETER		TEST CONDITIONS	MIN	TYP	MAX	UNIT
	Read and write endurance		10^{15}			cycles
$t_{Retention}$	Data retention duration	T_J = 25°C	100			years
		T_J = 70°C	40			
		T_J = 85°C	10			
I_{WRITE}	Current to write into FRAM			I_{READ} (1)		nA
I_{ERASE}	Erase current			N/A (2)		nA
t_{WRITE}	Write time			t_{READ} (3)		ns
t_{READ}	Read time, NWAITSx = 0			1 / f_{SYSTEM} (4)		ns
	Read time, NWAITSx = 1			2 / f_{SYSTEM} (4)		

(1) Writing to FRAM does not require a setup sequence or additional power when compared to reading from FRAM. The FRAM read current I_{READ} is included in the active mode current consumption numbers $I_{AM,FRAM}$.
(2) N/A = not applicable. FRAM does not require a special erase sequence.
(3) Writing into FRAM is as fast as reading.
(4) The maximum read (and write) speed is specified by f_{SYSTEM} using the appropriate wait state settings (NWAITSx).

5.12.12 Emulation and Debug

Table 5-35 lists the characteristics of the JTAG and Spy-Bi-Wire interface.

Table 5-35. JTAG and Spy-Bi-Wire Interface

over recommended ranges of supply voltage and operating free-air temperature (unless otherwise noted)

PARAMETER		TEST CONDITIONS	MIN	TYP	MAX	UNIT
I_{JTAG}	Supply current adder when JTAG active (but not clocked)	2.2 V, 3.0 V		40	100	µA
f_{SBW}	Spy-Bi-Wire input frequency	2.2 V, 3.0 V	0		10	MHz
$t_{SBW,Low}$	Spy-Bi-Wire low clock pulse duration	2.2 V, 3.0 V	0.04		15	µs
$t_{SBW, En}$	Spy-Bi-Wire enable time (TEST high to acceptance of first clock edge) (1)	2.2 V, 3.0 V			110	µs
$t_{SBW,Rst}$	Spy-Bi-Wire return to normal operation time		15		100	µs
f_{TCK}	TCK input frequency, 4-wire JTAG (2)	2.2 V	0		16	MHz
		3.0 V	0		16	MHz
$R_{internal}$	Internal pulldown resistance on TEST	2.2 V, 3.0 V	20	35	50	kΩ
f_{TCLK}	TCLK/MCLK frequency during JTAG access, no FRAM access (limited by f_{SYSTEM})				16	MHz
$t_{TCLK,Low/High}$	TCLK low or high clock pulse duration, no FRAM access				25	ns
$f_{TCLK,FRAM}$	TCLK/MCLK frequency during JTAG access, including FRAM access (limited by f_{SYSTEM} with no FRAM wait states)				4	MHz
$t_{TCLK,FRAM,Low/High}$	TCLK low or high clock pulse duration, including FRAM accesses				100	ns

(1) Tools that access the Spy-Bi-Wire and BSL interfaces must wait for the $t_{SBW,En}$ time after the first transition of the TEST/SBWTCK pin (low to high), before the second transition of the pin (high to low) during the entry sequence.
(2) f_{TCK} may be restricted to meet the timing requirements of the module selected.

6 Detailed Description

6.1 Overview

The Texas Instruments MSP430FR597x(1) and MSP430FR587x(1) family of ultra-low-power microcontrollers consists of several devices featuring different sets of peripherals. The architecture, combined with seven low-power modes is optimized to achieve extended battery life for example in portable measurement applications. The devices features a powerful 16-bit RISC CPU, 16-bit registers, and constant generators that contribute to maximum code efficiency. The devices are microcontroller configurations with up to five 16-bit timers, a comparator, eUSCIs that support UART, SPI, and I^2C, a hardware multiplier, an AES accelerator, DMA, an RTC module with alarm capabilities, up to 52 I/O pins, and a high-performance 12-bit ADC.

6.2 CPU

The MSP430 CPU has a 16-bit RISC architecture that is highly transparent to the application. All operations, other than program-flow instructions, are performed as register operations in conjunction with seven addressing modes for source operand and four addressing modes for destination operand.

The CPU is integrated with 16 registers that provide reduced instruction execution time. The register-to-register operation execution time is one cycle of the CPU clock.

Four of the registers, R0 to R3, are dedicated as program counter, stack pointer, status register, and constant generator, respectively. The remaining registers are general-purpose registers.

Peripherals are connected to the CPU using data, address, and control buses, and can be handled with all instructions.

The instruction set consists of the original 51 instructions with three formats and seven address modes and additional instructions for the expanded address range. Each instruction can operate on word and byte data. CPUxV2 can also operate on address-word data (20-bit).

Copyright © 2015–2018, Texas Instruments Incorporated

6.3 Operating Modes

The device has one active mode and seven software selectable low-power modes of operation (see Table 6-1). An interrupt event can wake up the device from low-power modes LPM0 to LPM4, service the request, and restore back to the low-power mode on return from the interrupt program. Low-power modes LPM3.5 and LPM4.5 disable the core supply to minimize power consumption.

Table 6-1. Operating Modes

MODE	AM		LPM0	LPM1	LPM2	LPM3	LPM4	LPM3.5	LPM4.5	
	Active	Active, FRAM Off (1)	CPU Off (2)	CPU Off	Standby	Standby	Off	RTC Only	Shutdown With SVS	Shutdown Without SVS
Maximum system clock	16 MHz		16 MHz	16 MHz	50 kHz	50 kHz	0 (3)	50 kHz	0 (3)	
Typical current consumption, 25°C	103 µA/MHz	65 µA/MHz	75 µA at 1 MHz	40 µA at 1 MHz	0.9 µA	0.4 µA	0.3 µA	0.35 µA	0.2 µA	0.02 µA
Typical wake-up time	N/A		instant.	6 µs	6 µs	7 µs	7 µs	250 µs	250 µs	1000 µs
Wake-up events	N/A		all	all	LF RTC I/O Comp	LF RTC I/O Comp	I/O Comp	RTC I/O	I/O	
CPU	**on**		off	off	off	off	off	reset	reset	
FRAM	**on**	off(1)	standby (or off (1))	off	off	off	off	off	off	
High-frequency peripherals	**available**		**available**	**available**	off	off	off	reset	reset	
Low-frequency peripherals	**available**		**available**	**available**	**available**	**available** (4)	off	RTC	reset	
Unclocked peripherals(5)	**available**		**available**	**available**	**available**	**available** (4)	**available** (4)	reset	reset	
MCLK	**on**		off	off	off	off	off	off	off	
SMCLK	opt. (6)		opt. (6)	opt. (6)	off	off	off	off	off	
ACLK	**on**		**on**	**on**	**on**	**on**	off	off	off	
Full retention	**yes**		**yes**	**yes**	**yes**	**yes** (7)	**yes** (7)	no	no	
SVS	always		always	always	optional(8)	optional(8)	optional(8)	optional(8)	on (9)	off (10)
Brownout	**always**		**always**	**always**	**always**	**always**	**always**	**always**	**always**	

(1) FRAM disabled in FRAM controller
(2) Disabling the FRAM through the FRAM controller decreases the LPM current consumption, but the wake-up time can increase. If the wakeup is for FRAM access (for example, to fetch an interrupt vector), wake-up time is increased. If the wakeup is for an operation that does not access FRAM (for example, DMA transfer to RAM), wake-up time is not increased.
(3) All clocks disabled
(4) See Section 6.3.2, which describes the use of peripherals in LPM3 and LPM4.
(5) "Unclocked peripherals" are peripherals that do not require a clock source to operate; for example, the comparator and REF, or the eUSCI when operated as an SPI slave.
(6) Controlled by SMCLKOFF
(7) Using the RAM Controller, the RAM can be completely powered down to save leakage; however, all data is lost.
(8) Activated SVS (SVSHE = 1) results in higher current consumption. SVS not included in typical current consumption.
(9) SVSHE = 1
(10) SVSHE = 0

Copyright © 2015–2018, Texas Instruments Incorporated

6.3.1 Peripherals in Low-Power Modes

Peripherals can be in different states that affect which power mode the device can enter. The states depend on the operational modes of the peripherals (see Table 6-2). The states are:

- A peripheral is in a "high-frequency state" if it requires or uses a clock with a "high" frequency of more than 50 kHz.
- A peripheral is in a "low-frequency state" if it requires or uses a clock with a "low" frequency of 50 kHz or less.
- A peripheral is in an "unclocked state" if it does not require or use an internal clock.

If the CPU requests a power mode that does not support the current state of all active peripherals, the device does not enter the requested power mode. The device instead enters a power mode that still supports the current state of the peripherals, except if an external clock is used. If an external clock is used, the application must use the correct frequency range for the requested power mode.

Table 6-2. Peripheral States

PERIPHERAL	IN HIGH-FREQUENCY STATE (1)	IN LOW-FREQUENCY STATE (2)	IN UNCLOCKED STATE (3)
WDT	Clocked by SMCLK	Clocked by ACLK	Not applicable
DMA (4)	Not applicable	Not applicable	Waiting for a trigger
RTC_C	Not applicable	Clocked by LFXT	Not applicable
Timer_A TAx	Clocked by SMCLK or clocked by external clock >50 kHz	Clocked by ACLK or clocked by external clock ≤50 kHz	Clocked by external clock ≤50 kHz
Timer_B TBx	Clocked by SMCLK or clocked by external clock >50 kHz	Clocked by ACLK or clocked by external clock ≤50 kHz	Clocked by external clock ≤50 kHz
eUSCI_Ax in UART mode	Clocked by SMCLK	Clocked by ACLK	Waiting for first edge of START bit.
eUSCI_Ax in SPI master mode	Clocked by SMCLK	Clocked by ACLK	Not applicable
eUSCI_Ax in SPI slave mode	Clocked by external clock >50 kHz	Clocked by external clock ≤50 kHz	Clocked by external clock ≤50 kHz
eUSCI_Bx in I^2C master mode	Clocked by SMCLK or clocked by external clock >50 kHz	Clocked by ACLK or clocked by external clock ≤50 kHz	Not applicable
eUSCI_Bx in I^2C slave mode	Clocked by external clock >50 kHz	Clocked by external clock ≤50 kHz	Waiting for START condition or clocked by external clock ≤50 kHz
eUSCI_Bx in SPI master mode	Clocked by SMCLK	Clocked by ACLK	Not applicable
eUSCI_Bx in SPI slave mode	Clocked by external clock >50 kHz	Clocked by external clock ≤50 kHz	Clocked by external clock ≤50 kHz
ADC12_B	Clocked by SMCLK or by MODOSC	Clocked by ACLK	Waiting for a trigger
REF_A	Not applicable	Not applicable	Always
COMP_E	Not applicable	Not applicable	Always
CRC (5)	Not applicable	Not applicable	Not applicable
MPY (5)	Not applicable	Not applicable	Not applicable
AES (5)	Not applicable	Not applicable	Not applicable

(1) Peripherals are in a state that requires or uses a clock with a "high" frequency of more than 50 kHz.
(2) Peripherals are in a state that requires or uses a clock with a "low" frequency of 50 kHz or less.
(3) Peripherals are in a state that does not require or does not use an internal clock.
(4) The DMA always transfers data in active mode but can wait for a trigger in any low-power mode. A DMA trigger during a low-power mode causes a temporary transition into active mode for the time of the transfer.
(5) This peripheral operates during active mode only and delays the transition into a low-power mode until its operation is completed.

Copyright © 2015–2018, Texas Instruments Incorporated

6.3.2 Idle Currents of Peripherals in LPM3 and LPM4

Most peripherals can be activated to be operational in LPM3 if clocked by ACLK. Some modules are even operational in LPM4 because they do not require a clock to operate (for example, the comparator). Activating a peripheral in LPM3 or LPM4 increases the current consumption due to its active supply current contribution but also due to an additional idle current. To limit the idle current adder, certain peripherals are group together. To achieve optimal current consumption, try to use modules within one group and to limit the number of groups with active modules. Table 6-3 lists the grouping. Modules not listed in this table are either already included in the standard LPM3 current consumption specifications or cannot be used in LPM3 or LPM4.

The idle current adder is very small at room temperature (25°C) but increases at high temperatures (85°C); see the I_{IDLE} current parameters in Section 5.7 for details.

Table 6-3. Peripheral Groups

Group A	Group B	Group C
Timer TA0	Timer TA2	Timer TA3
Timer TA1	Timer B0	eUSCI_A1
Comparator	eUSCI_A0	
ADC12_B	eUSCI_B0	
REF_A	eUSCI_B1	

6.4 Interrupt Vector Table and Signatures

The interrupt vectors, the power-up start address, and signatures are in the address range 0FFFFh to 0FF80h. Table 6-4 summarizes the content of this address range.

The power-up start address or reset vector is at 0FFFFh to 0FFFEh. It contains the 16-bit address pointing to the start address of the application program.

The interrupt vectors start at 0FFFDh extending to lower addresses. Each vector contains the 16-bit address of the appropriate interrupt-handler instruction sequence.

The vectors programmed into the address range from 0FFFFh to 0FFE0h are used as BSL password (if enabled by the corresponding signature)

The signatures are at 0FF80h extending to higher addresses. Signatures are evaluated during device start-up. Starting from address 0FF88h extending to higher addresses a JTAG password can programmed. The password can extend into the interrupt vector locations using the interrupt vector addresses as additional bits for the password.

See the chapter *System Resets, Interrupts, and Operating Modes, System Control Module (SYS)* in the *MSP430FR58xx, MSP430FR59xx, and MSP430FR6xx Family User's Guide* for details.

Table 6-4. Interrupt Sources, Flags, Vectors, and Signatures

INTERRUPT SOURCE	INTERRUPT FLAG	SYSTEM INTERRUPT	WORD ADDRESS	PRIORITY
System Reset Power-up, Brownout, Supply Supervisor External Reset $\overline{RST}$ Watchdog time-out (watchdog mode) WDT, FRCTL MPU, CS, PMM password violation FRAM uncorrectable bit error detection FRAM access time error MPU segment violation Software POR, BOR	SVSHIFG PMMRSTIFG WDTIFG WDTPW, FRCTLPW, MPUPW, CSPW, PMMPW UBDIFG ACCTEIFG MPUSEGIIFG, MPUSEG1IFG, MPUSEG2IFG, MPUSEG3IFG PMMPORIFG, PMMBORIFG (SYSRSTIV) (1) (2)	Reset	0FFFEh	Highest
System NMI Vacant memory access JTAG mailbox FRAM bit error detection MPU segment violation	VMAIFG JMBNIFG, JMBOUTIFG CBDIFG, UBDIFG MPUSEGIIFG, MPUSEG1IFG, MPUSEG2IFG, MPUSEG3IFG (SYSSNIV) (1) (3)	(Non)maskable	0FFFCh	
User NMI External NMI Oscillator Fault	NMIIFG, OFIFG (SYSUNIV) (1) (3)	(Non)maskable	0FFFAh	
Comparator_E	Comparator_E interrupt flags (CEIV) (1)	Maskable	0FFF8h	
Timer_B TB0	TB0CCR0.CCIFG	Maskable	0FFF6h	
Timer_B TB0	TB0CCR1.CCIFG to TB0CCR6.CCIFG, TB0CTL.TBIFG (TB0IV) (1)	Maskable	0FFF4h	
Watchdog Timer (Interval Timer Mode)	WDTIFG	Maskable	0FFF2h	
Reserved	Reserved	Maskable	0FFF0h	
eUSCI_A0 Receive or Transmit	UCA0IFG: UCRXIFG, UCTXIFG (SPI mode) UCA0IFG:UCSTTIFG, UCTXCPTIFG, UCRXIFG, UCTXIFG (UART mode) (UCA0IV) (1)	Maskable	0FFEEh	
eUSCI_B0 Receive or Transmit	UCB0IFG: UCRXIFG, UCTXIFG (SPI mode) UCB0IFG: UCALIFG, UCNACKIFG, UCSTTIFG, UCSTPIFG, UCRXIFG0, UCTXIFG0, UCRXIFG1, UCTXIFG1, UCRXIFG2, UCTXIFG2, UCRXIFG3, UCTXIFG3, UCCNTIFG, UCBIT9IFG (I^2C mode) (UCB0IV) (1)	Maskable	0FFECh	
ADC12_B	ADC12IFG0 to ADC12IFG31 ADC12LOIFG, ADC12INIFG, ADC12HIIFG, ADC12RDYIFG, ADC12OVIFG, ADC12TOVIFG (ADC12IV) (1) (4)	Maskable	0FFEAh	
Timer_A TA0	TA0CCR0.CCIFG	Maskable	0FFE8h	
Timer_A TA0	TA0CCR1.CCIFG to TA0CCR2.CCIFG, TA0CTL.TAIFG (TA0IV) (1)	Maskable	0FFE6h	
eUSCI_A1 receive or transmit	UCA1IFG:UCRXIFG, UCTXIFG (SPI mode) UCA1IFG:UCSTTIFG, UCTXCPTIFG, UCRXIFG, UCTXIFG (UART mode) (UCA1IV) (1)	Maskable	0FFE4h	

(1) Multiple source flags
(2) A reset is generated if the CPU tries to fetch instructions from within peripheral space
(3) (Non)maskable: the individual interrupt-enable bit can disable an interrupt event, but the general-interrupt enable cannot disable it.
(4) Only on devices with ADC, otherwise reserved.

Copyright © 2015–2018, Texas Instruments Incorporated

Table 6-4. Interrupt Sources, Flags, Vectors, and Signatures (continued)

INTERRUPT SOURCE	INTERRUPT FLAG	SYSTEM INTERRUPT	WORD ADDRESS	PRIORITY
eUSCI_B1 receive or transmit (Reserved on MSP430FR592x)	UCB1IFG: UCRXIFG, UCTXIFG (SPI mode) UCB1IFG: UCALIFG, UCNACKIFG, UCSTTIFG, UCSTPIFG, UCRXIFG0, UCTXIFG0, UCRXIFG1, UCTXIFG1, UCRXIFG2, UCTXIFG2, UCRXIFG3, UCTXIFG3, UCCNTIFG, UCBIT9IFG (I^2C mode) (UCB1IV)(1)	Maskable	0FFE2h	
DMA	DMA0CTL.DMAIFG, DMA1CTL.DMAIFG, DMA2CTL.DMAIFG (DMAIV)(1)	Maskable	0FFE0h	
Timer_A TA1	TA1CCR0.CCIFG	Maskable	0FFDEh	
Timer_A TA1	TA1CCR1.CCIFG to TA1CCR2.CCIFG, TA1CTL.TAIFG (TA1IV)(1)	Maskable	0FFDCh	
I/O Port P1	P1IFG.0 to P1IFG.7 (P1IV)(1)	Maskable	0FFDAh	
Timer_A TA2	TA2CCR0.CCIFG	Maskable	0FFD8h	
Timer_A TA2	TA2CCR1.CCIFG TA2CTL.TAIFG (TA2IV)(1)	Maskable	0FFD6h	
I/O Port P2	P2IFG.0 to P2IFG.3 (P2IV) (1)	Maskable	0FFD4h	
Timer_A TA3	TA3CCR0.CCIFG	Maskable	0FFD2h	
Timer_A TA3	TA3CCR1.CCIFG TA3CTL.TAIFG (TA3IV)(1)	Maskable	0FFD0h	
I/O Port P3	P3IFG.0 to P3IFG.7 (P3IV) (1)	Maskable	0FFCEh	
I/O Port P4	P4IFG.2 to P4IFG.7 (P4IV) (1)	Maskable	0FFCCh	
Reserved			0FFCAh	
RTC_C	RTCRDYIFG, RTCTEVIFG, RTCAIFG, RT0PSIFG, RT1PSIFG, RTCOFIFG (RTCIV) (1)	Maskable	0FFC8h	
AES	AESRDYIFG	Maskable	0FFC6h	Lowest
Reserved	Reserved (5)		0FFC4h	
			⋮	
			0FF8Ch	
Signatures (6)	IP Encapsulation Signature2 (5)		0FF8Ah	
	IP Encapsulation Signature1 (5) (7)		0FF88h	
	BSL Signature2		0FF86h	
	BSL Signature1		0FF84h	
	JTAG Signature2		0FF82h	
	JTAG Signature1		0FF80h	

(5) May contain a JTAG password required to enable JTAG access to the device.
(6) Signatures are evaluated during device start-up. See the *System Resets, Interrupts, and Operating Modes, System Control Module (SYS)* chapter in the *MSP430FR58xx, MSP430FR59xx, and MSP430FR6xx Family User's Guide* for details.
(7) Must not contain 0AAAAh if used as JTAG password.

6.5 Bootloader (BSL)

The BSL enables programming of the FRAM or RAM using a UART serial interface (FRxxxx devices) or an I^2C interface (FRxxxx1 devices). Access to the device memory through the BSL is protected by an user-defined password. Use of the BSL requires four pins as shown in Table 6-5. BSL entry requires a specific entry sequence on the $\overline{RST}$/NMI/SBWTDIO and TEST/SBWTCK pins. For complete description of the features of the BSL and its implementation, see *MSP430 FRAM Device Bootloader (BSL) User's Guide*
.

Table 6-5. BSL Pin Requirements and Functions

DEVICE SIGNAL	BSL FUNCTION
$\overline{RST}$/NMI/SBWTDIO	Entry sequence signal
TEST/SBWTCK	Entry sequence signal
BSL_TX	Devices with UART BSL (FRxxxx): Data transmit
BSL_RX	Devices with UART BSL (FRxxxx): Data receive
BSL_DAT	Devices with I^2C BSL (FRxxxx1): Data
BSL_CLK	Devices with I^2C BSL (FRxxxx1): Clock
VCC	Power supply
VSS	Ground supply

6.6 JTAG Operation

6.6.1 JTAG Standard Interface

The MSP430 family supports the standard JTAG interface, which requires four signals for sending and receiving data. The JTAG signals are shared with general-purpose I/O. The TEST/SBWTCK pin is used to enable the JTAG signals. In addition to these signals, the $\overline{RST}$/NMI/SBWTDIO is required to interface with MSP430 development tools and device programmers. Table 6-6 lists the JTAG pin requirements. For further details on interfacing to development tools and device programmers, see the *MSP430 Hardware Tools User's Guide*. For a complete description of the features of the JTAG interface and its implementation, see *MSP430 Programming With the JTAG Interface*.

Table 6-6. JTAG Pin Requirements and Functions

DEVICE SIGNAL	DIRECTION	FUNCTION
PJ.3/TCK	IN	JTAG clock input
PJ.2/TMS	IN	JTAG state control
PJ.1/TDI/TCLK	IN	JTAG data input, TCLK input
PJ.0/TDO	OUT	JTAG data output
TEST/SBWTCK	IN	Enable JTAG pins
$\overline{RST}$/NMI/SBWTDIO	IN	External reset
VCC		Power supply
VSS		Ground supply

6.6.2 Spy-Bi-Wire Interface

In addition to the standard JTAG interface, the MSP430 family supports the 2-wire Spy-Bi-Wire interface. Spy-Bi-Wire can be used to interface with MSP430 development tools and device programmers. Table 6-7 lists the Spy-Bi-Wire interface pin requirements. For further details on interfacing to development tools and device programmers, see the *MSP430 Hardware Tools User's Guide*.

Copyright © 2015–2018, Texas Instruments Incorporated

Table 6-7. Spy-Bi-Wire Pin Requirements and Functions

DEVICE SIGNAL	DIRECTION	FUNCTION
TEST/SBWTCK	IN	Spy-Bi-Wire clock input
$\overline{\text{RST}}$/NMI/SBWTDIO	IN, OUT	Spy-Bi-Wire data input/output
VCC		Power supply
VSS		Ground supply

6.7 FRAM

The FRAM can be programmed through the JTAG port, Spy-Bi-Wire (SBW), the BSL, or in-system by the CPU. Features of the FRAM include:

- Ultra-low-power ultra-fast-write nonvolatile memory
- Byte and word access capability
- Programmable and automated wait-state generation
- Error correction coding (ECC)

NOTE

Wait States

For MCLK frequencies > 8 MHz, wait states must be configured following the flow described in the "Wait State Control" section of the "FRAM Controller (FRCTRL)" chapter in the *MSP430FR58xx, MSP430FR59xx, and MSP430FR6xx Family User's Guide*.

For important software design information regarding FRAM including but not limited to partitioning the memory layout according to application-specific code, constant, and data space requirements, the use of FRAM to optimize application energy consumption, and the use of the Memory Protection Unit (MPU) to maximize application robustness by protecting the program code against unintended write accesses, see *MSP430™ FRAM Technology – How To and Best Practices*

6.8 RAM

The RAM is made up of one sector. The sector can be completely powered down in LPM3 and LPM4 to save leakage; however, all data is lost during shutdown.

6.9 Tiny RAM

Twenty-six bytes of Tiny RAM are provided in addition to the complete RAM (see Table 6-36). This memory is always available even in LPM3 and LPM4, while the complete RAM can be powered down in LPM3 and LPM4. Tiny RAM can be used to hold data or a very small stack when the complete RAM is powered down in LPM3 and LPM4. Tiny RAM is not available in LPMx.5.

6.10 Memory Protection Unit (MPU) Including IP Encapsulation

The FRAM can be protected by the MPU from inadvertent CPU execution and read or write access. Features of the MPU include:

- IP encapsulation with programmable boundaries (prevents reads from "outside" like JTAG or non-IP software) in steps of 1KB.
- Main memory partitioning that can be configured in up to three segments in steps of 1KB.
- The access rights for each main and information memory segment can be individually selected.
- Access violation flags with interrupt capability for easy servicing of access violations.

6.11 Peripherals

Peripherals are connected to the CPU through data, address, and control buses. Peripherals can be managed using all instructions. For complete module descriptions, see the *MSP430FR58xx, MSP430FR59xx, and MSP430FR6xx Family User's Guide*.

6.11.1 Digital I/O

There are up to nine 8-bit I/O ports implemented:

- All individual I/O bits are independently programmable.
- Any combination of input, output, and interrupt conditions is possible.
- Programmable pullup or pulldown on all ports.
- Edge-selectable interrupt and LPM3.5 and LPM4.5 wake-up input capability is available for all pins of ports P1 to P4.
- Read and write access to port control registers is supported by all instructions.
- Ports can be accessed byte-wise or word-wise in pairs.
- Capacitive touch functionality is supported on all pins of ports P1 to P7, P9, and PJ.

NOTE

Configuration of Digital I/Os After BOR Reset

To prevent any cross-currents during start-up of the device, all port pins are high-impedance with Schmitt triggers and their module functions disabled. To enable the I/O functionality after a BOR reset, the ports must be configured first and then the LOCKLPM5 bit must be cleared. For details see the "Digital I/O" chapter, section "Configuration After Reset" in the *MSP430FR58xx, MSP430FR59xx, and MSP430FR6xx Family User's Guide*.

6.11.2 Oscillator and Clock System (CS)

The clock system includes support for a 32-kHz watch-crystal oscillator XT1 (LF), an internal very-low-power low-frequency oscillator (VLO), an integrated internal digitally controlled oscillator (DCO), and a high-frequency crystal oscillator XT2 (HF). The clock system module is designed to meet the requirements of both low system cost and low power consumption. A fail-safe mechanism exists for all crystal sources. The clock system module provides the following clock signals:

- Auxiliary clock (ACLK), sourced from a 32-kHz watch crystal (LFXT1), the internal low-frequency oscillator (VLO), or a digital external low frequency (<50 kHz) clock source.
- Main clock (MCLK), the system clock used by the CPU. MCLK can be sourced from a high-frequency crystal (HFXT2), the internal DCO, a 32-kHz watch crystal (LFXT1), the internal VLO, or a digital external clock source.
- Sub-Main clock (SMCLK), the subsystem clock used by the peripheral modules. SMCLK can be sourced by same sources made available to MCLK.

6.11.3 Power-Management Module (PMM)

The PMM includes an integrated voltage regulator that supplies the core voltage to the device . The PMM also includes the supply voltage supervisor (SVS) and brownout protection. The brownout circuit is implemented to provide the proper internal reset signal to the device during power on and power off. The SVS circuitry detects if the supply voltage drops below a safe level. SVS circuitry is available on the primary and core supplies.

6.11.4 Hardware Multiplier

The multiplication operation is supported by a dedicated peripheral module. The module performs operations with 32-, 24-, 16-, and 8-bit operands. The module supports signed and unsigned multiplication as well as signed and unsigned multiply-and-accumulate operations.

Copyright © 2015–2018, Texas Instruments Incorporated

6.11.5 Real-Time Clock (RTC_C)

The RTC_C module contains an integrated real-time clock (RTC) with the following features implemented:

- Calendar mode with leap year correction
- General-purpose counter mode

The internal calendar compensates for months with fewer than 31 days and includes leap year correction. The RTC_C also supports flexible alarm functions and offset-calibration hardware. RTC operation is available in LPM3.5 modes to minimize power consumption.

6.11.6 Watchdog Timer (WDT_A)

The primary function of the WDT_A module is to perform a controlled system restart after a software problem occurs. If the selected time interval expires, a system reset is generated. If the watchdog function is not needed in an application, the module can be configured as an interval timer and can generate interrupts at selected time intervals. Table 6-8 lists the clocks that the WDT_A module can use.

Table 6-8. WDT_A Clocks

WDTSSEL	NORMAL OPERATION (WATCHDOG AND INTERVAL TIMER MODE)
00	SMCLK
01	ACLK
10	VLOCLK
11	LFMODOSC

6.11.7 System Module (SYS)

The SYS module handles many of the system functions within the device. These system functions include power-on reset and power-up clear handling, NMI source selection and management, reset interrupt vector generators, bootloader entry mechanisms, and configuration management (device descriptors). Also included is a data exchange mechanism using JTAG called a JTAG mailbox that can be used in the application. Table 6-9 lists the SYS module interrupt vector registers.

Table 6-9. System Module Interrupt Vector Registers

INTERRUPT VECTOR REGISTER	ADDRESS	INTERRUPT EVENT	VALUE	PRIORITY
SYSRSTIV, System Reset	019Eh	No interrupt pending	00h	
		Brownout (BOR)	02h	Highest
		RSTIFG $\overline{\text{RST}}$/NMI (BOR)	04h	
		PMMSWBOR software BOR (BOR)	06h	
		LPMx.5 wakeup (BOR)	08h	
		Security violation (BOR)	0Ah	
		Reserved	0Ch	
		SVSHIFG SVSH event (BOR)	0Eh	
		Reserved	10h	
		Reserved	12h	
		PMMSWPOR software POR (POR)	14h	
		WDTIFG watchdog time-out (PUC)	16h	
		WDTPW password violation (PUC)	18h	
		FRCTLPW password violation (PUC)	1Ah	
		Uncorrectable FRAM bit error detection (PUC)	1Ch	
		Peripheral area fetch (PUC)	1Eh	
		PMMPW PMM password violation (PUC)	20h	
		MPUPW MPU password violation (PUC)	22h	
		CSPW CS password violation (PUC)	24h	
		MPUSEGPIFG encapsulated IP memory segment violation (PUC)	26h	
		MPUSEGIIFG information memory segment violation (PUC)	28h	
		MPUSEG1IFG segment 1 memory violation (PUC)	2Ah	
		MPUSEG2IFG segment 2 memory violation (PUC)	2Ch	
		MPUSEG3IFG segment 3 memory violation (PUC)	2Eh	
		ACCTEIFG access time error (PUC)	30h	
		Reserved	32h to 3Eh	Lowest
SYSSNIV, System NMI	019Ch	No interrupt pending	00h	
		Reserved	02h	Highest
		Uncorrectable FRAM bit error detection	04h	
		Reserved	06h	
		MPUSEGPIFG encapsulated IP memory segment violation	08h	
		MPUSEGIIFG information memory segment violation	0Ah	
		MPUSEG1IFG segment 1 memory violation	0Ch	
		MPUSEG2IFG segment 2 memory violation	0Eh	
		MPUSEG3IFG segment 3 memory violation	10h	
		VMAIFG vacant memory access	12h	
		JMBINIFG JTAG mailbox input	14h	
		JMBOUTIFG JTAG mailbox output	16h	
		Correctable FRAM bit error detection	18h	
		Reserved	1Ah to 1Eh	Lowest
SYSUNIV, User NMI	019Ah	No interrupt pending	00h	
		NMIIFG NMI pin	02h	Highest
		OFIFG oscillator fault	04h	
		Reserved	06h	
		Reserved	08h	
		Reserved	0Ah to 1Eh	Lowest

Copyright © 2015–2018, Texas Instruments Incorporated

6.11.8 DMA Controller

The DMA controller allows movement of data from one memory address to another without CPU intervention. For example, the DMA controller can be used to move data from the ADC12_B conversion memory to RAM. Using the DMA controller can increase the throughput of peripheral modules. The DMA controller reduces system power consumption by allowing the CPU to remain in sleep mode, without having to awaken to move data to or from a peripheral. Table 6-10 lists the available DMA triggers.

Table 6-10. DMA Trigger Assignments (1)

TRIGGER	CHANNEL 0	CHANNEL 1	CHANNEL 2
0	DMAREQ	DMAREQ	DMAREQ
1	TA0CCR0 CCIFG	TA0CCR0 CCIFG	TA0CCR0 CCIFG
2	TA0CCR2 CCIFG	TA0CCR2 CCIFG	TA0CCR2 CCIFG
3	TA1CCR0 CCIFG	TA1CCR0 CCIFG	TA1CCR0 CCIFG
4	TA1CCR2 CCIFG	TA1CCR2 CCIFG	TA1CCR2 CCIFG
5	TA2 CCR0 CCIFG	TA2 CCR0 CCIFG	TA2 CCR0 CCIFG
6	TA3 CCR0 CCIFG	TA3 CCR0 CCIFG	TA3 CCR0 CCIFG
7	TB0CCR0 CCIFG	TB0CCR0 CCIFG	TB0CCR0 CCIFG
8	TB0CCR2 CCIFG	TB0CCR2 CCIFG	TB0CCR2 CCIFG
9	Reserved	Reserved	Reserved
10	Reserved	Reserved	Reserved
11	AES Trigger 0 (2)	AES Trigger 0 (2)	AES Trigger 0 (2)
12	AES Trigger 1 (2)	AES Trigger 1 (2)	AES Trigger 1 (2)
13	AES Trigger 2 (2)	AES Trigger 2 (2)	AES Trigger 2 (2)
14	UCA0RXIFG	UCA0RXIFG	UCA0RXIFG
15	UCA0TXIFG	UCA0TXIFG	UCA0TXIFG
16	UCA1RXIFG	UCA1RXIFG	UCA1RXIFG
17	UCA1TXIFG	UCA1TXIFG	UCA1TXIFG
18	UCB0RXIFG (SPI) UCB0RXIFG0 (I^2C)	UCB0RXIFG (SPI) UCB0RXIFG0 (I^2C)	UCB0RXIFG (SPI) UCB0RXIFG0 (I^2C)
19	UCB0TXIFG (SPI) UCB0TXIFG0 (I^2C)	UCB0TXIFG (SPI) UCB0TXIFG0 (I^2C)	UCB0TXIFG (SPI) UCB0TXIFG0 (I^2C)
20	UCB0RXIFG1 (I^2C)	UCB0RXIFG1 (I^2C)	UCB0RXIFG1 (I^2C)
21	UCB0TXIFG1 (I^2C)	UCB0TXIFG1 (I^2C)	UCB0TXIFG1 (I^2C)
22	UCB0RXIFG2 (I^2C)	UCB0RXIFG2 (I^2C)	UCB0RXIFG2 (I^2C)
23	UCB0TXIFG2 (I^2C)	UCB0TXIFG2 (I^2C)	UCB0TXIFG2 (I^2C)
24	UCB1RXIFG (SPI) UCB1RXIFG0 (I^2C)	UCB1RXIFG (SPI) UCB1RXIFG0 (I^2C)	UCB1RXIFG (SPI) UCB1RXIFG0 (I^2C)
25	UCB1TXIFG (SPI) UCB1TXIFG0 (I^2C)	UCB1TXIFG (SPI) UCB1TXIFG0 (I^2C)	UCB1TXIFG (SPI) UCB1TXIFG0 (I^2C)
26	ADC12 end of conversion (3)	ADC12 end of conversion (3)	ADC12 end of conversion (3)
27	Reserved	Reserved	Reserved
28	Reserved	Reserved	Reserved
29	MPY ready	MPY ready	MPY ready
30	DMA2IFG	DMA0IFG	DMA1IFG
31	DMAE0	DMAE0	DMAE0

(1) If a reserved trigger source is selected, no trigger is generated.
(2) Only on devices with AES. Reserved on devices without AES.
(3) Only on devices with ADC. Reserved on devices without ADC.

6.11.9 Enhanced Universal Serial Communication Interface (eUSCI)

The eUSCI modules are used for serial data communication. The eUSCI module supports synchronous communication protocols such as SPI (3 or 4 pin) and I^2C, and asynchronous communication protocols such as UART, enhanced UART with automatic baud-rate detection, and IrDA.

The eUSCI_An module provides support for SPI (3 or 4 pin), UART, enhanced UART, and IrDA.

The eUSCI_Bn module provides support for SPI (3 or 4 pin) and I^2C.

Two eUSCI_A modules and two eUSCI_B modules are implemented.

6.11.10 Timer_A TA0, Timer_A TA1

TA0 and TA1 are 16-bit timers/counters (Timer_A type) with three capture/compare registers each. TA0 and TA1 can support multiple capture/compares, PWM outputs, and interval timing (see Table 6-11 and Table 6-12). TA0 and TA1 have extensive interrupt capabilities. Interrupts may be generated from the counter on overflow conditions and from each of the capture/compare registers.

Table 6-11. Timer_A TA0 Signal Connections

INPUT PORT PIN	DEVICE INPUT SIGNAL	MODULE INPUT SIGNAL	MODULE BLOCK	MODULE OUTPUT SIGNAL	DEVICE OUTPUT SIGNAL	OUTPUT PORT PIN
P1.2 or P7.0	TA0CLK	TACLK	Timer	N/A	N/A	
	ACLK (internal)	ACLK				
	SMCLK (internal)	SMCLK				
P1.2 or P7.0	$\overline{\text{TA0CLK}}$	INCLK				
P1.5	TA0.0	CCI0A	CCR0	TA0	TA0.0	P1.5
P7.1	TA0.0	CCI0B				P7.1
	DV_{SS}	GND				
	DV_{CC}	V_{CC}				
P1.0 or P1.6 or P7.2	TA0.1	CCI1A	CCR1	TA1	TA0.1	P1.0
						P1.6
	COUT (internal)	CCI1B				P7.2
	DV_{SS}	GND				ADC12 (internal) (1) ADC12SHSx = {1}
	DV_{CC}	V_{CC}				
P1.1 or P1.7 or P7.3	TA0.2	CCI2A	CCR2	TA2	TA0.2	P1.1
	ACLK (internal)	CCI2B				P1.7
	DV_{SS}	GND				P7.3
	DV_{CC}	V_{CC}				

(1) Only on devices with ADC

Copyright © 2015–2018, Texas Instruments Incorporated

Table 6-12. Timer_A TA1 Signal Connections

INPUT PORT PIN	DEVICE INPUT SIGNAL	MODULE INPUT SIGNAL	MODULE BLOCK	MODULE OUTPUT SIGNAL	DEVICE OUTPUT SIGNAL	OUTPUT PORT PIN
P1.1 or P4.4	TA1CLK	TACLK	Timer	N/A	N/A	
	ACLK (internal)	ACLK				
	SMCLK (internal)	SMCLK				
P1.1 or P4.4	$\overline{\text{TA1CLK}}$	INCLK				
P1.4 or P4.5	TA1.0	CCI0A	CCR0	TA0	TA1.0	P1.4
	DV_{SS}	CCI0B				P4.5
	DV_{SS}	GND				
	DV_{CC}	V_{CC}				
P1.2 or P3.3 or P4.6	TA1.1	CCI1A	CCR1	TA1	TA1.1	P1.2
						P4.6
	COUT (internal)	CCI1B				P3.3
	DV_{SS}	GND				ADC12 (internal) (1) ADC12SHSx = {4}
	DV_{CC}	V_{CC}				
P1.3 or P4.7	TA1.2	CCI2A	CCR2	TA2	TA1.2	P1.3
	ACLK (internal)	CCI2B				P4.7
	DV_{SS}	GND				
	DV_{CC}	V_{CC}				

(1) Only on devices with ADC

6.11.11 Timer_A TA2

TA2 is a 16-bit timer/counter (Timer_A type) with two capture/compare registers each and with internal connections only. TA2 can support multiple capture/compares, PWM outputs, and interval timing (see Table 6-13). TA2 has extensive interrupt capabilities. Interrupts may be generated from the counter on overflow conditions and from each of the capture/compare registers.

Table 6-13. Timer_A TA2 Signal Connections

DEVICE INPUT SIGNAL	MODULE INPUT NAME	MODULE BLOCK	MODULE OUTPUT SIGNAL	DEVICE OUTPUT SIGNAL
COUT (internal)	TACLK	Timer	N/A	
ACLK (internal)	ACLK			
SMCLK (internal)	SMCLK			
From Capacitive Touch I/O 0 (internal)	INCLK			
TA3 CCR0 output (internal)	CCI0A	CCR0	TA0	TA3 CCI0A input
ACLK (internal)	CCI0B			
DV_{SS}	GND			
DV_{CC}	V_{CC}			
From Capacitive Touch I/O 0 (internal)	CCI1A	CCR1	TA1	ADC12 (internal) (1) ADC12SHSx = {5}
COUT (internal)	CCI1B			
DV_{SS}	GND			
DV_{CC}	V_{CC}			

(1) Only on devices with ADC

6.11.12 Timer_A TA3

TA3 is a 16-bit timer/counter (Timer_A type) with five capture/compare registers each and with internal connections only. TA3 can support multiple capture/compares, PWM outputs, and interval timing (see Table 6-14). TA3 has extensive interrupt capabilities. Interrupts may be generated from the counter on overflow conditions and from each of the capture/compare registers.

Table 6-14. Timer_A TA3 Signal Connections

DEVICE INPUT SIGNAL	MODULE INPUT NAME	MODULE BLOCK	MODULE OUTPUT SIGNAL	DEVICE OUTPUT SIGNAL
COUT (internal)	TACLK	Timer	N/A	
ACLK (internal)	ACLK			
SMCLK (internal)	SMCLK			
From Capacitive Touch I/O 1 (internal)	INCLK			
TA2 CCR0 output (internal)	CCI0A	CCR0	TA0	TA2 CCI0A input
ACLK (internal)	CCI0B			
DV_{SS}	GND			
DV_{CC}	V_{CC}			
From Capacitive Touch I/O 1 (internal)	CCI1A	CCR1	TA1	ADC12 (internal) (1) ADC12SHSx = {6}
COUT (internal)	CCI1B			
DV_{SS}	GND			
DV_{CC}	V_{CC}			
DV_{SS}	CCI2A	CCR2	TA2	
P3.0 DV_{SS} (FR592x(1) 64-pin package)	CCI2B			P3.0 (Note: Not available for FR592x(1) 64-pin package devices)
DV_{SS}	GND			
DV_{CC}	V_{CC}			
DV_{SS}	CCI3A	CCR3	TA3	
P3.1 DV_{SS} (FR592x(1) 64-pin package)	CCI3B			P3.1 (Note: Not available for FR592x(1) 64-pin package devices)
DV_{SS}	GND			
DV_{CC}	V_{CC}			
DV_{SS}	CCI4A	CCR4	TA4	
P3.2 DV_{SS} (FR592x(1) 64-pin package)	CCI4B			P3.2 (Note: Not available for FR592x(1) 64-pin package devices)
DV_{SS}	GND			
DV_{CC}	V_{CC}			

(1) Only on devices with ADC.

Copyright © 2015–2018, Texas Instruments Incorporated

6.11.13 Timer_B TB0

TB0 is a 16-bit timer/counter (Timer_B type) with seven capture/compare registers each. TB0 can support multiple capture/compares, PWM outputs, and interval timing (see Table 6-15). TB0 has extensive interrupt capabilities. Interrupts may be generated from the counter on overflow conditions and from each of the capture/compare registers.

Table 6-15. Timer_B TB0 Signal Connections

INPUT PORT PIN	DEVICE INPUT SIGNAL	MODULE INPUT SIGNAL	MODULE BLOCK	MODULE OUTPUT SIGNAL	DEVICE OUTPUT SIGNAL	OUTPUT PORT PIN
P2.0 or P3.3 or P5.7	TB0CLK	TBCLK	Timer	N/A	N/A	
	ACLK (internal)	ACLK				
	SMCLK (internal)	SMCLK				
P2.0 or P3.3 or P5.7	$\overline{\text{TB0CLK}}$	INCLK				
P3.4	TB0.0	CCI0A	CCR0	TB0	TB0.0	P3.4
P6.4	TB0.0	CCI0B				P6.4
	DV_{SS}	GND				ADC12 (internal) (1) ADC12SHSx = {2}
	DV_{CC}	V_{CC}				
P3.5 or P6.5	TB0.1	CCI1A	CCR1	TB1	TB0.1	P3.5
	COUT (internal)	CCI1B				P6.5
	DV_{SS}	GND				ADC12 (internal) (1) ADC12SHSx = {3}
	DV_{CC}	V_{CC}				
P3.6 or P6.6	TB0.2	CCI2A	CCR2	TB2	TB0.2	P3.6
	ACLK (internal)	CCI2B				P6.6
	DV_{SS}	GND				
	DV_{CC}	V_{CC}				
	DV_{SS}	CCI3A	CCR3	TB3	TB0.3	
P3.7	TB0.3	CCI3B				P3.7
	DV_{SS}	GND				
	DV_{CC}	V_{CC}				
	DV_{SS}	CCI4A	CCR4	TB4	TB0.4	
P2.2	TB0.4	CCI4B				P2.2
	DV_{SS}	GND				
	DV_{CC}	V_{CC}				
	DV_{SS}	CCI5A	CCR5	TB5	TB0.5	
P2.1	TB0.5	CCI5B				P2.1
	DV_{SS}	GND				
	DV_{CC}	V_{CC}				
	DV_{SS}	CCI6A	CCR6	TB6	TB0.6	
P2.0	TB0.6	CCI6B				P2.0
	DV_{SS}	GND				
	DV_{CC}	V_{CC}				

(1) Only on devices with ADC

6.11.14 ADC12_B

The ADC12_B module supports fast 12-bit analog-to-digital conversions with differential and single-ended inputs. The module implements a 12-bit SAR core, sample select control, reference generator and a conversion result buffer. A window comparator with a lower and upper limits allows CPU-independent result monitoring with three window comparator interrupt flags.

Table 6-16 summarizes the available external trigger sources.

Table 6-17 lists the available multiplexing between internal and external analog inputs.

Table 6-16. ADC12_B Trigger Signal Connections

ADC12SHSx		CONNECTED TRIGGER SOURCE
BINARY	DECIMAL	
000	0	Software (ADC12SC)
001	1	Timer_A TA0 CCR1 output
010	2	Timer_B TB0 CCR0 output
011	3	Timer_B TB0 CCR1 output
100	4	Timer_A TA1 CCR1 output
101	5	Timer_A TA2 CCR1 output
110	6	Timer_A TA3 CCR1 output
111	7	Reserved (DVSS)

Table 6-17. ADC12_B External and Internal Signal Mapping

CONTROL BIT	EXTERNAL (CONTROL BIT = 0)	INTERNAL (CONTROL BIT = 1)
ADC12BATMAP	A31	Battery monitor
ADC12TCMAP	A30	Temperature sensor
ADC12CH0MAP	A29	N/A (1)
ADC12CH1MAP	A28	N/A (1)
ADC12CH2MAP	A27	N/A (1)
ADC12CH3MAP	A26	N/A (1)

(1) N/A: No internal signal available on this device.

6.11.15 Comparator_E

The primary function of the Comparator_E module is to support precision slope analog-to-digital conversions, battery voltage supervision, and monitoring of external analog signals.

6.11.16 CRC16

The CRC16 module produces a signature based on a sequence of entered data values and can be used for data checking purposes. The CRC16 signature is based on the CRC-CCITT standard.

6.11.17 CRC32

The CRC32 module produces a signature based on a sequence of entered data values and can be used for data checking purposes. The CRC32 signature is based on the ISO 3309 standard.

6.11.18 AES256 Accelerator

The AES accelerator module performs encryption and decryption of 128-bit data with 128-, 192-, or 256-bit keys according to the advanced encryption standard (AES) (FIPS PUB 197) in hardware.

Copyright © 2015–2018, Texas Instruments Incorporated

6.11.19 True Random Seed

The Device Descriptor Info (TLV) (see Section 6.12) contains a 128-bit true random seed that can be used to implement a deterministic random-number generator.

6.11.20 Shared Reference (REF_A)

The REF_A module is responsible for generation of all critical reference voltages that can be used by the various analog peripherals in the device.

6.11.21 Embedded Emulation

6.11.21.1 Embedded Emulation Module (EEM)

The EEM supports real-time in-system debugging. The S version of the EEM has the following features:

- Three hardware triggers or breakpoints on memory access
- One hardware trigger or breakpoint on CPU register write access
- Up to four hardware triggers that can be combined to form complex triggers or breakpoints
- One cycle counter
- Clock control on module level

6.11.21.2 EnergyTrace++ Technology

The devices implement circuitry to support EnergyTrace++ technology. The EnergyTrace++ technology lets you observe information about the internal states of the microcontroller. These states include the CPU Program Counter (PC), the ON or OFF status of the peripherals and the system clocks (regardless of the clock source), and the low-power mode currently in use. These states can always be read by a debug tool, even when the microcontroller sleeps in LPMx.5 modes.

The activity of the following modules can be observed:

- MPY is calculating.
- WDT is counting.
- RTC is counting.
- ADC: a sequence, sample, or conversion is active.
- REF: REFBG or REFGEN active and BG in static mode.
- COMP is on.
- AES is encrypting or decrypting.
- eUSCI_A0 is transferring (receiving or transmitting) data.
- eUSCI_A1 is transferring (receiving or transmitting) data.
- eUSCI_B0 is transferring (receiving or transmitting) data.
- eUSCI_B1 is transferring (receiving or transmitting) data.
- TB0 is counting.
- TA0 is counting.
- TA1 is counting.
- TA2 is counting.
- TA3 is counting.

6.11.22 Input/Output Diagrams

6.11.22.1 Digital I/O Functionality Port P1 to P7 and P9

The port pins provide the following features:

- Interrupt and wakeup from LPMx.5 capability for ports P1 to P4
- Capacitive touch functionality (see Section 6.11.22.2)
- Up to three digital module input and/or output functions

Figure 6-1 shows the features and the corresponding control logic (besides the Capacitive Touch logic). Figure 6-1 is applicable for all port pins P1.0 to P9.7, unless a dedicated diagram is available in the following sections. The module functions provided per pin and whether the direction is controlled by the module or by the port direction register for the selected secondary function are described in the following pin function tables.

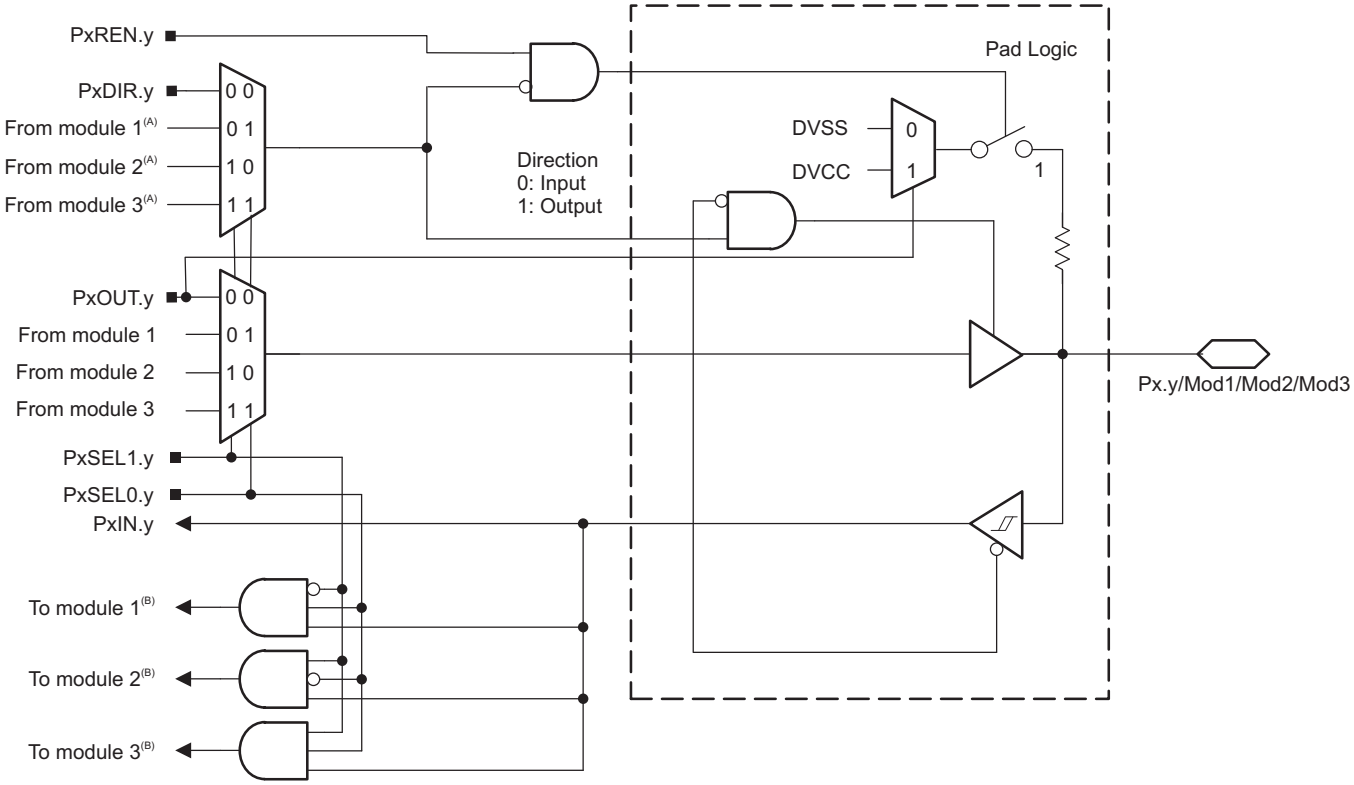

A. The direction is either controlled by connected module or by the corresponding PxDIR.y bit. See pin function tables.
B. The inputs from several pins towards a module are ORed together.
NOTE: Functional representation only.

Figure 6-1. General Port Pin Diagram

Copyright © 2015–2018, Texas Instruments Incorporated

6.11.22.2 Capacitive Touch Functionality on Port P1 to P7, P9, and PJ

Figure 6-2 shows the the capacitive touch functionality that is available on all port pins. The capacitive touch functionality is controlled using the capacitive touch I/O control registers CAPTIO0CTL and CAPTIO1CTL as described in the *MSP430FR58xx, MSP430FR59xx, MSP430FR68xx, and MSP430FR69xx Family User's Guide*. The capacitive touch functionality is not shown in the other pin diagrams.

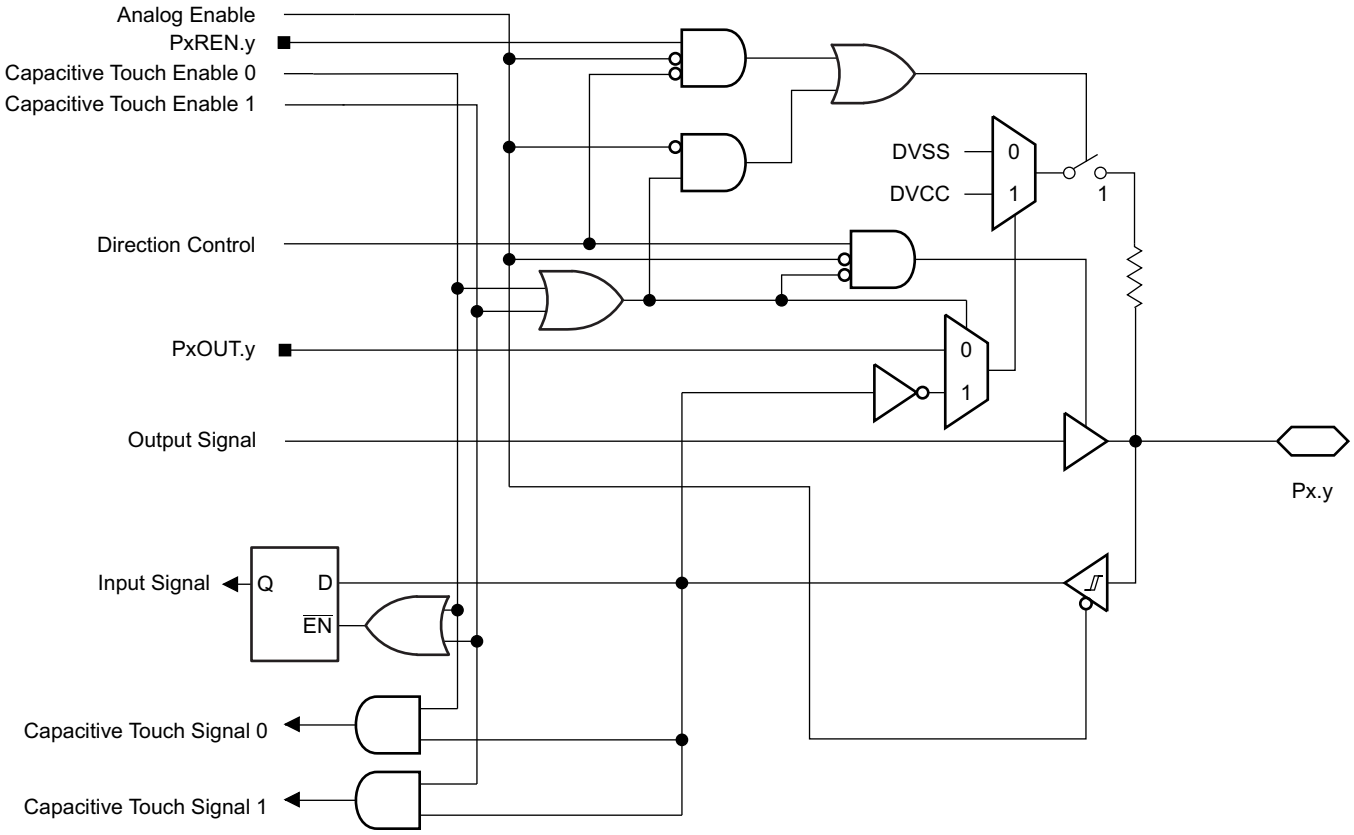

NOTE: Functional representation only.

Figure 6-2. Capacitive Touch I/O Functionality

6.11.22.3 Port P1 (P1.0 to P1.3) Input/Output With Schmitt Trigger

Figure 6-3 shows the port diagram. Table 6-18 summarizes the selection of the pin functions.

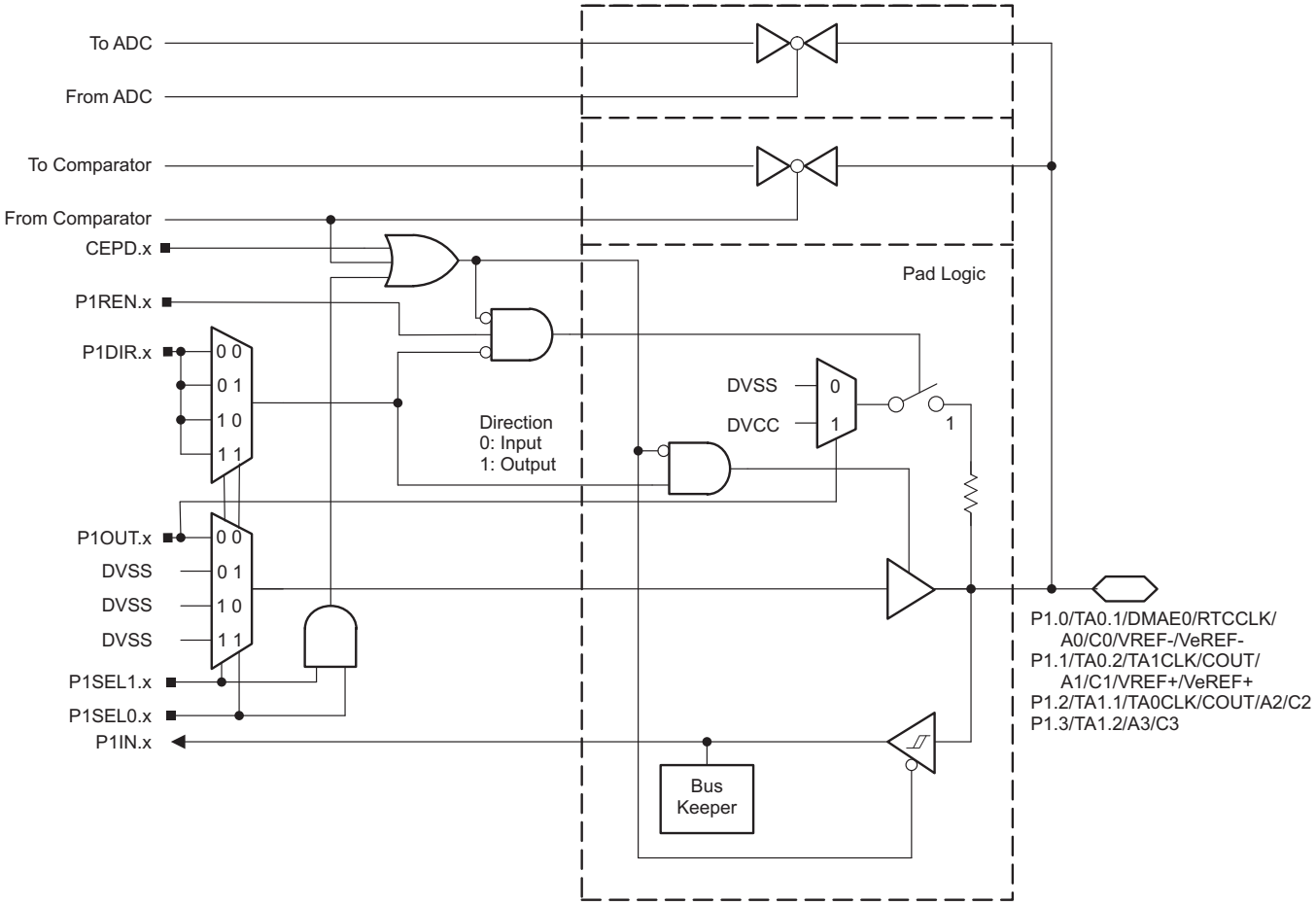

NOTE: Functional representation only.

Figure 6-3. Port P1 (P1.0 to P1.3) Diagram

Copyright © 2015–2018, Texas Instruments Incorporated

Table 6-18. Port P1 (P1.0 to P1.3) Pin Functions

PIN NAME (P1.x)	x	FUNCTION	CONTROL BITS OR SIGNALS (1)		
			P1DIR.x	P1SEL1.x	P1SEL0.x
P1.0/TA0.1/DMAE0/RTCCLK/A0/C0/ VREF-/VeREF-	0	P1.0 (I/O)	I: 0; O: 1	0	0
		TA0.CCI1A	0	0	1
		TA0.1	1		
		DMAE0	0	1	0
		RTCCLK(2)	1		
		A0, C0, VREF-, VeREF- (3) (4)	X	1	1
P1.1/TA0.2/TA1CLK/COUT/A1/C1/ VREF+/VeREF+	1	P1.1 (I/O)	I: 0; O: 1	0	0
		TA0.CCI2A	0	0	1
		TA0.2	1		
		TA1CLK	0	1	0
		COUT(5)	1		
		A1, C1, VREF+, VeREF+ (3) (4)	X	1	1
P1.2/TA1.1/TA0CLK/COUT/A2/C2	2	P1.2 (I/O)	I: 0; O: 1	0	0
		TA1.CCI1A	0	0	1
		TA1.1	1		
		TA0CLK	0	1	0
		COUT(5)	1		
		A2, C2 (3) (4)	X	1	1
P1.3/TA1.2/A3/C3	3	P1.3 (I/O)	I: 0; O: 1	0	0
		TA1.CCI2A	0	0	1
		TA1.2	1		
		N/A	0	1	0
		Internally tied to DVSS	1		
		A3, C3 (3) (4)	X	1	1

(1) X = Don't care
(2) Do not use this pin as RTCCLK output if the DMAE0 functionality is used on any other pin. Select an alternative RTCCLK output pin.
(3) Setting P1SEL1.x and P1SEL0.x disables the output driver and the input Schmitt trigger to prevent parasitic cross currents when applying analog signals.
(4) Setting the CEPD.x bit of the comparator disables the output driver and the input Schmitt trigger to prevent parasitic cross currents when applying analog signals. Selecting the Cx input pin to the comparator multiplexer with the input select bits in the comparator module automatically disables output driver and input buffer for that pin, regardless of the state of the associated CEPD.x bit.
(5) Do not use this pin as COUT output if the TA1CLK functionality is used on any other pin. Select an alternative COUT output pin.

6.11.22.4 Port P1 (P1.4 to P1.7) Input/Output With Schmitt Trigger

For the port diagram, see Figure 6-1. Table 6-19 summarizes the selection of the pin functions.

Table 6-19. Port P1 (P1.4 to P1.7) Pin Functions

PIN NAME (P1.x)	x	FUNCTION	CONTROL BITS OR SIGNALS (1)		
			P1DIR.x	P1SEL1.x	P1SEL0.x
P1.4/UCB0CLK/UCA0STE/TA1.0	4	P1.4 (I/O)	I: 0; O: 1	0	0
		UCB0CLK	X (2)	0	1
		UCA0STE	X (3)	1	0
		TA1.CCI0A	0	1	1
		TA1.0	1		
P1.5/UCB0STE/UCA0CLK/TA0.0	5	P1.5 (I/O)	I: 0; O: 1	0	0
		UCB0STE	X (2)	0	1
		UCA0CLK	X (3)	1	0
		TA0.CCI0A	0	1	1
		TA0.0	1		
P1.6/UCB0SIMO/UCB0SDA/TA0.1	6	P1.6 (I/O)	I: 0; O: 1	0	0
		UCB0SIMO/UCB0SDA	X (2)	0	1
		N/A	0	1	0
		Internally tied to DVSS	1		
		TA0.CCI1A	0	1	1
		TA0.1	1		
P1.7/UCB0SOMI/UCB0SCL/TA0.2	7	P1.7 (I/O)	I: 0; O: 1	0	0
		UCB0SOMI/UCB0SCL	X (2)	0	1
		N/A	0	1	0
		Internally tied to DVSS	1		
		TA0.CCI2A	0	1	1
		TA0.2	1		

(1) X = Don't care
(2) Direction controlled by eUSCI_B0 module.
(3) Direction controlled by eUSCI_A0 module.

Copyright © 2015–2018, Texas Instruments Incorporated

6.11.22.5 Port P2 (P2.0 to P2.3) Input/Output With Schmitt Trigger

For the port diagram, see Figure 6-1. Table 6-20 summarizes the selection of the pin functions.

Table 6-20. Port P2 (P2.0 to P2.3) Pin Functions

PIN NAME (P2.x)	x	FUNCTION	CONTROL BITS OR SIGNALS (1)		
			P2DIR.x	P2SEL1.x	P2SEL0.x
P2.0/UCA0SIMO/UCA0TXD/TB0.6/ TB0CLK	0	P2.0 (I/O)	I: 0; O: 1	0	0
		UCA0SIMO/UCA0TXD	X (2)	0	1
		TB0.CCI6B	0	1	0
		TB0.6	1		
		TB0CLK	0	1	1
		Internally tied to DVSS	1		
P2.1/UCA0SOMI/UCA0RXD/TB0.5/ DMAE0	1	P2.1 (I/O)	I: 0; O: 1	0	0
		UCA0SOMI/UCA0RXD	X (2)	0	1
		TB0.CCI5B	0	1	0
		TB0.5	1		
		DMA0E	0	1	1
		Internally tied to DVSS	1		
P2.2/UCA0CLK/TB0.4/RTCCLK	2	P2.2 (I/O)	I: 0; O: 1	0	0
		UCA0CLK	X (2)	0	1
		TB0.CCI4B	0	1	0
		TB0.4	1		
		N/A	0	1	1
		RTCCLK	1		
P2.3/UCA0STE/TB0OUTH	3	P2.3 (I/O)	I: 0; O: 1	0	0
		UCA0STE	X (2)	0	1
		TB0OUTH	0	1	0
		Internally tied to DVSS	1		
		N/A	0	1	1
		Internally tied to DVSS	1		

(1) X = Don't care
(2) Direction controlled by eUSCI_A0 module.

6.11.22.6 Port P3 (P3.0 to P3.7) Input/Output With Schmitt Trigger

For the port diagram, see Figure 6-1. Table 6-21 and Table 6-22 summarize the selection of the pin functions.

Table 6-21. Port P3 (P3.0 to P3.3) Pin Functions

PIN NAME (P3.x)	x	FUNCTION	CONTROL BITS OR SIGNALS (1)		
			P3DIR.x	P3SEL1.x	P3SEL0.x
P3.0/UCB1CLK	0	P3.0 (I/O)	I: 0; O: 1	0	0
		UCB1CLK	X (2)	0	1
		TA3.CCI2B (Note: not available for FR592x(1) 64-pin package devices)	0	1	0
		TA3.2 Internally tied to DVSS (for FR292x(1) 64-pin package devices)	1		
		N/A	0	1	1
		Internally tied to DVSS	1		
P3.1/UCB1SIMO/UCB1SDA	1	P3.1 (I/O)	I: 0; O: 1	0	0
		UCB1SIMO/UCB1SDA	X (2)	0	1
		TA3.CCI3B (Note: not available for FR592x(1) 64-pin package devices)	0	1	0
		TA3.3 Internally tied to DVSS (for FR592x(1) 64-pin package devices)	1		
		N/A	0	1	1
		Internally tied to DVSS	1		
P3.2/UCB1SOMI/UCB1SCL	2	P3.2 (I/O)	I: 0; O: 1	0	0
		UCB1SOMI/UCB1SCL	X (2)	0	1
		TA3.CCI4B (Note: not available for FR592x(1) 64-pin package devices)	0	1	0
		TA3.4 Internally tied to DVSS (for FR592x(1) 64-pin package devices)	1		
			0	1	1
			1		
P3.3/TA1.1/TB0CLK	3	P3.3 (I/O)	I: 0; O: 1	0	0
		N/A	0	0	1
		Internally tied to DVSS	1		
		TA1.CCI1A	0	1	0
		TA1.1	1		
		TB0CLK	0	1	1
		Internally tied to DVSS	1		

(1) X = Don't care
(2) Direction controlled by eUSCI_B1 module.

Copyright © 2015–2018, Texas Instruments Incorporated

Table 6-22. Port P3 (P3.4 to P3.7) Pin Functions

PIN NAME (P3.x)	x	FUNCTION	CONTROL BITS OR SIGNALS (1)		
			P3DIR.x	P3SEL1.x	P3SEL0.x
P3.4/UCA1SIMO/UCA1TXD/TB0.0	4	P3.4 (I/O)	I: 0; O: 1	0	0
		UCA1SIMO/UCA1TXD	X (2)	0	1
		TB0CCI0A	0	1	0
		TB0.0	1		
		N/A	0	1	1
		Internally tied to DVSS	1		
P3.5/UCA1SOMI/UCA1RXD/TB0.1	5	P3.5 (I/O)	I: 0; O: 1	0	0
		UCA1SOMI/UCA1RXD	X (2)	0	1
		TB0CCI1A	0	1	0
		TB0.1	1		
		N/A	0	1	1
		Internally tied to DVSS	1		
P3.6/UCA1CLK/TB0.2	6	P3.6 (I/O)	I: 0; O: 1	0	0
		UCA1CLK	X (2)	0	1
		TB0CCI2A	0	1	0
		TB0.2	1		
		N/A	0	1	1
		Internally tied to DVSS	1		
P3.7/UCA1STE/TB0.3	7	P3.7 (I/O)	I: 0; O: 1	0	0
		UCA1STE	X (2)	0	1
		TB0CCI3B	0	1	0
		TB0.3	1		
		N/A	0	1	1
		Internally tied to DVSS	1		

(1) X = Don't care
(2) Direction controlled by eUSCI_A1 module.

6.11.22.7 Port P4 (P4.2 to P4.7) Input/Output With Schmitt Trigger

For the port diagram, see Figure 6-1. Table 6-23 and Table 6-24 summarize the selection of the pin functions.

Table 6-23. Port P4 (P4.2 and P4.3) Pin Functions

PIN NAME (P4.x)	x	FUNCTION	CONTROL BITS OR SIGNALS (1)		
			P4DIR.x	P4SEL1.x	P4SEL0.x
P4.2/UCA0SIMO/UCA0TXD/UCB1CLK	2	P4.2 (I/O)	I: 0; O: 1	0	0
		UCA0SIMO/UCA0TXD	X (2)	0	1
		UCB1CLK	X (3)	1	0
		N/A	0	1	1
		Internally tied to DVSS	1		
P4.3/UCA0SOMI/UCA0RXD/UCB1STE	3	P4.3 (I/O)	I: 0; O: 1	0	0
		UCA0SOMI/UCA0RXD	X (2)	0	1
		UCB1STE	X (3)	1	0
		N/A	0	1	1
		Internally tied to DVSS	1		

(1) X = Don't care
(2) Direction controlled by eUSCI_A0 module.
(3) Direction controlled by eUSCI_B1 module.

Copyright © 2015–2018, Texas Instruments Incorporated

Table 6-24. Port P4 (P4.4 to P4.7) Pin Functions

PIN NAME (P4.x)	x	FUNCTION	CONTROL BITS OR SIGNALS (1)		
			P4DIR.x	P4SEL1.x	P4SEL0.x
P4.4/UCB1STE/TA1CLK	4	P4.4 (I/O)	I: 0; O: 1	0	0
		N/A	0	0	1
		Internally tied to DVSS	1		
		UCB1STE	X (2)	1	0
		TA1CLK	0	1	1
		Internally tied to DVSS	1		
P4.5/UCB1CLK/TA1.0	5	P4.5 (I/O)	I: 0; O: 1	0	0
		N/A	0	0	1
		Internally tied to DVSS	1		
		UCB1CLK	X (2)	1	0
		TA1CCI0A	0	1	1
		TA1.0	1		
P4.6/UCB1SIMO/UCB1SDA/TA1.1	6	P4.6 (I/O)	I: 0; O: 1	0	0
		N/A	0	0	1
		Internally tied to DVSS	1		
		UCB1SIMO/UCB1SDA	X (2)	1	0
		TA1CCI1A	0	1	1
		TA1.1	1		
P4.7/UCB1SOMI/UCB1SCL/TA1.2	7	P4.7 (I/O)	I: 0; O: 1	0	0
		N/A	0	0	1
		Internally tied to DVSS	1		
		UCB1SOMI/UCB1SCL	X (2)	1	0
		TA1CCI2A	0	1	1
		TA1.2	1		

(1) X = Don't care
(2) Direction controlled by eUSCI_B1 module.

6.11.22.8 Port P5 (P5.4 to P5.7) Input/Output With Schmitt Trigger

For the port diagram, see Figure 6-1. Table 6-25 summarizes the selection of the pin functions.

Table 6-25. Port P5 (P5.4 to P5.7) Pin Functions

PIN NAME (P5.x)	x	FUNCTION	CONTROL BITS OR SIGNALS (1)		
			P5DIR.x	P5SEL1.x	P5SEL0.x
P5.4/UCA1SIMO/UCA1TXD	4	P5.4 (I/O)	I: 0; O: 1	0	0
		UCA1SIMO/UCA1TXD	X (2)	0	1
		N/A	0	1	0
		Internally tied to DVSS	1		
		N/A	0	1	1
		Internally tied to DVSS	1		
P5.5/UCA1SOMI/UCA1RXD	5	P5.5 (I/O)	I: 0; O: 1	0	0
		UCA1SOMI/UCA1RXD	X (2)	0	1
		N/A	0	1	0
		Internally tied to DVSS	1		
		N/A	0	1	1
		Internally tied to DVSS	1		
P5.6/UCA1CLK	6	P5.6 (I/O)	I: 0; O: 1	0	0
		UCA1CLK	X (2)	0	1
		N/A	0	1	0
		Internally tied to DVSS	1		
		N/A	0	1	1
		Internally tied to DVSS	1		
P5.7/UCA1STE/TB0CLK	7	P5.7 (I/O)	I: 0; O: 1	0	0
		UCA1STE	X (2)	0	1
		N/A	0	1	0
		Internally tied to DVSS	1		
		TB0CLK	0	1	1
		Internally tied to DVSS	1		

(1) X = Don't care
(2) Direction controlled by eUSCI_A1 module.

Copyright © 2015–2018, Texas Instruments Incorporated

6.11.22.9 Port P6 (P6.0 to P6.6) Input/Output With Schmitt Trigger

Figure 6-4 shows the port diagram. Table 6-26 and Table 6-27 summarize the selection of the pin functions.

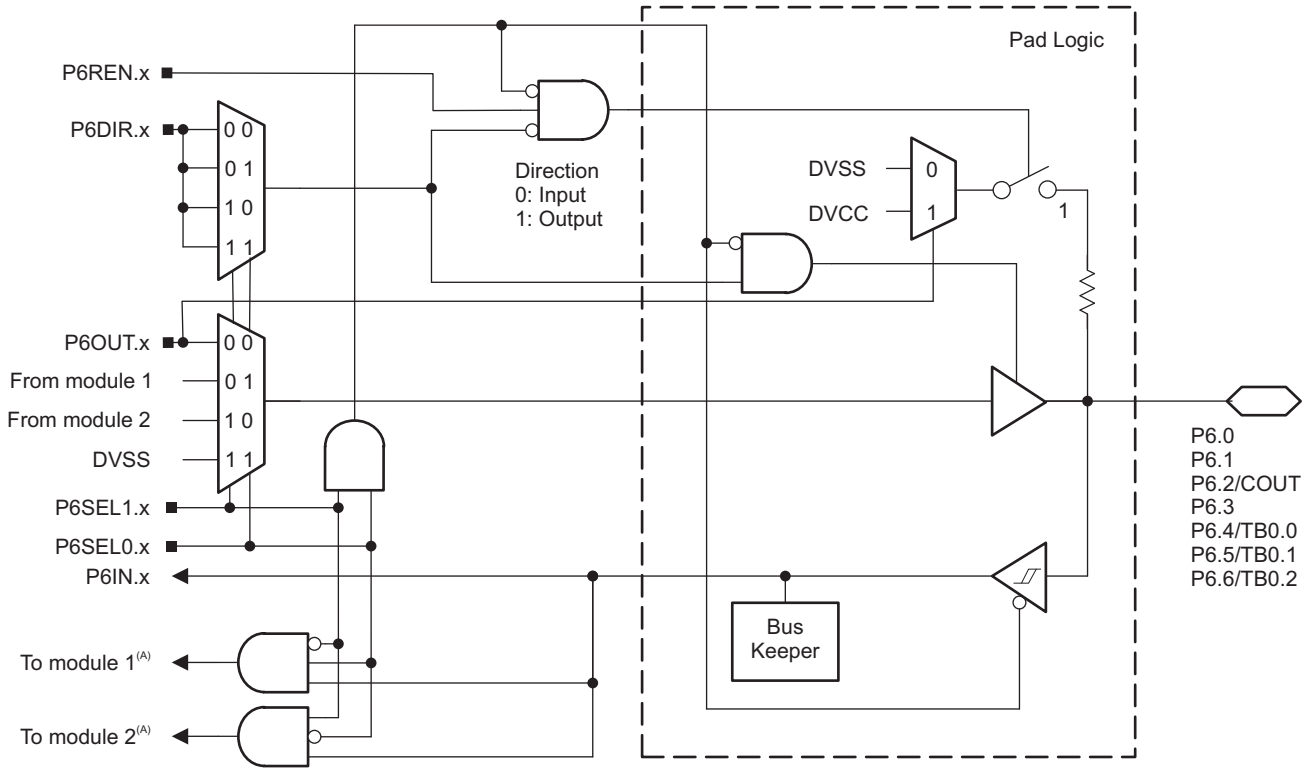

NOTE: Functional representation only.

Figure 6-4. Port P6 (P6.0 to P6.6) Diagram

Table 6-26. Port P6 (P6.0 to P6.2) Pin Functions

PIN NAME (P6.x)	x	FUNCTION	CONTROL BITS OR SIGNALS (1)		
			P6DIR.x	P6SEL1.x	P6SEL0.x
P6.0	0	P6.0 (I/O)	I: 0; O: 1	0	0
		N/A	0	0	1
		Internally tied to DVSS	1		
		N/A	0	1	0
		Internally tied to DVSS	1		
		N/A	X	1	1
P6.1	1	P6.1 (I/O)	I: 0; O: 1	0	0
		N/A	0	0	1
		Internally tied to DVSS	1		
		N/A	0	1	0
		Internally tied to DVSS	1		
		N/A	X	1	1
P6.2/COUT	2	P6.2 (I/O)	I: 0; O: 1	0	0
		N/A	0	0	1
		COUT	1		
		N/A	0	1	0
		Internally tied to DVSS	1		
		N/A	X	1	1

(1) X = Don't care

Copyright © 2015–2018, Texas Instruments Incorporated

Table 6-27. Port P6 (P6.3 to P6.6) Pin Functions

PIN NAME (P6.x)	x	FUNCTION	CONTROL BITS OR SIGNALS (1)		
			P6DIR.x	P6SEL1.x	P6SEL0.x
P6.3	3	P6.3 (I/O)	I: 0; O: 1	0	0
		N/A	0	0	1
		Internally tied to DVSS	1		
		N/A	0	1	0
		Internally tied to DVSS	1		
		N/A	X	1	1
P6.4/TB0.0	4	P6.4 (I/O)	I: 0; O: 1	0	0
		TB0CCI0B	0	0	1
		TB0.0	1		
		N/A	0	1	0
		Internally tied to DVSS	1		
		N/A	X	1	1
P6.5/TB0.1	5	P6.5 (I/O)	I: 0; O: 1	0	0
		TB0CCI1A	0	0	1
		TB0.1	1		
		N/A	0	1	0
		Internally tied to DVSS	1		
		N/A	X	1	1
P6.6/TB0.2	6	P6.6 (I/O)	I: 0; O: 1	0	0
		TB0CCI2A	0	0	1
		TB0.2	1		
		N/A	0	1	0
		Internally tied to DVSS	1		
		N/A	X	1	1

(1) X = Don't care

6.11.22.10 Port P7 (P7.0 to P7.4) Input/Output With Schmitt Trigger

For the port diagram, see Figure 6-1. Table 6-28 and Table 6-29 summarize the selection of the pin functions.

Table 6-28. Port P7 (P7.0 to P7.3) Pin Functions

PIN NAME (P7.x)	x	FUNCTION	CONTROL BITS OR SIGNALS (1)		
			P7DIR.x	P7SEL1.x	P7SEL0.x
P7.0/TA0CLK	0	P7.0 (I/O)	I: 0; O: 1	0	0
		TA0CLK	0	0	1
		Internally tied to DVSS	1		
		N/A	0	1	0
		Internally tied to DVSS	1		
		N/A	0	1	1
		Internally tied to DVSS	1		
P7.1/TA0.0/ACLK	1	P7.1 (I/O)	I: 0; O: 1	0	0
		TA0CCI0B	0	0	1
		TA0.0	1		
		N/A	0	1	0
		Internally tied to DVSS	1		
		N/A	0	1	1
		ACLK	1		
P7.2/TA0.1	2	P7.2 (I/O)	I: 0; O: 1	0	0
		TA0CCI1A	0	0	1
		TA0.1	1		
		N/A	0	1	0
		Internally tied to DVSS	1		
		N/A	0	1	1
		N/A	1		
P7.3/TA0.2	3	P7.3 (I/O)	I: 0; O: 1	0	0
		TA0CCI2A	0	0	1
		TA0.2	1		
		N/A	0	1	0
		Internally tied to DVSS	1		
		N/A	0	1	1
		Internally tied to DVSS	1		

(1) X = Don't care

Table 6-29. Port P7 (P7.4) Pin Functions

PIN NAME (P7.x)	x	FUNCTION	CONTROL BITS OR SIGNALS (1)		
			P7DIR.x	P7SEL1.x	P7SEL0.x
P7.4/SMCLK	4	P7.4 (I/O)	I: 0; O: 1	0	0
		N/A	0	0	1
		Internally tied to DVSS	1		
		N/A	0	1	0
		Internally tied to DVSS	1		
		N/A	0	1	1
		SMCLK	1		

(1) X = Don't care

Copyright © 2015–2018, Texas Instruments Incorporated

6.11.22.11 Port P9 (P9.4 to P9.7) Input/Output With Schmitt Trigger

Figure 6-5 shows the port diagram. Table 6-30 summarizes the selection of the pin functions.

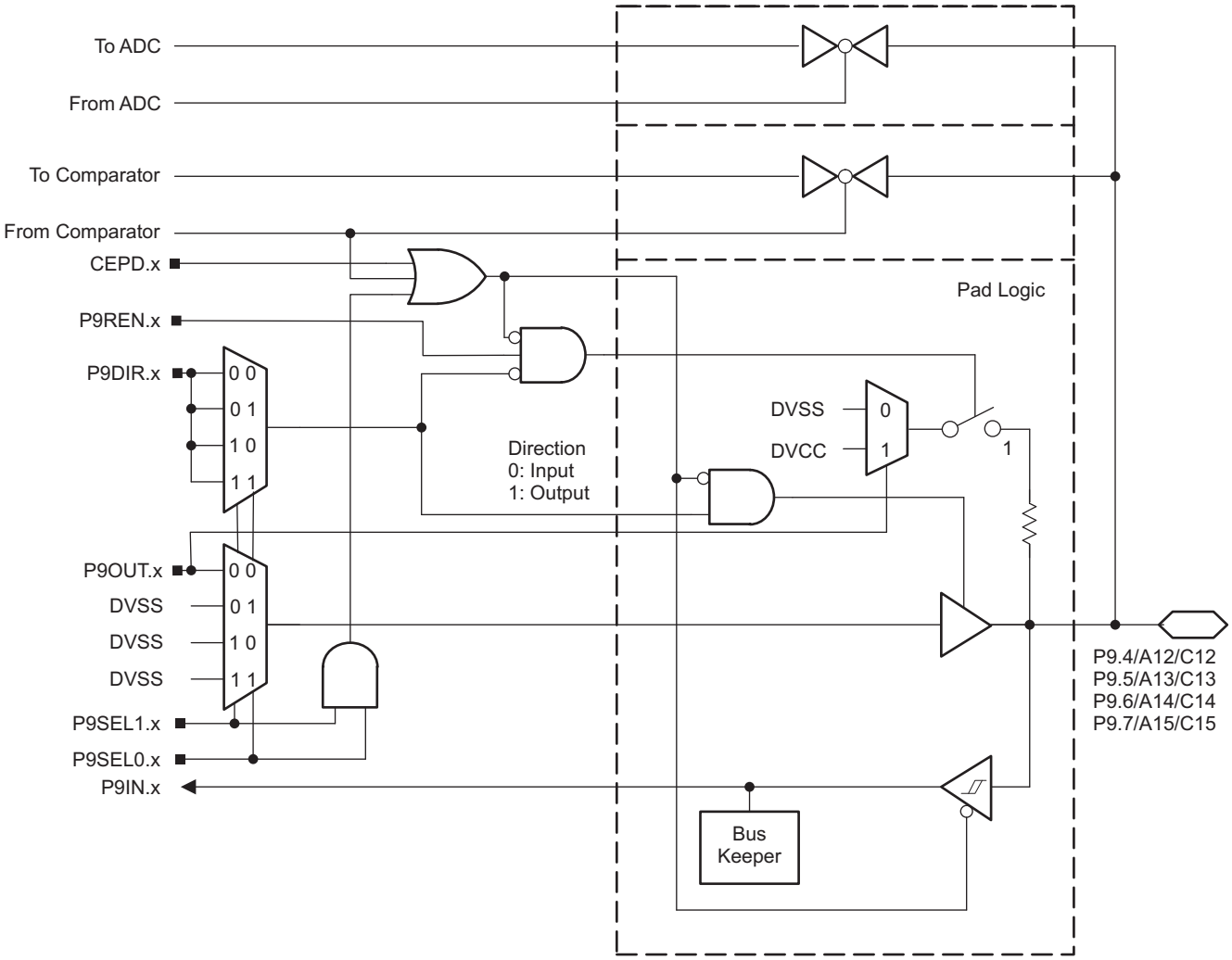

NOTE: Functional representation only.

Figure 6-5. Port P9 (P9.4 to P9.7) Diagram

Table 6-30. Port P9 (P9.4 to P9.7) Pin Functions

PIN NAME (P9.x)	x	FUNCTION	CONTROL BITS OR SIGNALS (1)		
			P9DIR.x	P9SEL1.x	P9SEL0.x
P9.4/A12/C12	4	P9.4 (I/O)	I: 0; O: 1	0	0
		N/A	0	0	1
		Internally tied to DVSS	1		
		N/A	0	1	0
		Internally tied to DVSS	1		
		A12/C12 (2) (3)	X	1	1
P9.5/A13/C13	5	P9.5 (I/O)	I: 0; O: 1	0	0
		N/A	0	0	1
		Internally tied to DVSS	1		
		N/A	0	1	0
		Internally tied to DVSS	1		
		A13/C13 (2) (3)	X	1	1
P9.6/A14/C14	6	P9.6 (I/O)	I: 0; O: 1	0	0
		N/A	0	0	1
		Internally tied to DVSS	1		
		N/A	0	1	0
		Internally tied to DVSS	1		
		A14/C14 (2) (3)	X	1	1
P9.7/A15/C15	7	P9.7 (I/O)	I: 0; O: 1	0	0
		N/A	0	0	1
		Internally tied to DVSS	1		
		N/A	0	1	0
		Internally tied to DVSS	1		
		A15/C15 (2) (3)	X	1	1

(1) X = Don't care
(2) Setting P9SEL1.x and P9SEL0.x disables the output driver and the input Schmitt trigger to prevent parasitic cross currents when applying analog signals.
(3) Setting the CEPD.x bit of the comparator disables the output driver and the input Schmitt trigger to prevent parasitic cross currents when applying analog signals. Selecting the Cx input pin to the comparator multiplexer with the input select bits in the comparator module automatically disables output driver and input buffer for that pin, regardless of the state of the associated CEPD.x bit.

Copyright © 2015–2018, Texas Instruments Incorporated

6.11.22.12 Port PJ (PJ.4 and PJ.5) Input/Output With Schmitt Trigger

Figure 6-6 and Figure 6-7 show the port diagrams. Table 6-31 summarizes the selection of the pin functions.

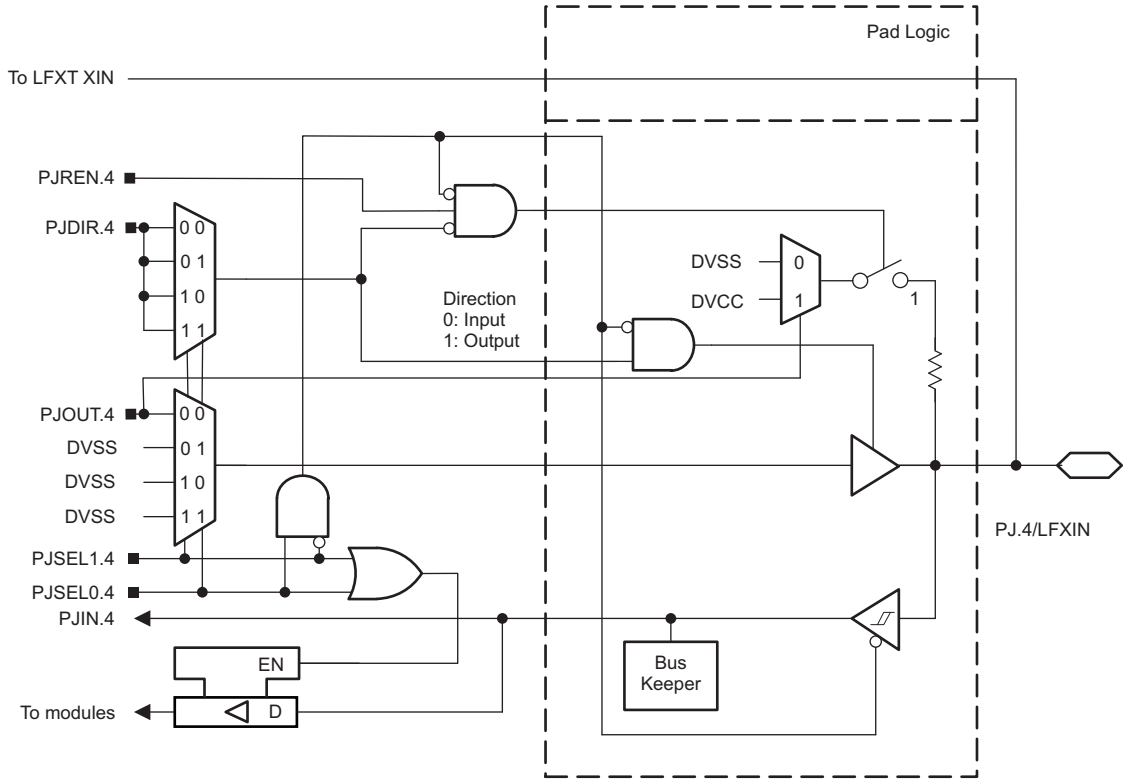

NOTE: Functional representation only.

Figure 6-6. Port PJ (PJ.4) Diagram

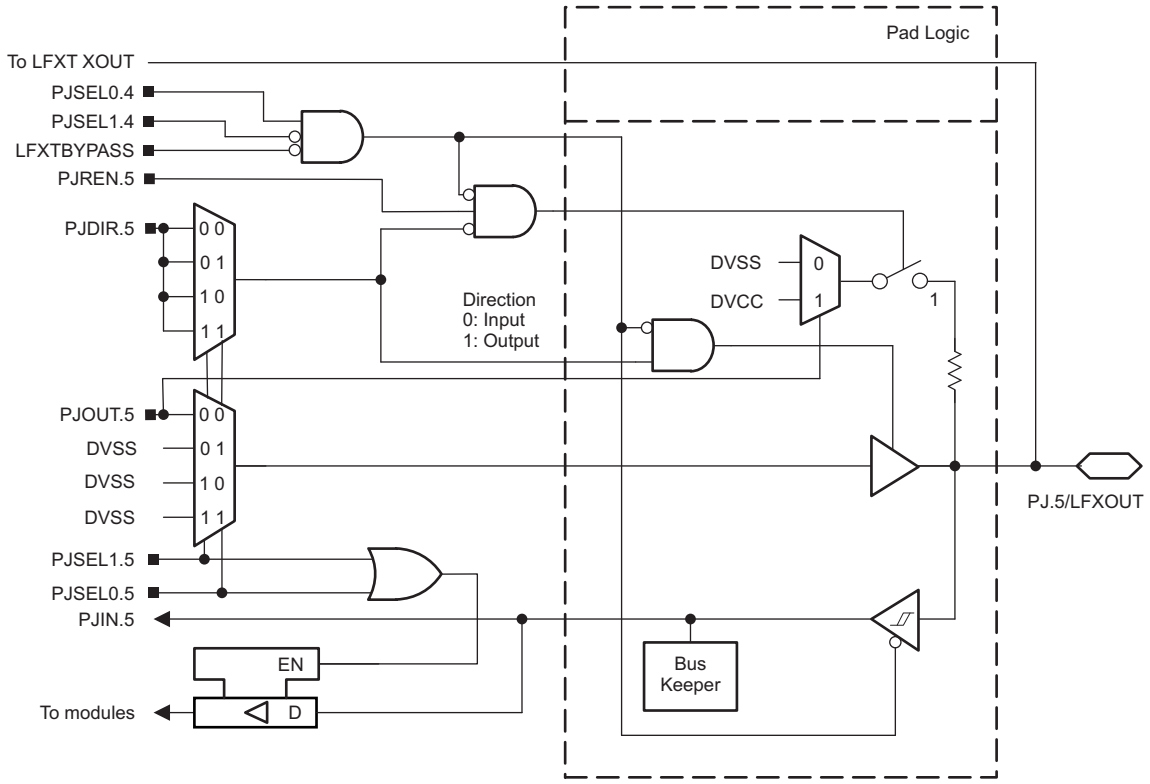

NOTE: Functional representation only.

Figure 6-7. Port PJ (PJ.5) Diagram

Copyright © 2015–2018, Texas Instruments Incorporated

Table 6-31. Port PJ (PJ.4 and PJ.5) Pin Functions

PIN NAME (PJ.x)	x	FUNCTION	CONTROL BITS OR SIGNALS (1)					
			PJDIR.x	PJSEL1.5	PJSEL0.5	PJSEL1.4	PJSEL0.4	LFXTBYPASS
PJ.4/LFXIN	4	PJ.4 (I/O)	I: 0; O: 1	X	X	0	0	X
		N/A	0	X	X	1	X	X
		Internally tied to DVSS	1					
		LFXIN crystal mode (2)	X	X	X	0	1	0
		LFXIN bypass mode (2)	X	X	X	0	1	1
PJ.5/LFXOUT	5	PJ.5 (I/O)	I: 0; O: 1	0	0	0	0	0
						1	X	
						X	X	1 (3)
		N/A	0	See (4)	See (4)	0	0	0
						1	X	
						X	X	1 (3)
		Internally tied to DVSS	1	See (4)	See (4)	0	0	0
						1	X	
						X	X	1 (3)
		LFXOUT crystal mode (2)	X	X	X	0	1	0

(1) X = Don't care
(2) Setting PJSEL1.4 = 0 and PJSEL0.4 = 1 causes the general-purpose I/O to be disabled. When LFXTBYPASS = 0, PJ.4 and PJ.5 are configured for crystal operation and PJSEL1.5 and PJSEL0.5 are don't care. When LFXTBYPASS = 1, PJ.4 is configured for bypass operation and PJ.5 is configured as general-purpose I/O.
(3) When PJ.4 is configured in bypass mode, PJ.5 is configured as general-purpose I/O.
(4) With PJSEL0.5 = 1 or PJSEL1.5 =1 the general-purpose I/O functionality is disabled. No input function is available. Configured as output, the pin is actively pulled to zero.

6.11.22.13 Port PJ (PJ.6 and PJ.7) Input/Output With Schmitt Trigger

Figure 6-8 and Figure 6-9 show the port diagrams. Table 6-32 summarizes the selection of the pin functions.

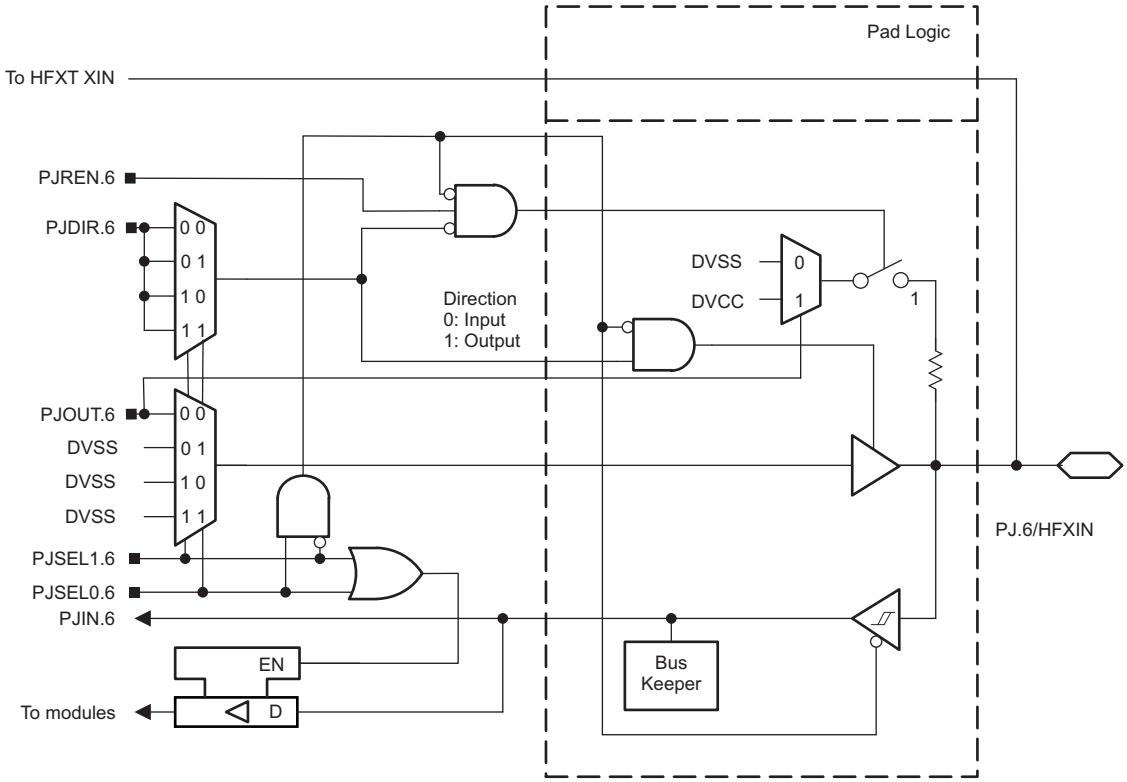

NOTE: Functional representation only.

Figure 6-8. Port PJ (PJ.6) Diagram

Copyright © 2015–2018, Texas Instruments Incorporated

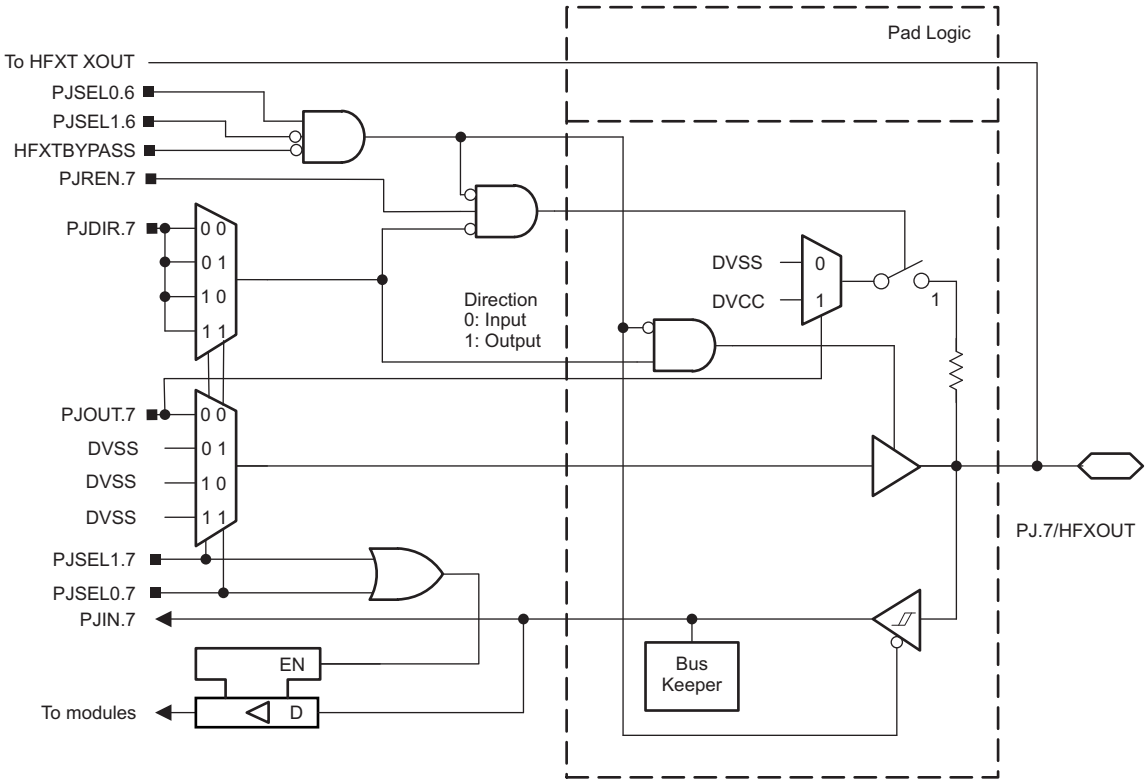

NOTE: Functional representation only.

Figure 6-9. Port PJ (PJ.7) Diagram

Table 6-32. Port PJ (PJ.6 and PJ.7) Pin Functions

PIN NAME (PJ.x)	x	FUNCTION	CONTROL BITS OR SIGNALS (1)					
			PJDIR.x	PJSEL1.7	PJSEL0.7	PJSEL1.6	PJSEL0.6	HFXTBYPASS
PJ.6/HFXIN	6	PJ.6 (I/O)	I: 0; O: 1	X	X	0	0	X
		N/A	0	X	X	1	X	X
		Internally tied to DVSS	1					
		HFXIN crystal mode (2)	X	X	X	0	1	0
		HFXIN bypass mode (2)	X	X	X	0	1	1
PJ.7/HFXOUT	7	PJ.7 (I/O)	I: 0; O: 1	0	0	0	0	0
						1	X	
						X	X	1 (3)
		N/A	0	See (4)	See (4)	0	0	0
						1	X	
						X	X	1 (3)
		Internally tied to DVSS	1	See (4)	See (4)	0	0	0
						1	X	
						X	X	1 (3)
		HFXOUT crystal mode (2)	X	X	X	0	1	0

(1) X = Don't care
(2) Setting PJSEL1.6 = 0 and PJSEL0.6 = 1 causes the general-purpose I/O to be disabled. When HFXTBYPASS = 0, PJ.6 and PJ.7 are configured for crystal operation and PJSEL1.6 and PJSEL0.7 are don't care. When HFXTBYPASS = 1, PJ.6 is configured for bypass operation and PJ.7 is configured as general-purpose I/O.
(3) When PJ.6 is configured in bypass mode, PJ.7 is configured as general-purpose I/O.
(4) With PJSEL0.7 = 1 or PJSEL1.7 = 1 the general-purpose I/O functionality is disabled. No input function is available. Configured as output, the pin is actively pulled to zero.

Copyright © 2015–2018, Texas Instruments Incorporated

6.11.22.14 Port PJ (PJ.0 to PJ.3) JTAG Pins TDO, TMS, TCK, TDI/TCLK, Input/Output With Schmitt Trigger

Figure 6-10 shows the port diagram. Table 6-33 summarizes the selection of the pin functions.

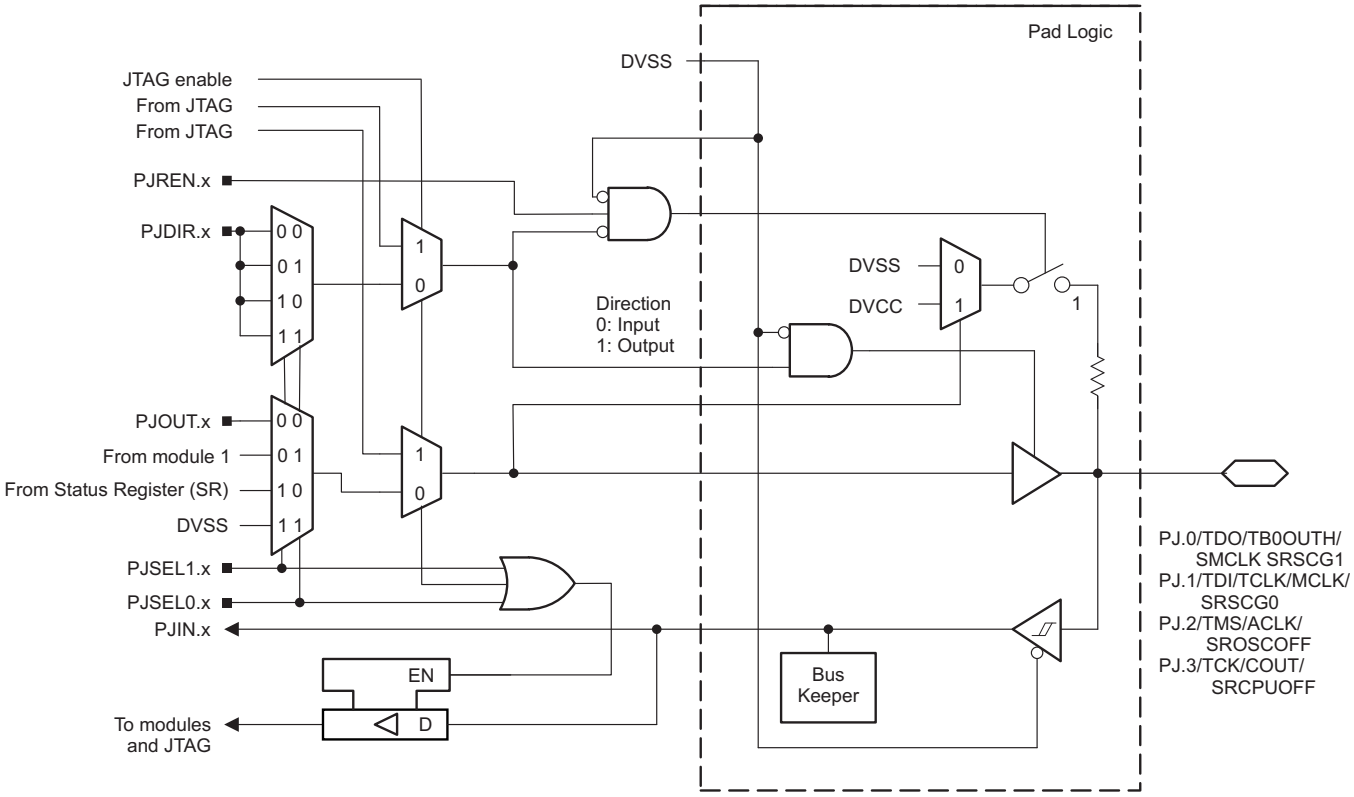

NOTE: Functional representation only.

Figure 6-10. Port PJ (PJ.0 to PJ.3) Diagram

Table 6-33. Port PJ (PJ.0 to PJ.3) Pin Functions

PIN NAME (PJ.x)	x	FUNCTION	CONTROL BITS OR SIGNALS (1)		
			PJDIR.x	PJSEL1.x	PJSEL0.x
PJ.0/TDO/TB0OUTH/ SMCLK/SRSCG1	0	PJ.0 (I/O) (2)	I: 0; O: 1	0	0
		TDO (3)	X	X	X
		TB0OUTH	0	0	1
		SMCLK (4)	1		
		N/A	0	1	0
		CPU Status Register Bit SCG1	1		
		N/A	0	1	1
		Internally tied to DVSS	1		
PJ.1/TDI/TCLK/MCLK/ SRSCG0	1	PJ.1 (I/O) (2)	I: 0; O: 1	0	0
		TDI/TCLK (3) (5)	X	X	X
		N/A	0	0	1
		MCLK	1		
		N/A	0	1	0
		CPU Status Register Bit SCG0	1		
		N/A	0	1	1
		Internally tied to DVSS	1		
PJ.2/TMS/ACLK/ SROSCOFF	2	PJ.2 (I/O) (2)	I: 0; O: 1	0	0
		TMS (3) (5)	X	X	X
		N/A	0	0	1
		ACLK	1		
		N/A	0	1	0
		CPU Status Register Bit OSCOFF	1		
		N/A	0	1	1
		Internally tied to DVSS	1		
PJ.3/TCK/COUT/ SRCPUOFF	3	PJ.3 (I/O) (2)	I: 0; O: 1	0	0
		TCK (3) (5)	X	X	X
		N/A	0	0	1
		COUT	1		
		N/A	0	1	0
		CPU Status Register Bit CPUOFF	1		
		N/A	0	1	1
		Internally tied to DVSS	1		

(1) X = Don't care
(2) Default condition
(3) The pin direction is controlled by the JTAG module. JTAG mode selection is made by the SYS module or by the Spy-Bi-Wire 4-wire entry sequence. Neither PJSEL1.x and PJSEL0.x nor CEPD.x bits have an effect in these cases.
(4) Do not use this pin as SMCLK output if the TB0OUTH functionality is used on any other pin. Select an alternative SMCLK output pin.
(5) In JTAG mode, pullups are activated automatically on TMS, TCK, and TDI/TCLK. PJREN.x are don't care.

Copyright © 2015–2018, Texas Instruments Incorporated

6.12 Device Descriptors (TLV)

Table 6-34 summarizes the Device IDs. Table 6-35 list the contents of the device descriptor tag-length-value (TLV) structure.

Table 6-34. Device ID

DEVICE	PACKAGE	DEVICE ID	
		At 01A05h	At 01A04h
MSP430FR5970	PM and RGC	82h	5Bh
MSP430FR5972(1)	PM and RGC	82h	5Dh
MSP430FR5922(1)	PM and RGC	82h	61h
	DGG	82h	62h
MSP430FR5870	PM and RGC	82h	5Eh
MSP430FR5872(1)	PM and RGC	82h	60h

Table 6-35. Device Descriptor Table (1)

	DESCRIPTION	MSP430FRxxxx (UART BSL)		MSP430FRxxxx1 (I^2C BSL)	
		ADDRESS	VALUE	ADDRESS	VALUE
Info Block	Info length	01A00h	06h	01A00h	06h
	CRC length	01A01h	06h	01A01h	06h
	CRC value	01A02h	Per unit	01A02h	Per unit
		01A03h	Per unit	01A03h	Per unit
	Device ID	01A04h	See Table 6-34.	01A04h	See Table 6-34.
	Device ID	01A05h		01A05h	
	Hardware revision	01A06h	Per unit	01A06h	Per unit
	Firmware revision	01A07h	Per unit	01A07h	Per unit
Die Record	Die record tag	01A08h	08h	01A08h	08h
	Die record length	01A09h	0Ah	01A09h	0Ah
	Lot/wafer ID	01A0Ah	Per unit	01A0Ah	Per unit
		01A0Bh	Per unit	01A0Bh	Per unit
		01A0Ch	Per unit	01A0Ch	Per unit
		01A0Dh	Per unit	01A0Dh	Per unit
	Die X position	01A0Eh	Per unit	01A0Eh	Per unit
		01A0Fh	Per unit	01A0Fh	Per unit
	Die Y position	01A10h	Per unit	01A10h	Per unit
		01A11h	Per unit	01A11h	Per unit
	Test results	01A12h	Per unit	01A12h	Per unit
		01A13h	Per unit	01A13h	Per unit

(1) NA = Not applicable, Per unit = content can differ from device to device

Copyright © 2015–2018, Texas Instruments Incorporated

Table 6-35. Device Descriptor Table [1] (continued)

	DESCRIPTION	MSP430FRxxxx (UART BSL)		MSP430FRxxxx1 (I^2C BSL)	
		ADDRESS	VALUE	ADDRESS	VALUE
ADC12B Calibration	ADC12B calibration tag	01A14h	11h	01A14h	11h
	ADC12B calibration length	01A15h	10h	01A15h	10h
	ADC gain factor[2]	01A16h	Per unit	01A16h	Per unit
		01A17h	Per unit	01A17h	Per unit
	ADC offset[3]	01A18h	Per unit	01A18h	Per unit
		01A19h	Per unit	01A19h	Per unit
	ADC 1.2-V reference Temperature sensor 30°C	01A1Ah	Per unit	01A1Ah	Per unit
		01A1Bh	Per unit	01A1Bh	Per unit
	ADC 1.2-V reference Temperature sensor 85°C	01A1Ch	Per unit	01A1Ch	Per unit
		01A1Dh	Per unit	01A1Dh	Per unit
	ADC 2.0-V reference Temperature sensor 30°C	01A1Eh	Per unit	01A1Eh	Per unit
		01A1Fh	Per unit	01A1Fh	Per unit
	ADC 2.0-V reference Temperature sensor 85°C	01A20h	Per unit	01A20h	Per unit
		01A21h	Per unit	01A21h	Per unit
	ADC 2.5-V reference Temperature sensor 30°C	01A22h	Per unit	01A22h	Per unit
		01A23h	Per unit	01A23h	Per unit
	ADC 2.5-V reference Temperature sensor 85°C	01A24h	Per unit	01A24h	Per unit
		01A25h	Per unit	01A25h	Per unit
REF Calibration	REF calibration tag	01A26h	12h	01A26h	12h
	REF calibration length	01A27h	06h	01A27h	06h
	REF 1.2-V reference	01A28h	Per unit	01A28h	Per unit
		01A29h	Per unit	01A29h	Per unit
	REF 2.0-V reference	01A2Ah	Per unit	01A2Ah	Per unit
		01A2Bh	Per unit	01A2Bh	Per unit
	REF 2.5-V reference	01A2Ch	Per unit	01A2Ch	Per unit
		01A2Dh	Per unit	01A2Dh	Per unit

(2) ADC gain: The gain correction factor is measured using the internal voltage reference with REFOUT = 0. Other settings (for example, with REFOUT = 1) can result in different correction factors.
(3) ADC offset: The offset correction factor is measured using the internal 2.5-V reference.

Copyright © 2015–2018, Texas Instruments Incorporated

Table 6-35. Device Descriptor Table [(1)] (continued)

	DESCRIPTION	MSP430FRxxxx (UART BSL)		MSP430FRxxxx1 (I^2C BSL)	
		ADDRESS	VALUE	ADDRESS	VALUE
Random Number	128-bit random number tag	01A2Eh	15h	01A2Eh	15h
	Random number length	01A2Fh	10h	01A2Fh	10h
	128-bit random number[(4)]	01A30h	Per unit	01A30h	Per unit
		01A31h	Per unit	01A31h	Per unit
		01A32h	Per unit	01A32h	Per unit
		01A33h	Per unit	01A33h	Per unit
		01A34h	Per unit	01A34h	Per unit
		01A35h	Per unit	01A35h	Per unit
		01A36h	Per unit	01A36h	Per unit
		01A37h	Per unit	01A37h	Per unit
		01A38h	Per unit	01A38h	Per unit
		01A39h	Per unit	01A39h	Per unit
		01A3Ah	Per unit	01A3Ah	Per unit
		01A3Bh	Per unit	01A3Bh	Per unit
		01A3Ch	Per unit	01A3Ch	Per unit
		01A3Dh	Per unit	01A3Dh	Per unit
		01A3Eh	Per unit	01A3Eh	Per unit
		01A3Fh	Per unit	01A3Fh	Per unit
BSL Configuration	BSL tag	01A40h	1Ch	01A40h	1Ch
	BSL length	01A41h	02h	01A41h	02h
	BSL interface	01A42h	00h	01A42h	01h
	BSL interface configuration	01A43h	00h	01A43h	48h

(4) 128-bit random number: The random number is generated during production test using the CryptGenRandom() function from Microsoft®.

6.13 Memory

Table 6-36 summarizes the memory map for all devices.

Table 6-36. Memory Organization(1)

		MSP430FR5972(1) MSP430FR5922(1) MSP430FR5872(1)	MSP430FR5970 MSP430FR5870
Memory (FRAM) Main: interrupt vectors and signatures Main: code memory	Total Size	63KB 00FFFFh to 00FF80h 013FFFh to 004400h	32KB 00FFFFh to 00FF80h 00FF7Fh to 008000h
RAM	Sect 1	2KB 0023FFh to 001C00h	2KB 0023FFh to 001C00h
Device Descriptor Info (TLV) (FRAM)		256 bytes 001AFFh to 001A00h	256 bytes 001AFFh to 001A00h
Information memory (FRAM)	Info A	128 bytes 0019FFh to 001980h	128 bytes 0019FFh to 001980h
	Info B	128 bytes 00197Fh to 001900h	128 bytes 00197Fh to 001900h
	Info C	128 bytes 0018FFh to 001880h	128 bytes 0018FFh to 001880h
	Info D	128 bytes 00187Fh to 001800h	128 bytes 00187Fh to 001800h
Bootloader (BSL) memory (ROM)	BSL 3	512 bytes 0017FFh to 001600h	512 bytes 0017FFh to 001600h
	BSL 2	512 bytes 0015FFh to 001400h	512 bytes 0015FFh to 001400h
	BSL 1	512 bytes 0013FFh to 001200h	512 bytes 0013FFh to 001200h
	BSL 0	512 bytes 0011FFh to 001000h	512 bytes 0011FFh to 001000h
Peripherals	Size	4KB 000FFFh to 000020h	4KB 000FFFh to 000020h
Tiny RAM	Size	26 bytes 000001Fh to 000006h	26 bytes 000001Fh to 000006h
Reserved (Read Only)(2)	Size	6 bytes 000005h to 000000h	6 bytes 000005h to 000000h

(1) All address space not listed is considered vacant memory.
(2) Read as: D032h at 00h (Opcode: BIS.W LPM4, SR), 00F0h at 02h (Opcode: BIS.W LPM4, SR), 3FFFh at 04h (Opcode: JMP$)

Copyright © 2015–2018, Texas Instruments Incorporated

6.13.1 Peripheral File Map

Table 6-37 lists the base address and offset range for the registers of supported peripheral modules.

Table 6-37. Peripherals

MODULE NAME	BASE ADDRESS	OFFSET ADDRESS RANGE
Special Functions (see Table 6-38)	0100h	000h to 01Fh
PMM (see Table 6-39)	0120h	000h to 01Fh
FRAM Control (see Table 6-40)	0140h	000h to 00Fh
CRC16 (see Table 6-41)	0150h	000h to 007h
RAM Controller (see Table 6-42)	0158h	000h to 001h
Watchdog (see Table 6-43)	015Ch	000h to 001h
CS (see Table 6-44)	0160h	000h to 00Fh
SYS (see Table 6-45)	0180h	000h to 01Fh
Shared Reference (see Table 6-46)	01B0h	000h to 001h
Port P1, P2 (see Table 6-47)	0200h	000h to 01Fh
Port P3, P4 (see Table 6-48)	0220h	000h to 01Fh
Port P5, P6 (see Table 6-49)	0240h	000h to 01Fh
Port P7 (see Table 6-50)	0260h	000h to 01Fh
Port P9 (see Table 6-51)	0280h	000h to 01Fh
Port PJ (see Table 6-52)	0320h	000h to 01Fh
Timer_A TA0 (see Table 6-53)	0340h	000h to 02Fh
Timer_A TA1 (see Table 6-54)	0380h	000h to 02Fh
Timer_B TB0 (see Table 6-55)	03C0h	000h to 02Fh
Timer_A TA2 (see Table 6-56)	0400h	000h to 02Fh
Capacitive Touch I/O 0 (see Table 6-57)	0430h	000h to 00Fh
Timer_A TA3 (see Table 6-58)	0440h	000h to 02Fh
Capacitive Touch I/O 1 (see Table 6-59)	0470h	000h to 00Fh
Real-Time Clock (RTC_C) (see Table 6-60)	04A0h	000h to 01Fh
32-Bit Hardware Multiplier (see Table 6-61)	04C0h	000h to 02Fh
DMA General Control (see Table 6-62)	0500h	000h to 00Fh
DMA Channel 0 (see Table 6-62)	0510h	000h to 00Fh
DMA Channel 1 (see Table 6-62)	0520h	000h to 00Fh
DMA Channel 2 (see Table 6-62)	0530h	000h to 00Fh
MPU Control (see Table 6-63)	05A0h	000h to 00Fh
eUSCI_A0 (see Table 6-64)	05C0h	000h to 01Fh
eUSCI_A1 (see Table 6-65)	05E0h	000h to 01Fh
eUSCI_B0 (see Table 6-66)	0640h	000h to 02Fh
eUSCI_B1 (see Table 6-67)	0680h	000h to 02Fh
ADC12_B (see Table 6-68)	0800h	000h to 09Fh
Comparator_E (see Table 6-69)	08C0h	000h to 00Fh
CRC32 (see Table 6-70)	0980h	000h to 02Fh
AES (see Table 6-71)	09C0h	000h to 00Fh

Table 6-38. Special Function Registers (Base Address: 0100h)

REGISTER DESCRIPTION	REGISTER	OFFSET
SFR interrupt enable	SFRIE1	00h
SFR interrupt flag	SFRIFG1	02h
SFR reset pin control	SFRRPCR	04h

Table 6-39. PMM Registers (Base Address: 0120h)

REGISTER DESCRIPTION	REGISTER	OFFSET
PMM control 0	PMMCTL0	00h
PMM interrupt flags	PMMIFG	0Ah
PM5 control 0	PM5CTL0	10h

Table 6-40. FRAM Control Registers (Base Address: 0140h)

REGISTER DESCRIPTION	REGISTER	OFFSET
FRAM control 0	FRCTL0	00h
General control 0	GCCTL0	04h
General control 1	GCCTL1	06h

Table 6-41. CRC16 Registers (Base Address: 0150h)

REGISTER DESCRIPTION	REGISTER	OFFSET
CRC data input	CRCDI	00h
CRC data input reverse byte	CRCDIRB	02h
CRC initialization and result	CRCINIRES	04h
CRC result reverse byte	CRCRESR	06h

Table 6-42. RAM Controller Registers (Base Address: 0158h)

REGISTER DESCRIPTION	REGISTER	OFFSET
RAM controller control 0	RCCTL0	00h

Table 6-43. Watchdog Registers (Base Address: 015Ch)

REGISTER DESCRIPTION	REGISTER	OFFSET
Watchdog timer control	WDTCTL	00h

Table 6-44. CS Registers (Base Address: 0160h)

REGISTER DESCRIPTION	REGISTER	OFFSET
CS control 0	CSCTL0	00h
CS control 1	CSCTL1	02h
CS control 2	CSCTL2	04h
CS control 3	CSCTL3	06h
CS control 4	CSCTL4	08h
CS control 5	CSCTL5	0Ah
CS control 6	CSCTL6	0Ch

Table 6-45. SYS Registers (Base Address: 0180h)

REGISTER DESCRIPTION	REGISTER	OFFSET
System control	SYSCTL	00h
JTAG mailbox control	SYSJMBC	06h

Copyright © 2015–2018, Texas Instruments Incorporated

Table 6-45. SYS Registers (Base Address: 0180h) (continued)

REGISTER DESCRIPTION	REGISTER	OFFSET
JTAG mailbox input 0	SYSJMBI0	08h
JTAG mailbox input 1	SYSJMBI1	0Ah
JTAG mailbox output 0	SYSJMBO0	0Ch
JTAG mailbox output 1	SYSJMBO1	0Eh
User NMI vector generator	SYSUNIV	1Ah
System NMI vector generator	SYSSNIV	1Ch
Reset vector generator	SYSRSTIV	1Eh

Table 6-46. Shared Reference Registers (Base Address: 01B0h)

REGISTER DESCRIPTION	REGISTER	OFFSET
Shared reference control	REFCTL	00h

Table 6-47. Port P1, P2 Registers (Base Address: 0200h)

REGISTER DESCRIPTION	REGISTER	OFFSET
Port P1 input	P1IN	00h
Port P1 output	P1OUT	02h
Port P1 direction	P1DIR	04h
Port P1 resistor enable	P1REN	06h
Port P1 selection 0	P1SEL0	0Ah
Port P1 selection 1	P1SEL1	0Ch
Port P1 interrupt vector word	P1IV	0Eh
Port P1 complement selection	P1SELC	16h
Port P1 interrupt edge select	P1IES	18h
Port P1 interrupt enable	P1IE	1Ah
Port P1 interrupt flag	P1IFG	1Ch
Port P2 input	P2IN	01h
Port P2 output	P2OUT	03h
Port P2 direction	P2DIR	05h
Port P2 resistor enable	P2REN	07h
Port P2 selection 0	P2SEL0	0Bh
Port P2 selection 1	P2SEL1	0Dh
Port P2 complement selection	P2SELC	17h
Port P2 interrupt vector word	P2IV	1Eh
Port P2 interrupt edge select	P2IES	19h
Port P2 interrupt enable	P2IE	1Bh
Port P2 interrupt flag	P2IFG	1Dh

Table 6-48. Port P3, P4 Registers (Base Address: 0220h)

REGISTER DESCRIPTION	REGISTER	OFFSET
Port P3 input	P3IN	00h
Port P3 output	P3OUT	02h
Port P3 direction	P3DIR	04h
Port P3 resistor enable	P3REN	06h
Port P3 selection 0	P3SEL0	0Ah
Port P3 selection 1	P3SEL1	0Ch
Port P3 interrupt vector word	P3IV	0Eh

Copyright © 2015–2018, Texas Instruments Incorporated

Table 6-48. Port P3, P4 Registers (Base Address: 0220h) (continued)

REGISTER DESCRIPTION	REGISTER	OFFSET
Port P3 complement selection	P3SELC	16h
Port P3 interrupt edge select	P3IES	18h
Port P3 interrupt enable	P3IE	1Ah
Port P3 interrupt flag	P3IFG	1Ch
Port P4 input	P4IN	01h
Port P4 output	P4OUT	03h
Port P4 direction	P4DIR	05h
Port P4 resistor enable	P4REN	07h
Port P4 selection 0	P4SEL0	0Bh
Port P4 selection 1	P4SEL1	0Dh
Port P4 complement selection	P4SELC	17h
Port P4 interrupt vector word	P4IV	1Eh
Port P4 interrupt edge select	P4IES	19h
Port P4 interrupt enable	P4IE	1Bh
Port P4 interrupt flag	P4IFG	1Dh

Table 6-49. Port P5, P6 Registers (Base Address: 0240h)

REGISTER DESCRIPTION	REGISTER	OFFSET
Port P5 input	P5IN	00h
Port P5 output	P5OUT	02h
Port P5 direction	P5DIR	04h
Port P5 resistor enable	P5REN	06h
Port P5 selection 0	P5SEL0	0Ah
Port P5 selection 1	P5SEL1	0Ch
Reserved		0Eh
Port P5 complement selection	P5SELC	16h
Reserved		18h
Reserved		1Ah
Reserved		1Ch
Port P6 input	P6IN	01h
Port P6 output	P6OUT	03h
Port P6 direction	P6DIR	05h
Port P6 resistor enable	P6REN	07h
Port P6 selection 0	P6SEL0	0Bh
Port P6 selection 1	P6SEL1	0Dh
Port P6 complement selection	P6SELC	17h
Reserved		1Eh
Reserved		19h
Reserved		1Bh
Reserved		1Dh

Table 6-50. Port P7 Registers (Base Address: 0260h)

REGISTER DESCRIPTION	REGISTER	OFFSET
Port P7 input	P7IN	00h
Port P7 output	P7OUT	02h
Port P7 direction	P7DIR	04h
Port P7 resistor enable	P7REN	06h

Copyright © 2015–2018, Texas Instruments Incorporated

Table 6-50. Port P7 Registers (Base Address: 0260h) (continued)

REGISTER DESCRIPTION	REGISTER	OFFSET
Port P7 selection 0	P7SEL0	0Ah
Port P7 selection 1	P7SEL1	0Ch
Reserved		0Eh
Port P7 complement selection	P7SELC	16h
Reserved		18h
Reserved		1Ah
Reserved		1Ch

Table 6-51. Port P9 Registers (Base Address: 0280h)

REGISTER DESCRIPTION	REGISTER	OFFSET
Port P9 input	P9IN	00h
Port P9 output	P9OUT	02h
Port P9 direction	P9DIR	04h
Port P9 resistor enable	P9REN	06h
Port P9 selection 0	P9SEL0	0Ah
Port P9 selection 1	P9SEL1	0Ch
Reserved		0Eh
Port P9 complement selection	P9SELC	16h
Reserved		18h
Reserved		1Ah
Reserved		1Ch

Table 6-52. Port J Registers (Base Address: 0320h)

REGISTER DESCRIPTION	REGISTER	OFFSET
Port PJ input	PJIN	00h
Port PJ output	PJOUT	02h
Port PJ direction	PJDIR	04h
Port PJ resistor enable	PJREN	06h
Port PJ selection 0	PJSEL0	0Ah
Port PJ selection 1	PJSEL1	0Ch
Port PJ complement selection	PJSELC	16h

Table 6-53. Timer_A TA0 Registers (Base Address: 0340h)

REGISTER DESCRIPTION	REGISTER	OFFSET
TA0 control	TA0CTL	00h
Capture/compare control 0	TA0CCTL0	02h
Capture/compare control 1	TA0CCTL1	04h
Capture/compare control 2	TA0CCTL2	06h
TA0 counter	TA0R	10h
Capture/compare 0	TA0CCR0	12h
Capture/compare 1	TA0CCR1	14h
Capture/compare 2	TA0CCR2	16h
TA0 expansion 0	TA0EX0	20h
TA0 interrupt vector	TA0IV	2Eh

Copyright © 2015–2018, Texas Instruments Incorporated

Table 6-54. Timer_A TA1 Registers (Base Address: 0380h)

REGISTER DESCRIPTION	REGISTER	OFFSET
TA1 control	TA1CTL	00h
Capture/compare control 0	TA1CCTL0	02h
Capture/compare control 1	TA1CCTL1	04h
Capture/compare control 2	TA1CCTL2	06h
TA1 counter	TA1R	10h
Capture/compare 0	TA1CCR0	12h
Capture/compare 1	TA1CCR1	14h
Capture/compare 2	TA1CCR2	16h
TA1 expansion 0	TA1EX0	20h
TA1 interrupt vector	TA1IV	2Eh

Table 6-55. Timer_B TB0 Registers (Base Address: 03C0h)

REGISTER DESCRIPTION	REGISTER	OFFSET
TB0 control	TB0CTL	00h
Capture/compare control 0	TB0CCTL0	02h
Capture/compare control 1	TB0CCTL1	04h
Capture/compare control 2	TB0CCTL2	06h
Capture/compare control 3	TB0CCTL3	08h
Capture/compare control 4	TB0CCTL4	0Ah
Capture/compare control 5	TB0CCTL5	0Ch
Capture/compare control 6	TB0CCTL6	0Eh
TB0 counter	TB0R	10h
Capture/compare 0	TB0CCR0	12h
Capture/compare 1	TB0CCR1	14h
Capture/compare 2	TB0CCR2	16h
Capture/compare 3	TB0CCR3	18h
Capture/compare 4	TB0CCR4	1Ah
Capture/compare 5	TB0CCR5	1Ch
Capture/compare 6	TB0CCR6	1Eh
TB0 expansion 0	TB0EX0	20h
TB0 interrupt vector	TB0IV	2Eh

Table 6-56. Timer_A TA2 Registers (Base Address: 0400h)

REGISTER DESCRIPTION	REGISTER	OFFSET
TA2 control	TA2CTL	00h
Capture/compare control 0	TA2CCTL0	02h
Capture/compare control 1	TA2CCTL1	04h
TA2 counter	TA2R	10h
Capture/compare 0	TA2CCR0	12h
Capture/compare 1	TA2CCR1	14h
TA2 expansion 0	TA2EX0	20h
TA2 interrupt vector	TA2IV	2Eh

Table 6-57. Capacitive Touch I/O 0 Registers (Base Address: 0430h)

REGISTER DESCRIPTION	REGISTER	OFFSET
Capacitive touch I/O 0 control	CAPTIO0CTL	0Eh

Copyright © 2015–2018, Texas Instruments Incorporated

Table 6-58. Timer_A TA3 Registers (Base Address: 0440h)

REGISTER DESCRIPTION	REGISTER	OFFSET
TA3 control	TA3CTL	00h
Capture/compare control 0	TA3CCTL0	02h
Capture/compare control 1	TA3CCTL1	04h
Capture/compare control 2	TA3CCTL2	06h
Capture/compare control 3	TA3CCTL3	08h
Capture/compare control 4	TA3CCTL4	0Ah
TA3 counter	TA3R	10h
Capture/compare 0	TA3CCR0	12h
Capture/compare 1	TA3CCR1	14h
Capture/compare 2	TA3CCR2	16h
Capture/compare 3	TA3CCR3	18h
Capture/compare 4	TA3CCR4	1Ah
TA3 expansion 0	TA3EX0	20h
TA3 interrupt vector	TA3IV	2Eh

Table 6-59. Capacitive Touch I/O 1 Registers (Base Address: 0470h)

REGISTER DESCRIPTION	REGISTER	OFFSET
Capacitive touch I/O 1 control	CAPTIO1CTL	0Eh

Table 6-60. RTC_C Registers (Base Address: 04A0h)

REGISTER DESCRIPTION	REGISTER	OFFSET
RTC control 0	RTCCTL0	00h
RTC password	RTCPWD	01h
RTC control 1	RTCCTL1	02h
RTC control 3	RTCCTL3	03h
RTC offset calibration	RTCOCAL	04h
RTC temperature compensation	RTCTCMP	06h
RTC prescaler 0 control	RTCPS0CTL	08h
RTC prescaler 1 control	RTCPS1CTL	0Ah
RTC prescaler 0	RTCPS0	0Ch
RTC prescaler 1	RTCPS1	0Dh
RTC interrupt vector word	RTCIV	0Eh
RTC seconds/counter 1	RTCSEC/RTCNT1	10h
RTC minutes/counter 2	RTCMIN/RTCNT2	11h
RTC hours/counter 3	RTCHOUR/RTCNT3	12h
RTC day of week/counter 4	RTCDOW/RTCNT4	13h
RTC days	RTCDAY	14h
RTC month	RTCMON	15h
RTC year	RTCYEAR	16h
RTC alarm minutes	RTCAMIN	18h
RTC alarm hours	RTCAHOUR	19h
RTC alarm day of week	RTCADOW	1Ah
RTC alarm days	RTCADAY	1Bh
Binary-to-BCD conversion	BIN2BCD	1Ch
BCD-to-binary conversion	BCD2BIN	1Eh

Copyright © 2015–2018, Texas Instruments Incorporated

Table 6-61. 32-Bit Hardware Multiplier Registers (Base Address: 04C0h)

REGISTER DESCRIPTION	REGISTER	OFFSET
16-bit operand 1 – multiply	MPY	00h
16-bit operand 1 – signed multiply	MPYS	02h
16-bit operand 1 – multiply accumulate	MAC	04h
16-bit operand 1 – signed multiply accumulate	MACS	06h
16-bit operand 2	OP2	08h
16 × 16 result low word	RESLO	0Ah
16 × 16 result high word	RESHI	0Ch
16 × 16 sum extension	SUMEXT	0Eh
32-bit operand 1 – multiply low word	MPY32L	10h
32-bit operand 1 – multiply high word	MPY32H	12h
32-bit operand 1 – signed multiply low word	MPYS32L	14h
32-bit operand 1 – signed multiply high word	MPYS32H	16h
32-bit operand 1 – multiply accumulate low word	MAC32L	18h
32-bit operand 1 – multiply accumulate high word	MAC32H	1Ah
32-bit operand 1 – signed multiply accumulate low word	MACS32L	1Ch
32-bit operand 1 – signed multiply accumulate high word	MACS32H	1Eh
32-bit operand 2 – low word	OP2L	20h
32-bit operand 2 – high word	OP2H	22h
32 × 32 result 0 – least significant word	RES0	24h
32 × 32 result 1	RES1	26h
32 × 32 result 2	RES2	28h
32 × 32 result 3 – most significant word	RES3	2Ah
MPY32 control 0	MPY32CTL0	2Ch

Table 6-62. DMA Registers (Base Address DMA General Control: 0500h, DMA Channel 0: 0510h, DMA Channel 1: 0520h, DMA Channel 2: 0530h)

REGISTER DESCRIPTION	REGISTER	OFFSET
DMA channel 0 control	DMA0CTL	00h
DMA channel 0 source address low	DMA0SAL	02h
DMA channel 0 source address high	DMA0SAH	04h
DMA channel 0 destination address low	DMA0DAL	06h
DMA channel 0 destination address high	DMA0DAH	08h
DMA channel 0 transfer size	DMA0SZ	0Ah
DMA channel 1 control	DMA1CTL	00h
DMA channel 1 source address low	DMA1SAL	02h
DMA channel 1 source address high	DMA1SAH	04h
DMA channel 1 destination address low	DMA1DAL	06h
DMA channel 1 destination address high	DMA1DAH	08h
DMA channel 1 transfer size	DMA1SZ	0Ah
DMA channel 2 control	DMA2CTL	00h
DMA channel 2 source address low	DMA2SAL	02h
DMA channel 2 source address high	DMA2SAH	04h
DMA channel 2 destination address low	DMA2DAL	06h
DMA channel 2 destination address high	DMA2DAH	08h
DMA channel 2 transfer size	DMA2SZ	0Ah
DMA module control 0	DMACTL0	00h
DMA module control 1	DMACTL1	02h

Copyright © 2015–2018, Texas Instruments Incorporated

Table 6-62. DMA Registers (Base Address DMA General Control: 0500h, DMA Channel 0: 0510h, DMA Channel 1: 0520h, DMA Channel 2: 0530h) (continued)

REGISTER DESCRIPTION	REGISTER	OFFSET
DMA module control 2	DMACTL2	04h
DMA module control 3	DMACTL3	06h
DMA module control 4	DMACTL4	08h
DMA interrupt vector	DMAIV	0Eh

Table 6-63. MPU Control Registers (Base Address: 05A0h)

REGISTER DESCRIPTION	REGISTER	OFFSET
MPU control 0	MPUCTL0	00h
MPU control 1	MPUCTL1	02h
MPU Segmentation Border 2	MPUSEGB2	04h
MPU Segmentation Border 1	MPUSEGB1	06h
MPU access management	MPUSAM	08h
MPU IP control 0	MPUIPC0	0Ah
MPU IP Encapsulation Segment Border 2	MPUIPSEGB2	0Ch
MPU IP Encapsulation Segment Border 1	MPUIPSEGB1	0Eh

Table 6-64. eUSCI_A0 Registers (Base Address: 05C0h)

REGISTER DESCRIPTION	REGISTER	OFFSET
eUSCI_A control word 0	UCA0CTLW0	00h
eUSCI _A control word 1	UCA0CTLW1	02h
eUSCI_A baud rate 0	UCA0BR0	06h
eUSCI_A baud rate 1	UCA0BR1	07h
eUSCI_A modulation control	UCA0MCTLW	08h
eUSCI_A status word	UCA0STATW	0Ah
eUSCI_A receive buffer	UCA0RXBUF	0Ch
eUSCI_A transmit buffer	UCA0TXBUF	0Eh
eUSCI_A LIN control	UCA0ABCTL	10h
eUSCI_A IrDA transmit control	UCA0IRTCTL	12h
eUSCI_A IrDA receive control	UCA0IRRCTL	13h
eUSCI_A interrupt enable	UCA0IE	1Ah
eUSCI_A interrupt flags	UCA0IFG	1Ch
eUSCI_A interrupt vector word	UCA0IV	1Eh

Table 6-65. eUSCI_A1 Registers (Base Address:05E0h)

REGISTER DESCRIPTION	REGISTER	OFFSET
eUSCI_A control word 0	UCA1CTLW0	00h
eUSCI _A control word 1	UCA1CTLW1	02h
eUSCI_A baud rate 0	UCA1BR0	06h
eUSCI_A baud rate 1	UCA1BR1	07h
eUSCI_A modulation control	UCA1MCTLW	08h
eUSCI_A status word	UCA1STATW	0Ah
eUSCI_A receive buffer	UCA1RXBUF	0Ch
eUSCI_A transmit buffer	UCA1TXBUF	0Eh
eUSCI_A LIN control	UCA1ABCTL	10h
eUSCI_A IrDA transmit control	UCA1IRTCTL	12h

Copyright © 2015–2018, Texas Instruments Incorporated

Table 6-65. eUSCI_A1 Registers (Base Address:05E0h) (continued)

REGISTER DESCRIPTION	REGISTER	OFFSET
eUSCI_A IrDA receive control	UCA1IRRCTL	13h
eUSCI_A interrupt enable	UCA1IE	1Ah
eUSCI_A interrupt flags	UCA1IFG	1Ch
eUSCI_A interrupt vector word	UCA1IV	1Eh

Table 6-66. eUSCI_B0 Registers (Base Address: 0640h)

REGISTER DESCRIPTION	REGISTER	OFFSET
eUSCI_B control word 0	UCB0CTLW0	00h
eUSCI_B control word 1	UCB0CTLW1	02h
eUSCI_B bit rate 0	UCB0BR0	06h
eUSCI_B bit rate 1	UCB0BR1	07h
eUSCI_B status word	UCB0STATW	08h
eUSCI_B byte counter threshold	UCB0TBCNT	0Ah
eUSCI_B receive buffer	UCB0RXBUF	0Ch
eUSCI_B transmit buffer	UCB0TXBUF	0Eh
eUSCI_B I2C own address 0	UCB0I2COA0	14h
eUSCI_B I2C own address 1	UCB0I2COA1	16h
eUSCI_B I2C own address 2	UCB0I2COA2	18h
eUSCI_B I2C own address 3	UCB0I2COA3	1Ah
eUSCI_B received address	UCB0ADDRX	1Ch
eUSCI_B address mask	UCB0ADDMASK	1Eh
eUSCI_B I2C slave address	UCB0I2CSA	20h
eUSCI_B interrupt enable	UCB0IE	2Ah
eUSCI_B interrupt flags	UCB0IFG	2Ch
eUSCI_B interrupt vector word	UCB0IV	2Eh

Table 6-67. eUSCI_B1 Registers (Base Address: 0680h)

REGISTER DESCRIPTION	REGISTER	OFFSET
eUSCI_B control word 0	UCB1CTLW0	00h
eUSCI_B control word 1	UCB1CTLW1	02h
eUSCI_B bit rate 0	UCB1BR0	06h
eUSCI_B bit rate 1	UCB1BR1	07h
eUSCI_B status word	UCB1STATW	08h
eUSCI_B byte counter threshold	UCB1TBCNT	0Ah
eUSCI_B receive buffer	UCB1RXBUF	0Ch
eUSCI_B transmit buffer	UCB1TXBUF	0Eh
eUSCI_B I2C own address 0	UCB1I2COA0	14h
eUSCI_B I2C own address 1	UCB1I2COA1	16h
eUSCI_B I2C own address 2	UCB1I2COA2	18h
eUSCI_B I2C own address 3	UCB1I2COA3	1Ah
eUSCI_B received address	UCB1ADDRX	1Ch
eUSCI_B address mask	UCB1ADDMASK	1Eh
eUSCI_B I2C slave address	UCB1I2CSA	20h
eUSCI_B interrupt enable	UCB1IE	2Ah
eUSCI_B interrupt flags	UCB1IFG	2Ch
eUSCI_B interrupt vector word	UCB1IV	2Eh

Copyright © 2015–2018, Texas Instruments Incorporated

Table 6-68. ADC12_B Registers (Base Address: 0800h)

REGISTER DESCRIPTION	REGISTER	OFFSET
ADC12_B control 0	ADC12CTL0	00h
ADC12_B control 1	ADC12CTL1	02h
ADC12_B control 2	ADC12CTL2	04h
ADC12_B control 3	ADC12CTL3	06h
ADC12_B window comparator low threshold	ADC12LO	08h
ADC12_B window comparator high threshold	ADC12HI	0Ah
ADC12_B interrupt flag 0	ADC12IFGR0	0Ch
ADC12_B interrupt flag 1	ADC12IFGR1	0Eh
ADC12_B interrupt flag 2	ADC12IFGR2	10h
ADC12_B interrupt enable 0	ADC12IER0	12h
ADC12_B Interrupt Enable 1	ADC12IER1	14h
ADC12_B interrupt enable 2	ADC12IER2	16h
ADC12_B interrupt vector	ADC12IV	18h
ADC12_B memory control 0	ADC12MCTL0	20h
ADC12_B memory control 1	ADC12MCTL1	22h
ADC12_B memory control 2	ADC12MCTL2	24h
ADC12_B memory control 3	ADC12MCTL3	26h
ADC12_B memory control 4	ADC12MCTL4	28h
ADC12_B memory control 5	ADC12MCTL5	2Ah
ADC12_B memory control 6	ADC12MCTL6	2Ch
ADC12_B memory control 7	ADC12MCTL7	2Eh
ADC12_B memory control 8	ADC12MCTL8	30h
ADC12_B memory control 9	ADC12MCTL9	32h
ADC12_B memory control 10	ADC12MCTL10	34h
ADC12_B memory control 11	ADC12MCTL11	36h
ADC12_B memory control 12	ADC12MCTL12	38h
ADC12_B memory control 13	ADC12MCTL13	3Ah
ADC12_B memory control 14	ADC12MCTL14	3Ch
ADC12_B memory control 15	ADC12MCTL15	3Eh
ADC12_B memory control 16	ADC12MCTL16	40h
ADC12_B memory control 17	ADC12MCTL17	42h
ADC12_B memory control 18	ADC12MCTL18	44h
ADC12_B memory control 19	ADC12MCTL19	46h
ADC12_B memory control 20	ADC12MCTL20	48h
ADC12_B memory control 21	ADC12MCTL21	4Ah
ADC12_B memory control 22	ADC12MCTL22	4Ch
ADC12_B memory control 23	ADC12MCTL23	4Eh
ADC12_B memory control 24	ADC12MCTL24	50h
ADC12_B memory control 25	ADC12MCTL25	52h
ADC12_B memory control 26	ADC12MCTL26	54h
ADC12_B memory control 27	ADC12MCTL27	56h
ADC12_B memory control 28	ADC12MCTL28	58h
ADC12_B memory control 29	ADC12MCTL29	5Ah
ADC12_B memory control 30	ADC12MCTL30	5Ch
ADC12_B memory control 31	ADC12MCTL31	5Eh
ADC12_B memory 0	ADC12MEM0	60h
ADC12_B memory 1	ADC12MEM1	62h

Table 6-68. ADC12_B Registers (Base Address: 0800h) (continued)

REGISTER DESCRIPTION	REGISTER	OFFSET
ADC12_B memory 2	ADC12MEM2	64h
ADC12_B memory 3	ADC12MEM3	66h
ADC12_B memory 4	ADC12MEM4	68h
ADC12_B memory 5	ADC12MEM5	6Ah
ADC12_B memory 6	ADC12MEM6	6Ch
ADC12_B memory 7	ADC12MEM7	6Eh
ADC12_B memory 8	ADC12MEM8	70h
ADC12_B memory 9	ADC12MEM9	72h
ADC12_B memory 10	ADC12MEM10	74h
ADC12_B memory 11	ADC12MEM11	76h
ADC12_B memory 12	ADC12MEM12	78h
ADC12_B memory 13	ADC12MEM13	7Ah
ADC12_B memory 14	ADC12MEM14	7Ch
ADC12_B memory 15	ADC12MEM15	7Eh
ADC12_B memory 16	ADC12MEM16	80h
ADC12_B memory 17	ADC12MEM17	82h
ADC12_B memory 18	ADC12MEM18	84h
ADC12_B memory 19	ADC12MEM19	86h
ADC12_B memory 20	ADC12MEM20	88h
ADC12_B memory 21	ADC12MEM21	8Ah
ADC12_B memory 22	ADC12MEM22	8Ch
ADC12_B memory 23	ADC12MEM23	8Eh
ADC12_B memory 24	ADC12MEM24	90h
ADC12_B memory 25	ADC12MEM25	92h
ADC12_B memory 26	ADC12MEM26	94h
ADC12_B memory 27	ADC12MEM27	96h
ADC12_B memory 28	ADC12MEM28	98h
ADC12_B memory 29	ADC12MEM29	9Ah
ADC12_B memory 30	ADC12MEM30	9Ch
ADC12_B memory 31	ADC12MEM31	9Eh

Table 6-69. Comparator_E Registers (Base Address: 08C0h)

REGISTER DESCRIPTION	REGISTER	OFFSET
Comparator control 0	CECTL0	00h
Comparator control 1	CECTL1	02h
Comparator control 2	CECTL2	04h
Comparator control 3	CECTL3	06h
Comparator interrupt	CEINT	0Ch
Comparator interrupt vector word	CEIV	0Eh

Table 6-70. CRC32 Registers (Base Address: 0980h)

REGISTER DESCRIPTION	REGISTER	OFFSET
CRC32 data input	CRC32DIW0	00h
Reserved		02h
Reserved		04h
CRC32 data input reverse	CRC32DIRBW0	06h
CRC32 initialization and result word 0	CRC32INIRESW0	08h

Copyright © 2015–2018, Texas Instruments Incorporated

Table 6-70. CRC32 Registers (Base Address: 0980h) (continued)

REGISTER DESCRIPTION	REGISTER	OFFSET
CRC32 initialization and result word 1	CRC32INIRESW1	0Ah
CRC32 result reverse word 1	CRC32RESRW1	0Ch
CRC32 result reverse word 0	CRC32RESRW1	0Eh
CRC16 data input	CRC16DIW0	10h
Reserved		12h
Reserved		14h
CRC16 data input reverse	CRC16DIRBW0	16h
CRC16 initialization and result word 0	CRC16INIRESW0	18h
Reserved		1Ah
Reserved		1Ch
CRC16 result reverse word 0	CRC16RESRW1	1Eh
Reserved		20h
Reserved		22h
Reserved		24h
Reserved		26h
Reserved		28h
Reserved		2Ah
Reserved		2Ch
Reserved		2Eh

Table 6-71. AES Accelerator Registers (Base Address: 09C0h)

REGISTER DESCRIPTION	REGISTER	OFFSET
AES accelerator control 0	AESACTL0	00h
Reserved		02h
AES accelerator status	AESASTAT	04h
AES accelerator key	AESAKEY	06h
AES accelerator data in	AESADIN	008h
AES accelerator data out	AESADOUT	00Ah
AES accelerator XORed data in	AESAXDIN	00Ch
AES accelerator XORed data in (no trigger)	AESAXIN	00Eh

6.14 Identification

6.14.1 Revision Identification

The device revision information is shown as part of the top-side marking on the device package. The device-specific errata sheet describes these markings. For links to the errata sheets for the devices in this data sheet, see Section 8.4.

The hardware revision is also stored in the Device Descriptor structure in the Info Block section. For details on this value, see the "Hardware Revision" entries in Section 6.12.

6.14.2 Device Identification

The device type can be identified from the top-side marking on the device package. The device-specific errata sheet describes these markings. For links to the errata sheets for the devices in this data sheet, see Section 8.4.

A device identification value is also stored in the Device Descriptor structure in the Info Block section. For details on this value, see the "Device ID" entries in Section 6.12.

6.14.3 JTAG Identification

Programming through the JTAG interface, including reading and identifying the JTAG ID, is described in detail in *MSP430 Programming With the JTAG Interface*.

Copyright © 2015–2018, Texas Instruments Incorporated

7 Applications, Implementation, and Layout

NOTE

Information in the following applications sections is not part of the TI component specification, and TI does not warrant its accuracy or completeness. TI's customers are responsible for determining suitability of components for their purposes. Customers should validate and test their design implementation to confirm system functionality.

7.1 Device Connection and Layout Fundamentals

This section describes the recommended guidelines when designing with the MSP430. These guidelines are to make sure that the device has proper connections for powering, programming, debugging, and optimum analog performance.

7.1.1 Power Supply Decoupling and Bulk Capacitors

TI recommends connecting a combination of a 1-µF plus a 100-nF low-ESR ceramic decoupling capacitor to each AVCC and DVCC pin. Higher-value capacitors may be used but can impact supply rail ramp-up time. Decoupling capacitors must be placed as close as possible to the pins that they decouple (within a few millimeters). Additionally, TI recommends separated grounds with a single-point connection for better noise isolation from digital to analog circuits on the board and to achieve high analog accuracy.

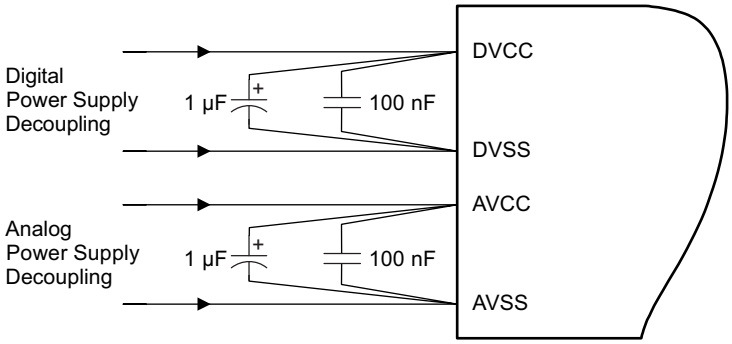

Figure 7-1. Power Supply Decoupling

7.1.2 External Oscillator

Depending on the device variant (see Section 3), the device can support a low-frequency crystal (32 kHz) on the LFXT pins, a high-frequency crystal on the HFXT pins, or both. External bypass capacitors for the crystal oscillator pins are required.

It is also possible to apply digital clock signals to the LFXIN and HFXIN input pins that meet the specifications of the respective oscillator if the appropriate LFXTBYPASS or HFXTBYPASS mode is selected. In this case, the associated LFXOUT and HFXOUT pins can be used for other purposes. If they are left unused, they must be terminated according to Section 4.6.

Figure 7-2 shows a typical connection diagram.

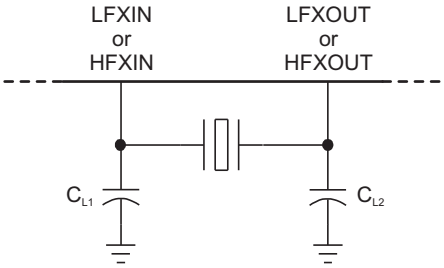

Figure 7-2. Typical Crystal Connection

See *MSP430 32-kHz Crystal Oscillators* for more information on selecting, testing, and designing a crystal oscillator with the MSP430 devices.

7.1.3 JTAG

With the proper connections, the debugger and a hardware JTAG interface (such as the MSP-FET or MSP-FET430UIF) can be used to program and debug code on the target board. In addition, the connections also support the MSP-GANG production programmers, thus providing an easy way to program prototype boards, if desired. Figure 7-3 shows the connections between the 14-pin JTAG connector and the target device required to support in-system programming and debugging for 4-wire JTAG communication. Figure 7-4 shows the connections for 2-wire JTAG mode (Spy-Bi-Wire).

The connections for the MSP-FET and MSP-FET430UIF interface modules and the MSP-GANG are identical. Both can supply V_{CC} to the target board (through pin 2). In addition, the MSP-FET and MSP-FET430UIF interface modules and MSP-GANG have a V_{CC}-sense feature that, if used, requires an alternate connection (pin 4 instead of pin 2). The V_{CC}-sense feature senses the local V_{CC} present on the target board (that is, a battery or other local power supply) and adjusts the output signals accordingly. Figure 7-3 and Figure 7-4 show a jumper block that supports both scenarios of supplying V_{CC} to the target board. If this flexibility is not required, the desired V_{CC} connections may be hard-wired to eliminate the jumper block. Pins 2 and 4 must not be connected at the same time.

For additional design information regarding the JTAG interface, see the *MSP430 Hardware Tools User's Guide*.

Copyright © 2015–2018, Texas Instruments Incorporated

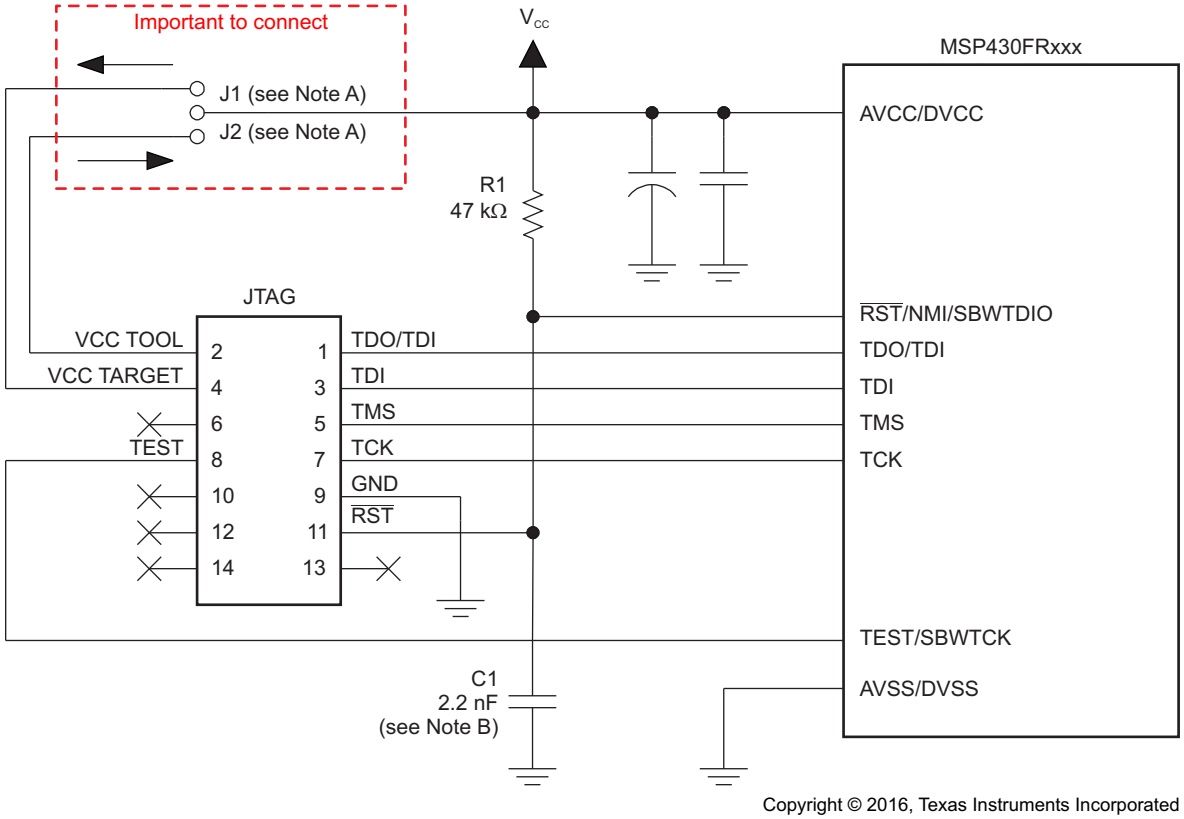

A. If a local target power supply is used, make connection J1. If power from the debug or programming adapter is used, make connection J2.

B. The upper limit for C1 is 2.2 nF when using current TI tools.

Figure 7-3. Signal Connections for 4-Wire JTAG Communication

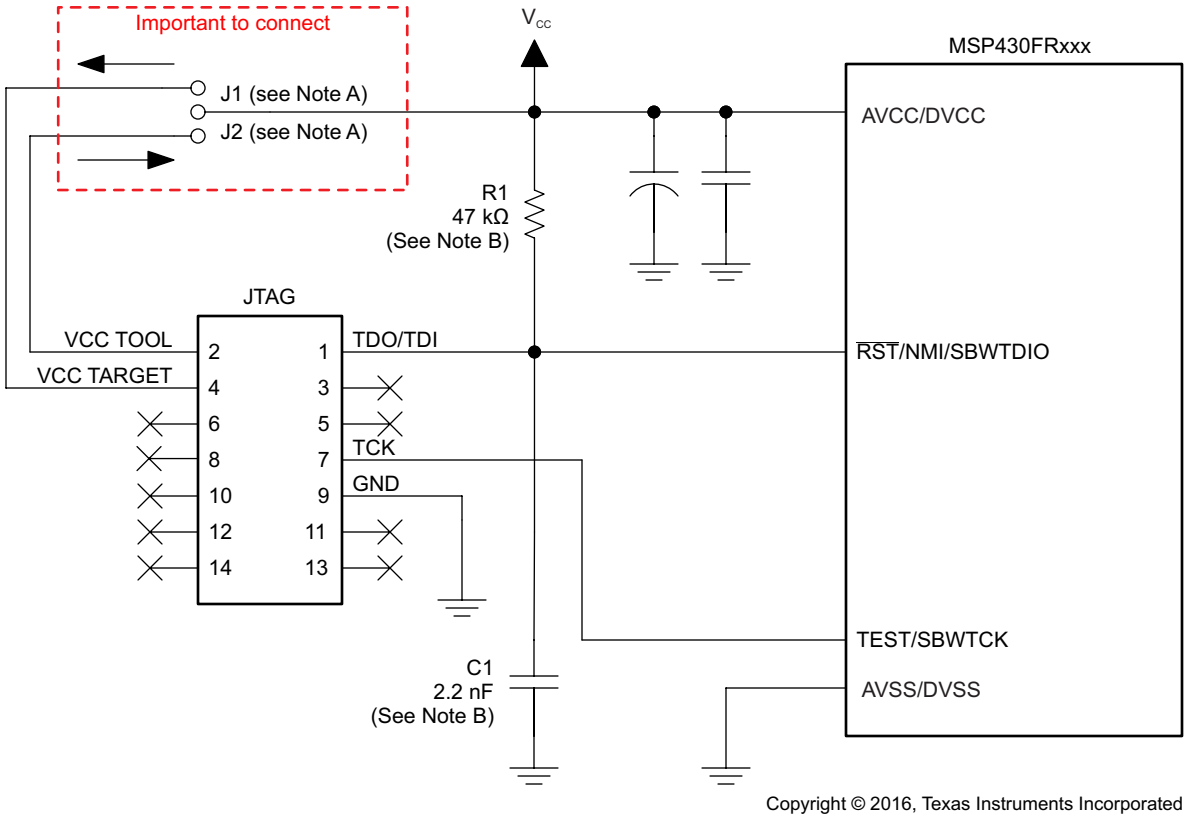

A. Make connection J1 if a local target power supply is used, or make connection J2 if the target is powered from the debug or programming adapter.

B. The device $\overline{\text{RST}}$/NMI/SBWTDIO pin is used in 2-wire mode for bidirectional communication with the device during JTAG access, and any capacitance that is attached to this signal may affect the ability to establish a connection with the device. The upper limit for C1 is 2.2 nF when using current TI tools.

Figure 7-4. Signal Connections for 2-Wire JTAG Communication (Spy-Bi-Wire)

7.1.4 Reset

The reset pin can be configured as a reset function (default) or as an NMI function in the special function register (SFR) SFRRPCR.

In reset mode, the $\overline{\text{RST}}$/NMI pin is active low, and a pulse applied to this pin that meets the reset timing specifications generates a BOR-type device reset.

Setting SYSNMI causes the $\overline{\text{RST}}$/NMI pin to be configured as an external NMI source. The external NMI is edge sensitive, and its edge is selectable by SYSNMIIES. Setting the NMIIE enables the interrupt of the external NMI. When an external NMI event occurs, the NMIIFG is set.

The $\overline{\text{RST}}$/NMI pin can have either a pullup or pulldown that is enabled or not. SYSRSTUP selects either pullup or pulldown, and SYSRSTRE causes the pullup (default) or pulldown to be enabled (default) or not. If the $\overline{\text{RST}}$/NMI pin is unused, it is required either to select and enable the internal pullup or to connect an external 47-kΩ pullup resistor to the $\overline{\text{RST}}$/NMI pin with a 10-nF pulldown capacitor. The pulldown capacitor should not exceed 2.2 nF when using devices with Spy-Bi-Wire interface in Spy-Bi-Wire mode or in 4-wire JTAG mode with TI tools like FET interfaces or GANG programmers.

See the *MSP430FR58xx, MSP430FR59xx, and MSP430FR6xx Family User's Guide* for more information on the referenced control registers and bits.

7.1.5 Unused Pins

For details on the connection of unused pins, see Section 4.6.

Copyright © 2015–2018, Texas Instruments Incorporated

7.1.6 General Layout Recommendations

- Proper grounding and short traces for external crystal to reduce parasitic capacitance. See *MSP430 32-kHz Crystal Oscillators* for recommended layout guidelines.
- Proper bypass capacitors on DVCC, AVCC, and reference pins if used.
- Avoid routing any high-frequency signal close to an analog signal line. For example, keep digital switching signals such as PWM or JTAG signals away from the oscillator circuit.
- Proper ESD level protection should be considered to protect the device from unintended high-voltage electrostatic discharge. See *MSP430 System-Level ESD Considerations* for guidelines.

7.1.7 Do's and Don'ts

TI recommends powering AVCC and DVCC pins from the same source. At a minimum, during power up, power down, and device operation, the voltage difference between AVCC and DVCC must not exceed the limits specified in Section 5.1. Exceeding the specified limits may cause malfunction of the device including erroneous writes to RAM and FRAM.

7.2 Peripheral- and Interface-Specific Design Information

7.2.1 ADC12_B Peripheral

7.2.1.1 Partial Schematic

Figure 7-5 shows the recommended decoupling circuit when an external voltage reference is used. The internal reference module has a maximum drive current as specified in the $I_{O(VREF+)}$ specification of the REF module.

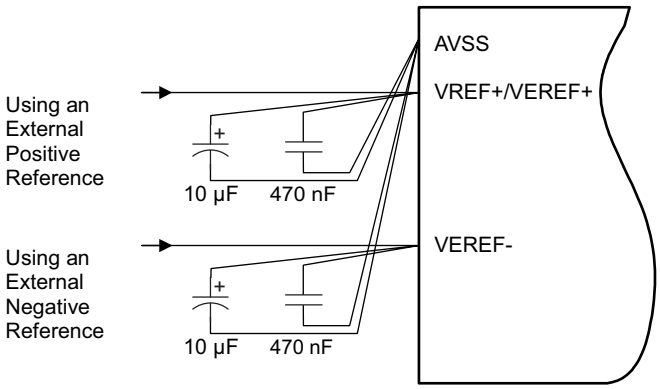

Figure 7-5. ADC12_B Grounding and Noise Considerations

7.2.1.2 Design Requirements

As with any high-resolution ADC, appropriate printed-circuit-board layout and grounding techniques should be followed to eliminate ground loops, unwanted parasitic effects, and noise.

Ground loops are formed when return current from the ADC flows through paths that are common with other analog or digital circuitry. If care is not taken, this current can generate small unwanted offset voltages that can add to or subtract from the reference or input voltages of the ADC. The general guidelines in Section 7.1.1 combined with the connections shown in Section 7.2.1.1 prevent this.

In addition to grounding, ripple and noise spikes on the power-supply lines that are caused by digital switching or switching power supplies can corrupt the conversion result. TI recommends a noise-free design using separate analog and digital ground planes with a single-point connection to achieve high accuracy.

The reference voltage must be a stable voltage for accurate measurements. The capacitor values that are selected in the general guidelines filter out the high- and low-frequency ripple before the reference voltage enters the device. In this case, the 10-µF capacitor is used to buffer the reference pin and filter any low-frequency ripple. A 470-nF bypass capacitor is used to filter out any high-frequency noise.

7.2.1.3 Detailed Design Procedure

For additional design information, see *Designing With the MSP430FR58xx, FR59xx, FR68xx, and FR69xx ADC*.

7.2.1.4 Layout Guidelines

Components that are shown in the partial schematic (see Figure 7-5) should be placed as close as possible to the respective device pins. Avoid long traces, because they add additional parasitic capacitance, inductance, and resistance on the signal.

Avoid routing analog input signals close to a high-frequency pin (for example, a high-frequency PWM), because the high-frequency switching can be coupled into the analog signal.

If differential mode is used for the ADC12_B, the analog differential input signals must be routed close together to minimize the effect of noise on the resulting signal.

Copyright © 2015–2018, Texas Instruments Incorporated

8 Device and Documentation Support

8.1 Getting Started and Next Steps

For more information on the MSP430™ family of devices and the tools and libraries that are available to help with your development, visit the Getting Started page.

8.2 Device Nomenclature

To designate the stages in the product development cycle, TI assigns prefixes to the part numbers of all MSP MCU devices. Each MSP MCU commercial family member has one of two prefixes: MSP or XMS. These prefixes represent evolutionary stages of product development from engineering prototypes (XMS) through fully qualified production devices (MSP).

XMS – Experimental device that is not necessarily representative of the final device's electrical specifications

MSP – Fully qualified production device

XMS devices are shipped against the following disclaimer:

"Developmental product is intended for internal evaluation purposes."

MSP devices have been characterized fully, and the quality and reliability of the device have been demonstrated fully. TI's standard warranty applies.

Predictions show that prototype devices (XMS) have a greater failure rate than the standard production devices. TI recommends that these devices not be used in any production system because their expected end-use failure rate still is undefined. Only qualified production devices are to be used.

TI device nomenclature also includes a suffix with the device family name. This suffix indicates the temperature range, package type, and distribution format. Figure 8-1 provides a legend for reading the complete device name.

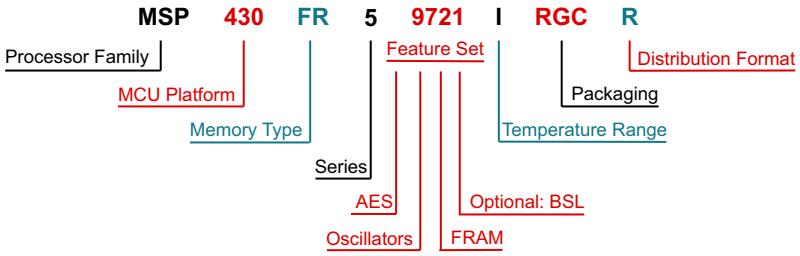

Processor Family	MSP = Mixed Signal Processor XMS = Experimental Silicon			
MCU Platform	430 = TI's 16-bit MSP430 Low-Power Microcontroller Platform			
Memory Type	FR = FRAM			
Series	5 = FRAM 5 Series up to 16 MHz without LCD			
Feature Set	**AES** 9 = AES 8 = No AES	**Oscillators** 7 = HFXT and LFXT 2 = LFXT	**FRAM (KB)** 2 = 64 0 = 32	**Optional: BSL** 1 = I^2C No value = UART
Temperature Range	I = –40°C to 85°C			
Packaging	http://www.ti.com/packaging			
Distribution Format	T = Small reel R = Large reel No markings = Tube or tray			

Figure 8-1. Device Nomenclature

8.3 Tools and Software

All MSP microcontrollers are supported by a wide variety of software and hardware development tools. Tools are available from TI and various third parties. See them all at Development Kits and Software for Low-Power MCUs.

Table 8-1 lists the debug features of the MSP430FR597x(1), MSP430FR592x(1) and MSP430FR587x(1) MCUs. See the *Code Composer Studio for MSP430 User's Guide* for details on the available features.

Table 8-1. Hardware Debug Features

MSP430 ARCHITECTURE	4-WIRE JTAG	2-WIRE JTAG	BREAK-POINTS	RANGE BREAK-POINTS	CLOCK CONTROL	STATE SEQUENCER	TRACE BUFFER	LPMx.5 DEBUGGING SUPPORT	EnergyTrace++ TECHNOLOGY
MSP430Xv2	Yes	Yes	3	Yes	Yes	No	No	Yes	Yes

Design Kits and Evaluation Modules

MSP430FR6989 LaunchPad Development Kit The MSP-EXP430FR6989 LaunchPad Development Kit is an easy-to-use Evaluation Module (EVM) for the MSP40FR6989 microcontroller (MCU). It contains everything needed to start developing on the ultra-low-power MSP430FRx FRAM microcontroller platform, including onboard emulation for programming, debugging, and energy measurements.

MSP-TS430PM64F - MSP430 64-pin FRAM Target Socket Board The MSP-TS430PZ5X100 is a stand-alone ZIF socket target board used to program and debug the MSP430 MCU in-system through the JTAG interface or the Spy-Bi-Wire (2-wire JTAG) protocol.

MSP-FET430U64F - MSP430 64-pin FRAM TS Board and MSP-FET Bundle The MSP-FET430U64F is a bundle containing the MSP-FET emulator and a stand-alone 64-pin ZIF socket target board to program and debug the MSP430 in-system through the JTAG interface or the Spy-Bi-Wire (2-wire JTAG) protocol. The TS development board supports the MSP430FR6972 FRAM device in a 64-pin LQFP package (TI package code: PM).

Software

MSP430Ware™ Software MSP430Ware software is a collection of code examples, data sheets, and other design resources for all MSP430 devices delivered in a convenient package. In addition to providing a complete collection of existing MSP430 MCU design resources, MSP430Ware software also includes a high-level API called MSP Driver Library. This library makes it easy to program MSP430 hardware. MSP430Ware software is available as a component of CCS or as a stand-alone package.

MSP430FR592x, MSP430FR5x7x, MSP430FR6x2x, MSP430FR6x7x Code Examples C Code examples are available for every MSP device that configures each of the integrated peripherals for various application needs.

Capacitive Touch Software Library Free C libraries for enabling capacitive touch capabilities on MSP430 MCUs. The MSP430 MCU version of the library features several capacitive touch implementations including the RO and RC method.

MSP Driver Library The abstracted API of MSP Driver Library provides easy-to-use function calls that free you from directly manipulating the bits and bytes of the MSP430 hardware. Thorough documentation is delivered through a helpful API Guide, which includes details on each function call and the recognized parameters. Developers can use Driver Library functions to write complete projects with minimal overhead.

MSP EnergyTrace™ Technology EnergyTrace technology for MSP430 microcontrollers is an energy-based code analysis tool that measures and displays the energy profile of the application and helps to optimize it for ultra-low-power consumption.

ULP (Ultra-Low Power) Advisor ULP Advisor™ software is a tool for guiding developers to write more efficient code to fully use the unique ultra-low-power features of MSP and MSP432 microcontrollers. Aimed at both experienced and new microcontroller developers, ULP Advisor checks your code against a thorough ULP checklist to help minimize the energy consumption of your application. At build time, ULP Advisor provides notifications and remarks to identify areas of your code that can be further optimized for lower power.

Copyright © 2015–2018, Texas Instruments Incorporated

IEC60730 Software Package The IEC60730 MSP430 software package was developed to help customers comply with IEC 60730-1:2010 (Automatic Electrical Controls for Household and Similar Use – Part 1: General Requirements) for up to Class B products, which includes home appliances, arc detectors, power converters, power tools, e-bikes, and many others. The IEC60730 MSP430 software package can be embedded in customer applications running on MSP430s to help simplify the customer's certification efforts of functional safety-compliant consumer devices to IEC 60730-1:2010 Class B.

Fixed Point Math Library for MSP The MSP IQmath and Qmath Libraries are a collection of highly optimized and high-precision mathematical functions for C programmers to seamlessly port a floating-point algorithm into fixed-point code on MSP430 and MSP432 devices. These routines are typically used in computationally intensive real-time applications where optimal execution speed, high accuracy, and ultra-low energy are critical. By using the IQmath and Qmath libraries, it is possible to achieve execution speeds considerably faster and energy consumption considerably lower than equivalent code written using floating-point math.

Floating Point Math Library for MSP430 Continuing to innovate in the low-power and low-cost microcontroller space, TI provides MSPMATHLIB. Leveraging the intelligent peripherals of MSP devices, this floating-point math library of scalar functions is up to 26 times faster than the standard MSP430 math functions. Mathlib is easy to integrate into your designs. This library is free and is integrated in both Code Composer Studio IDE and IAR Embedded Workbench IDE.

Development Tools

Code Composer Studio™ Integrated Development Environment for MSP Microcontrollers Code Composer Studio (CCS) integrated development environment (IDE) supports all MSP microcontroller devices. CCS comprises a suite of embedded software utilities used to develop and debug embedded applications. CCS includes an optimizing C/C++ compiler, source code editor, project build environment, debugger, profiler, and many other features.

Command-Line Programmer MSP Flasher is an open-source shell-based interface for programming MSP microcontrollers through a FET programmer or eZ430 using JTAG or Spy-Bi-Wire (SBW) communication. MSP Flasher can download binary files (.txt or .hex) directly to the MSP microcontroller without an IDE.

MSP MCU Programmer and Debugger The MSP-FET is a powerful emulation development tool – often called a debug probe – which lets users quickly begin application development on MSP low-power MCUs. Creating MCU software usually requires downloading the resulting binary program to the MSP device for validation and debugging.

MSP-GANG Production Programmer The MSP Gang Programmer is an MSP430 or MSP432 device programmer that can program up to eight identical MSP430 or MSP432 flash or FRAM devices at the same time. The MSP Gang Programmer connects to a host PC using a standard RS-232 or USB connection and provides flexible programming options that let the user fully customize the process.

8.4 Documentation Support

The following documents describe the MSP430FR597x(1), MSP430FR592x(1) and MSP430FR587x(1) MCUs. Copies of these documents are available on the Internet at www.ti.com.

Receiving Notification of Document Updates

To receive notification of documentation updates—including silicon errata—go to the product folder for your device on ti.com (for links to product folders, see Section 8.5). In the upper right corner, click the "Alert me" button. This registers you to receive a weekly digest of product information that has changed (if any). For change details, check the revision history of any revised document.

Errata

MSP430FR5972 Device Erratasheet Describes the known exceptions to the functional specifications.

MSP430FR59721 Device Erratasheet Describes the known exceptions to the functional specifications.

MSP430FR5922 Device Erratasheet Describes the known exceptions to the functional specifications.

MSP430FR59221 Device Erratasheet Describes the known exceptions to the functional specifications.

MSP430FR5970 Device Erratasheet Describes the known exceptions to the functional specifications.

MSP430FR5872 Device Erratasheet Describes the known exceptions to the functional specifications.

MSP430FR58721 Device Erratasheet Describes the known exceptions to the functional specifications.

MSP430FR5870 Device Erratasheet Describes the known exceptions to the functional specifications.

User's Guides

MSP430FR58xx, MSP430FR59xx, and MSP430FR6xx Family User's Guide Detailed information on the modules and peripherals available in this device family.

MSP430 FRAM Device Bootloader (BSL) User's Guide The bootloader (BSL) on MSP430 MCUs lets users communicate with embedded memory in the MSP430 MCU during the prototyping phase, final production, and in service. Both the programmable memory (FRAM memory) and the data memory (RAM) can be modified as required.

MSP430 Programming With the JTAG Interface This document describes the functions that are required to erase, program, and verify the memory module of the MSP430 flash-based and FRAM-based microcontroller families using the JTAG communication port. In addition, it describes how to program the JTAG access security fuse that is available on all MSP430 devices. This document describes device access using both the standard 4-wire JTAG interface and the 2-wire JTAG interface, which is also referred to as Spy-Bi-Wire (SBW).

MSP430 Hardware Tools User's Guide This manual describes the hardware of the TI MSP-FET430 Flash Emulation Tool (FET). The FET is the program development tool for the MSP430 ultra-low-power microcontroller. Both available interface types, the parallel port interface and the USB interface, are described.

Application Reports

Getting Started With EEMBC ULPBench on MSP-EXP430FR5969 This is a getting started guide for obtaining the ULPMark™-CP score using the Embedded Microprocessor Benchmark Consortium (EEMBC) ULPBench™ and EnergyMonitor with the MSP430FR5969 microcontroller (MCU). This document uses the MSP-EXP430FR5969 LaunchPad development kit as the target evaluation module (EVM) for performing the benchmark. ULPBench is a EEMBC benchmark providing an industry-standard method to measure ultra-low-power capabilities of MCUs.

Copyright © 2015–2018, Texas Instruments Incorporated

MSP430 FRAM Technology – How-To and Best Practices FRAM is a nonvolatile memory technology that behaves like SRAM while enabling a whole host of new applications, but also changes the way firmware should be designed. This application report outlines the how-to and best practices of using FRAM technology in MSP430 from an embedded software development perspective. It discusses how to implement a memory layout according to application-specific code, constant, data space requirements, the use of FRAM to optimize application energy consumption, and the use of the Memory Protection Unit (MPU) to maximize application robustness by protecting the program code against unintended write accesses.

MSP430 32-kHz Crystal Oscillators Selection of the correct crystal, correct load circuit, and proper board layout are important for a stable crystal oscillator. This application report summarizes crystal oscillator function and explains the parameters to select the correct crystal for MSP430 ultra-low-power operation. In addition, hints and examples for correct board layout are given. The document also contains detailed information on the possible oscillator tests to ensure stable oscillator operation in mass production.

MSP430 System-Level ESD Considerations System-Level ESD has become increasingly demanding with silicon technology scaling towards lower voltages and the need for designing cost-effective and ultra-low-power components. This application report addresses three different ESD topics to help board designers and OEMs understand and design robust system-level designs.

8.5 Related Links

Table 8-2 lists quick access links. Categories include technical documents, support and community resources, tools and software, and quick access to sample or buy.

Table 8-2. Related Links

PARTS	PRODUCT FOLDER	ORDER NOW	TECHNICAL DOCUMENTS	TOOLS & SOFTWARE	SUPPORT & COMMUNITY
MSP430FR5972	Click here	Click here	Click here	Click here	Click here
MSP430FR59721	Click here	Click here	Click here	Click here	Click here
MSP430FR5970	Click here	Click here	Click here	Click here	Click here
MSP430FR5922	Click here	Click here	Click here	Click here	Click here
MSP430FR59221	Click here	Click here	Click here	Click here	Click here
MSP430FR5872	Click here	Click here	Click here	Click here	Click here
MSP430FR58721	Click here	Click here	Click here	Click here	Click here
MSP430FR5870	Click here	Click here	Click here	Click here	Click here

8.6 Community Resources

The following links connect to TI community resources. Linked contents are provided "AS IS" by the respective contributors. They do not constitute TI specifications and do not necessarily reflect TI's views; see TI's Terms of Use.

TI E2E™ Community
TI's Engineer-to-Engineer (E2E) Community. Created to foster collaboration among engineers. At e2e.ti.com, you can ask questions, share knowledge, explore ideas, and help solve problems with fellow engineers.

TI Embedded Processors Wiki
Texas Instruments Embedded Processors Wiki. Established to help developers get started with embedded processors from Texas Instruments and to foster innovation and growth of general knowledge about the hardware and software surrounding these devices.

8.7 Trademarks

EnergyTrace++, MSP430, MSP430Ware, EnergyTrace, ULP Advisor, Code Composer Studio, E2E are trademarks of Texas Instruments.
ULPMark, ULPBench are trademarks of Embedded Microprocessor Benchmark Consortium.
Microsoft is a registered trademark of Microsoft Corporation.
All other trademarks are the property of their respective owners.

8.8 Electrostatic Discharge Caution

This integrated circuit can be damaged by ESD. Texas Instruments recommends that all integrated circuits be handled with appropriate precautions. Failure to observe proper handling and installation procedures can cause damage.

ESD damage can range from subtle performance degradation to complete device failure. Precision integrated circuits may be more susceptible to damage because very small parametric changes could cause the device not to meet its published specifications.

8.9 Export Control Notice

Recipient agrees to not knowingly export or re-export, directly or indirectly, any product or technical data (as defined by the U.S., EU, and other Export Administration Regulations) including software, or any controlled product restricted by other applicable national regulations, received from disclosing party under nondisclosure obligations (if any), or any direct product of such technology, to any destination to which such export or re-export is restricted or prohibited by U.S. or other applicable laws, without obtaining prior authorization from U.S. Department of Commerce and other competent Government authorities to the extent required by those laws.

8.10 Glossary

TI Glossary This glossary lists and explains terms, acronyms, and definitions.

Copyright © 2015–2018, Texas Instruments Incorporated

9 Mechanical, Packaging, and Orderable Information

The following pages include mechanical, packaging, and orderable information. This information is the most current data available for the designated devices. This data is subject to change without notice and revision of this document. For browser-based versions of this data sheet, refer to the left-hand navigation.

PACKAGING INFORMATION

Orderable part number	Status (1)	Material type (2)	Package | Pins	Package qty | Carrier	RoHS (3)	Lead finish/ Ball material (4)	MSL rating/ Peak reflow (5)	Op temp (°C)	Part marking (6)
MSP430FR5870IPMR	Active	Production	LQFP (PM) | 64	1000 | LARGE T&R	Yes	NIPDAU	Level-3-260C-168 HR	-40 to 85	FR5870
MSP430FR5870IPMR.A	Active	Production	LQFP (PM) | 64	1000 | LARGE T&R	Yes	NIPDAU	Level-3-260C-168 HR	-40 to 85	FR5870
MSP430FR5870IRGCR	Active	Production	VQFN (RGC) | 64	2000 | LARGE T&R	Yes	NIPDAU	Level-3-260C-168 HR	-40 to 85	FR5870
MSP430FR5870IRGCR.A	Active	Production	VQFN (RGC) | 64	2000 | LARGE T&R	Yes	NIPDAU	Level-3-260C-168 HR	-40 to 85	FR5870
MSP430FR5870IRGCR.B	Active	Production	VQFN (RGC) | 64	2000 | LARGE T&R	-	Call TI	Call TI	-40 to 85	
MSP430FR58721IPMR	Active	Production	LQFP (PM) | 64	1000 | LARGE T&R	Yes	NIPDAU	Level-3-260C-168 HR	-40 to 85	FR58721
MSP430FR58721IPMR.A	Active	Production	LQFP (PM) | 64	1000 | LARGE T&R	Yes	NIPDAU	Level-3-260C-168 HR	-40 to 85	FR58721
MSP430FR58721IRGCR	Active	Production	VQFN (RGC) | 64	2000 | LARGE T&R	Yes	NIPDAU	Level-3-260C-168 HR	-40 to 85	FR58721
MSP430FR58721IRGCR.A	Active	Production	VQFN (RGC) | 64	2000 | LARGE T&R	Yes	NIPDAU	Level-3-260C-168 HR	-40 to 85	FR58721
MSP430FR5872IPMR	Active	Production	LQFP (PM) | 64	1000 | LARGE T&R	Yes	NIPDAU	Level-3-260C-168 HR	-40 to 85	FR5872
MSP430FR5872IPMR.A	Active	Production	LQFP (PM) | 64	1000 | LARGE T&R	Yes	NIPDAU	Level-3-260C-168 HR	-40 to 85	FR5872
MSP430FR5872IRGCR	Active	Production	VQFN (RGC) | 64	2000 | LARGE T&R	Yes	NIPDAU	Level-3-260C-168 HR	-40 to 85	FR5872
MSP430FR5872IRGCR.A	Active	Production	VQFN (RGC) | 64	2000 | LARGE T&R	Yes	NIPDAU	Level-3-260C-168 HR	-40 to 85	FR5872
MSP430FR5872IRGCR.B	Active	Production	VQFN (RGC) | 64	2000 | LARGE T&R	-	Call TI	Call TI	-40 to 85	
MSP430FR59221IG56R	Active	Production	TSSOP (DGG) | 56	2000 | LARGE T&R	Yes	NIPDAU	Level-3-260C-168 HR	-40 to 85	FR59221
MSP430FR59221IG56R.A	Active	Production	TSSOP (DGG) | 56	2000 | LARGE T&R	Yes	NIPDAU	Level-3-260C-168 HR	-40 to 85	FR59221
MSP430FR59221IPMR	Active	Production	LQFP (PM) | 64	1000 | LARGE T&R	Yes	NIPDAU	Level-3-260C-168 HR	-40 to 85	FR59221
MSP430FR59221IPMR.A	Active	Production	LQFP (PM) | 64	1000 | LARGE T&R	Yes	NIPDAU	Level-3-260C-168 HR	-40 to 85	FR59221
MSP430FR59221IRGCR	Active	Production	VQFN (RGC) | 64	2000 | LARGE T&R	Yes	NIPDAU	Level-3-260C-168 HR	-40 to 85	FR59221
MSP430FR59221IRGCR.A	Active	Production	VQFN (RGC) | 64	2000 | LARGE T&R	Yes	NIPDAU	Level-3-260C-168 HR	-40 to 85	FR59221
MSP430FR59221IRGCR.B	Active	Production	VQFN (RGC) | 64	2000 | LARGE T&R	-	Call TI	Call TI	-40 to 85	
MSP430FR5922IG56R	Active	Production	TSSOP (DGG) | 56	2000 | LARGE T&R	Yes	NIPDAU	Level-3-260C-168 HR	-40 to 85	FR5922
MSP430FR5922IG56R.A	Active	Production	TSSOP (DGG) | 56	2000 | LARGE T&R	Yes	NIPDAU	Level-3-260C-168 HR	-40 to 85	FR5922
MSP430FR5922IPM	Active	Production	LQFP (PM) | 64	160 | JEDEC TRAY (10+1)	Yes	NIPDAU	Level-3-260C-168 HR	-40 to 85	FR5922
MSP430FR5922IPM.A	Active	Production	LQFP (PM) | 64	160 | JEDEC TRAY (10+1)	Yes	NIPDAU	Level-3-260C-168 HR	-40 to 85	FR5922
MSP430FR5922IPMR	Active	Production	LQFP (PM) | 64	1000 | LARGE T&R	Yes	NIPDAU	Level-3-260C-168 HR	-40 to 85	FR5922
MSP430FR5922IPMR.A	Active	Production	LQFP (PM) | 64	1000 | LARGE T&R	Yes	NIPDAU	Level-3-260C-168 HR	-40 to 85	FR5922
MSP430FR5922IRGCR	Active	Production	VQFN (RGC) | 64	2000 | LARGE T&R	Yes	NIPDAU	Level-3-260C-168 HR	-40 to 85	FR5922

Orderable part number	Status (1)	Material type (2)	Package | Pins	Package qty | Carrier	RoHS (3)	Lead finish/ Ball material (4)	MSL rating/ Peak reflow (5)	Op temp (°C)	Part marking (6)
MSP430FR5922IRGCR.A	Active	Production	VQFN (RGC) | 64	2000 | LARGE T&R	Yes	NIPDAU	Level-3-260C-168 HR	-40 to 85	FR5922
MSP430FR5922IRGCR.B	Active	Production	VQFN (RGC) | 64	2000 | LARGE T&R	-	Call TI	Call TI	-40 to 85	
MSP430FR5970IPMR	Active	Production	LQFP (PM) | 64	1000 | LARGE T&R	Yes	NIPDAU	Level-3-260C-168 HR	-40 to 85	FR5970
MSP430FR5970IPMR.A	Active	Production	LQFP (PM) | 64	1000 | LARGE T&R	Yes	NIPDAU	Level-3-260C-168 HR	-40 to 85	FR5970
MSP430FR5970IRGCR	Active	Production	VQFN (RGC) | 64	2000 | LARGE T&R	Yes	NIPDAU	Level-3-260C-168 HR	-40 to 85	FR5970
MSP430FR5970IRGCR.A	Active	Production	VQFN (RGC) | 64	2000 | LARGE T&R	Yes	NIPDAU	Level-3-260C-168 HR	-40 to 85	FR5970
MSP430FR5970IRGCR.B	Active	Production	VQFN (RGC) | 64	2000 | LARGE T&R	-	Call TI	Call TI	-40 to 85	
MSP430FR59721IPM	Active	Production	LQFP (PM) | 64	160 | JEDEC TRAY (10+1)	Yes	NIPDAU	Level-3-260C-168 HR	-40 to 85	FR59721
MSP430FR59721IPM.A	Active	Production	LQFP (PM) | 64	160 | JEDEC TRAY (10+1)	Yes	NIPDAU	Level-3-260C-168 HR	-40 to 85	FR59721
MSP430FR59721IPMR	Active	Production	LQFP (PM) | 64	1000 | LARGE T&R	Yes	NIPDAU	Level-3-260C-168 HR	-40 to 85	FR59721
MSP430FR59721IPMR.A	Active	Production	LQFP (PM) | 64	1000 | LARGE T&R	Yes	NIPDAU	Level-3-260C-168 HR	-40 to 85	FR59721
MSP430FR59721IRGCR	Active	Production	VQFN (RGC) | 64	2000 | LARGE T&R	Yes	NIPDAU	Level-3-260C-168 HR	-40 to 85	FR59721
MSP430FR59721IRGCR.A	Active	Production	VQFN (RGC) | 64	2000 | LARGE T&R	Yes	NIPDAU	Level-3-260C-168 HR	-40 to 85	FR59721
MSP430FR59721IRGCR.B	Active	Production	VQFN (RGC) | 64	2000 | LARGE T&R	-	Call TI	Call TI	-40 to 85	
MSP430FR5972IPM	Active	Production	LQFP (PM) | 64	160 | JEDEC TRAY (10+1)	Yes	NIPDAU	Level-3-260C-168 HR	-40 to 85	FR5972
MSP430FR5972IPM.A	Active	Production	LQFP (PM) | 64	160 | JEDEC TRAY (10+1)	Yes	NIPDAU	Level-3-260C-168 HR	-40 to 85	FR5972
MSP430FR5972IPMR	Active	Production	LQFP (PM) | 64	1000 | LARGE T&R	Yes	NIPDAU	Level-3-260C-168 HR	-40 to 85	FR5972
MSP430FR5972IPMR.A	Active	Production	LQFP (PM) | 64	1000 | LARGE T&R	Yes	NIPDAU	Level-3-260C-168 HR	-40 to 85	FR5972
MSP430FR5972IRGCR	Active	Production	VQFN (RGC) | 64	2000 | LARGE T&R	Yes	NIPDAU	Level-3-260C-168 HR	-40 to 85	FR5972
MSP430FR5972IRGCR.A	Active	Production	VQFN (RGC) | 64	2000 | LARGE T&R	Yes	NIPDAU	Level-3-260C-168 HR	-40 to 85	FR5972
MSP430FR5972IRGCR.B	Active	Production	VQFN (RGC) | 64	2000 | LARGE T&R	-	Call TI	Call TI	-40 to 85	

(1) **Status:** For more details on status, see our product life cycle.

(2) **Material type:** When designated, preproduction parts are prototypes/experimental devices, and are not yet approved or released for full production. Testing and final process, including without limitation quality assurance, reliability performance testing, and/or process qualification, may not yet be complete, and this item is subject to further changes or possible discontinuation. If available for ordering, purchases will be subject to an additional waiver at checkout, and are intended for early internal evaluation purposes only. These items are sold without warranties of any kind.

(3) **RoHS values:** Yes, No, RoHS Exempt. See the TI RoHS Statement for additional information and value definition.

(4) **Lead finish/Ball material:** Parts may have multiple material finish options. Finish options are separated by a vertical ruled line. Lead finish/Ball material values may wrap to two lines if the finish value exceeds the maximum column width.

(5) **MSL rating/Peak reflow:** The moisture sensitivity level ratings and peak solder (reflow) temperatures. In the event that a part has multiple moisture sensitivity ratings, only the lowest level per JEDEC standards is shown. Refer to the shipping label for the actual reflow temperature that will be used to mount the part to the printed circuit board.

(6) **Part marking:** There may be an additional marking, which relates to the logo, the lot trace code information, or the environmental category of the part.

Multiple part markings will be inside parentheses. Only one part marking contained in parentheses and separated by a "~" will appear on a part. If a line is indented then it is a continuation of the previous line and the two combined represent the entire part marking for that device.

Important Information and Disclaimer: The information provided on this page represents TI's knowledge and belief as of the date that it is provided. TI bases its knowledge and belief on information provided by third parties, and makes no representation or warranty as to the accuracy of such information. Efforts are underway to better integrate information from third parties. TI has taken and continues to take reasonable steps to provide representative and accurate information but may not have conducted destructive testing or chemical analysis on incoming materials and chemicals. TI and TI suppliers consider certain information to be proprietary, and thus CAS numbers and other limited information may not be available for release.

In no event shall TI's liability arising out of such information exceed the total purchase price of the TI part(s) at issue in this document sold by TI to Customer on an annual basis.

TAPE AND REEL INFORMATION

REEL DIMENSIONS

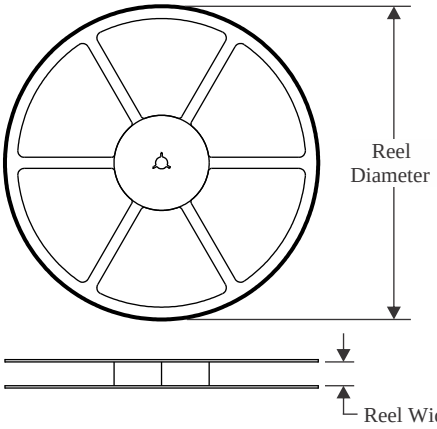

TAPE DIMENSIONS

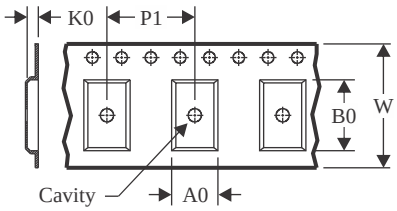

A0	Dimension designed to accommodate the component width
B0	Dimension designed to accommodate the component length
K0	Dimension designed to accommodate the component thickness
W	Overall width of the carrier tape
P1	Pitch between successive cavity centers

QUADRANT ASSIGNMENTS FOR PIN 1 ORIENTATION IN TAPE

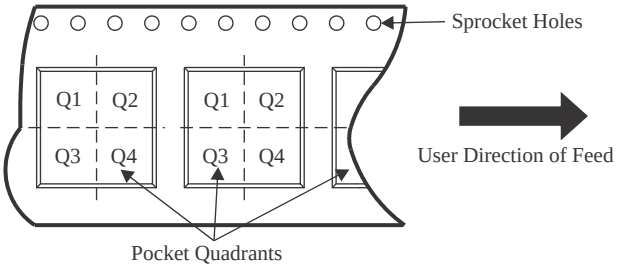

*All dimensions are nominal

Device	Package Type	Package Drawing	Pins	SPQ	Reel Diameter (mm)	Reel Width W1 (mm)	A0 (mm)	B0 (mm)	K0 (mm)	P1 (mm)	W (mm)	Pin1 Quadrant
MSP430FR5870IPMR	LQFP	PM	64	1000	330.0	24.4	12.5	12.5	2.2	16.0	24.0	Q2
MSP430FR5870IRGCR	VQFN	RGC	64	2000	330.0	16.4	9.3	9.3	1.1	12.0	16.0	Q2
MSP430FR58721IPMR	LQFP	PM	64	1000	330.0	24.4	12.5	12.5	2.2	16.0	24.0	Q2
MSP430FR58721IRGCR	VQFN	RGC	64	2000	330.0	16.4	9.3	9.3	1.1	12.0	16.0	Q2
MSP430FR5872IPMR	LQFP	PM	64	1000	330.0	24.4	12.5	12.5	2.2	16.0	24.0	Q2
MSP430FR5872IRGCR	VQFN	RGC	64	2000	330.0	16.4	9.3	9.3	1.1	12.0	16.0	Q2
MSP430FR59221IG56R	TSSOP	DGG	56	2000	330.0	24.4	8.6	15.6	1.8	12.0	24.0	Q1
MSP430FR59221IPMR	LQFP	PM	64	1000	330.0	24.4	12.5	12.5	2.2	16.0	24.0	Q2
MSP430FR59221IRGCR	VQFN	RGC	64	2000	330.0	16.4	9.3	9.3	1.1	12.0	16.0	Q2
MSP430FR5922IG56R	TSSOP	DGG	56	2000	330.0	24.4	8.6	15.6	1.8	12.0	24.0	Q1
MSP430FR5922IPMR	LQFP	PM	64	1000	330.0	24.4	12.5	12.5	2.2	16.0	24.0	Q2
MSP430FR5922IRGCR	VQFN	RGC	64	2000	330.0	16.4	9.3	9.3	1.1	12.0	16.0	Q2
MSP430FR5970IPMR	LQFP	PM	64	1000	330.0	24.4	12.5	12.5	2.2	16.0	24.0	Q2
MSP430FR5970IRGCR	VQFN	RGC	64	2000	330.0	16.4	9.3	9.3	1.1	12.0	16.0	Q2
MSP430FR59721IPMR	LQFP	PM	64	1000	330.0	24.4	12.5	12.5	2.2	16.0	24.0	Q2
MSP430FR59721IRGCR	VQFN	RGC	64	2000	330.0	16.4	9.3	9.3	1.1	12.0	16.0	Q2

Device	Package Type	Package Drawing	Pins	SPQ	Reel Diameter (mm)	Reel Width W1 (mm)	A0 (mm)	B0 (mm)	K0 (mm)	P1 (mm)	W (mm)	Pin1 Quadrant
MSP430FR5972IPMR	LQFP	PM	64	1000	330.0	24.4	12.5	12.5	2.2	16.0	24.0	Q2
MSP430FR5972IRGCR	VQFN	RGC	64	2000	330.0	16.4	9.3	9.3	1.1	12.0	16.0	Q2

TAPE AND REEL BOX DIMENSIONS

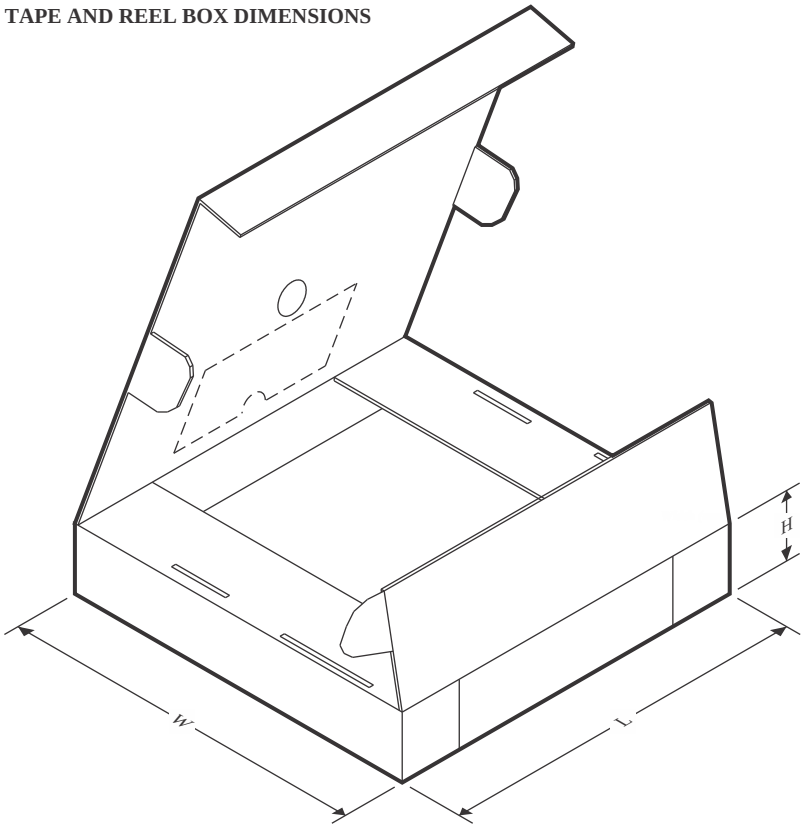

*All dimensions are nominal

Device	Package Type	Package Drawing	Pins	SPQ	Length (mm)	Width (mm)	Height (mm)
MSP430FR5870IPMR	LQFP	PM	64	1000	336.6	336.6	41.3
MSP430FR5870IRGCR	VQFN	RGC	64	2000	367.0	367.0	38.0
MSP430FR58721IPMR	LQFP	PM	64	1000	336.6	336.6	41.3
MSP430FR58721IRGCR	VQFN	RGC	64	2000	367.0	367.0	38.0
MSP430FR5872IPMR	LQFP	PM	64	1000	336.6	336.6	41.3
MSP430FR5872IRGCR	VQFN	RGC	64	2000	367.0	367.0	38.0
MSP430FR59221IG56R	TSSOP	DGG	56	2000	350.0	350.0	43.0
MSP430FR59221IPMR	LQFP	PM	64	1000	336.6	336.6	41.3
MSP430FR59221IRGCR	VQFN	RGC	64	2000	367.0	367.0	38.0
MSP430FR5922IG56R	TSSOP	DGG	56	2000	350.0	350.0	43.0
MSP430FR5922IPMR	LQFP	PM	64	1000	336.6	336.6	41.3
MSP430FR5922IRGCR	VQFN	RGC	64	2000	367.0	367.0	38.0
MSP430FR5970IPMR	LQFP	PM	64	1000	336.6	336.6	41.3
MSP430FR5970IRGCR	VQFN	RGC	64	2000	367.0	367.0	38.0
MSP430FR59721IPMR	LQFP	PM	64	1000	336.6	336.6	41.3
MSP430FR59721IRGCR	VQFN	RGC	64	2000	367.0	367.0	38.0
MSP430FR5972IPMR	LQFP	PM	64	1000	336.6	336.6	41.3
MSP430FR5972IRGCR	VQFN	RGC	64	2000	367.0	367.0	38.0

TRAY

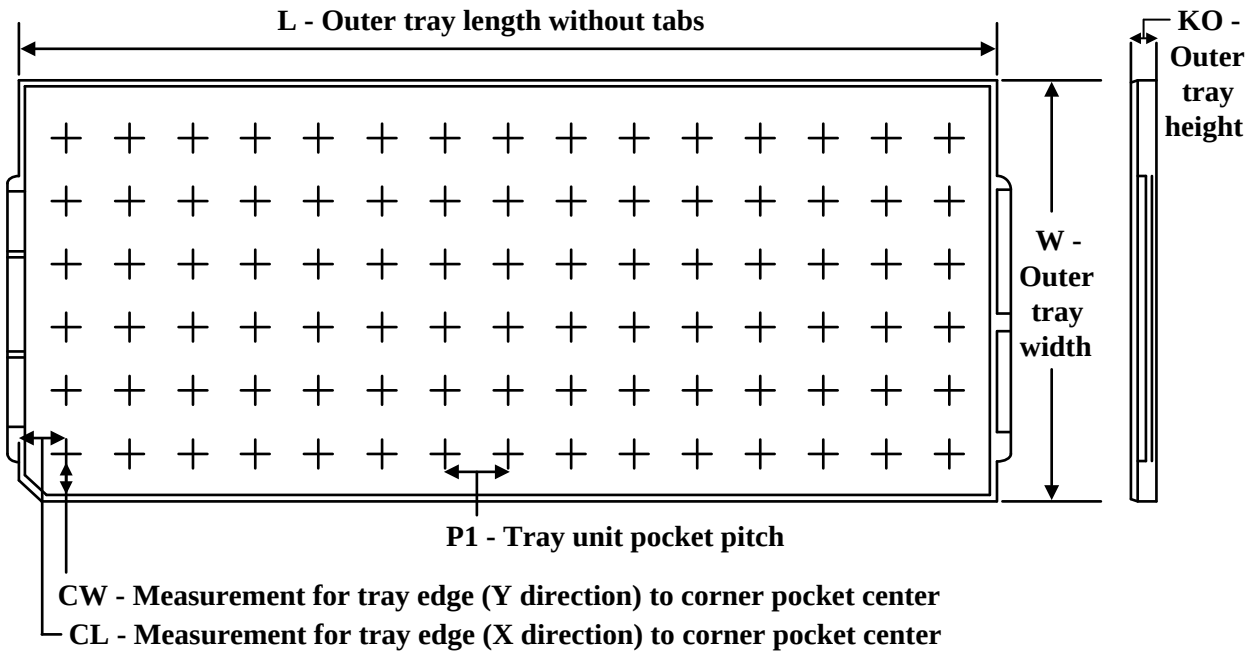

Chamfer on Tray corner indicates Pin 1 orientation of packed units.

*All dimensions are nominal

Device	Package Name	Package Type	Pins	SPQ	Unit array matrix	Max temperature (°C)	L (mm)	W (mm)	K0 (µm)	P1 (mm)	CL (mm)	CW (mm)
MSP430FR5922IPM	PM	LQFP	64	160	8 X 20	150	315	135.9	7620	15.2	13.1	13
MSP430FR5922IPM.A	PM	LQFP	64	160	8 X 20	150	315	135.9	7620	15.2	13.1	13
MSP430FR59721IPM	PM	LQFP	64	160	8 X 20	150	315	135.9	7620	15.2	13.1	13
MSP430FR59721IPM.A	PM	LQFP	64	160	8 X 20	150	315	135.9	7620	15.2	13.1	13
MSP430FR5972IPM	PM	LQFP	64	160	8 X 20	150	315	135.9	7620	15.2	13.1	13
MSP430FR5972IPM.A	PM	LQFP	64	160	8 X 20	150	315	135.9	7620	15.2	13.1	13

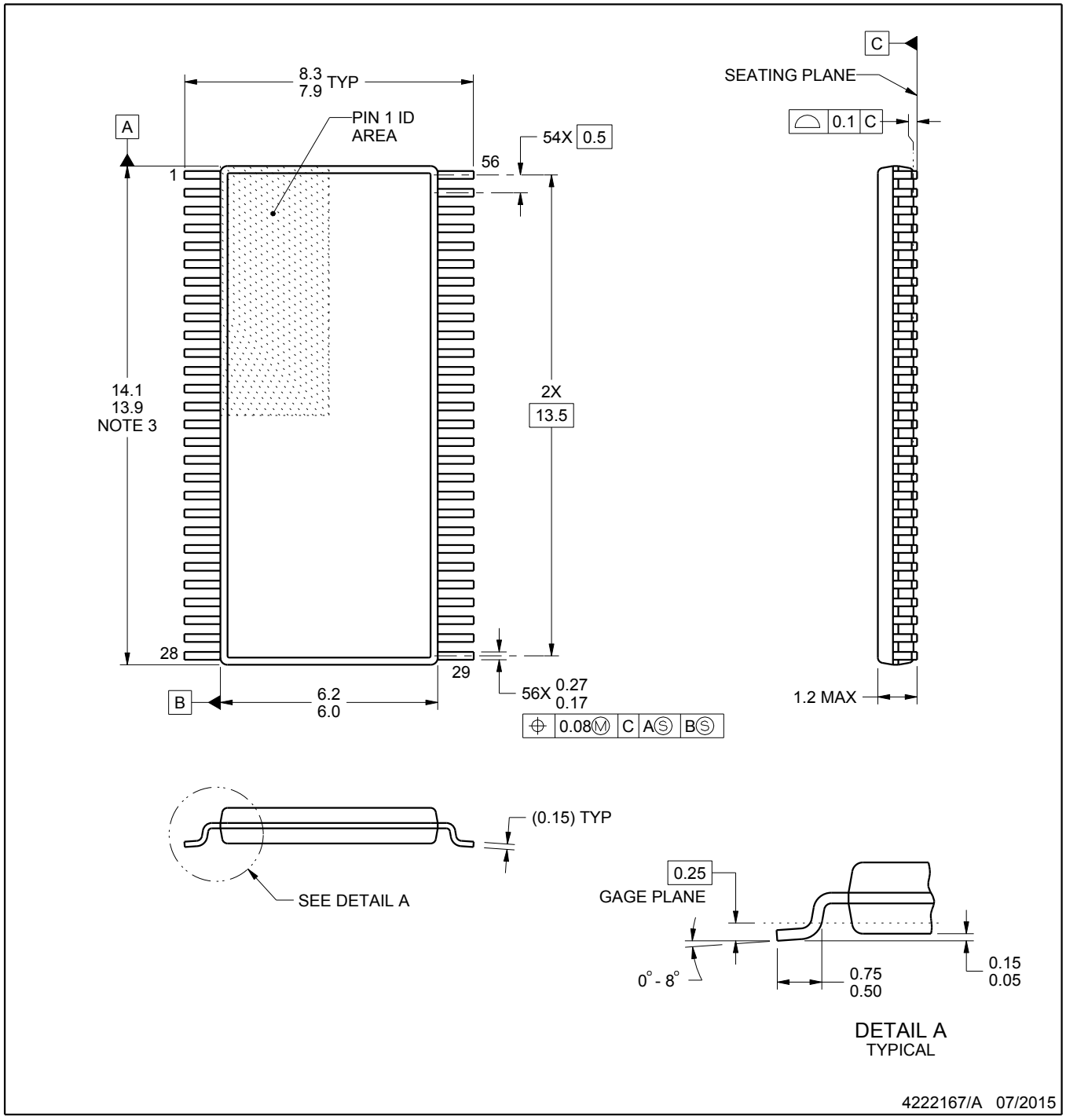

NOTES:

1. All linear dimensions are in millimeters. Any dimensions in parenthesis are for reference only. Dimensioning and tolerancing per ASME Y14.5M.
2. This drawing is subject to change without notice.
3. This dimension does not include mold flash, protrusions, or gate burrs. Mold flash, protrusions, or gate burrs shall not exceed 0.15 mm per side.
4. Reference JEDEC registration MO-153.

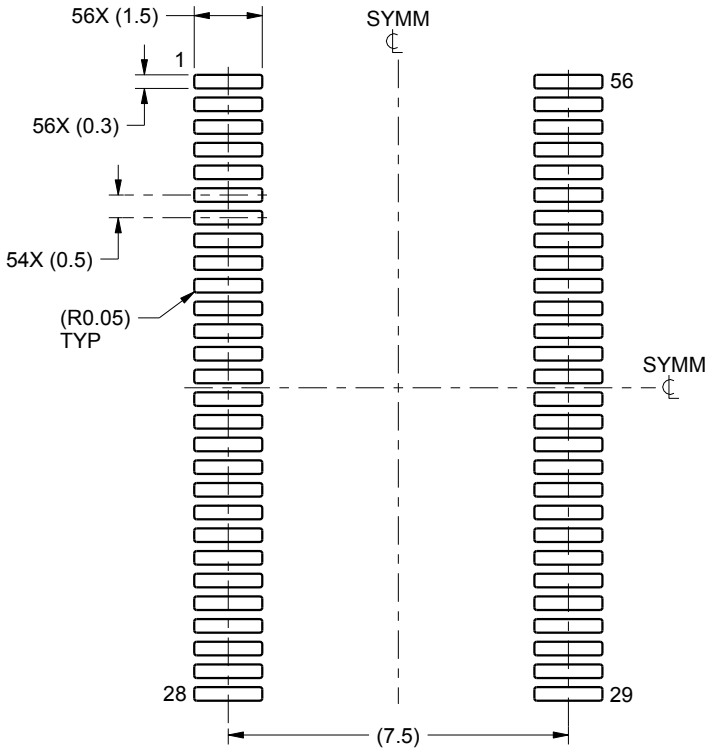

LAND PATTERN EXAMPLE
SCALE:6X

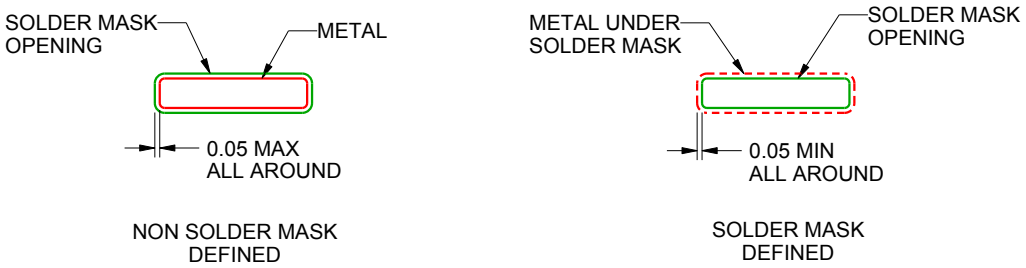

SOLDER MASK DETAILS

4222167/A 07/2015

NOTES: (continued)

5. Publication IPC-7351 may have alternate designs.
6. Solder mask tolerances between and around signal pads can vary based on board fabrication site.

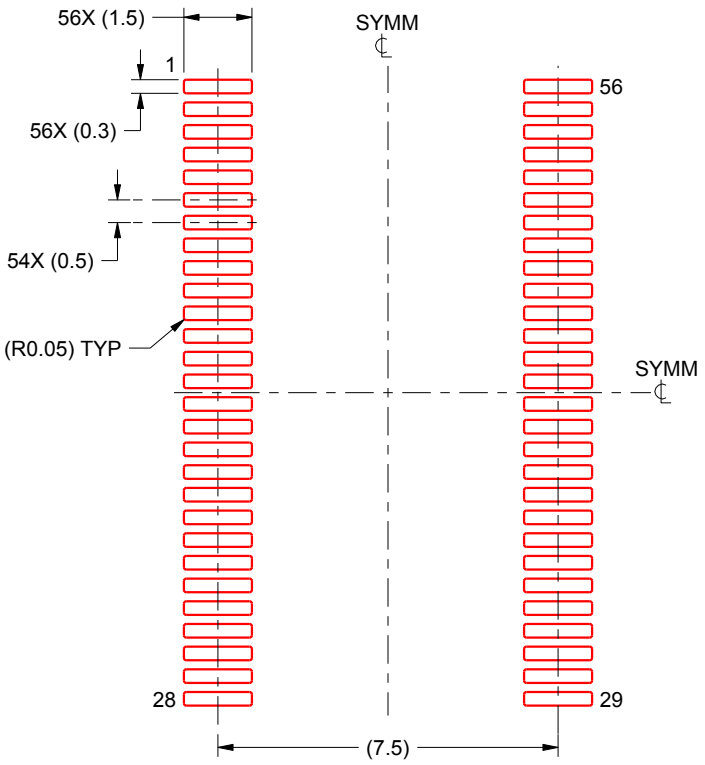

SOLDER PASTE EXAMPLE
BASED ON 0.125 mm THICK STENCIL
SCALE:6X

4222167/A 07/2015

NOTES: (continued)

7. Laser cutting apertures with trapezoidal walls and rounded corners may offer better paste release. IPC-7525 may have alternate design recommendations.
8. Board assembly site may have different recommendations for stencil design.

GENERIC PACKAGE VIEW

RGC 64

VQFN - 1 mm max height

9 x 9, 0.5 mm pitch

PLASTIC QUAD FLATPACK - NO LEAD

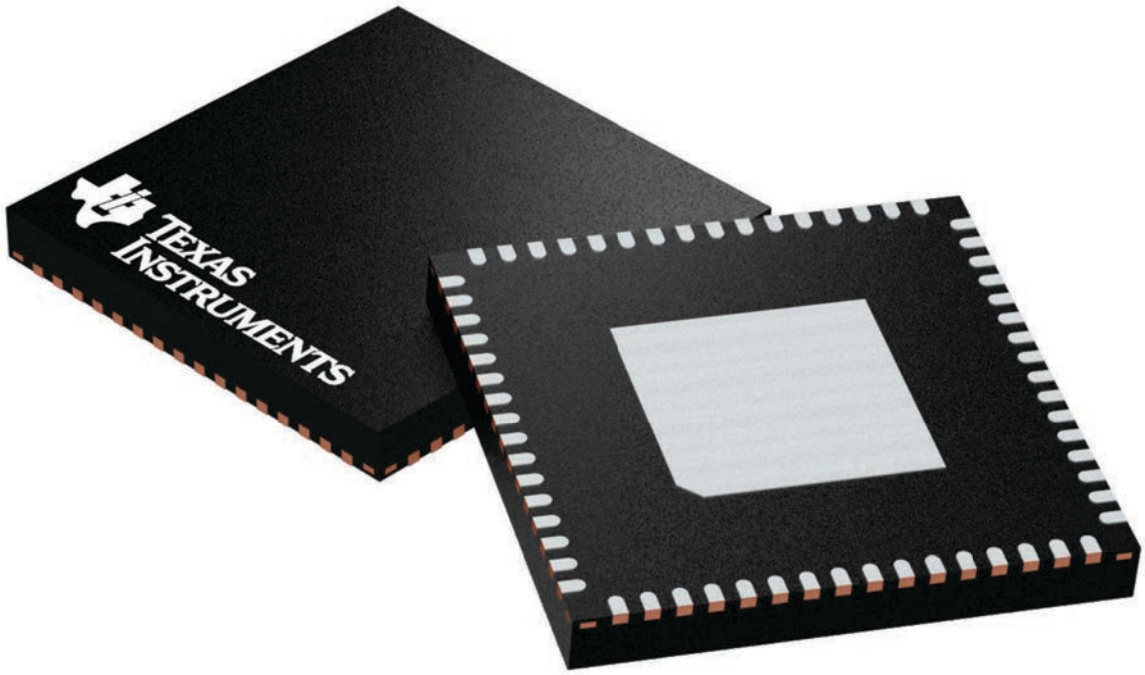

Images above are just a representation of the package family, actual package may vary.
Refer to the product data sheet for package details.

4224597/A

PACKAGE OUTLINE

RGC0064B

VQFN - 1 mm max height

PLASTIC QUAD FLATPACK - NO LEAD

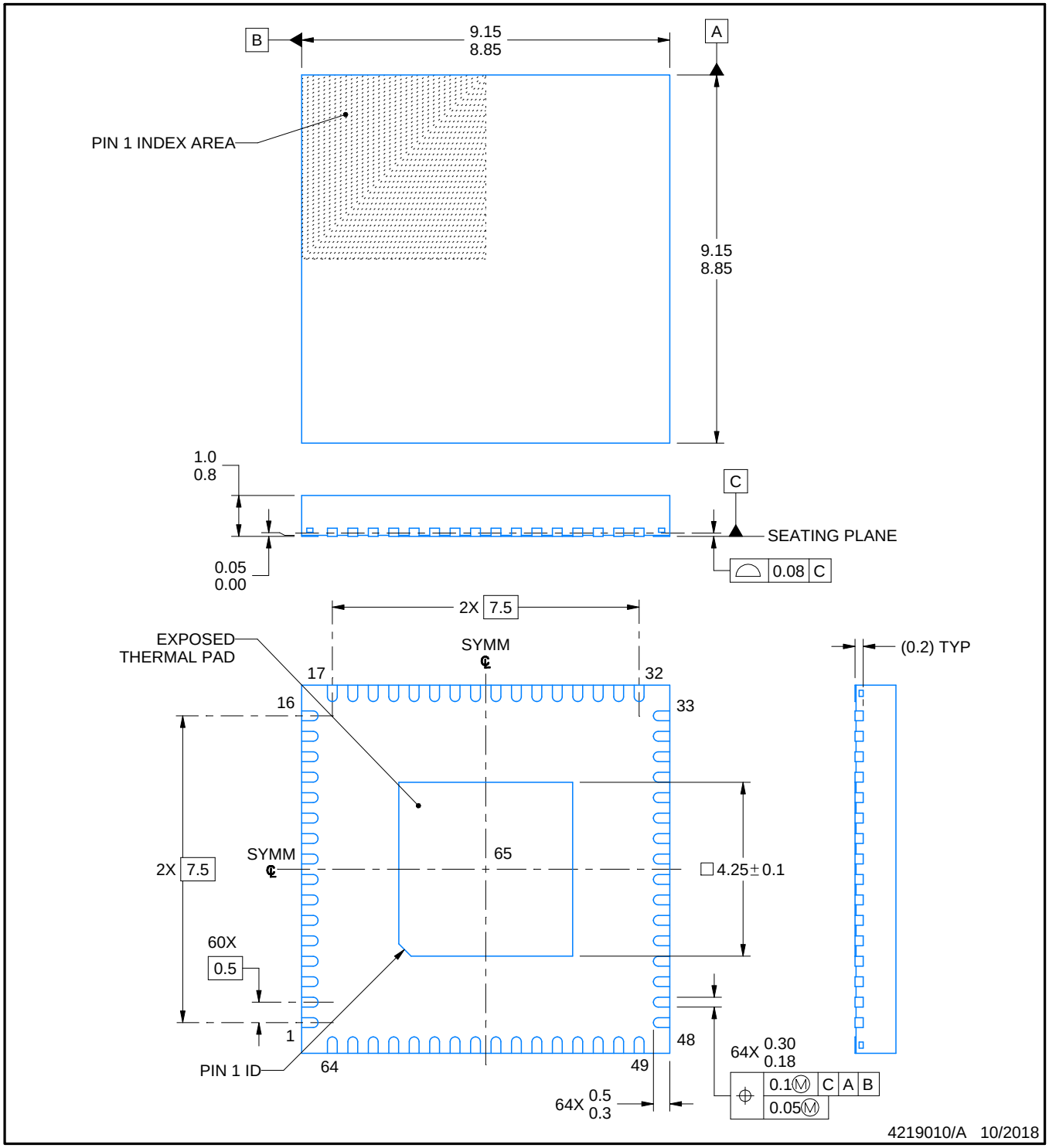

NOTES:

1. All linear dimensions are in millimeters. Any dimensions in parenthesis are for reference only. Dimensioning and tolerancing per ASME Y14.5M.
2. This drawing is subject to change without notice.
3. The package thermal pad must be soldered to the printed circuit board for thermal and mechanical performance.

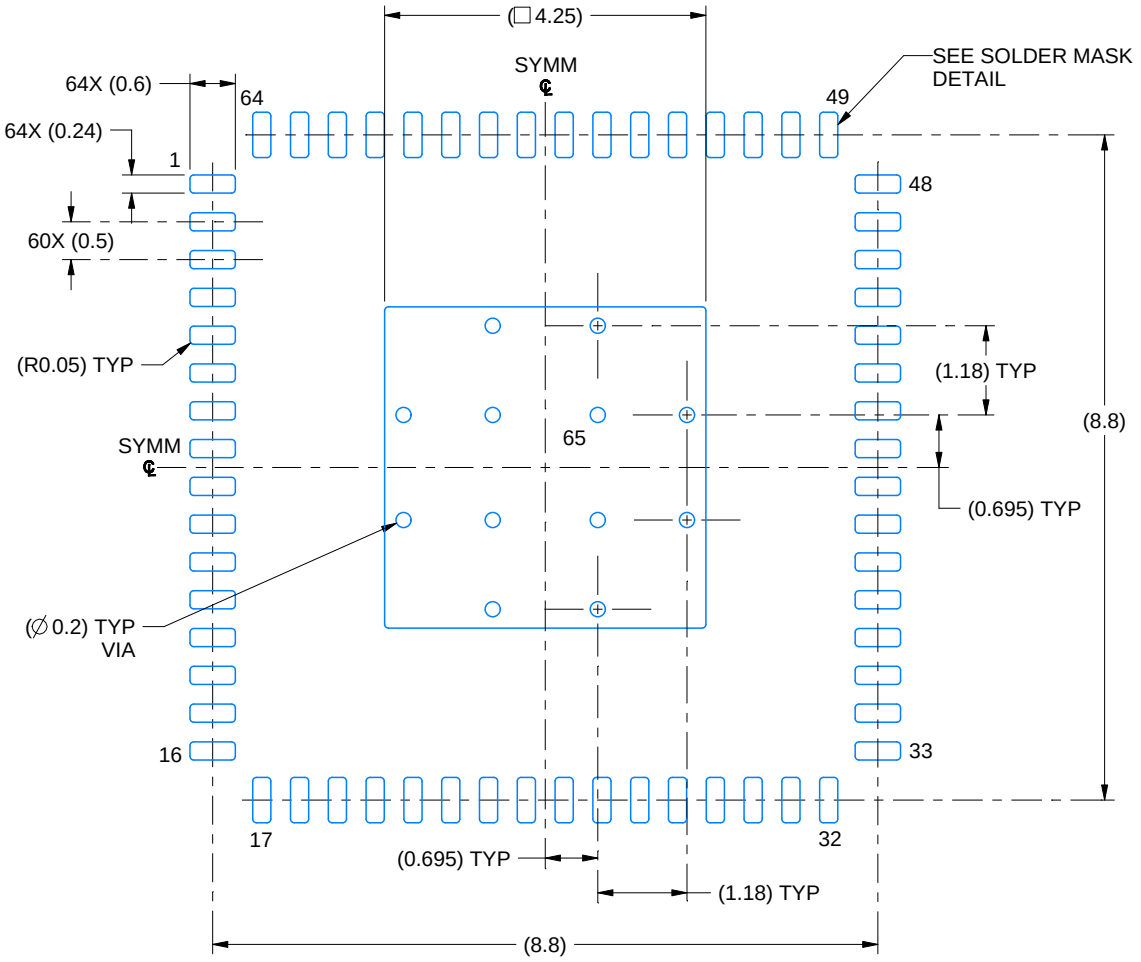

LAND PATTERN EXAMPLE
EXPOSED METAL SHOWN
SCALE: 10X

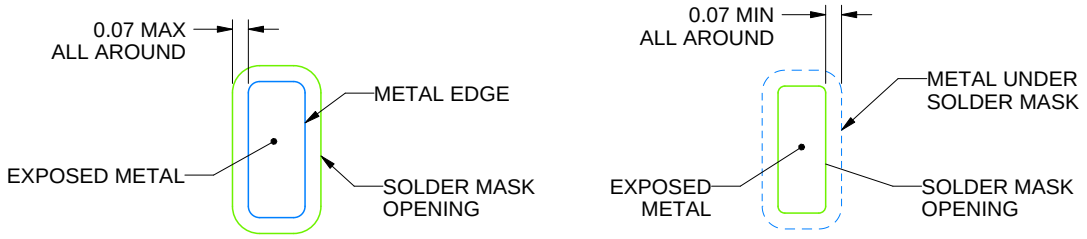

NON SOLDER MASK DEFINED (PREFERRED)

SOLDER MASK DEFINED

SOLDER MASK DETAILS

4219010/A 10/2018

NOTES: (continued)

4. This package is designed to be soldered to a thermal pad on the board. For more information, see Texas Instruments literature number SLUA271 (www.ti.com/lit/slua271).
5. Vias are optional depending on application, refer to device data sheet. If any vias are implemented, refer to their locations shown on this view. It is recommended that vias under paste be filled, plugged or tented.

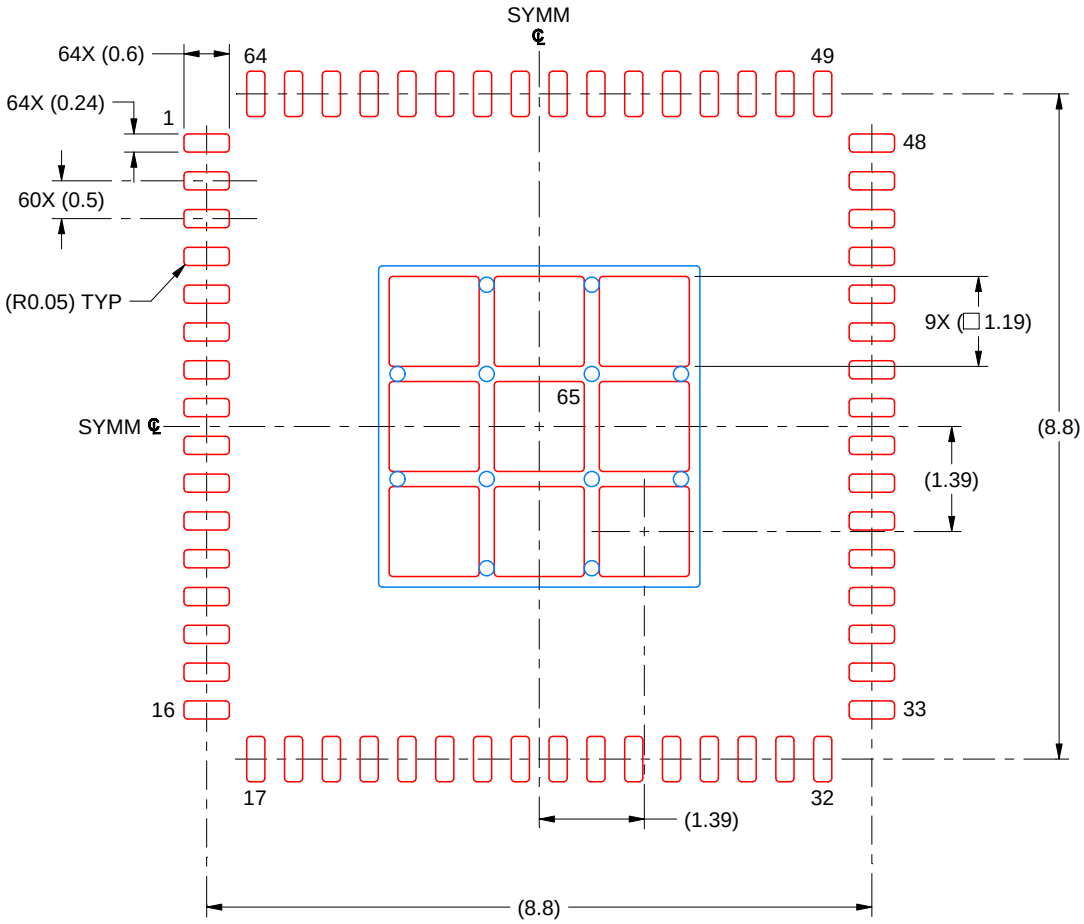

SOLDER PASTE EXAMPLE
BASED ON 0.125 MM THICK STENCIL
SCALE: 10X

EXPOSED PAD 65
71% PRINTED SOLDER COVERAGE BY AREA UNDER PACKAGE

4219010/A 10/2018

NOTES: (continued)

6. Laser cutting apertures with trapezoidal walls and rounded corners may offer better paste release. IPC-7525 may have alternate design recommendations.

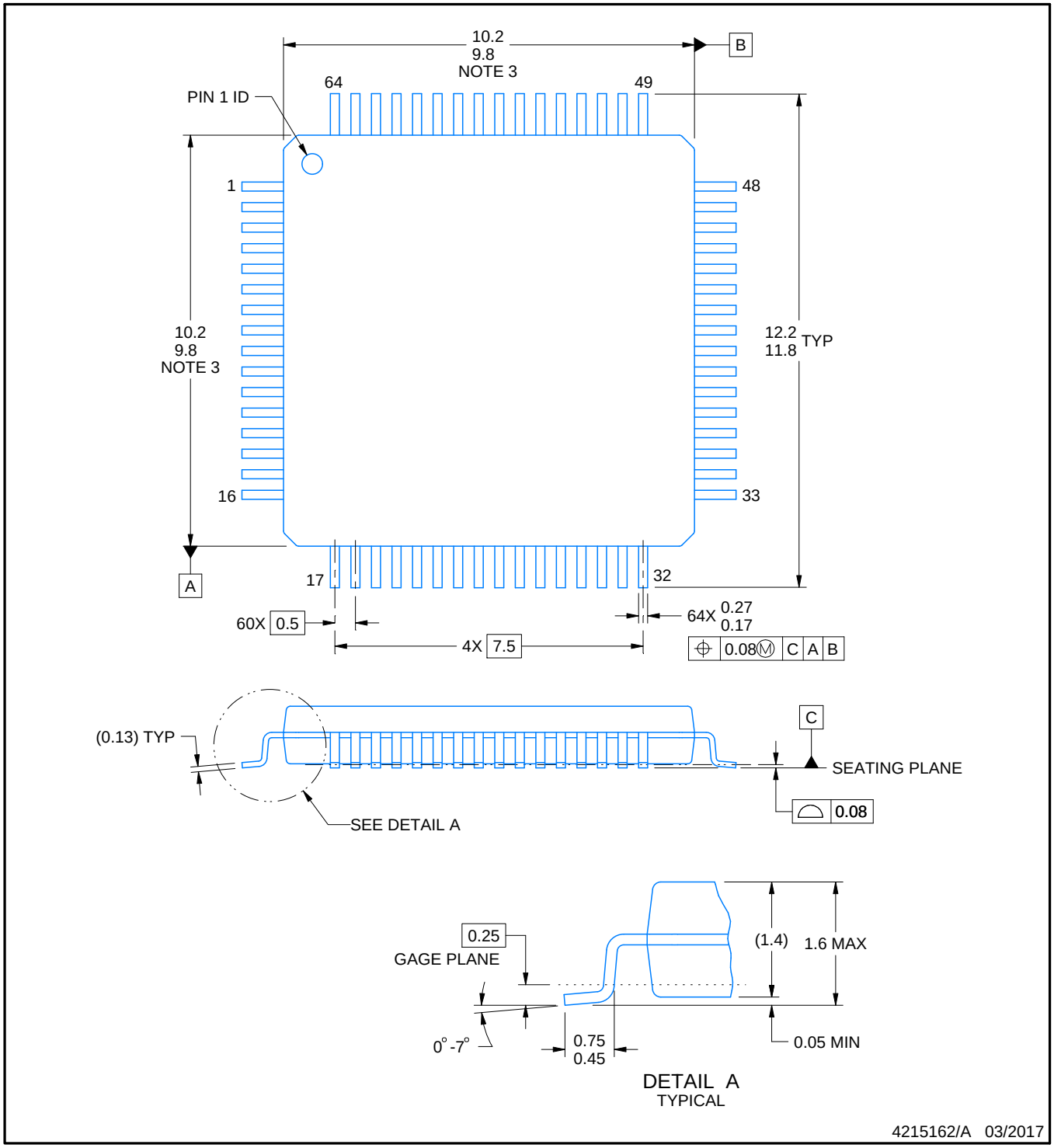

NOTES:

1. All linear dimensions are in millimeters. Any dimensions in parenthesis are for reference only. Dimensioning and tolerancing per ASME Y14.5M.
2. This drawing is subject to change without notice.
3. This dimension does not include mold flash, protrusions, or gate burrs. Mold flash, protrusions, or gate burrs shall not exceed 0.15 mm per side.
4. Reference JEDEC registration MS-026.

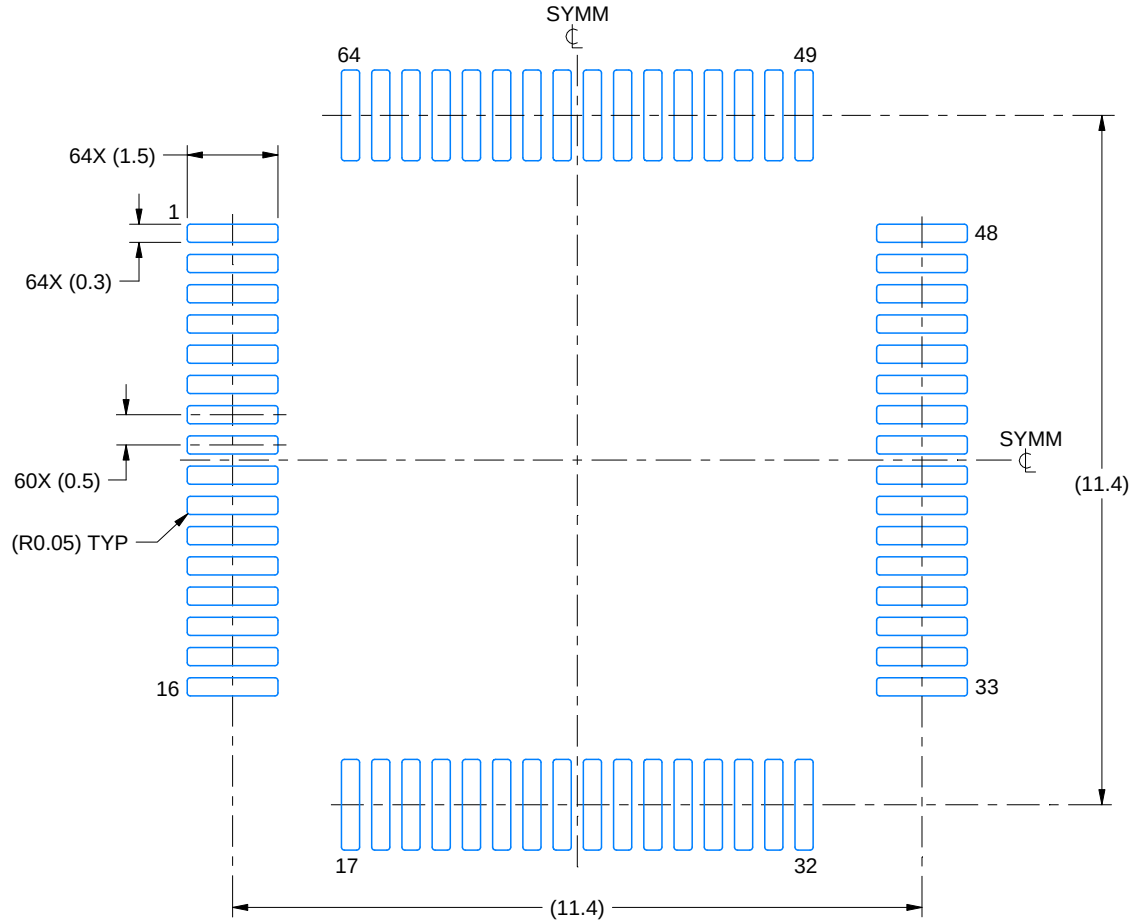

LAND PATTERN EXAMPLE
EXPOSED METAL SHOWN
SCALE:8X

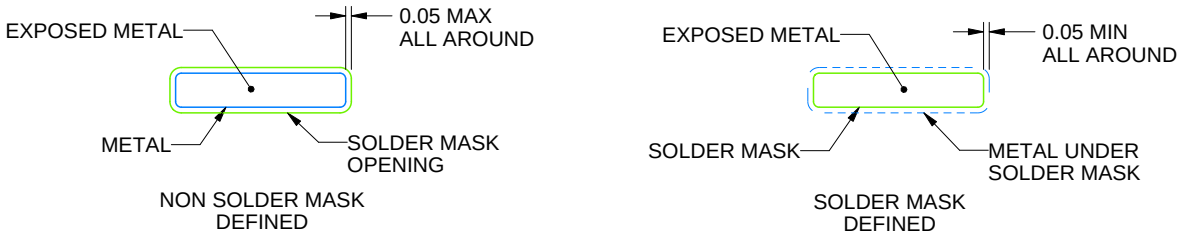

SOLDER MASK DETAILS

4215162/A 03/2017

NOTES: (continued)

5. Publication IPC-7351 may have alternate designs.
6. Solder mask tolerances between and around signal pads can vary based on board fabrication site.
7. For more information, see Texas Instruments literature number SLMA004 (www.ti.com/lit/slma004).

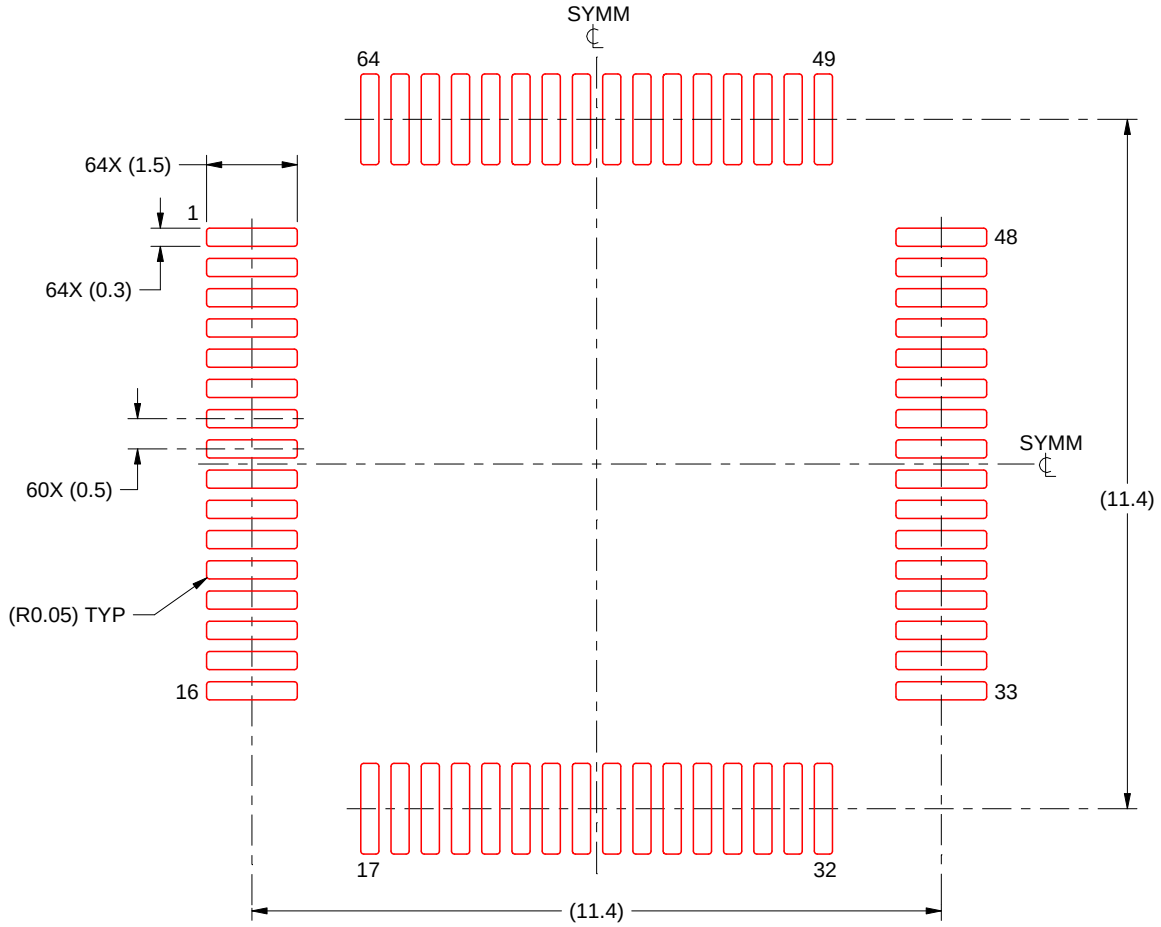

SOLDER PASTE EXAMPLE
BASED ON 0.125 mm THICK STENCIL
SCALE:8X

4215162/A 03/2017

NOTES: (continued)

8. Laser cutting apertures with trapezoidal walls and rounded corners may offer better paste release. IPC-7525 may have alternate design recommendations.
9. Board assembly site may have different recommendations for stencil design.

IMPORTANT NOTICE AND DISCLAIMER

TI PROVIDES TECHNICAL AND RELIABILITY DATA (INCLUDING DATASHEETS), DESIGN RESOURCES (INCLUDING REFERENCE DESIGNS), APPLICATION OR OTHER DESIGN ADVICE, WEB TOOLS, SAFETY INFORMATION, AND OTHER RESOURCES “AS IS” AND WITH ALL FAULTS, AND DISCLAIMS ALL WARRANTIES, EXPRESS AND IMPLIED, INCLUDING WITHOUT LIMITATION ANY IMPLIED WARRANTIES OF MERCHANTABILITY, FITNESS FOR A PARTICULAR PURPOSE OR NON-INFRINGEMENT OF THIRD PARTY INTELLECTUAL PROPERTY RIGHTS.

These resources are intended for skilled developers designing with TI products. You are solely responsible for (1) selecting the appropriate TI products for your application, (2) designing, validating and testing your application, and (3) ensuring your application meets applicable standards, and any other safety, security, regulatory or other requirements.

These resources are subject to change without notice. TI grants you permission to use these resources only for development of an application that uses the TI products described in the resource. Other reproduction and display of these resources is prohibited. No license is granted to any other TI intellectual property right or to any third party intellectual property right. TI disclaims responsibility for, and you fully indemnify TI and its representatives against any claims, damages, costs, losses, and liabilities arising out of your use of these resources.

TI’s products are provided subject to TI’s Terms of Sale, TI’s General Quality Guidelines, or other applicable terms available either on ti.com or provided in conjunction with such TI products. TI’s provision of these resources does not expand or otherwise alter TI’s applicable warranties or warranty disclaimers for TI products. Unless TI explicitly designates a product as custom or customer-specified, TI products are standard, catalog, general purpose devices.

TI objects to and rejects any additional or different terms you may propose.

Copyright © 2026, Texas Instruments Incorporated

Last updated 10/2025