MIXED SIGNAL MICROCONTROLLER

FEATURES

- **Low Supply-Voltage Range: 1.8 V to 3.6 V**
- **Ultralow Power Consumption**
  - **Active Mode: 220 µA at 1 MHz, 2.2 V**
  - **Standby Mode: 0.5 µA**
  - **Off Mode (RAM Retention): 0.1 µA**
- **Five Power-Saving Modes**
- **Ultrafast Wake-Up From Standby Mode in Less Than 1 µs**
- **16-Bit RISC Architecture, 62.5-ns Instruction Cycle Time**
- **Basic Clock Module Configurations**
  - **Internal Frequencies up to 16 MHz With One Calibrated Frequency**
  - **Internal Very Low Power Low-Frequency (LF) Oscillator**
  - **32-kHz Crystal**
  - **External Digital Clock Source**
- **16-Bit Timer_A With Two Capture/Compare Registers**
- **Brownout Detector**
- **On-Chip Comparator for Analog Signal Compare Function or Slope A/D (See Table 1)**
- **Serial Onboard Programming, No External Programming Voltage Needed, Programmable Code Protection by Security Fuse**
- **On-Chip Emulation Logic With Spy-Bi-Wire Interface**
- **For Family Members Details, See Table 1**
- **Available in a 14-Pin Plastic Small-Outline Thin Package (TSSOP) (PW), 14-Pin Plastic Dual Inline Package (PDIP) (N), and 16-Pin QFN (RSA)**
- **For Complete Module Descriptions, See the *MSP430x2xx Family User's Guide* (SLAU144)**

DESCRIPTION

The Texas Instruments MSP430™ family of ultralow-power microcontrollers consists of several devices featuring different sets of peripherals targeted for various applications. The architecture, combined with five low-power modes, is optimized to achieve extended battery life in portable measurement applications. The device features a powerful 16-bit RISC CPU, 16-bit registers, and constant generators that contribute to maximum code efficiency. The digitally controlled oscillator (DCO) allows wake-up from low-power modes to active mode in less than 1 µs.

The MSP430G2x01 and MSP430G2x11 series is an ultralow-power mixed signal microcontroller with a built-in 16-bit timer and ten I/O pins. The MSP430G2x11 family members have a versatile analog comparator. For configuration details see Table 1.

Typical applications include low-cost sensor systems that capture analog signals, convert them to digital values, and then process the data for display or for transmission to a host system.

Please be aware that an important notice concerning availability, standard warranty, and use in critical applications of Texas Instruments semiconductor products and disclaimers thereto appears at the end of this data sheet.

MSP430 is a trademark of Texas Instruments.

PRODUCTION DATA information is current as of publication date. Products conform to specifications per the terms of the Texas Instruments standard warranty. Production processing does not necessarily include testing of all parameters.

Copyright © 2010–2013, Texas Instruments Incorporated

Table 1. Available Options (1)

Device	BSL	EEM	Flash (KB)	RAM (B)	Timer_A	Comp_A+ Channel	Clock	I/O	Package Type (2)
MSP430G2211IRSA16 MSP430G2211IPW14 MSP430G2211IN14	-	1	2	128	1x TA2	8	LF, DCO, VLO	10	16-QFN 14-TSSOP 14-PDIP
MSP430G2201IRSA16 MSP430G2201IPW14 MSP430G2201IN14	-	1	2	128	1x TA2	-	LF, DCO, VLO	10	16-QFN 14-TSSOP 14-PDIP
MSP430G2111IRSA16 MSP430G2111IPW14 MSP430G2111IN14	-	1	1	128	1x TA2	8	LF, DCO, VLO	10	16-QFN 14-TSSOP 14-PDIP
MSP430G2101IRSA16 MSP430G2101IPW14 MSP430G2101IN14	-	1	1	128	1x TA2	-	LF, DCO, VLO	10	16-QFN 14-TSSOP 14-PDIP
MSP430G2001IRSA16 MSP430G2001IPW14 MSP430G2001IN14	-	1	0.5	128	1x TA2	-	LF, DCO, VLO	10	16-QFN 14-TSSOP 14-PDIP

(1) For the most current package and ordering information, see the Package Option Addendum at the end of this document, or see the TI web site at www.ti.com.
(2) Package drawings, thermal data, and symbolization are available at www.ti.com/packaging.

Copyright © 2010–2013, Texas Instruments Incorporated

Device Pinout, MSP430G2x01

N or PW PACKAGE
(TOP VIEW)

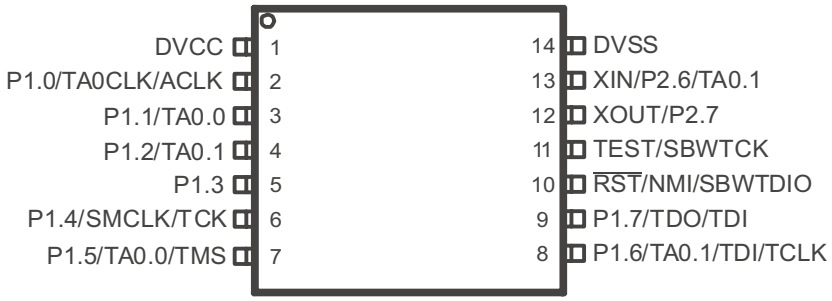

NOTE: See port schematics in Application Information for detailed I/O information.

RSA PACKAGE
(TOP VIEW)

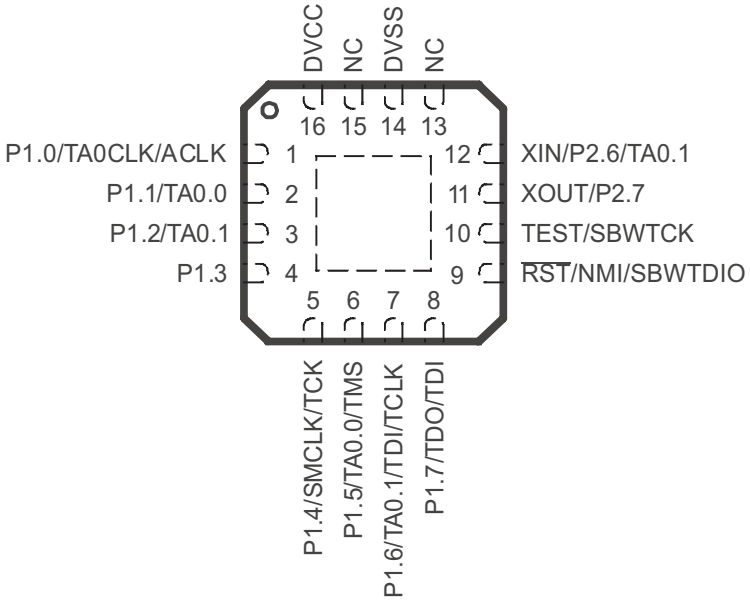

NOTE: See port schematics in Application Information for detailed I/O information.

Device Pinout, MSP430G2x11

N or PW PACKAGE
(TOP VIEW)

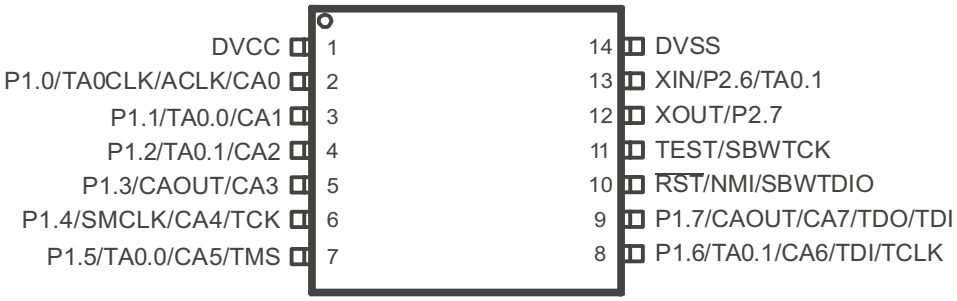

NOTE: See port schematics in Application Information for detailed I/O information.

RSA PACKAGE
(TOP VIEW)

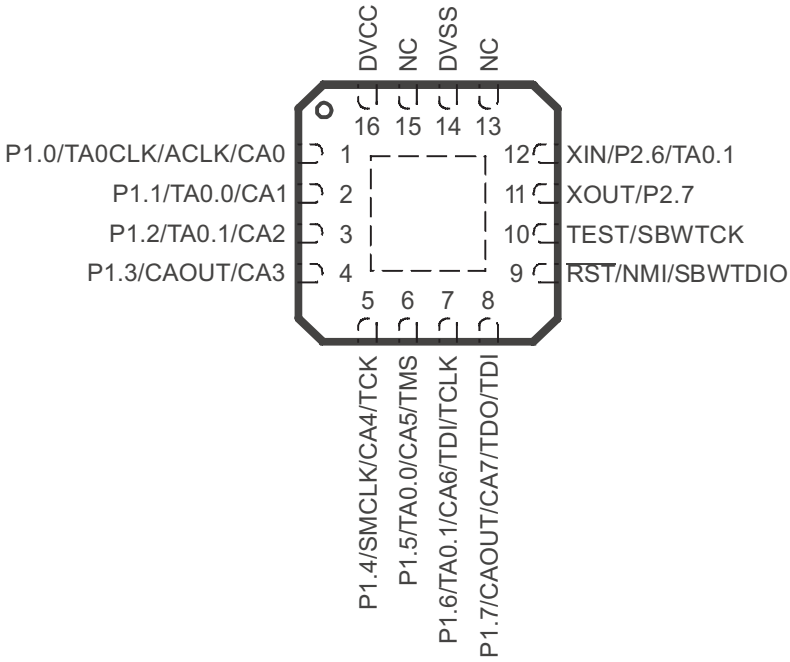

NOTE: See port schematics in Application Information for detailed I/O information.

Copyright © 2010–2013, Texas Instruments Incorporated

Functional Block Diagram, MSP430G2x11

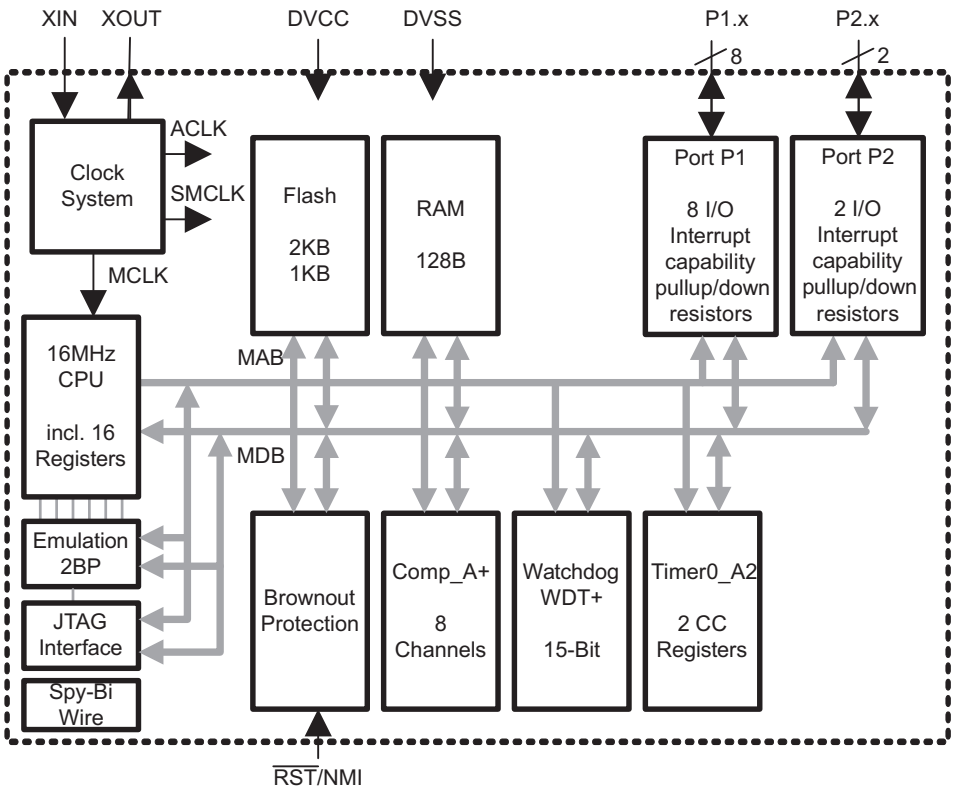

Functional Block Diagram, MSP430G2x01

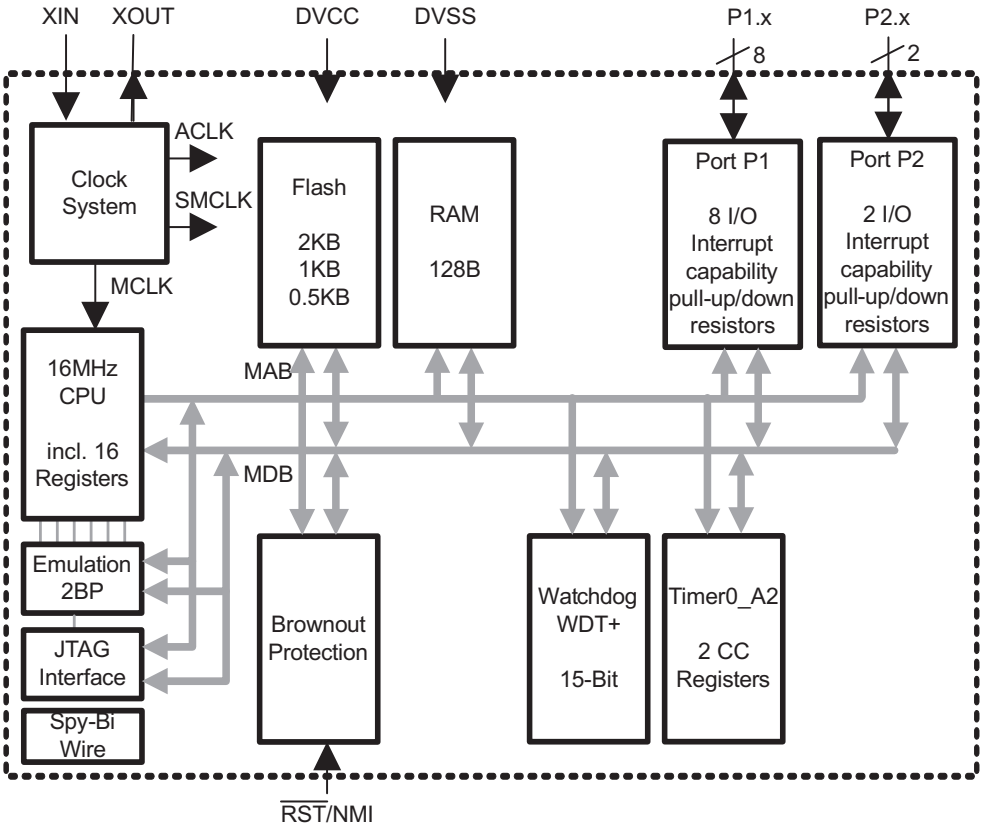

Table 2. Terminal Functions

TERMINAL			I/O	DESCRIPTION
NAME	NO.			
	14 N, PW	16 RSA		
P1.0/ TA0CLK/ ACLK/ CA0	2	1	I/O	General-purpose digital I/O pin Timer0_A, clock signal TACLK input ACLK signal output Comparator_A+, CA0 input(1)
P1.1/ TA0.0/ CA1	3	2	I/O	General-purpose digital I/O pin Timer0_A, capture: CCI0A input, compare: Out0 output Comparator_A+, CA1 input(1)
P1.2/ TA0.1/ CA2	4	3	I/O	General-purpose digital I/O pin Timer0_A, capture: CCI1A input, compare: Out1 output Comparator_A+, CA2 input(1)
P1.3/ CA3/ CAOUT	5	4	I/O	General-purpose digital I/O pin Comparator_A+, CA3 input(1) Comparator_A+, output(1)
P1.4/ SMCLK/ CA4/ TCK	6	5	I/O	General-purpose digital I/O pin SMCLK signal output Comparator_A+, CA4 input(1) JTAG test clock, input terminal for device programming and test
P1.5/ TA0.0/ CA5/ TMS	7	6	I/O	General-purpose digital I/O pin Timer0_A, compare: Out0 output Comparator_A+, CA5 input(1) JTAG test mode select, input terminal for device programming and test
P1.6/ TA0.1/ CA6/ TDI/TCLK	8	7	I/O	General-purpose digital I/O pin Timer0_A, compare: Out1 output Comparator_A+, CA6 input(1) JTAG test data input or test clock input during programming and test
P1.7/ CA7/ CAOUT/ TDO/TDI(2)	9	8	I/O	General-purpose digital I/O pin CA7 input(1) Comparator_A+, output(1) JTAG test data output terminal or test data input during programming and test
XIN/ P2.6/ TA0.1	13	12	I/O	Input terminal of crystal oscillator General-purpose digital I/O pin Timer0_A, compare: Out1 output
XOUT/ P2.7	12	11	I/O	Output terminal of crystal oscillator(3) General-purpose digital I/O pin
$\overline{\text{RST}}$/ NMI/ SBWTDIO	10	9	I	Reset Nonmaskable interrupt input Spy-Bi-Wire test data input/output during programming and test
TEST/ SBWTCK	11	10	I	Selects test mode for JTAG pins on Port 1. The device protection fuse is connected to TEST. Spy-Bi-Wire test clock input during programming and test
DVCC	1	16	NA	Supply voltage
DVSS	14	14	NA	Ground reference
NC	-	13, 15	NA	Not connected
QFN Pad	-	Pad	NA	QFN package pad connection to V_{SS} is recommended.

(1) MSP430G2x11 only
(2) TDO or TDI is selected via JTAG instruction.
(3) If XOUT/P2.7 is used as an input, excess current flows until P2SEL.7 is cleared. This is due to the oscillator output driver connection to this pad after reset.

Copyright © 2010–2013, Texas Instruments Incorporated

SHORT-FORM DESCRIPTION

CPU

The MSP430 CPU has a 16-bit RISC architecture that is highly transparent to the application. All operations, other than program-flow instructions, are performed as register operations in conjunction with seven addressing modes for source operand and four addressing modes for destination operand.

The CPU is integrated with 16 registers that provide reduced instruction execution time. The register-to-register operation execution time is one cycle of the CPU clock.

Four of the registers, R0 to R3, are dedicated as program counter, stack pointer, status register, and constant generator, respectively. The remaining registers are general-purpose registers.

Peripherals are connected to the CPU using data, address, and control buses, and can be handled with all instructions.

The instruction set consists of the original 51 instructions with three formats and seven address modes and additional instructions for the expanded address range. Each instruction can operate on word and byte data.

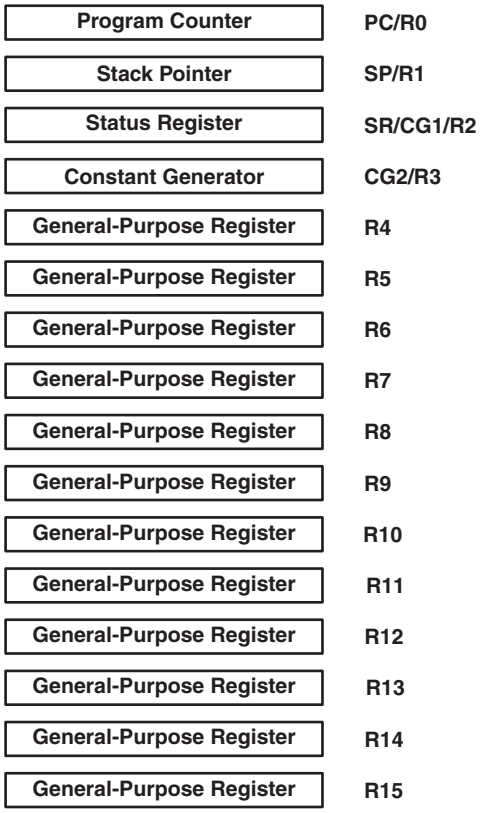

Instruction Set

The instruction set consists of 51 instructions with three formats and seven address modes. Each instruction can operate on word and byte data. Table 3 shows examples of the three types of instruction formats; Table 4 shows the address modes.

Table 3. Instruction Word Formats

INSTRUCTION FORMAT	EXAMPLE	OPERATION
Dual operands, source-destination	ADD R4,R5	R4 + R5 --> R5
Single operands, destination only	CALL R8	PC ->(TOS), R8-> PC
Relative jump, un/conditional	JNE	Jump-on-equal bit = 0

Table 4. Address Mode Descriptions(1)

ADDRESS MODE	S	D	SYNTAX	EXAMPLE	OPERATION
Register	✓	✓	MOV Rs,Rd	MOV R10,R11	R10 - -> R11
Indexed	✓	✓	MOV X(Rn),Y(Rm)	MOV 2(R5),6(R6)	M(2+R5) - -> M(6+R6)
Symbolic (PC relative)	✓	✓	MOV EDE,TONI		M(EDE) - -> M(TONI)
Absolute	✓	✓	MOV &MEM,&TCDAT		M(MEM) - -> M(TCDAT)
Indirect	✓		MOV @Rn,Y(Rm)	MOV @R10,Tab(R6)	M(R10) - -> M(Tab+R6)
Indirect autoincrement	✓		MOV @Rn+,Rm	MOV @R10+,R11	M(R10) - -> R11 R10 + 2- -> R10
Immediate	✓		MOV #X,TONI	MOV #45,TONI	#45 - -> M(TONI)

(1) S = source, D = destination

Copyright © 2010–2013, Texas Instruments Incorporated

Operating Modes

The MSP430 has one active mode and five software selectable low-power modes of operation. An interrupt event can wake up the device from any of the low-power modes, service the request, and restore back to the low-power mode on return from the interrupt program.

The following six operating modes can be configured by software:

- Active mode (AM)
  - All clocks are active
- Low-power mode 0 (LPM0)
  - CPU is disabled
  - ACLK and SMCLK remain active, MCLK is disabled
- Low-power mode 1 (LPM1)
  - CPU is disabled
  - ACLK and SMCLK remain active, MCLK is disabled
  - DCO's dc generator is disabled if DCO not used in active mode
- Low-power mode 2 (LPM2)
  - CPU is disabled
  - MCLK and SMCLK are disabled
  - DCO's dc generator remains enabled
  - ACLK remains active
- Low-power mode 3 (LPM3)
  - CPU is disabled
  - MCLK and SMCLK are disabled
  - DCO's dc generator is disabled
  - ACLK remains active
- Low-power mode 4 (LPM4)
  - CPU is disabled
  - ACLK is disabled
  - MCLK and SMCLK are disabled
  - DCO's dc generator is disabled
  - Crystal oscillator is stopped

Copyright © 2010–2013, Texas Instruments Incorporated

Interrupt Vector Addresses

The interrupt vectors and the power-up starting address are located in the address range 0FFFFh to 0FFC0h. The vector contains the 16-bit address of the appropriate interrupt handler instruction sequence.

If the reset vector (located at address 0FFFEh) contains 0FFFFh (for example, flash is not programmed) the CPU goes into LPM4 immediately after power-up.

Table 5. Interrupt Sources, Flags, and Vectors

INTERRUPT SOURCE	INTERRUPT FLAG	SYSTEM INTERRUPT	WORD ADDRESS	PRIORITY
Power-Up External Reset Watchdog Timer+ Flash key violation PC out-of-range (1)	PORIFG RSTIFG WDTIFG KEYV (2)	Reset	0FFFEh	31, highest
NMI Oscillator fault Flash memory access violation	NMIIFG OFIFG ACCVIFG (2) (3)	(non)-maskable (non)-maskable (non)-maskable	0FFFCh	30
			0FFFAh	29
			0FFF8h	28
Comparator_A+	CAIFG (4) (5)		0FFF6h	27
Watchdog Timer+	WDTIFG	maskable	0FFF4h	26
Timer_A2	TACCR0 CCIFG (4)	maskable	0FFF2h	25
Timer_A2	TACCR1 CCIFG, TAIFG (2) (4)	maskable	0FFF0h	24
			0FFEEh	23
			0FFECh	22
			0FFEAh	21
			0FFE8h	20
I/O Port P2 (two flags)	P2IFG.6 to P2IFG.7 (2) (4)	maskable	0FFE6h	19
I/O Port P1 (eight flags)	P1IFG.0 to P1IFG.7 (2) (4)	maskable	0FFE4h	18
			0FFE2h	17
			0FFE0h	16
See (6)			0FFDEh to 0FFC0h	15 to 0, lowest

(1) A reset is generated if the CPU tries to fetch instructions from within the module register memory address range (0h to 01FFh) or from within unused address ranges.
(2) Multiple source flags
(3) (non)-maskable: the individual interrupt-enable bit can disable an interrupt event, but the general interrupt enable cannot.
(4) Interrupt flags are located in the module.
(5) Devices with Comparator_A+ only
(6) The interrupt vectors at addresses 0FFDEh to 0FFC0h are not used in this device and can be used for regular program code if necessary.

Copyright © 2010–2013, Texas Instruments Incorporated

Special Function Registers (SFRs)

Most interrupt and module enable bits are collected into the lowest address space. Special function register bits not allocated to a functional purpose are not physically present in the device. Simple software access is provided with this arrangement.

Legend	**rw:**	Bit can be read and written.
	rw-0,1:	Bit can be read and written. It is reset or set by PUC.
	rw-(0,1):	Bit can be read and written. It is reset or set by POR.
		SFR bit is not present in device.

Table 6. Interrupt Enable Register 1 and 2

Address	7	6	5	4	3	2	1	0
00h			**ACCVIE**	**NMIIE**			**OFIE**	**WDTIE**
			rw-0	rw-0			rw-0	rw-0

WDTIE	Watchdog Timer interrupt enable. Inactive if watchdog mode is selected. Active if Watchdog Timer is configured in interval timer mode.
OFIE	Oscillator fault interrupt enable
NMIIE	(Non)maskable interrupt enable
ACCVIE	Flash access violation interrupt enable

Address	7	6	5	4	3	2	1	0
01h								

Table 7. Interrupt Flag Register 1 and 2

Address	7	6	5	4	3	2	1	0
02h				**NMIIFG**	**RSTIFG**	**PORIFG**	**OFIFG**	**WDTIFG**
				rw-0	rw-(0)	rw-(1)	rw-1	rw-(0)

WDTIFG	Set on watchdog timer overflow (in watchdog mode) or security key violation. Reset on V_{CC} power-on or a reset condition at the $\overline{RST}$/NMI pin in reset mode.
OFIFG	Flag set on oscillator fault.
PORIFG	Power-on reset interrupt flag. Set on V_{CC} power-up.
RSTIFG	External reset interrupt flag. Set on a reset condition at $\overline{RST}$/NMI pin in reset mode. Reset on V_{CC} power-up.
NMIIFG	Set via $\overline{RST}$/NMI pin

Address	7	6	5	4	3	2	1	0
03h								

Copyright © 2010–2013, Texas Instruments Incorporated

Memory Organization

Table 8. Memory Organization

		MSP430G2001 MSP430G2011	MSP430G2101 MSP430G2111	MSP430G2201 MSP430G2211
Memory	Size	512B	1kB	2kB
Main: interrupt vector	Flash	0xFFFF to 0xFFC0	0xFFFF to 0xFFC0	0xFFFF to 0xFFC0
Main: code memory	Flash	0xFFFF to 0xFE00	0xFFFF to 0xFC00	0xFFFF to 0xF800
Information memory	Size	256 Byte	256 Byte	256 Byte
	Flash	010FFh to 01000h	010FFh to 01000h	010FFh to 01000h
RAM	Size	128B	128B	128B
		027Fh to 0200h	027Fh to 0200h	027Fh to 0200h
Peripherals	16-bit	01FFh to 0100h	01FFh to 0100h	01FFh to 0100h
	8-bit	0FFh to 010h	0FFh to 010h	0FFh to 010h
	8-bit SFR	0Fh to 00h	0Fh to 00h	0Fh to 00h

Flash Memory

The flash memory can be programmed via the Spy-Bi-Wire or JTAG port or in-system by the CPU. The CPU can perform single-byte and single-word writes to the flash memory. Features of the flash memory include:

- Flash memory has n segments of main memory and four segments of information memory (A to D) of 64 bytes each. Each segment in main memory is 512 bytes in size.
- Segments 0 to n may be erased in one step, or each segment may be individually erased.
- Segments A to D can be erased individually or as a group with segments 0 to n. Segments A to D are also called *information memory*.
- Segment A contains calibration data. After reset segment A is protected against programming and erasing. It can be unlocked but care should be taken not to erase this segment if the device-specific calibration data is required.

Copyright © 2010–2013, Texas Instruments Incorporated

Peripherals

Peripherals are connected to the CPU through data, address, and control buses and can be handled using all instructions. For complete module descriptions, see the *MSP430x2xx Family User's Guide* (SLAU144).

Oscillator and System Clock

The clock system is supported by the basic clock module that includes support for a 32768-Hz watch crystal oscillator, an internal very-low-power low-frequency oscillator and an internal digitally controlled oscillator (DCO). The basic clock module is designed to meet the requirements of both low system cost and low power consumption. The internal DCO provides a fast turn-on clock source and stabilizes in less than 1 µs. The basic clock module provides the following clock signals:

- Auxiliary clock (ACLK), sourced either from a 32768-Hz watch crystal or the internal LF oscillator.
- Main clock (MCLK), the system clock used by the CPU.
- Sub-Main clock (SMCLK), the sub-system clock used by the peripheral modules.

Table 9. DCO Calibration Data (Provided From Factory In Flash Information Memory Segment A)

DCO FREQUENCY	CALIBRATION REGISTER	SIZE	ADDRESS
1 MHz	CALBC1_1MHZ	byte	010FFh
	CALDCO_1MHZ	byte	010FEh

Brownout

The brownout circuit is implemented to provide the proper internal reset signal to the device during power on and power off.

Digital I/O

There is one 8-bit I/O port implemented—port P1—and two bits of I/O port P2:

- All individual I/O bits are independently programmable.
- Any combination of input, output, and interrupt condition is possible.
- Edge-selectable interrupt input capability for all the eight bits of port P1 and the two bits of port P2.
- Read/write access to port-control registers is supported by all instructions.
- Each I/O has an individually programmable pullup/pulldown resistor.

Watchdog Timer (WDT+)

The primary function of the watchdog timer (WDT+) module is to perform a controlled system restart after a software problem occurs. If the selected time interval expires, a system reset is generated. If the watchdog function is not needed in an application, the module can be disabled or configured as an interval timer and can generate interrupts at selected time intervals.

Copyright © 2010–2013, Texas Instruments Incorporated

Timer_A2

Timer_A2 is a 16-bit timer/counter with two capture/compare registers. Timer_A2 can support multiple capture/compares, PWM outputs, and interval timing. Timer_A2 also has extensive interrupt capabilities. Interrupts may be generated from the counter on overflow conditions and from each of the capture/compare registers.

Table 10. Timer_A2 Signal Connections - Devices With No Analog

INPUT PIN NUMBER		DEVICE INPUT SIGNAL	MODULE INPUT NAME	MODULE BLOCK	MODULE OUTPUT SIGNAL	OUTPUT PIN NUMBER	
PW, N	RSA					PW, N	RSA
2 - P1.0	1 - P1.0	TACLK	TACLK	Timer	NA		
		ACLK	ACLK				
		SMCLK	SMCLK				
2 - P1.0	1 - P1.0	TACLK	INCLK				
3 - P1.1	2 - P1.1	TA0	CCI0A	CCR0	TA0	3 - P1.1	2 - P1.1
		ACLK (internal)	CCI0B			7 - P1.5	6 - P1.5
		V_{SS}	GND				
		V_{CC}	V_{CC}				
4 - P1.2	3 - P1.2	TA1	CCI1A	CCR1	TA1	4 - P1.2	3 - P1.2
		TA1	CCI1B			8 - P1.6	7 - P1.6
		V_{SS}	GND			13 - P2.6	12 - P2.6
		V_{CC}	V_{CC}				

Table 11. Timer_A2 Signal Connections - Devices With Comparator_A+

INPUT PIN NUMBER		DEVICE INPUT SIGNAL	MODULE INPUT NAME	MODULE BLOCK	MODULE OUTPUT SIGNAL	OUTPUT PIN NUMBER	
PW, N	RSA					PW, N	RSA
2 - P1.0	1 - P1.0	TACLK	TACLK	Timer	NA		
		ACLK	ACLK				
		SMCLK	SMCLK				
2 - P1.0	1 - P1.0	TACLK	INCLK				
3 - P1.1	2 - P1.1	TA0	CCI0A	CCR0	TA0	3 - P1.1	2 - P1.1
		ACLK (internal)	CCI0B			7 - P1.5	6 - P1.5
		V_{SS}	GND				
		V_{CC}	V_{CC}				
4 - P1.2	3 - P1.2	TA1	CCI1A	CCR1	TA1	4 - P1.2	3 - P1.2
		CAOUT (internal)	CCI1B			8 - P1.6	7 - P1.6
		V_{SS}	GND			13 - P2.6	12 - P2.6
		V_{CC}	V_{CC}				

Comparator_A+ (MSP430G2x11 Only)

The primary function of the comparator_A+module is to support precision slope analog-to-digital conversions, battery-voltage supervision, and monitoring of external analog signals.

Copyright © 2010–2013, Texas Instruments Incorporated

Peripheral File Map

Table 12. Peripherals With Word Access

MODULE	REGISTER DESCRIPTION	REGISTER NAME	OFFSET
Timer_A	Capture/compare register	TACCR1	0174h
	Capture/compare register	TACCR0	0172h
	Timer_A register	TAR	0170h
	Capture/compare control	TACCTL1	0164h
	Capture/compare control	TACCTL0	0162h
	Timer_A control	TACTL	0160h
	Timer_A interrupt vector	TAIV	012Eh
Flash Memory	Flash control 3	FCTL3	012Ch
	Flash control 2	FCTL2	012Ah
	Flash control 1	FCTL1	0128h
Watchdog Timer+	Watchdog/timer control	WDTCTL	0120h

Table 13. Peripherals With Byte Access

MODULE	REGISTER DESCRIPTION	REGISTER NAME	OFFSET
Comparator_A+ (MSP430G2x11 only)	Comparator_A+ port disable	CAPD	05Bh
	Comparator_A+ control 2	CACTL2	05Ah
	Comparator_A+ control 1	CACTL1	059h
Basic Clock System+	Basic clock system control 3	BCSCTL3	053h
	Basic clock system control 2	BCSCTL2	058h
	Basic clock system control 1	BCSCTL1	057h
	DCO clock frequency control	DCOCTL	056h
Port P2	Port P2 resistor enable	P2REN	02Fh
	Port P2 selection	P2SEL	02Eh
	Port P2 interrupt enable	P2IE	02Dh
	Port P2 interrupt edge select	P2IES	02Ch
	Port P2 interrupt flag	P2IFG	02Bh
	Port P2 direction	P2DIR	02Ah
	Port P2 output	P2OUT	029h
	Port P2 input	P2IN	028h
Port P1	Port P1 resistor enable	P1REN	027h
	Port P1 selection	P1SEL	026h
	Port P1 interrupt enable	P1IE	025h
	Port P1 interrupt edge select	P1IES	024h
	Port P1 interrupt flag	P1IFG	023h
	Port P1 direction	P1DIR	022h
	Port P1 output	P1OUT	021h
	Port P1 input	P1IN	020h
Special Function	SFR interrupt flag 2	IFG2	003h
	SFR interrupt flag 1	IFG1	002h
	SFR interrupt enable 2	IE2	001h
	SFR interrupt enable 1	IE1	000h

Copyright © 2010–2013, Texas Instruments Incorporated

Absolute Maximum Ratings[1]

Voltage applied at V_{CC} to V_{SS}		-0.3 V to 4.1 V
Voltage applied to any pin[2]		-0.3 V to V_{CC} + 0.3 V
Diode current at any device pin		±2 mA
Storage temperature range, T_{stg} [3]	Unprogrammed device	-55°C to 150°C
	Programmed device	-55°C to 150°C

(1) Stresses beyond those listed under "absolute maximum ratings" may cause permanent damage to the device. These are stress ratings only, and functional operation of the device at these or any other conditions beyond those indicated under "recommended operating conditions" is not implied. Exposure to absolute-maximum-rated conditions for extended periods may affect device reliability.
(2) All voltages referenced to V_{SS}. The JTAG fuse-blow voltage, V_{FB}, is allowed to exceed the absolute maximum rating. The voltage is applied to the TEST pin when blowing the JTAG fuse.
(3) Higher temperature may be applied during board soldering according to the current JEDEC J-STD-020 specification with peak reflow temperatures not higher than classified on the device label on the shipping boxes or reels.

Recommended Operating Conditions

Typical values are specified at V_{CC} = 3.3 V and T_A = 25°C (unless otherwise noted)

			MIN	NOM	MAX	UNIT
V_{CC}	Supply voltage	During program execution	1.8		3.6	V
		During flash program or erase	2.2		3.6	
V_{SS}	Supply voltage			0		V
T_A	Operating free-air temperature		-40		85	°C
f_{SYSTEM}	Processor frequency (maximum MCLK frequency)[1][2]	V_{CC} = 1.8 V, Duty cycle = 50% ± 10%	dc		6	MHz
		V_{CC} = 2.7 V, Duty cycle = 50% ± 10%	dc		12	
		V_{CC} ≥ 3.3 V, Duty cycle = 50% ± 10%	dc		16	

(1) The MSP430 CPU is clocked directly with MCLK. Both the high and low phase of MCLK must not exceed the pulse duration of the specified maximum frequency.
(2) Modules might have a different maximum input clock specification. See the specification of the respective module in this data sheet.

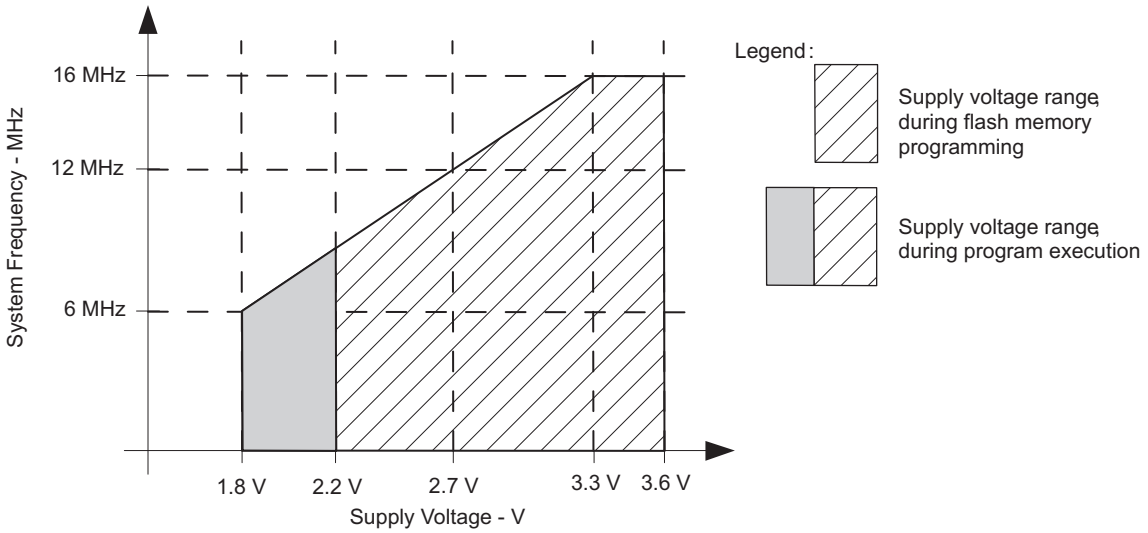

Note: Minimum processor frequency is defined by system clock. Flash program or erase operations require a minimum V_{CC} of 2.2 V.

Figure 1. Safe Operating Area

Electrical Characteristics

Active Mode Supply Current Into V_{CC} Excluding External Current

over recommended ranges of supply voltage and operating free-air temperature (unless otherwise noted)[(1)(2)]

PARAMETER		TEST CONDITIONS	V_{CC}	MIN	TYP	MAX	UNIT
$I_{AM,1MHz}$	Active mode (AM) current (1 MHz)	$f_{DCO} = f_{MCLK} = f_{SMCLK} = 1$ MHz, $f_{ACLK} = 32768$ Hz, Program executes in flash, BCSCTL1 = CALBC1_1MHZ, DCOCTL = CALDCO_1MHZ, CPUOFF = 0, SCG0 = 0, SCG1 = 0, OSCOFF = 0	2.2 V		220		µA
			3 V		300	370	

(1) All inputs are tied to 0 V or to V_{CC}. Outputs do not source or sink any current.
(2) The currents are characterized with a Micro Crystal CC4V-T1A SMD crystal with a load capacitance of 9 pF. The internal and external load capacitance is chosen to closely match the required 9 pF.

Typical Characteristics - Active Mode Supply Current (Into V_{CC})

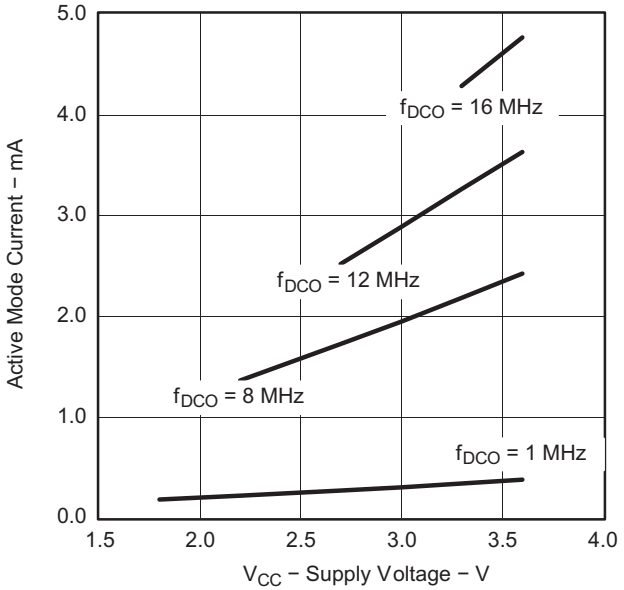

Figure 2. Active Mode Current vs V_{CC}, T_A = 25°C

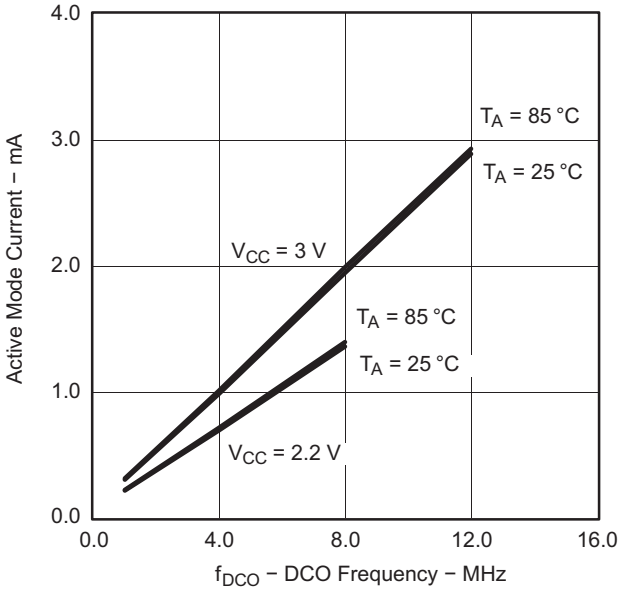

Figure 3. Active Mode Current vs DCO Frequency

Copyright © 2010–2013, Texas Instruments Incorporated

Low-Power Mode Supply Currents (Into V_{CC}) Excluding External Current

over recommended ranges of supply voltage and operating free-air temperature (unless otherwise noted)(1) (2)

PARAMETER		TEST CONDITIONS	T_A	V_{CC}	MIN	TYP	MAX	UNIT
$I_{LPM0,1MHz}$	Low-power mode 0 (LPM0) current(3)	f_{MCLK} = 0 MHz, f_{SMCLK} = f_{DCO} = 1 MHz, f_{ACLK} = 32768 Hz, BCSCTL1 = CALBC1_1MHZ, DCOCTL = CALDCO_1MHZ, CPUOFF = 1, SCG0 = 0, SCG1 = 0, OSCOFF = 0	25°C	2.2 V		65		µA
I_{LPM2}	Low-power mode 2 (LPM2) current(4)	f_{MCLK} = f_{SMCLK} = 0 MHz, f_{DCO} = 1 MHz, f_{ACLK} = 32768 Hz, BCSCTL1 = CALBC1_1MHZ, DCOCTL = CALDCO_1MHZ, CPUOFF = 1, SCG0 = 0, SCG1 = 1, OSCOFF = 0	25°C	2.2 V		22		µA
$I_{LPM3,LFXT1}$	Low-power mode 3 (LPM3) current(4)	f_{DCO} = f_{MCLK} = f_{SMCLK} = 0 MHz, f_{ACLK} = 32768 Hz, CPUOFF = 1, SCG0 = 1, SCG1 = 1, OSCOFF = 0	25°C	2.2 V		0.7	1.5	µA
$I_{LPM3,VLO}$	Low-power mode 3 current, (LPM3)(4)	f_{DCO} = f_{MCLK} = f_{SMCLK} = 0 MHz, f_{ACLK} from internal LF oscillator (VLO), CPUOFF = 1, SCG0 = 1, SCG1 = 1, OSCOFF = 0	25°C	2.2 V		0.5	0.7	µA
I_{LPM4}	Low-power mode 4 (LPM4) current(5)	f_{DCO} = f_{MCLK} = f_{SMCLK} = 0 MHz, f_{ACLK} = 0 Hz, CPUOFF = 1, SCG0 = 1, SCG1 = 1, OSCOFF = 1	25°C	2.2 V		0.1	0.5	µA
			85°C			0.8	1.5	

(1) All inputs are tied to 0 V or to V_{CC}. Outputs do not source or sink any current.
(2) The currents are characterized with a Micro Crystal CC4V-T1A SMD crystal with a load capacitance of 9 pF.
(3) Current for brownout and WDT clocked by SMCLK included.
(4) Current for brownout and WDT clocked by ACLK included.
(5) Current for brownout included.

Typical Characteristics Low-Power Mode Supply Currents

over recommended ranges of supply voltage and operating free-air temperature (unless otherwise noted)

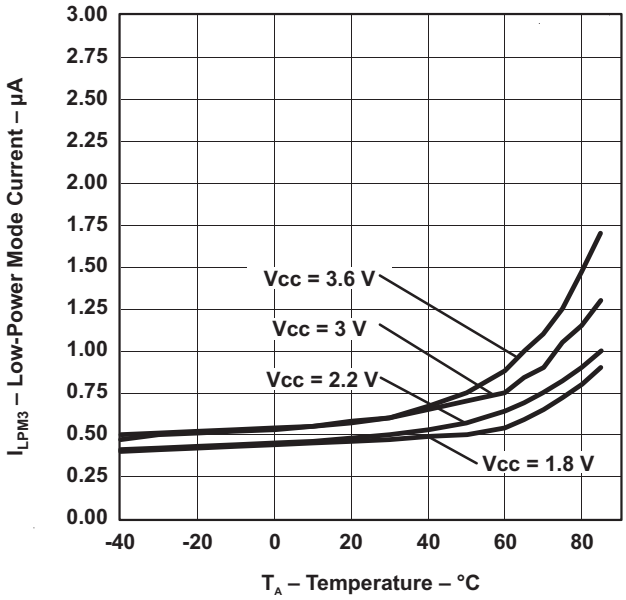

Figure 4. LPM3 Current vs Temperature

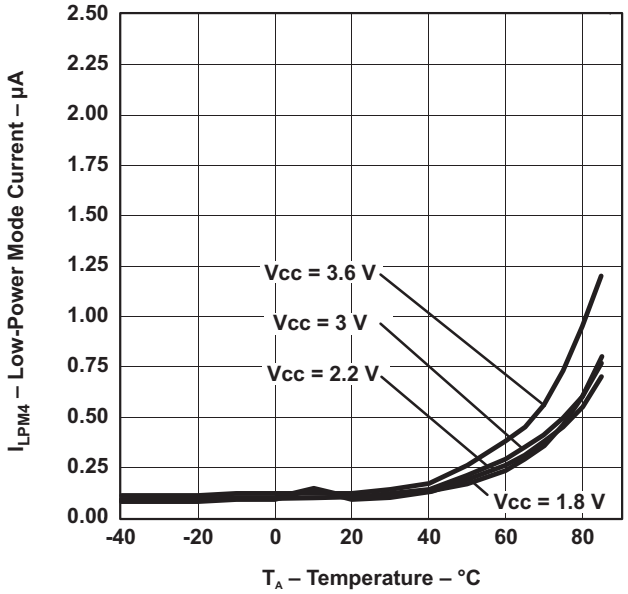

Figure 5. LPM4 Current vs Temperature

Schmitt-Trigger Inputs - Ports Px

over recommended ranges of supply voltage and operating free-air temperature (unless otherwise noted)

PARAMETER		TEST CONDITIONS	V_{CC}	MIN	TYP	MAX	UNIT
V_{IT+}	Positive-going input threshold voltage			0.45 V_{CC}		0.75 V_{CC}	V
			3 V	1.35		2.25	
V_{IT-}	Negative-going input threshold voltage			0.25 V_{CC}		0.55 V_{CC}	V
			3 V	0.75		1.65	
V_{hys}	Input voltage hysteresis (V_{IT+} - V_{IT-})		3 V	0.3		1	V
R_{Pull}	Pullup/pulldown resistor	For pullup: $V_{IN} = V_{SS}$ For pulldown: $V_{IN} = V_{CC}$	3 V	20	35	50	kΩ
C_I	Input capacitance	$V_{IN} = V_{SS}$ or V_{CC}			5		pF

Leakage Current - Ports Px

over recommended ranges of supply voltage and operating free-air temperature (unless otherwise noted)

PARAMETER		TEST CONDITIONS	V_{CC}	MIN	MAX	UNIT
$I_{lkg(Px.y)}$	High-impedance leakage current	(1) (2)	3 V		±50	nA

(1) The leakage current is measured with V_{SS} or V_{CC} applied to the corresponding pin(s), unless otherwise noted.
(2) The leakage of the digital port pins is measured individually. The port pin is selected for input and the pullup/pulldown resistor is disabled.

Outputs - Ports Px

over recommended ranges of supply voltage and operating free-air temperature (unless otherwise noted)

PARAMETER		TEST CONDITIONS	V_{CC}	MIN	TYP	MAX	UNIT
V_{OH}	High-level output voltage	$I_{(OHmax)}$ = -6 mA(1)	3 V		V_{CC} - 0.3		V
V_{OL}	Low-level output voltage	$I_{(OLmax)}$ = 6 mA(1)	3 V		V_{SS} + 0.3		V

(1) The maximum total current, $I_{(OHmax)}$ and $I_{(OLmax)}$, for all outputs combined should not exceed ±48 mA to hold the maximum voltage drop specified.

Output Frequency - Ports Px

over recommended ranges of supply voltage and operating free-air temperature (unless otherwise noted)

PARAMETER		TEST CONDITIONS	V_{CC}	MIN	TYP	MAX	UNIT
$f_{Px.y}$	Port output frequency (with load)	Px.y, C_L = 20 pF, R_L = 1 kΩ(1) (2)	3 V		12		MHz
f_{Port_CLK}	Clock output frequency	Px.y, C_L = 20 pF(2)	3 V		16		MHz

(1) A resistive divider with 2 × 0.5 kΩ between V_{CC} and V_{SS} is used as load. The output is connected to the center tap of the divider.
(2) The output voltage reaches at least 10% and 90% V_{CC} at the specified toggle frequency.

Copyright © 2010–2013, Texas Instruments Incorporated

Typical Characteristics - Outputs

over recommended ranges of supply voltage and operating free-air temperature (unless otherwise noted)

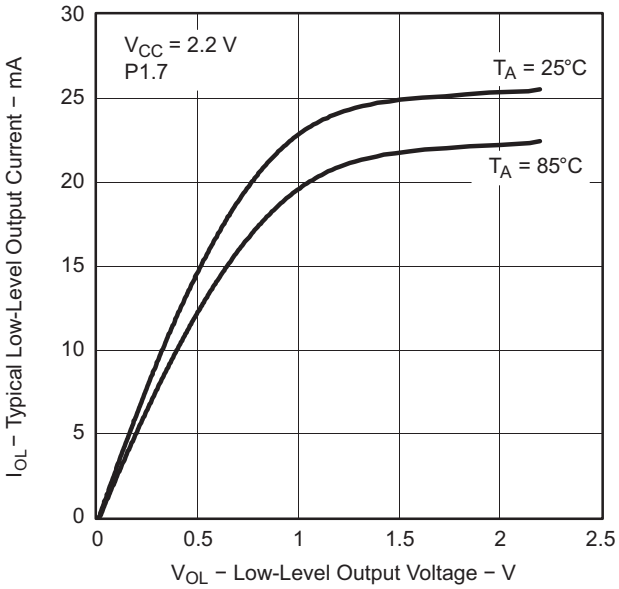

Figure 6.

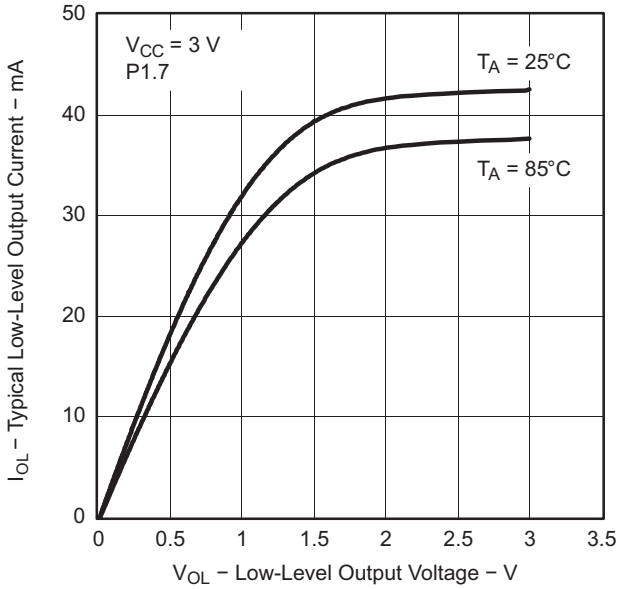

Figure 7.

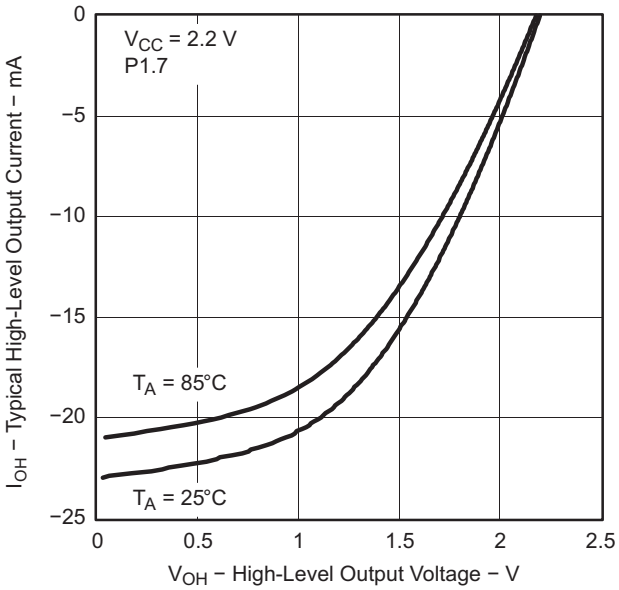

Figure 8.

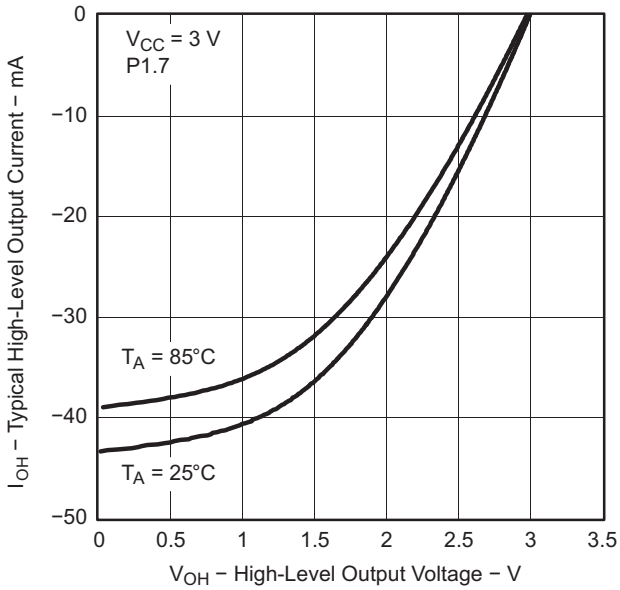

Figure 9.

Copyright © 2010–2013, Texas Instruments Incorporated

POR, BOR(1)(2)

over recommended ranges of supply voltage and operating free-air temperature (unless otherwise noted)

PARAMETER		TEST CONDITIONS	V_{CC}	MIN	TYP	MAX	UNIT
$V_{CC(start)}$	See Figure 10	$dV_{CC}/dt \le 3$ V/s			0.7 × $V_{(B_IT-)}$		V
$V_{(B_IT-)}$	See Figure 10 through Figure 12	$dV_{CC}/dt \le 3$ V/s			1.35		V
$V_{hys(B_IT-)}$	See Figure 10	$dV_{CC}/dt \le 3$ V/s			130		mV
$t_{d(BOR)}$	See Figure 10					2000	µs
$t_{(reset)}$	Pulse duration needed at $\overline{RST}$/NMI pin to accepted reset internally		2.2 V, 3 V	2			µs

(1) The current consumption of the brownout module is already included in the I_{CC} current consumption data. The voltage level $V_{(B_IT-)}$ + $V_{hys(B_IT-)}$is ≤ 1.8 V.
(2) During power up, the CPU begins code execution following a period of $t_{d(BOR)}$ after $V_{CC} = V_{(B_IT-)} + V_{hys(B_IT-)}$. The default DCO settings must not be changed until $V_{CC} \ge V_{CC(min)}$, where $V_{CC(min)}$ is the minimum supply voltage for the desired operating frequency.

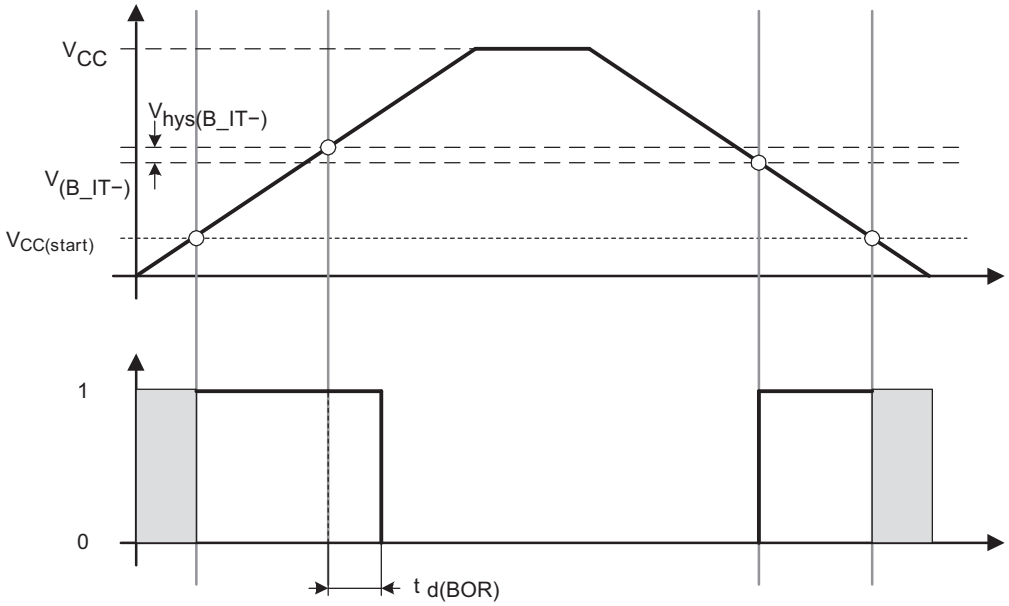

Figure 10. POR and BOR vs Supply Voltage

Copyright © 2010–2013, Texas Instruments Incorporated

Typical Characteristics - POR and BOR

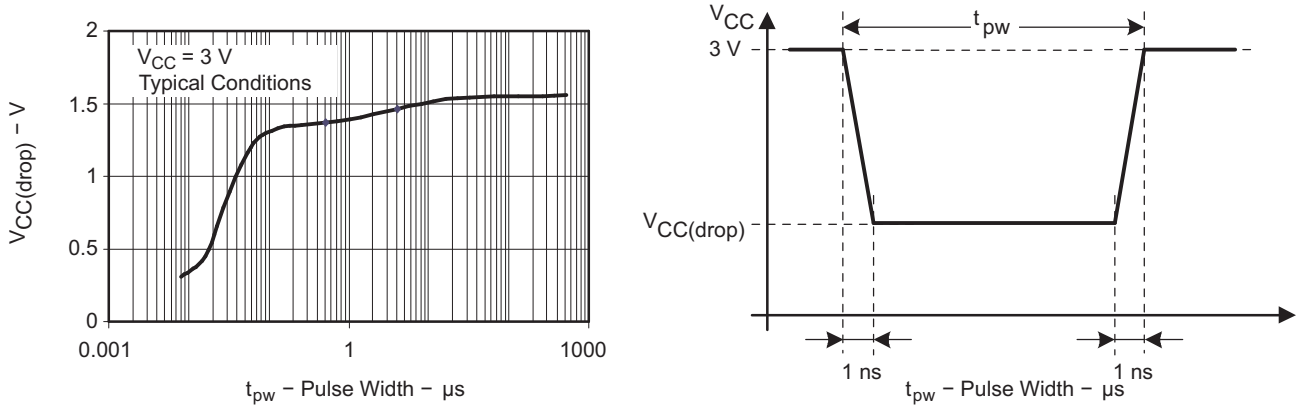

Figure 11. $V_{CC(drop)}$ Level With a Square Voltage Drop to Generate a POR or BOR Signal

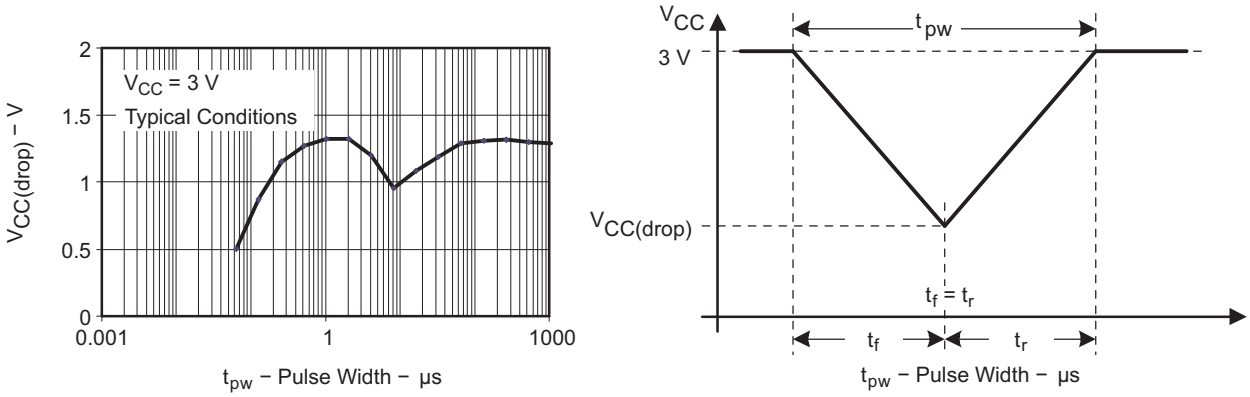

Figure 12. $V_{CC(drop)}$ Level With a Triangle Voltage Drop to Generate a POR or BOR Signal

Main DCO Characteristics

- All ranges selected by RSELx overlap with RSELx + 1: RSELx = 0 overlaps RSELx = 1, ... RSELx = 14 overlaps RSELx = 15.
- DCO control bits DCOx have a step size as defined by parameter S_{DCO}.
- Modulation control bits MODx select how often $f_{DCO(RSEL,DCO+1)}$ is used within the period of 32 DCOCLK cycles. The frequency $f_{DCO(RSEL,DCO)}$ is used for the remaining cycles. The frequency is an average equal to:

$$f_{average} = \frac{32 \times f_{DCO(RSEL,DCO)} \times f_{DCO(RSEL,DCO+1)}}{MOD \times f_{DCO(RSEL,DCO)} + (32 - MOD) \times f_{DCO(RSEL,DCO+1)}}$$

DCO Frequency

over recommended ranges of supply voltage and operating free-air temperature (unless otherwise noted)

PARAMETER		TEST CONDITIONS	V_{CC}	MIN	TYP	MAX	UNIT
V_{CC}	Supply voltage	RSELx < 14		1.8		3.6	V
		RSELx = 14		2.2		3.6	V
		RSELx = 15		3		3.6	V
$f_{DCO(0,0)}$	DCO frequency (0, 0)	RSELx = 0, DCOx = 0, MODx = 0	3 V	0.06		0.14	MHz
$f_{DCO(0,3)}$	DCO frequency (0, 3)	RSELx = 0, DCOx = 3, MODx = 0	3 V		0.12		MHz
$f_{DCO(1,3)}$	DCO frequency (1, 3)	RSELx = 1, DCOx = 3, MODx = 0	3 V		0.15		MHz
$f_{DCO(2,3)}$	DCO frequency (2, 3)	RSELx = 2, DCOx = 3, MODx = 0	3 V		0.21		MHz
$f_{DCO(3,3)}$	DCO frequency (3, 3)	RSELx = 3, DCOx = 3, MODx = 0	3 V		0.3		MHz
$f_{DCO(4,3)}$	DCO frequency (4, 3)	RSELx = 4, DCOx = 3, MODx = 0	3 V		0.41		MHz
$f_{DCO(5,3)}$	DCO frequency (5, 3)	RSELx = 5, DCOx = 3, MODx = 0	3 V		0.58		MHz
$f_{DCO(6,3)}$	DCO frequency (6, 3)	RSELx = 6, DCOx = 3, MODx = 0	3 V		0.8		MHz
$f_{DCO(7,3)}$	DCO frequency (7, 3)	RSELx = 7, DCOx = 3, MODx = 0	3 V	0.8		1.5	MHz
$f_{DCO(8,3)}$	DCO frequency (8, 3)	RSELx = 8, DCOx = 3, MODx = 0	3 V		1.6		MHz
$f_{DCO(9,3)}$	DCO frequency (9, 3)	RSELx = 9, DCOx = 3, MODx = 0	3 V		2.3		MHz
$f_{DCO(10,3)}$	DCO frequency (10, 3)	RSELx = 10, DCOx = 3, MODx = 0	3 V		3.4		MHz
$f_{DCO(11,3)}$	DCO frequency (11, 3)	RSELx = 11, DCOx = 3, MODx = 0	3 V		4.25		MHz
$f_{DCO(12,3)}$	DCO frequency (12, 3)	RSELx = 12, DCOx = 3, MODx = 0	3 V	4.3		7.3	MHz
$f_{DCO(13,3)}$	DCO frequency (13, 3)	RSELx = 13, DCOx = 3, MODx = 0	3 V		7.8		MHz
$f_{DCO(14,3)}$	DCO frequency (14, 3)	RSELx = 14, DCOx = 3, MODx = 0	3 V	8.6		13.9	MHz
$f_{DCO(15,3)}$	DCO frequency (15, 3)	RSELx = 15, DCOx = 3, MODx = 0	3 V		15.25		MHz
$f_{DCO(15,7)}$	DCO frequency (15, 7)	RSELx = 15, DCOx = 7, MODx = 0	3 V		21		MHz
S_{RSEL}	Frequency step between range RSEL and RSEL+1	$S_{RSEL} = f_{DCO(RSEL+1,DCO)}/f_{DCO(RSEL,DCO)}$	3 V		1.35		ratio
S_{DCO}	Frequency step between tap DCO and DCO+1	$S_{DCO} = f_{DCO(RSEL,DCO+1)}/f_{DCO(RSEL,DCO)}$	3 V		1.08		ratio
	Duty cycle	Measured at SMCLK output	3 V		50		%

Copyright © 2010–2013, Texas Instruments Incorporated

Calibrated DCO Frequencies - Tolerance

over recommended ranges of supply voltage and operating free-air temperature (unless otherwise noted)

PARAMETER	TEST CONDITIONS	T_A	V_{CC}	MIN	TYP	MAX	UNIT
1-MHz tolerance over temperature (1)	BCSCTL1= CALBC1_1MHz, DCOCTL = CALDCO_1MHz, calibrated at 30°C and 3 V	0°C to 85°C	3 V	-3	±0.5	+3	%
1-MHz tolerance over V_{CC}	BCSCTL1= CALBC1_1MHz, DCOCTL = CALDCO_1MHz, calibrated at 30°C and 3 V	30°C	1.8 V to 3.6 V	-3	±2	+3	%
1-MHz tolerance overall	BCSCTL1= CALBC1_1MHz, DCOCTL = CALDCO_1MHz, calibrated at 30°C and 3 V	-40°C to 85°C	1.8 V to 3.6 V	-6	±3	+6	%

(1) This is the frequency change from the measured frequency at 30°C over temperature.

Wake-Up From Lower-Power Modes (LPM3 or LPM4) Electrical Characteristics

over recommended ranges of supply voltage and operating free-air temperature (unless otherwise noted)

PARAMETER		TEST CONDITIONS	V_{CC}	MIN	TYP	MAX	UNIT
$t_{DCO,LPM3/4}$	DCO clock wake-up time from LPM3 or LPM4 (1)	BCSCTL1= CALBC1_1MHz, DCOCTL = CALDCO_1MHz	3 V		1.5		µs
$t_{CPU,LPM3/4}$	CPU wake-up time from LPM3 or LPM4 (2)				$1/f_{MCLK}$ + $t_{Clock,LPM3/4}$		

(1) The DCO clock wake-up time is measured from the edge of an external wake-up signal (for example, port interrupt) to the first clock edge observable externally on a clock pin (MCLK or SMCLK).
(2) Parameter applicable only if DCOCLK is used for MCLK.

Typical Characteristics - DCO Clock Wake-Up Time From LPM3 or LPM4

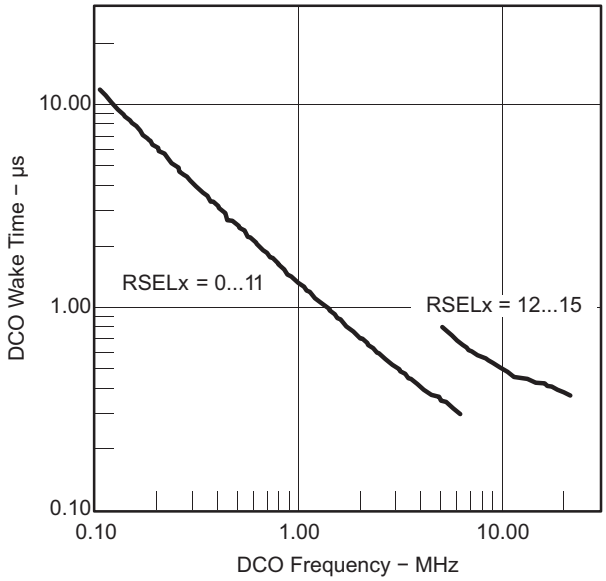

Figure 13. DCO Wake-Up Time From LPM3 vs DCO Frequency

Crystal Oscillator, XT1, Low-Frequency Mode(1)

over recommended ranges of supply voltage and operating free-air temperature (unless otherwise noted)

PARAMETER		TEST CONDITIONS	V_{CC}	MIN	TYP	MAX	UNIT
$f_{LFXT1,LF}$	LFXT1 oscillator crystal frequency, LF mode 0, 1	XTS = 0, LFXT1Sx = 0 or 1	1.8 V to 3.6 V		32768		Hz
$f_{LFXT1,LF,logic}$	LFXT1 oscillator logic level square wave input frequency, LF mode	XTS = 0, XCAPx = 0, LFXT1Sx = 3	1.8 V to 3.6 V	10000	32768	50000	Hz
OA_{LF}	Oscillation allowance for LF crystals	XTS = 0, LFXT1Sx = 0, $f_{LFXT1,LF}$ = 32768 Hz, $C_{L,eff}$ = 6 pF			500		kΩ
		XTS = 0, LFXT1Sx = 0, $f_{LFXT1,LF}$ = 32768 Hz, $C_{L,eff}$ = 12 pF			200		
$C_{L,eff}$	Integrated effective load capacitance, LF mode(2)	XTS = 0, XCAPx = 0			1		pF
		XTS = 0, XCAPx = 1			5.5		
		XTS = 0, XCAPx = 2			8.5		
		XTS = 0, XCAPx = 3			11		
	Duty cycle, LF mode	XTS = 0, Measured at ACLK, $f_{LFXT1,LF}$ = 32768 Hz	2.2 V	30	50	70	%
$f_{Fault,LF}$	Oscillator fault frequency, LF mode(3)	XTS = 0, XCAPx = 0, LFXT1Sx = 3(4)	2.2 V	10		10000	Hz

(1) To improve EMI on the XT1 oscillator, the following guidelines should be observed.
(a) Keep the trace between the device and the crystal as short as possible.
(b) Design a good ground plane around the oscillator pins.
(c) Prevent crosstalk from other clock or data lines into oscillator pins XIN and XOUT.
(d) Avoid running PCB traces underneath or adjacent to the XIN and XOUT pins.
(e) Use assembly materials and praxis to avoid any parasitic load on the oscillator XIN and XOUT pins.
(f) If conformal coating is used, ensure that it does not induce capacitive or resistive leakage between the oscillator pins.
(g) Do not route the XOUT line to the JTAG header to support the serial programming adapter as shown in other documentation. This signal is no longer required for the serial programming adapter.
(2) Includes parasitic bond and package capacitance (approximately 2 pF per pin).
Since the PCB adds additional capacitance, it is recommended to verify the correct load by measuring the ACLK frequency. For a correct setup, the effective load capacitance should always match the specification of the used crystal.
(3) Frequencies below the MIN specification set the fault flag. Frequencies above the MAX specification do not set the fault flag. Frequencies in between might set the flag.
(4) Measured with logic-level input frequency but also applies to operation with crystals.

Internal Very-Low-Power Low-Frequency Oscillator (VLO)

over recommended ranges of supply voltage and operating free-air temperature (unless otherwise noted)

PARAMETER		T_A	V_{CC}	MIN	TYP	MAX	UNIT
f_{VLO}	VLO frequency	-40°C to 85°C	3 V	4	12	20	kHz
df_{VLO}/d_T	VLO frequency temperature drift	-40°C to 85°C	3 V		0.5		%/°C
df_{VLO}/dV_{CC}	VLO frequency supply voltage drift	25°C	1.8 V to 3.6 V		4		%/V

Timer_A

over recommended ranges of supply voltage and operating free-air temperature (unless otherwise noted)

PARAMETER		TEST CONDITIONS	V_{CC}	MIN	TYP	MAX	UNIT
f_{TA}	Timer_A input clock frequency	Internal: SMCLK or ACLK, External: TACLK or INCLK, Duty cycle = 50% ± 10%			f_{SYSTEM}		MHz
$t_{TA,cap}$	Timer_A capture timing	TA0, TA1	3 V	20			ns

Copyright © 2010–2013, Texas Instruments Incorporated

Comparator_A+ (MSP430G2x11 only)

over recommended ranges of supply voltage and operating free-air temperature (unless otherwise noted)

PARAMETER		TEST CONDITIONS	V_{CC}	MIN	TYP	MAX	UNIT
$I_{(DD)}$		CAON = 1, CARSEL = 0, CAREF = 0	3 V		45		µA
$I_{(Refladder/RefDiode)}$		CAON = 1, CARSEL = 0, CAREF = 1, 2, or 3, No load at CA0 and CA1	3 V		45		µA
$V_{(IC)}$	Common-mode input voltage	CAON = 1	3 V	0		V_{CC}-1	V
$V_{(Ref025)}$	$\frac{\text{Voltage @ 0.25 } V_{CC} \text{ node}}{V_{CC}}$	PCA0 = 1, CARSEL = 1, CAREF = 1, No load at CA0 and CA1	3 V		0.24		
$V_{(Ref050)}$	$\frac{\text{Voltage @ 0.5 } V_{CC} \text{ node}}{V_{CC}}$	PCA0 = 1, CARSEL = 1, CAREF = 2, No load at CA0 and CA1	3 V		0.48		
$V_{(RefVT)}$	See Figure 14 and Figure 15	PCA0 = 1, CARSEL = 1, CAREF = 3, No load at CA0 and CA1, TA = 85°C	3 V		490		mV
$V_{(offset)}$	Offset voltage[(1)]		3 V		±10		mV
V_{hys}	Input hysteresis	CAON = 1	3 V		0.7		mV
$t_{(response)}$	Response time (low-high and high-low)	T_A = 25°C, Overdrive 10 mV, Without filter: CAF = 0	3 V		120		ns
		T_A = 25°C, Overdrive 10 mV, With filter: CAF = 1			1.5		µs

(1) The input offset voltage can be cancelled by using the CAEX bit to invert the Comparator_A+ inputs on successive measurements. The two successive measurements are then summed together.

Copyright © 2010–2013, Texas Instruments Incorporated

Typical Characteristics - Comparator_A+

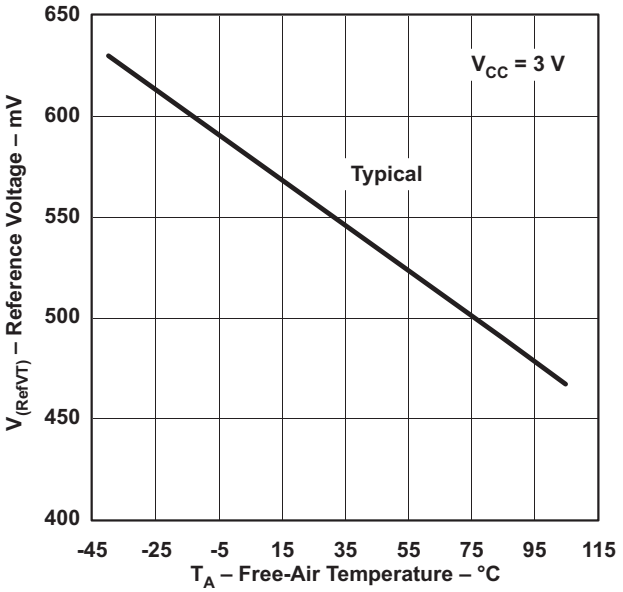

Figure 14. $V_{(RefVT)}$ vs Temperature, V_{CC} = 3 V

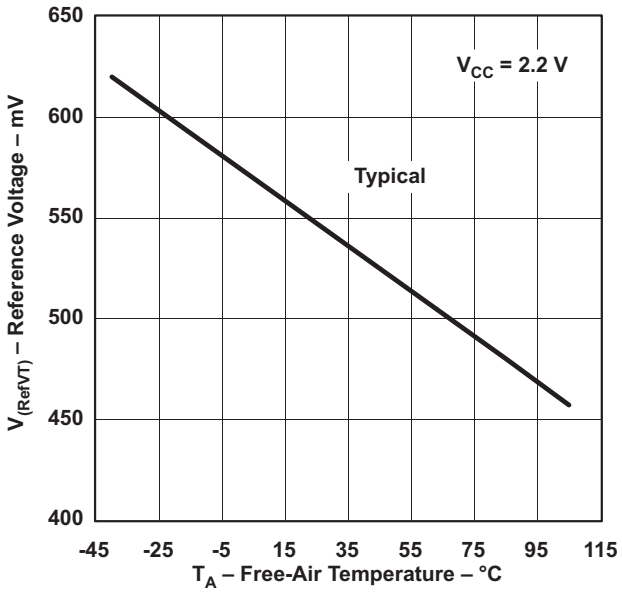

Figure 15. $V_{(RefVT)}$ vs Temperature, V_{CC} = 2.2 V

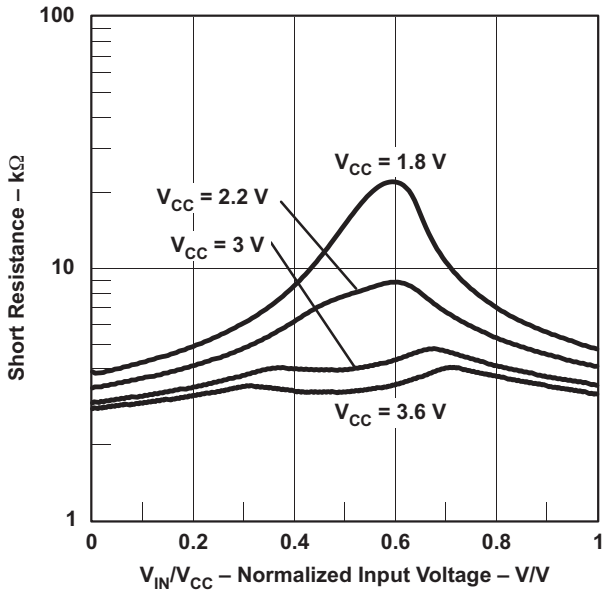

Figure 16. Short Resistance vs V_{IN}/V_{CC}

Copyright © 2010–2013, Texas Instruments Incorporated

Flash Memory

over recommended ranges of supply voltage and operating free-air temperature (unless otherwise noted)

PARAMETER		TEST CONDITIONS	V_{CC}	MIN	TYP	MAX	UNIT
$V_{CC(PGM/ERASE)}$	Program and erase supply voltage			2.2		3.6	V
f_{FTG}	Flash timing generator frequency			257		476	kHz
I_{PGM}	Supply current from V_{CC} during program		2.2 V, 3.6 V		1	5	mA
I_{ERASE}	Supply current from V_{CC} during erase		2.2 V, 3.6 V		1	7	mA
t_{CPT}	Cumulative program time (1)		2.2 V, 3.6 V			10	ms
$t_{CMErase}$	Cumulative mass erase time		2.2 V, 3.6 V	20			ms
	Program and erase endurance			10^4	10^5		cycles
$t_{Retention}$	Data retention duration	T_J = 25°C		100			years
t_{Word}	Word or byte program time (2)				30		t_{FTG}
$t_{Block, 0}$	Block program time for first byte or word (2)				25		t_{FTG}
$t_{Block, 1-63}$	Block program time for each additional byte or word (2)				18		t_{FTG}
$t_{Block, End}$	Block program end-sequence wait time (2)				6		t_{FTG}
$t_{Mass\ Erase}$	Mass erase time (2)				10593		t_{FTG}
$t_{Seg\ Erase}$	Segment erase time (2)				4819		t_{FTG}

(1) The cumulative program time must not be exceeded when writing to a 64-byte flash block. This parameter applies to all programming methods: individual word write, byte write, and block write modes.
(2) These values are hardwired into the flash controller's state machine ($t_{FTG} = 1/f_{FTG}$).

RAM

over recommended ranges of supply voltage and operating free-air temperature (unless otherwise noted)

PARAMETER		TEST CONDITIONS	MIN	MAX	UNIT
$V_{(RAMh)}$	RAM retention supply voltage (1)	CPU halted	1.6		V

(1) This parameter defines the minimum supply voltage V_{CC} when the data in RAM remains unchanged. No program execution should happen during this supply voltage condition.

Copyright © 2010–2013, Texas Instruments Incorporated

JTAG and Spy-Bi-Wire Interface

over recommended ranges of supply voltage and operating free-air temperature (unless otherwise noted)

PARAMETER		V_{CC}	MIN	TYP	MAX	UNIT
f_{SBW}	Spy-Bi-Wire input frequency	2.2 V, 3 V	0		20	MHz
$t_{SBW,Low}$	Spy-Bi-Wire low clock pulse duration	2.2 V, 3 V	0.025		15	µs
$t_{SBW,En}$	Spy-Bi-Wire enable time (TEST high to acceptance of first clock edge(1))	2.2 V, 3 V			1	µs
$t_{SBW,Ret}$	Spy-Bi-Wire return to normal operation time	2.2 V, 3 V	15		100	µs
f_{TCK}	TCK input frequency(2)	2.2 V	0		5	MHz
		3 V	0		10	MHz
$R_{Internal}$	Internal pulldown resistance on TEST	2.2 V, 3 V	25	60	90	kΩ

(1) Tools accessing the Spy-Bi-Wire interface need to wait for the maximum $t_{SBW,En}$ time after pulling the TEST/SBWTCK pin high before applying the first SBWTCK clock edge.
(2) f_{TCK} may be restricted to meet the timing requirements of the module selected.

JTAG Fuse(1)

over recommended ranges of supply voltage and operating free-air temperature (unless otherwise noted)

PARAMETER		TEST CONDITIONS	MIN	MAX	UNIT
$V_{CC(FB)}$	Supply voltage during fuse-blow condition	T_A = 25°C	2.5		V
V_{FB}	Voltage level on TEST for fuse blow		6	7	V
I_{FB}	Supply current into TEST during fuse blow			100	mA
t_{FB}	Time to blow fuse			1	ms

(1) After the fuse is blown, no further access to the JTAG/Test, Spy-Bi-Wire, or emulation feature is possible, and JTAG is switched to bypass mode.

Copyright © 2010–2013, Texas Instruments Incorporated

APPLICATION INFORMATION

Port P1 Pin Schematic: P1.0 to P1.3, Input/Output With Schmitt Trigger - MSP430G2x01

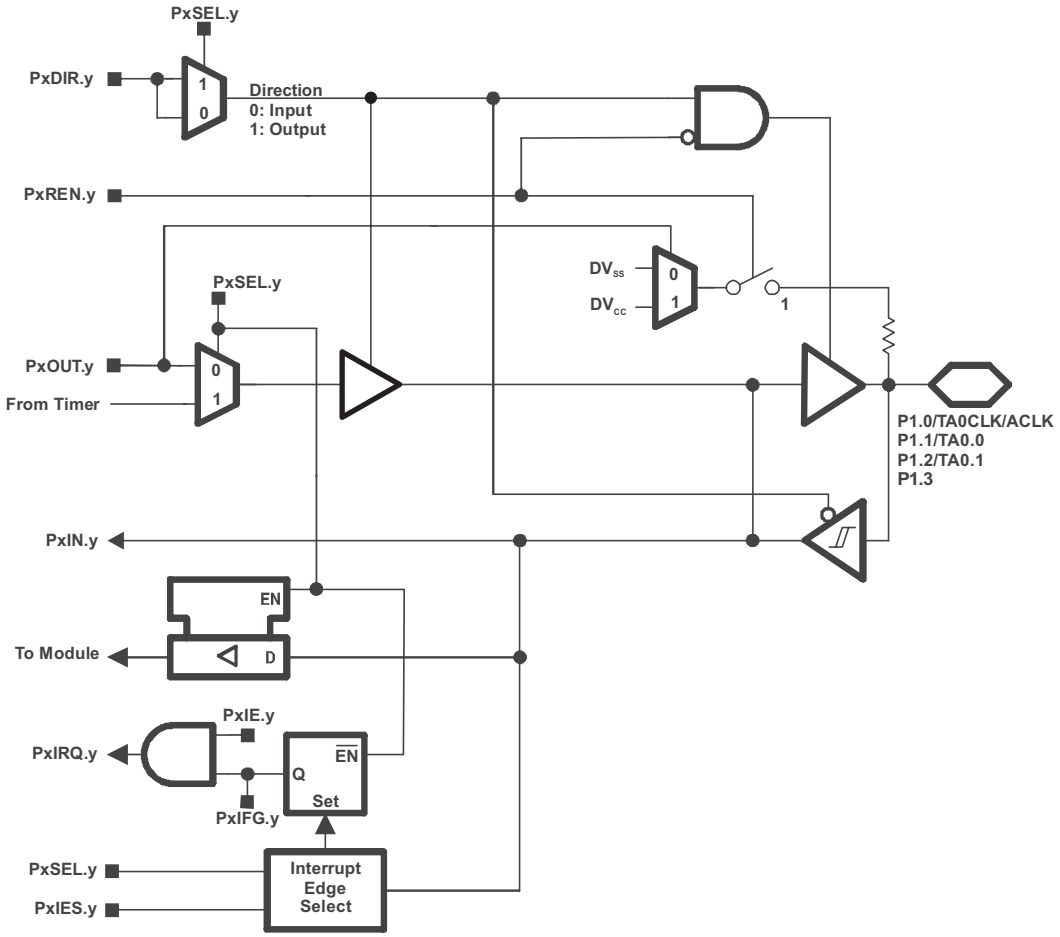

Table 14. Port P1 (P1.0 to P1.3) Pin Functions - MSP430G2x01

PIN NAME (P1.x)	x	FUNCTION	CONTROL BITS/SIGNALS	
			P1DIR.x	P1SEL.x
P1.0/	0	P1.x (I/O)	I: 0; O: 1	0
TA0CLK/		TA0CLK	0	1
ACLK		ACLK	1	1
P1.1/	1	P1.x (I/O)	I: 0; O: 1	0
TA0.0		TA0.CCI0A	0	1
		TA0.0	1	1
P1.2/	2	P1.x (I/O)	I: 0; O: 1	0
TA0.1		TA0.CCI1A	0	1
		TA0.1	1	1
P1.3	3	P1.x (I/O)	I: 0; O: 1	0

Port P1 Pin Schematic: P1.4 to P1.7, Input/Output With Schmitt Trigger - MSP430G2x01

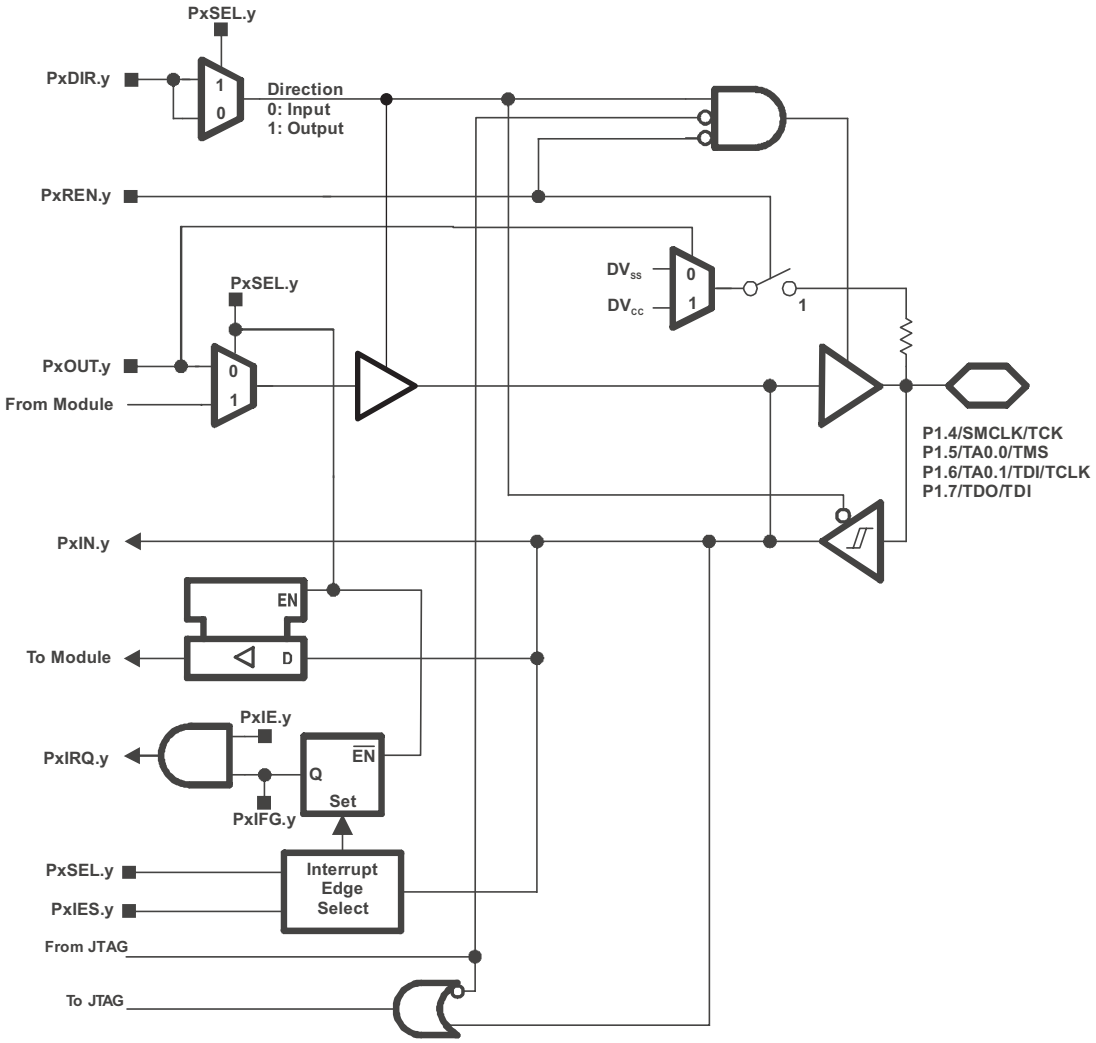

Table 15. Port P1 (P1.4 to P1.7) Pin Functions - MSP430G2x01

PIN NAME (P1.x)	x	FUNCTION	CONTROL BITS / SIGNALS[1]		
			P1DIR.x	P1SEL.x	JTAG Mode
P1.4/	4	P1.x (I/O)	I: 0; O: 1	0	0
SMCLK/		SMCLK	1	1	0
TCK		TCK	X	X	1
P1.5/	5	P1.x (I/O)	I: 0; O: 1	0	0
TA0.0/		TA0.0	1	1	0
TMS		TMS	X	X	1
P1.6/	6	P1.x (I/O)	I: 0; O: 1	0	0
TA0.1/		TA0.1	1	1	0
TDI/TCLK		TDI/TCLK	X	X	1
P1.7/	7	P1.x (I/O)	I: 0; O: 1	0	0
TDO/TDI		TDO/TDI	X	X	1

(1) X = Don't care

Copyright © 2010–2013, Texas Instruments Incorporated

Port P1 Pin Schematic: P1.0 to P1.3, Input/Output With Schmitt Trigger - MSP430G2x11

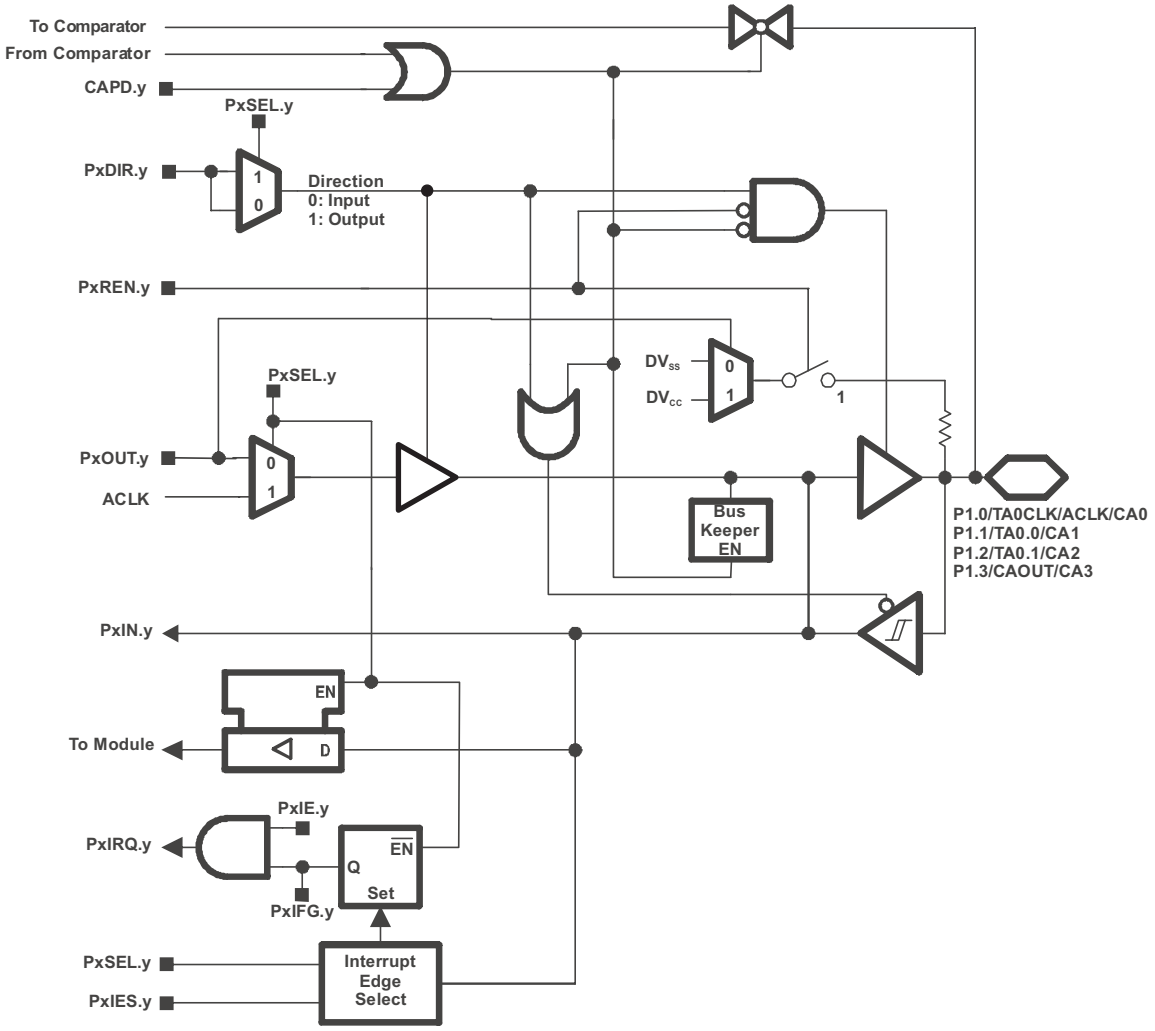

Table 16. Port P1 (P1.0 to P1.3) Pin Functions - MSP430G2x11

PIN NAME (P1.x)	x	FUNCTION	CONTROL BITS / SIGNALS (1)		
			P1DIR.x	P1SEL.x	CAPD.y
P1.0/	0	P1.x (I/O)	I: 0; O: 1	0	0
TA0CLK/		TA0.TACLK	0	1	0
ACLK/		ACLK	1	1	0
CA0		CA0	X	X	1 (y = 0)
P1.1/	1	P1.x (I/O)	I: 0; O: 1	0	0
TA0.0/		TA0.0	1	1	0
		TA0.CCI0A	0	1	0
CA1		CA1	X	X	1 (y = 1)
P1.2/	2	P1.x (I/O)	I: 0; O: 1	0	0
TA0.1/		TA0.1	1	1	0
		TA0.CCI1A	0	1	0
CA2		CA2	X	X	1 (y = 2)
P1.3/	3	P1.x (I/O)	I: 0; O: 1	0	0
CAOUT/		CAOUT	1	1	0
CA3		CA3	X	X	1 (y = 3)

(1) X = Don't care

Copyright © 2010–2013, Texas Instruments Incorporated

Port P1 Pin Schematic: P1.4 to P1.7, Input/Output With Schmitt Trigger - MSP430G2x11

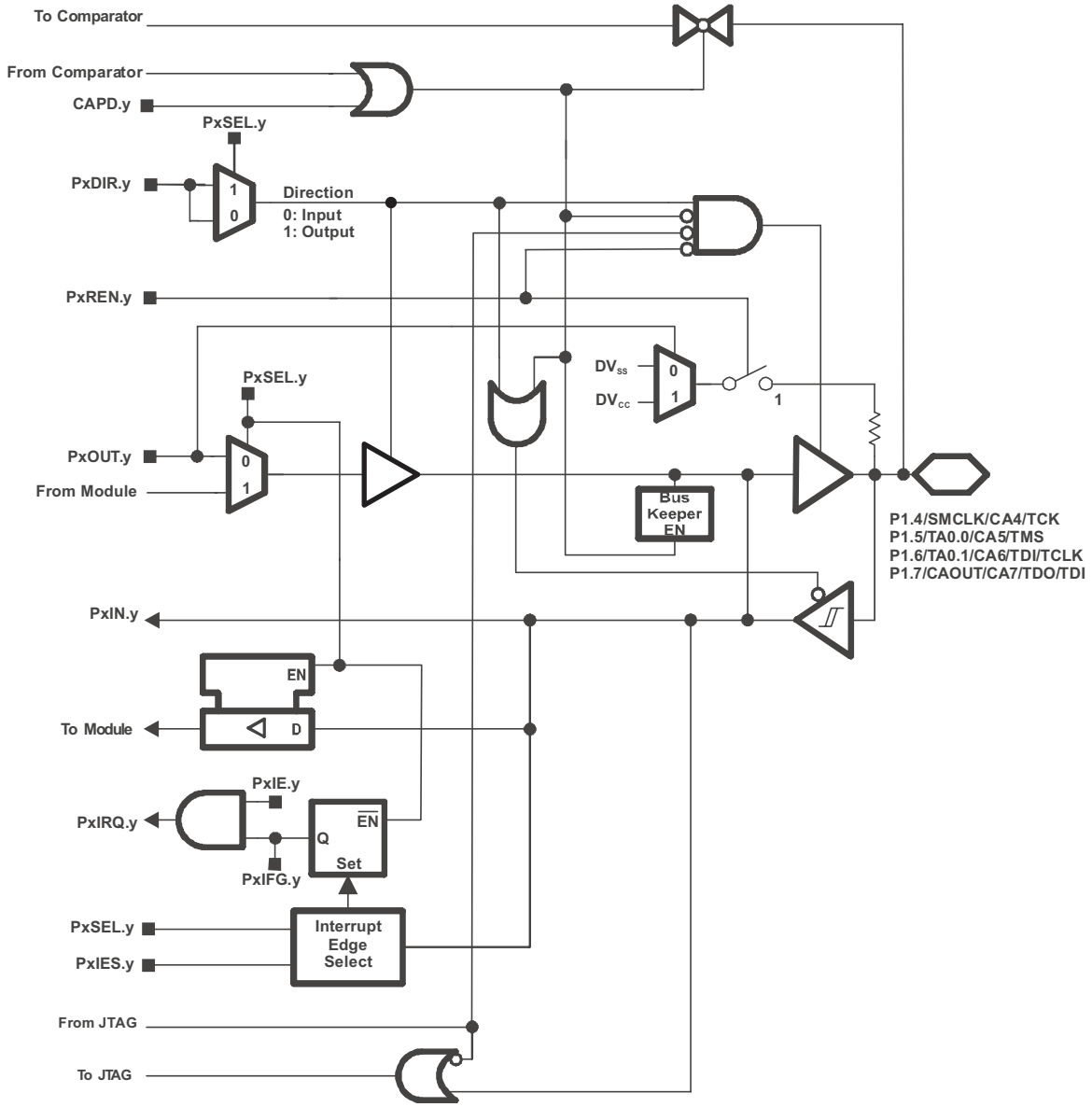

Table 17. Port P1 (P1.4 to P1.7) Pin Functions - MSP430G2x11

PIN NAME (P1.x)	x	FUNCTION	CONTROL BITS / SIGNALS[1]			
			P1DIR.x	P1SEL.x	JTAG Mode	CAPD.y
P1.4/	4	P1.x (I/O)	I: 0; O: 1	0	0	0
SMCLK/		SMCLK	1	1	0	0
CA4/		CA4	X	X	0	1 (y = 4)
TCK		TCK	X	X	1	0
P1.5/	5	P1.x (I/O)	I: 0; O: 1	0	0	0
TA0.0/		TA0.0	1	1	0	0
CA5/		CA5	X	X	0	1 (y = 5)
TMS		TMS	X	X	1	0
P1.6/	6	P1.x (I/O)	I: 0; O: 1	0	0	0
TA0.1/		TA0.1	1	1	0	0
CA6/		CA6	X	X	0	1 (y = 6)
TDI/TCLK		TDI/TCLK	X	X	1	0
P1.7/	7	P1.x (I/O)	I: 0; O: 1	0	0	0
CAOUT/		CAOUT	1	1	0	0
CA7/		CA7	X	X	0	1 (y = 7)
TDO/TDI		TDO/TDI	X	X	1	0

(1) X = Don't care

Copyright © 2010–2013, Texas Instruments Incorporated

Port P2 Pin Schematic: P2.6, Input/Output With Schmitt Trigger - MSP430G2x01 and MSP430G2x11

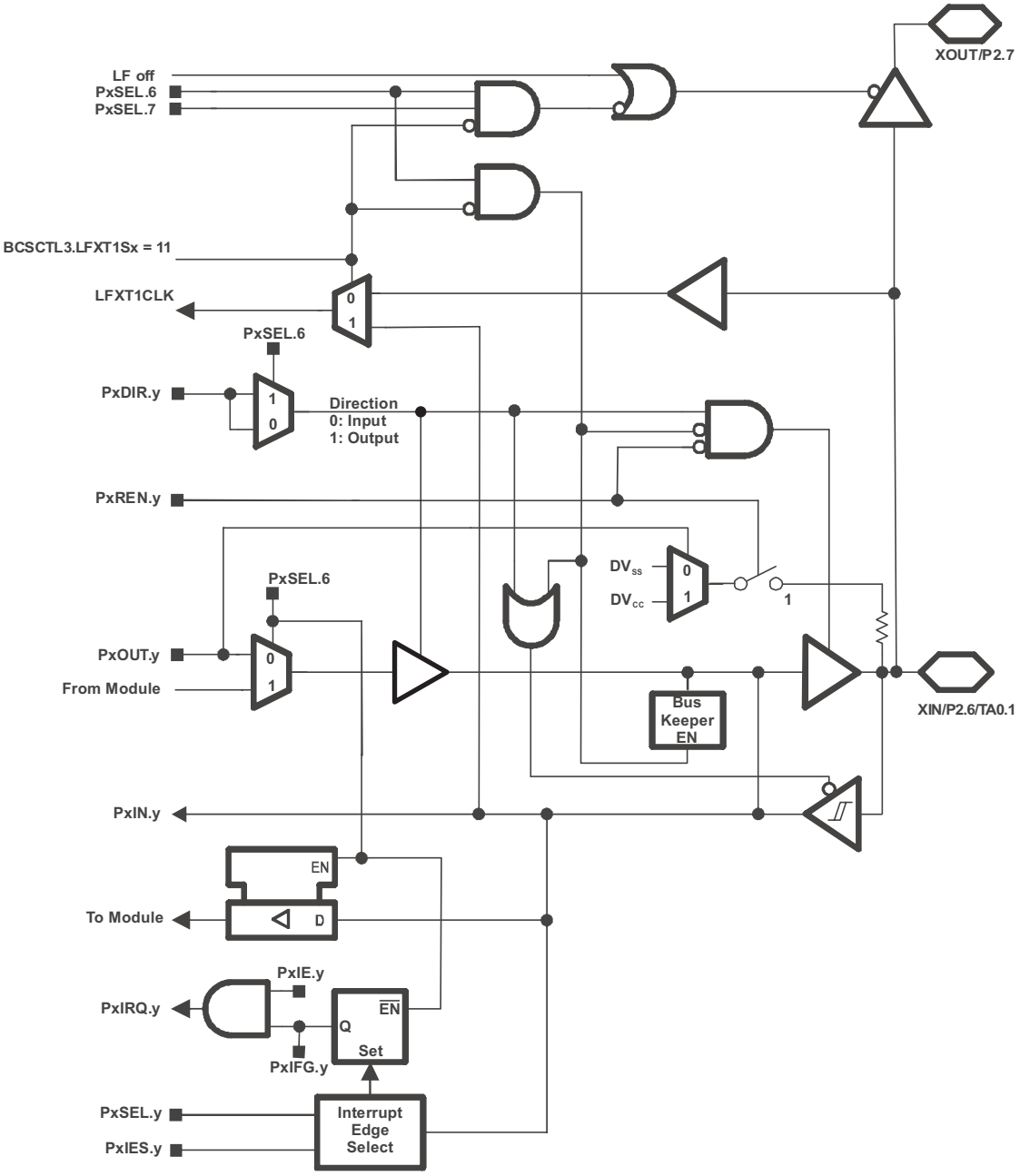

Table 18. Port P2 (P2.6) Pin Functions - MSP430G2x01 and MSP430G2x11

PIN NAME (P2.x)	x	FUNCTION	CONTROL BITS / SIGNALS(1)		
			P2DIR.x	P2SEL.6	P2SEL.7
XIN	6	XIN	0	1	1
P2.6		P2.x (I/O)	I: 0; O: 1	0	X
TA0.1		Timer0_A2.TA1	1	1	X

(1) X = Don't care

Port P2 Pin Schematic: P2.7, Input/Output With Schmitt Trigger - MSP430G2x01 and MSP430G2x11

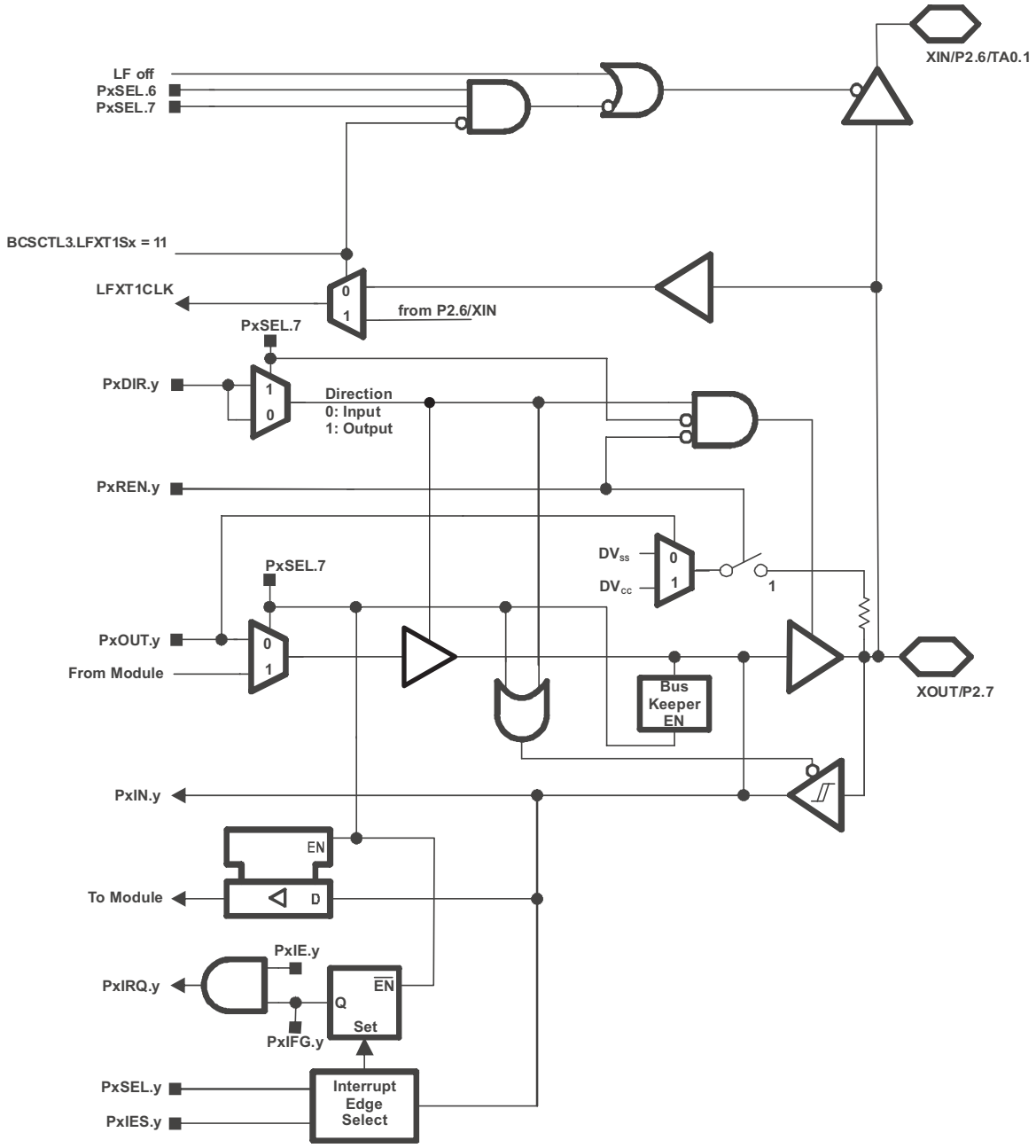

Table 19. Port P2 (P2.7) Pin Functions - MSP430G2x01 and MSP430G2x11

PIN NAME (P2.x)	x	FUNCTION	CONTROL BITS / SIGNALS		
			P2DIR.x	P2SEL.6	P2SEL.7
XOUT	7	XOUT	1	1	1
P2.7		P2.x (I/O)	I: 0; O: 1	0	0

Copyright © 2010–2013, Texas Instruments Incorporated

REVISION HISTORY

REVISION	DESCRIPTION
SLAS695	Limited Product Preview release
SLAS695A	Updated Product Preview Changes throughout for sampling
SLAS695B	Updated Product Preview
SLAS695C	Production Data release
SLAS695D	Table 14, Corrected P1DIR.x column for TA0.0 and TA0.1. Table 18, Corrected FUNCTION column for TA0.1. Port P1 Pin Schematic: P1.0 to P1.3, Input/Output With Schmitt Trigger – MSP430G2x11, Corrected schematic.
SLAS695E	Changed Storage temperature range limits in Absolute Maximum Ratings. Table 15, Removed CAPD.y column. Table 19, Corrected Control Bits/Signals.
SLAS695F	Changed T_{stg}, Programmed device, to -55°C to 150°C in Absolute Maximum Ratings. Changed f_{SYSTEM} MAX at V_{CC} = 1.8 V from 4.15 to 6 MHz in Recommended Operating Conditions.
SLAS695G	Changed port schematics (added buffer after PxOUT.y mux) in APPLICATION INFORMATION
SLAS695H	Table 2, Added pin 13 to NC list for RSA-16 package Recommended Operating Conditions, Added test conditions for typical values. POR, BOR, Added note (2).
SLAS695I	Removed all information related to operation at T temperature (-40°C to 105°C).

Copyright © 2010–2013, Texas Instruments Incorporated

PACKAGING INFORMATION

Orderable part number	Status (1)	Material type (2)	Package | Pins	Package qty | Carrier	RoHS (3)	Lead finish/ Ball material (4)	MSL rating/ Peak reflow (5)	Op temp (°C)	Part marking (6)
MSP430G2001IN14	Active	Production	PDIP (N) | 14	25 | TUBE	Yes	NIPDAU	Level-1-260C-UNLIM	-40 to 85	MSP430G2001
MSP430G2001IN14.B	Active	Production	PDIP (N) | 14	25 | TUBE	Yes	NIPDAU	Level-1-260C-UNLIM	-40 to 85	MSP430G2001
MSP430G2001IPW14	Active	Production	TSSOP (PW) | 14	90 | TUBE	Yes	NIPDAU	Level-1-260C-UNLIM	-40 to 85	G2001
MSP430G2001IPW14.B	Active	Production	TSSOP (PW) | 14	90 | TUBE	Yes	NIPDAU	Level-1-260C-UNLIM	-40 to 85	G2001
MSP430G2001IPW14R	Active	Production	TSSOP (PW) | 14	2000 | LARGE T&R	Yes	NIPDAU	Level-1-260C-UNLIM	-40 to 85	G2001
MSP430G2001IPW14R.B	Active	Production	TSSOP (PW) | 14	2000 | LARGE T&R	Yes	NIPDAU	Level-1-260C-UNLIM	-40 to 85	G2001
MSP430G2001IRSA16R	Active	Production	QFN (RSA) | 16	3000 | LARGE T&R	Yes	NIPDAU | SN	Level-2-260C-1 YEAR	-40 to 85	M430G 2001
MSP430G2001IRSA16R.B	Active	Production	QFN (RSA) | 16	3000 | LARGE T&R	Yes	NIPDAU	Level-2-260C-1 YEAR	-40 to 85	M430G 2001
MSP430G2001IRSA16T	Active	Production	QFN (RSA) | 16	250 | SMALL T&R	Yes	NIPDAU | SN	Level-2-260C-1 YEAR	-40 to 85	M430G 2001
MSP430G2001IRSA16T.B	Active	Production	QFN (RSA) | 16	250 | SMALL T&R	Yes	NIPDAU	Level-2-260C-1 YEAR	-40 to 85	M430G 2001
MSP430G2101IN14	Active	Production	PDIP (N) | 14	25 | TUBE	Yes	NIPDAU	Level-1-260C-UNLIM	-40 to 85	MSP430G2101
MSP430G2101IN14.B	Active	Production	PDIP (N) | 14	25 | TUBE	Yes	NIPDAU	Level-1-260C-UNLIM	-40 to 85	MSP430G2101
MSP430G2101IPW14	Active	Production	TSSOP (PW) | 14	90 | TUBE	Yes	NIPDAU	Level-1-260C-UNLIM	-40 to 85	G2101
MSP430G2101IPW14.B	Active	Production	TSSOP (PW) | 14	90 | TUBE	Yes	NIPDAU	Level-1-260C-UNLIM	-40 to 85	G2101
MSP430G2101IPW14R	Active	Production	TSSOP (PW) | 14	2000 | LARGE T&R	Yes	NIPDAU	Level-1-260C-UNLIM	-40 to 85	G2101
MSP430G2101IPW14R.B	Active	Production	TSSOP (PW) | 14	2000 | LARGE T&R	Yes	NIPDAU	Level-1-260C-UNLIM	-40 to 85	G2101
MSP430G2101IRSA16R	Active	Production	QFN (RSA) | 16	3000 | LARGE T&R	Yes	NIPDAU | SN	Level-2-260C-1 YEAR	-40 to 85	M430G 2101
MSP430G2101IRSA16R.B	Active	Production	QFN (RSA) | 16	3000 | LARGE T&R	Yes	NIPDAU	Level-2-260C-1 YEAR	-40 to 85	M430G 2101
MSP430G2101IRSA16T	Active	Production	QFN (RSA) | 16	250 | SMALL T&R	Yes	NIPDAU | SN	Level-2-260C-1 YEAR	-40 to 85	M430G 2101
MSP430G2101IRSA16T.B	Active	Production	QFN (RSA) | 16	250 | SMALL T&R	Yes	NIPDAU	Level-2-260C-1 YEAR	-40 to 85	M430G 2101
MSP430G2111IN14	Active	Production	PDIP (N) | 14	25 | TUBE	Yes	NIPDAU	Level-1-260C-UNLIM	-40 to 85	MSP430G2111
MSP430G2111IN14.B	Active	Production	PDIP (N) | 14	25 | TUBE	Yes	NIPDAU	Level-1-260C-UNLIM	-40 to 85	MSP430G2111
MSP430G2111IPW14	Active	Production	TSSOP (PW) | 14	90 | TUBE	Yes	NIPDAU	Level-1-260C-UNLIM	-40 to 85	G2111

Orderable part number	Status (1)	Material type (2)	Package | Pins	Package qty | Carrier	RoHS (3)	Lead finish/ Ball material (4)	MSL rating/ Peak reflow (5)	Op temp (°C)	Part marking (6)
MSP430G2111IPW14.B	Active	Production	TSSOP (PW) | 14	90 | TUBE	Yes	NIPDAU	Level-1-260C-UNLIM	-40 to 85	G2111
MSP430G2111IPW14R	Active	Production	TSSOP (PW) | 14	2000 | LARGE T&R	Yes	NIPDAU	Level-1-260C-UNLIM	-40 to 85	G2111
MSP430G2111IPW14R.B	Active	Production	TSSOP (PW) | 14	2000 | LARGE T&R	Yes	NIPDAU	Level-1-260C-UNLIM	-40 to 85	G2111
MSP430G2111IRSA16R	Active	Production	QFN (RSA) | 16	3000 | LARGE T&R	Yes	NIPDAU | SN	Level-2-260C-1 YEAR	-40 to 85	M430G 2111
MSP430G2111IRSA16R.B	Active	Production	QFN (RSA) | 16	3000 | LARGE T&R	Yes	NIPDAU	Level-2-260C-1 YEAR	-40 to 85	M430G 2111
MSP430G2111IRSA16T	Active	Production	QFN (RSA) | 16	250 | SMALL T&R	Yes	NIPDAU | SN	Level-2-260C-1 YEAR	-40 to 85	M430G 2111
MSP430G2111IRSA16T.B	Active	Production	QFN (RSA) | 16	250 | SMALL T&R	Yes	NIPDAU	Level-2-260C-1 YEAR	-40 to 85	M430G 2111
MSP430G2201IN14	Active	Production	PDIP (N) | 14	25 | TUBE	Yes	NIPDAU	Level-1-260C-UNLIM	-40 to 85	MSP430G2201
MSP430G2201IN14.B	Active	Production	PDIP (N) | 14	25 | TUBE	Yes	NIPDAU	Level-1-260C-UNLIM	-40 to 85	MSP430G2201
MSP430G2201IPW14	Active	Production	TSSOP (PW) | 14	90 | TUBE	Yes	NIPDAU	Level-1-260C-UNLIM	-40 to 85	G2201
MSP430G2201IPW14.B	Active	Production	TSSOP (PW) | 14	90 | TUBE	Yes	NIPDAU	Level-1-260C-UNLIM	-40 to 85	G2201
MSP430G2201IPW14R	Active	Production	TSSOP (PW) | 14	2000 | LARGE T&R	Yes	NIPDAU	Level-1-260C-UNLIM	-40 to 85	G2201
MSP430G2201IPW14R.B	Active	Production	TSSOP (PW) | 14	2000 | LARGE T&R	Yes	NIPDAU	Level-1-260C-UNLIM	-40 to 85	G2201
MSP430G2201IRSA16R	Active	Production	QFN (RSA) | 16	3000 | LARGE T&R	Yes	NIPDAU | SN	Level-1-260C-UNLIM	-40 to 85	M430G 2201
MSP430G2201IRSA16R.B	Active	Production	QFN (RSA) | 16	3000 | LARGE T&R	Yes	NIPDAU	Level-1-260C-UNLIM	-40 to 85	M430G 2201
MSP430G2201IRSA16T	Active	Production	QFN (RSA) | 16	250 | SMALL T&R	Yes	NIPDAU | SN	Level-1-260C-UNLIM	-40 to 85	M430G 2201
MSP430G2201IRSA16T.B	Active	Production	QFN (RSA) | 16	250 | SMALL T&R	Yes	NIPDAU	Level-1-260C-UNLIM	-40 to 85	M430G 2201
MSP430G2211IN14	Active	Production	PDIP (N) | 14	25 | TUBE	Yes	NIPDAU	Level-1-260C-UNLIM	-40 to 85	MSP430G2211
MSP430G2211IN14.B	Active	Production	PDIP (N) | 14	25 | TUBE	Yes	NIPDAU	Level-1-260C-UNLIM	-40 to 85	MSP430G2211
MSP430G2211IPW14	Active	Production	TSSOP (PW) | 14	90 | TUBE	Yes	NIPDAU	Level-1-260C-UNLIM	-40 to 85	G2211
MSP430G2211IPW14.B	Active	Production	TSSOP (PW) | 14	90 | TUBE	Yes	NIPDAU	Level-1-260C-UNLIM	-40 to 85	G2211
MSP430G2211IPW14R	Active	Production	TSSOP (PW) | 14	2000 | LARGE T&R	Yes	NIPDAU	Level-1-260C-UNLIM	-40 to 85	G2211
MSP430G2211IPW14R.B	Active	Production	TSSOP (PW) | 14	2000 | LARGE T&R	Yes	NIPDAU	Level-1-260C-UNLIM	-40 to 85	G2211
MSP430G2211IRSA16R	Active	Production	QFN (RSA) | 16	3000 | LARGE T&R	Yes	NIPDAU | SN	Level-2-260C-1 YEAR	-40 to 85	M430G 2211

Orderable part number	Status (1)	Material type (2)	Package | Pins	Package qty | Carrier	RoHS (3)	Lead finish/ Ball material (4)	MSL rating/ Peak reflow (5)	Op temp (°C)	Part marking (6)
MSP430G2211IRSA16R.B	Active	Production	QFN (RSA) | 16	3000 | LARGE T&R	Yes	NIPDAU	Level-2-260C-1 YEAR	-40 to 85	M430G 2211
MSP430G2211IRSA16T	Active	Production	QFN (RSA) | 16	250 | SMALL T&R	Yes	NIPDAU | SN	Level-2-260C-1 YEAR	-40 to 85	M430G 2211
MSP430G2211IRSA16T.B	Active	Production	QFN (RSA) | 16	250 | SMALL T&R	Yes	NIPDAU	Level-2-260C-1 YEAR	-40 to 85	M430G 2211

(1) **Status:** For more details on status, see our product life cycle.

(2) **Material type:** When designated, preproduction parts are prototypes/experimental devices, and are not yet approved or released for full production. Testing and final process, including without limitation quality assurance, reliability performance testing, and/or process qualification, may not yet be complete, and this item is subject to further changes or possible discontinuation. If available for ordering, purchases will be subject to an additional waiver at checkout, and are intended for early internal evaluation purposes only. These items are sold without warranties of any kind.

(3) **RoHS values:** Yes, No, RoHS Exempt. See the TI RoHS Statement for additional information and value definition.

(4) **Lead finish/Ball material:** Parts may have multiple material finish options. Finish options are separated by a vertical ruled line. Lead finish/Ball material values may wrap to two lines if the finish value exceeds the maximum column width.

(5) **MSL rating/Peak reflow:** The moisture sensitivity level ratings and peak solder (reflow) temperatures. In the event that a part has multiple moisture sensitivity ratings, only the lowest level per JEDEC standards is shown. Refer to the shipping label for the actual reflow temperature that will be used to mount the part to the printed circuit board.

(6) **Part marking:** There may be an additional marking, which relates to the logo, the lot trace code information, or the environmental category of the part.

Multiple part markings will be inside parentheses. Only one part marking contained in parentheses and separated by a "~" will appear on a part. If a line is indented then it is a continuation of the previous line and the two combined represent the entire part marking for that device.

Important Information and Disclaimer: The information provided on this page represents TI's knowledge and belief as of the date that it is provided. TI bases its knowledge and belief on information provided by third parties, and makes no representation or warranty as to the accuracy of such information. Efforts are underway to better integrate information from third parties. TI has taken and continues to take reasonable steps to provide representative and accurate information but may not have conducted destructive testing or chemical analysis on incoming materials and chemicals. TI and TI suppliers consider certain information to be proprietary, and thus CAS numbers and other limited information may not be available for release.

In no event shall TI's liability arising out of such information exceed the total purchase price of the TI part(s) at issue in this document sold by TI to Customer on an annual basis.

OTHER QUALIFIED VERSIONS OF MSP430G2201 :

- Automotive : MSP430G2201-Q1

NOTE: Qualified Version Definitions:

- Automotive - Q100 devices qualified for high-reliability automotive applications targeting zero defects

TAPE AND REEL INFORMATION

REEL DIMENSIONS

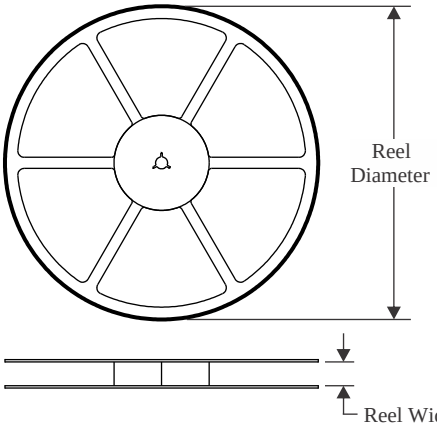

TAPE DIMENSIONS

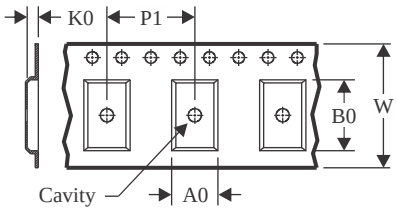

A0	Dimension designed to accommodate the component width
B0	Dimension designed to accommodate the component length
K0	Dimension designed to accommodate the component thickness
W	Overall width of the carrier tape
P1	Pitch between successive cavity centers

QUADRANT ASSIGNMENTS FOR PIN 1 ORIENTATION IN TAPE

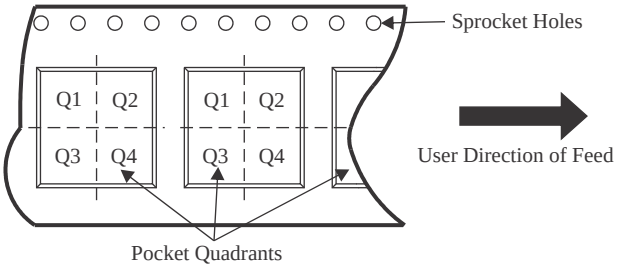

*All dimensions are nominal

Device	Package Type	Package Drawing	Pins	SPQ	Reel Diameter (mm)	Reel Width W1 (mm)	A0 (mm)	B0 (mm)	K0 (mm)	P1 (mm)	W (mm)	Pin1 Quadrant
MSP430G2001IPW14R	TSSOP	PW	14	2000	330.0	12.4	6.9	5.6	1.6	8.0	12.0	Q1
MSP430G2001IPW14R	TSSOP	PW	14	2000	330.0	12.4	6.9	5.6	1.6	8.0	12.0	Q1
MSP430G2001IRSA16R	QFN	RSA	16	3000	330.0	12.4	4.25	4.25	1.15	8.0	12.0	Q2
MSP430G2001IRSA16R	QFN	RSA	16	3000	330.0	12.4	4.25	4.25	1.15	8.0	12.0	Q2
MSP430G2001IRSA16T	QFN	RSA	16	250	180.0	12.4	4.25	4.25	1.15	8.0	12.0	Q2
MSP430G2001IRSA16T	QFN	RSA	16	250	180.0	12.4	4.25	4.25	1.15	8.0	12.0	Q2
MSP430G2101IPW14R	TSSOP	PW	14	2000	330.0	12.4	6.9	5.6	1.6	8.0	12.0	Q1
MSP430G2101IPW14R	TSSOP	PW	14	2000	330.0	12.4	6.9	5.6	1.6	8.0	12.0	Q1
MSP430G2101IRSA16R	QFN	RSA	16	3000	330.0	12.4	4.25	4.25	1.15	8.0	12.0	Q2
MSP430G2101IRSA16R	QFN	RSA	16	3000	330.0	12.4	4.25	4.25	1.15	8.0	12.0	Q2
MSP430G2101IRSA16T	QFN	RSA	16	250	180.0	12.4	4.25	4.25	1.15	8.0	12.0	Q2
MSP430G2101IRSA16T	QFN	RSA	16	250	180.0	12.4	4.25	4.25	1.15	8.0	12.0	Q2
MSP430G2111IPW14R	TSSOP	PW	14	2000	330.0	12.4	6.9	5.6	1.6	8.0	12.0	Q1
MSP430G2111IPW14R	TSSOP	PW	14	2000	330.0	12.4	6.9	5.6	1.6	8.0	12.0	Q1
MSP430G2111IRSA16R	QFN	RSA	16	3000	330.0	12.4	4.25	4.25	1.15	8.0	12.0	Q2
MSP430G2111IRSA16R	QFN	RSA	16	3000	330.0	12.4	4.25	4.25	1.15	8.0	12.0	Q2

Device	Package Type	Package Drawing	Pins	SPQ	Reel Diameter (mm)	Reel Width W1 (mm)	A0 (mm)	B0 (mm)	K0 (mm)	P1 (mm)	W (mm)	Pin1 Quadrant
MSP430G2111IRSA16T	QFN	RSA	16	250	180.0	12.4	4.25	4.25	1.15	8.0	12.0	Q2
MSP430G2111IRSA16T	QFN	RSA	16	250	180.0	12.4	4.25	4.25	1.15	8.0	12.0	Q2
MSP430G2201IPW14R	TSSOP	PW	14	2000	330.0	12.4	6.9	5.6	1.6	8.0	12.0	Q1
MSP430G2201IPW14R	TSSOP	PW	14	2000	330.0	12.4	6.9	5.6	1.6	8.0	12.0	Q1
MSP430G2201IRSA16R	QFN	RSA	16	3000	330.0	12.4	4.25	4.25	1.15	8.0	12.0	Q2
MSP430G2201IRSA16R	QFN	RSA	16	3000	330.0	12.4	4.25	4.25	1.15	8.0	12.0	Q2
MSP430G2201IRSA16T	QFN	RSA	16	250	180.0	12.4	4.25	4.25	1.15	8.0	12.0	Q2
MSP430G2201IRSA16T	QFN	RSA	16	250	180.0	12.4	4.25	4.25	1.15	8.0	12.0	Q2
MSP430G2211IPW14R	TSSOP	PW	14	2000	330.0	12.4	6.9	5.6	1.6	8.0	12.0	Q1
MSP430G2211IPW14R	TSSOP	PW	14	2000	330.0	12.4	6.9	5.6	1.6	8.0	12.0	Q1
MSP430G2211IRSA16R	QFN	RSA	16	3000	330.0	12.4	4.25	4.25	1.15	8.0	12.0	Q2
MSP430G2211IRSA16R	QFN	RSA	16	3000	330.0	12.4	4.25	4.25	1.15	8.0	12.0	Q2
MSP430G2211IRSA16T	QFN	RSA	16	250	180.0	12.4	4.25	4.25	1.15	8.0	12.0	Q2
MSP430G2211IRSA16T	QFN	RSA	16	250	180.0	12.4	4.25	4.25	1.15	8.0	12.0	Q2

TAPE AND REEL BOX DIMENSIONS

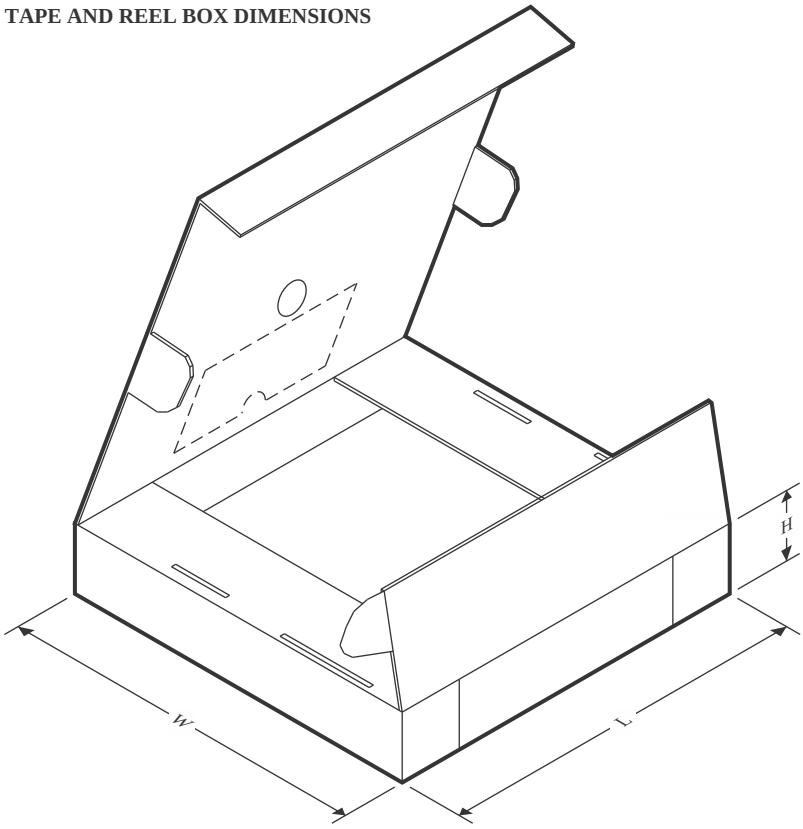

*All dimensions are nominal

Device	Package Type	Package Drawing	Pins	SPQ	Length (mm)	Width (mm)	Height (mm)
MSP430G2001IPW14R	TSSOP	PW	14	2000	353.0	353.0	32.0
MSP430G2001IPW14R	TSSOP	PW	14	2000	350.0	350.0	43.0
MSP430G2001IRSA16R	QFN	RSA	16	3000	346.0	346.0	33.0
MSP430G2001IRSA16R	QFN	RSA	16	3000	367.0	367.0	35.0
MSP430G2001IRSA16T	QFN	RSA	16	250	210.0	185.0	35.0
MSP430G2001IRSA16T	QFN	RSA	16	250	210.0	185.0	35.0
MSP430G2101IPW14R	TSSOP	PW	14	2000	353.0	353.0	32.0
MSP430G2101IPW14R	TSSOP	PW	14	2000	350.0	350.0	43.0
MSP430G2101IRSA16R	QFN	RSA	16	3000	367.0	367.0	35.0
MSP430G2101IRSA16R	QFN	RSA	16	3000	346.0	346.0	33.0
MSP430G2101IRSA16T	QFN	RSA	16	250	210.0	185.0	35.0
MSP430G2101IRSA16T	QFN	RSA	16	250	210.0	185.0	35.0
MSP430G2111IPW14R	TSSOP	PW	14	2000	350.0	350.0	43.0
MSP430G2111IPW14R	TSSOP	PW	14	2000	353.0	353.0	32.0
MSP430G2111IRSA16R	QFN	RSA	16	3000	367.0	367.0	35.0
MSP430G2111IRSA16R	QFN	RSA	16	3000	367.0	367.0	35.0
MSP430G2111IRSA16T	QFN	RSA	16	250	210.0	185.0	35.0
MSP430G2111IRSA16T	QFN	RSA	16	250	210.0	185.0	35.0

Device	Package Type	Package Drawing	Pins	SPQ	Length (mm)	Width (mm)	Height (mm)
MSP430G2201IPW14R	TSSOP	PW	14	2000	350.0	350.0	43.0
MSP430G2201IPW14R	TSSOP	PW	14	2000	353.0	353.0	32.0
MSP430G2201IRSA16R	QFN	RSA	16	3000	346.0	346.0	33.0
MSP430G2201IRSA16R	QFN	RSA	16	3000	367.0	367.0	35.0
MSP430G2201IRSA16T	QFN	RSA	16	250	210.0	185.0	35.0
MSP430G2201IRSA16T	QFN	RSA	16	250	182.0	182.0	20.0
MSP430G2211IPW14R	TSSOP	PW	14	2000	353.0	353.0	32.0
MSP430G2211IPW14R	TSSOP	PW	14	2000	350.0	350.0	43.0
MSP430G2211IRSA16R	QFN	RSA	16	3000	346.0	346.0	33.0
MSP430G2211IRSA16R	QFN	RSA	16	3000	367.0	367.0	35.0
MSP430G2211IRSA16T	QFN	RSA	16	250	210.0	185.0	35.0
MSP430G2211IRSA16T	QFN	RSA	16	250	210.0	185.0	35.0

TUBE

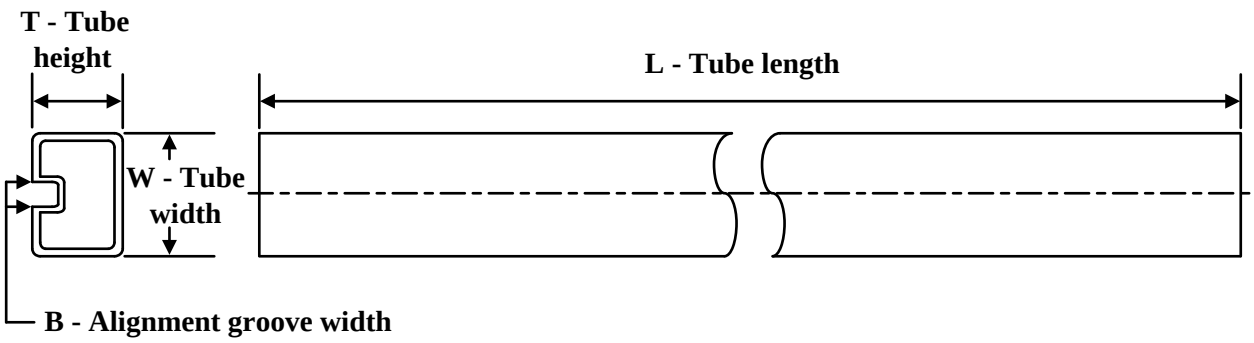

*All dimensions are nominal

Device	Package Name	Package Type	Pins	SPQ	L (mm)	W (mm)	T (µm)	B (mm)
MSP430G2001IN14	N	PDIP	14	25	506	13.97	11230	4.32
MSP430G2001IN14.B	N	PDIP	14	25	506	13.97	11230	4.32
MSP430G2001IPW14	PW	TSSOP	14	90	530	10.2	3600	3.5
MSP430G2001IPW14	PW	TSSOP	14	90	530	10.2	3600	3.5
MSP430G2001IPW14.B	PW	TSSOP	14	90	530	10.2	3600	3.5
MSP430G2001IPW14.B	PW	TSSOP	14	90	530	10.2	3600	3.5
MSP430G2101IN14	N	PDIP	14	25	506	13.97	11230	4.32
MSP430G2101IN14.B	N	PDIP	14	25	506	13.97	11230	4.32
MSP430G2101IPW14	PW	TSSOP	14	90	530	10.2	3600	3.5
MSP430G2101IPW14	PW	TSSOP	14	90	530	10.2	3600	3.5
MSP430G2101IPW14.B	PW	TSSOP	14	90	530	10.2	3600	3.5
MSP430G2101IPW14.B	PW	TSSOP	14	90	530	10.2	3600	3.5
MSP430G2111IN14	N	PDIP	14	25	506	13.97	11230	4.32
MSP430G2111IN14.B	N	PDIP	14	25	506	13.97	11230	4.32
MSP430G2111IPW14	PW	TSSOP	14	90	530	10.2	3600	3.5
MSP430G2111IPW14	PW	TSSOP	14	90	530	10.2	3600	3.5
MSP430G2111IPW14.B	PW	TSSOP	14	90	530	10.2	3600	3.5
MSP430G2111IPW14.B	PW	TSSOP	14	90	530	10.2	3600	3.5
MSP430G2201IN14	N	PDIP	14	25	506	13.97	11230	4.32
MSP430G2201IN14.B	N	PDIP	14	25	506	13.97	11230	4.32
MSP430G2201IPW14	PW	TSSOP	14	90	530	10.2	3600	3.5
MSP430G2201IPW14	PW	TSSOP	14	90	530	10.2	3600	3.5
MSP430G2201IPW14.B	PW	TSSOP	14	90	530	10.2	3600	3.5
MSP430G2201IPW14.B	PW	TSSOP	14	90	530	10.2	3600	3.5
MSP430G2211IN14	N	PDIP	14	25	506	13.97	11230	4.32
MSP430G2211IN14.B	N	PDIP	14	25	506	13.97	11230	4.32
MSP430G2211IPW14	PW	TSSOP	14	90	530	10.2	3600	3.5
MSP430G2211IPW14	PW	TSSOP	14	90	530	10.2	3600	3.5
MSP430G2211IPW14.B	PW	TSSOP	14	90	530	10.2	3600	3.5

Device	Package Name	Package Type	Pins	SPQ	L (mm)	W (mm)	T (µm)	B (mm)
MSP430G2211IPW14.B	PW	TSSOP	14	90	530	10.2	3600	3.5

N (R–PDIP–T**) PLASTIC DUAL–IN–LINE PACKAGE

16 PINS SHOWN

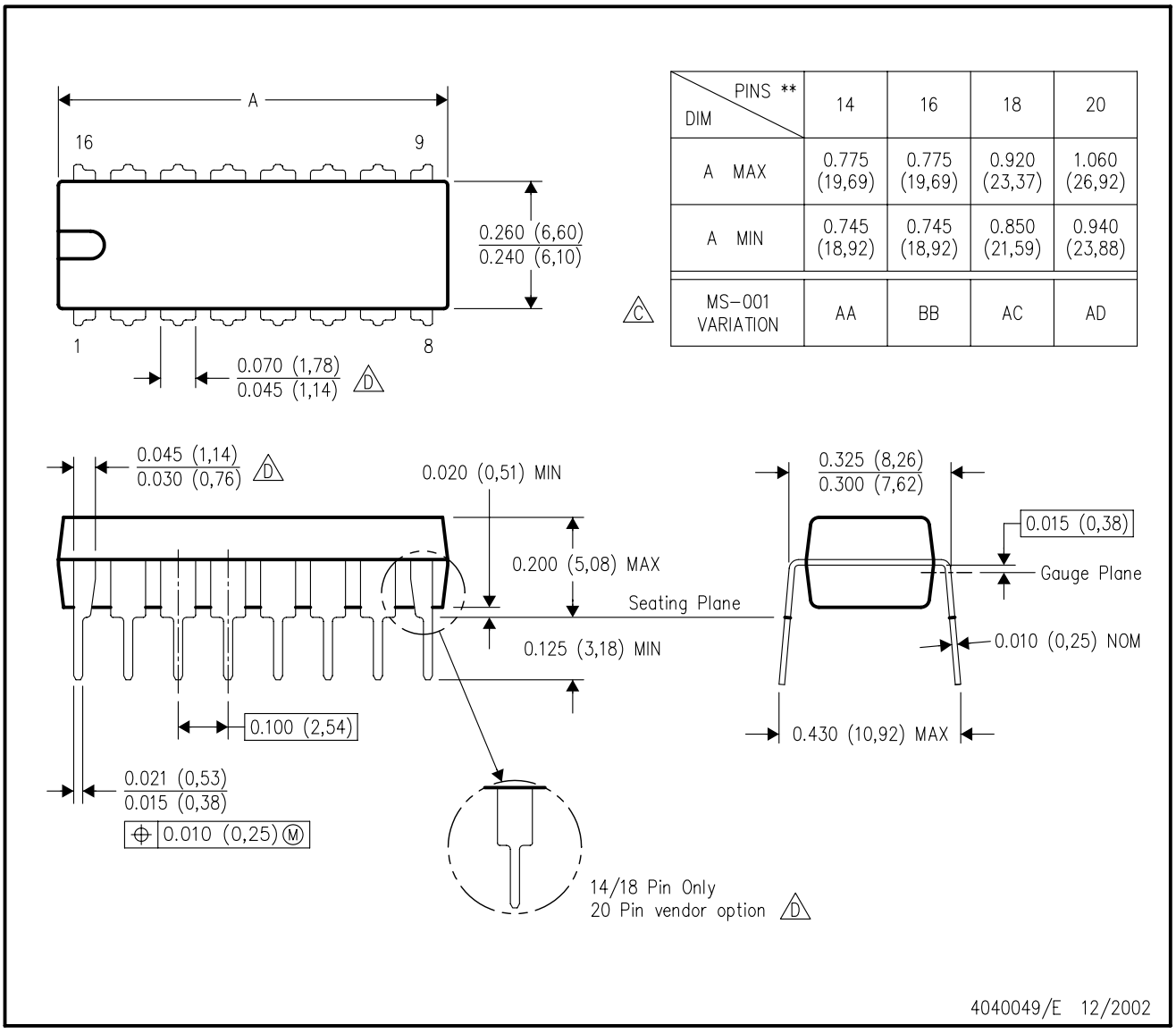

DIM \ PINS **	14	16	18	20
A MAX	0.775 (19,69)	0.775 (19,69)	0.920 (23,37)	1.060 (26,92)
A MIN	0.745 (18,92)	0.745 (18,92)	0.850 (21,59)	0.940 (23,88)
MS–001 VARIATION (C)	AA	BB	AC	AD

NOTES:
A. All linear dimensions are in inches (millimeters).
B. This drawing is subject to change without notice.
C. Falls within JEDEC MS–001, except 18 and 20 pin minimum body length (Dim A).
D. The 20 pin end lead shoulder width is a vendor option, either half or full width.

PW0014A

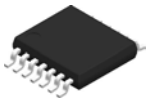

PACKAGE OUTLINE

TSSOP - 1.2 mm max height

SMALL OUTLINE PACKAGE

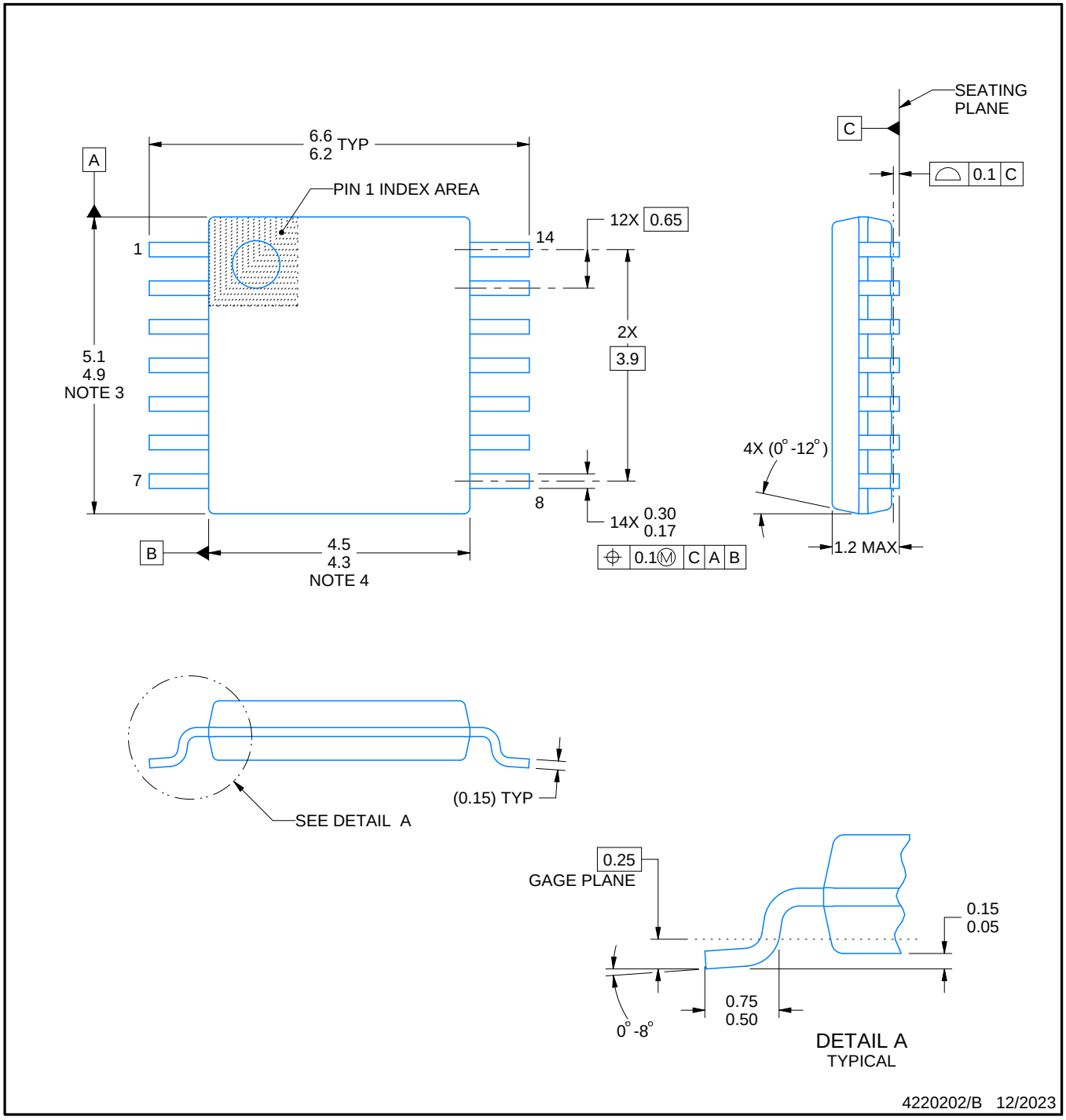

NOTES:

1. All linear dimensions are in millimeters. Any dimensions in parenthesis are for reference only. Dimensioning and tolerancing per ASME Y14.5M.
2. This drawing is subject to change without notice.
3. This dimension does not include mold flash, protrusions, or gate burrs. Mold flash, protrusions, or gate burrs shall not exceed 0.15 mm per side.
4. This dimension does not include interlead flash. Interlead flash shall not exceed 0.25 mm per side.
5. Reference JEDEC registration MO-153.

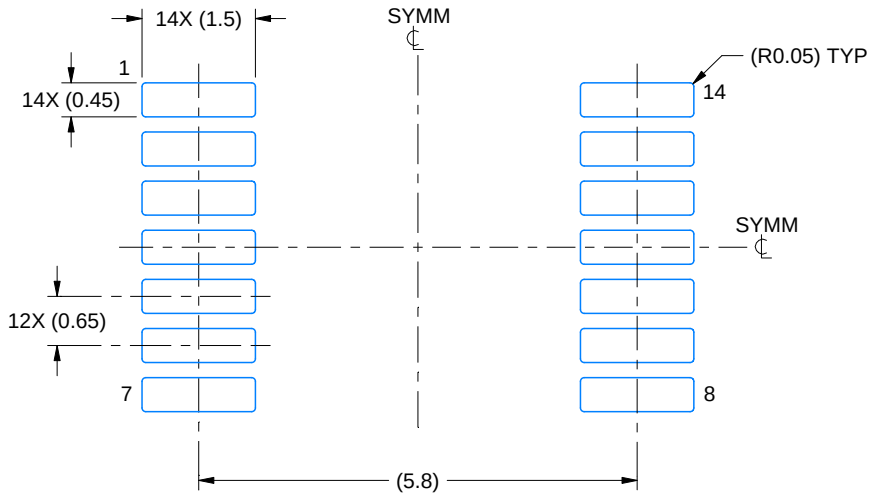

LAND PATTERN EXAMPLE
EXPOSED METAL SHOWN
SCALE: 10X

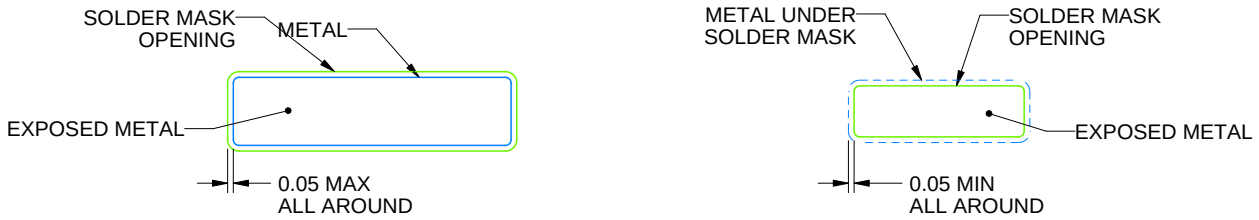

NON-SOLDER MASK DEFINED (PREFERRED)

SOLDER MASK DEFINED

SOLDER MASK DETAILS

4220202/B 12/2023

NOTES: (continued)

6. Publication IPC-7351 may have alternate designs.
7. Solder mask tolerances between and around signal pads can vary based on board fabrication site.

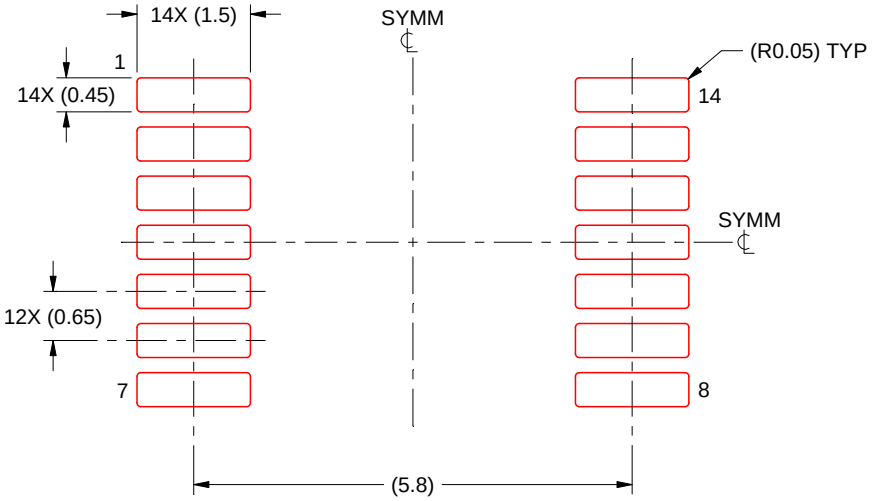

SOLDER PASTE EXAMPLE
BASED ON 0.125 mm THICK STENCIL
SCALE: 10X

4220202/B 12/2023

NOTES: (continued)

8. Laser cutting apertures with trapezoidal walls and rounded corners may offer better paste release. IPC-7525 may have alternate design recommendations.
9. Board assembly site may have different recommendations for stencil design.

GENERIC PACKAGE VIEW

RSA 16

VQFN - 1 mm max height

4 x 4, 0.65 mm pitch

PLASTIC QUAD FLATPACK - NO LEAD

This image is a representation of the package family, actual package may vary.
Refer to the product data sheet for package details.

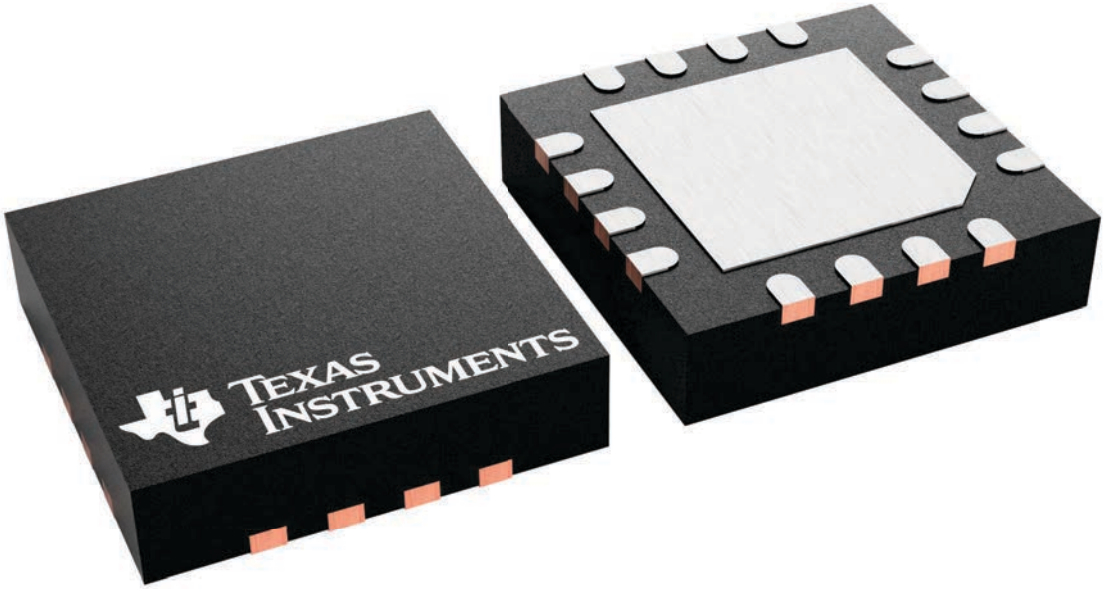

4230969/A

RSA0016B

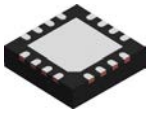

PACKAGE OUTLINE

VQFN - 1 mm max height

PLASTIC QUAD FLATPACK - NO LEAD

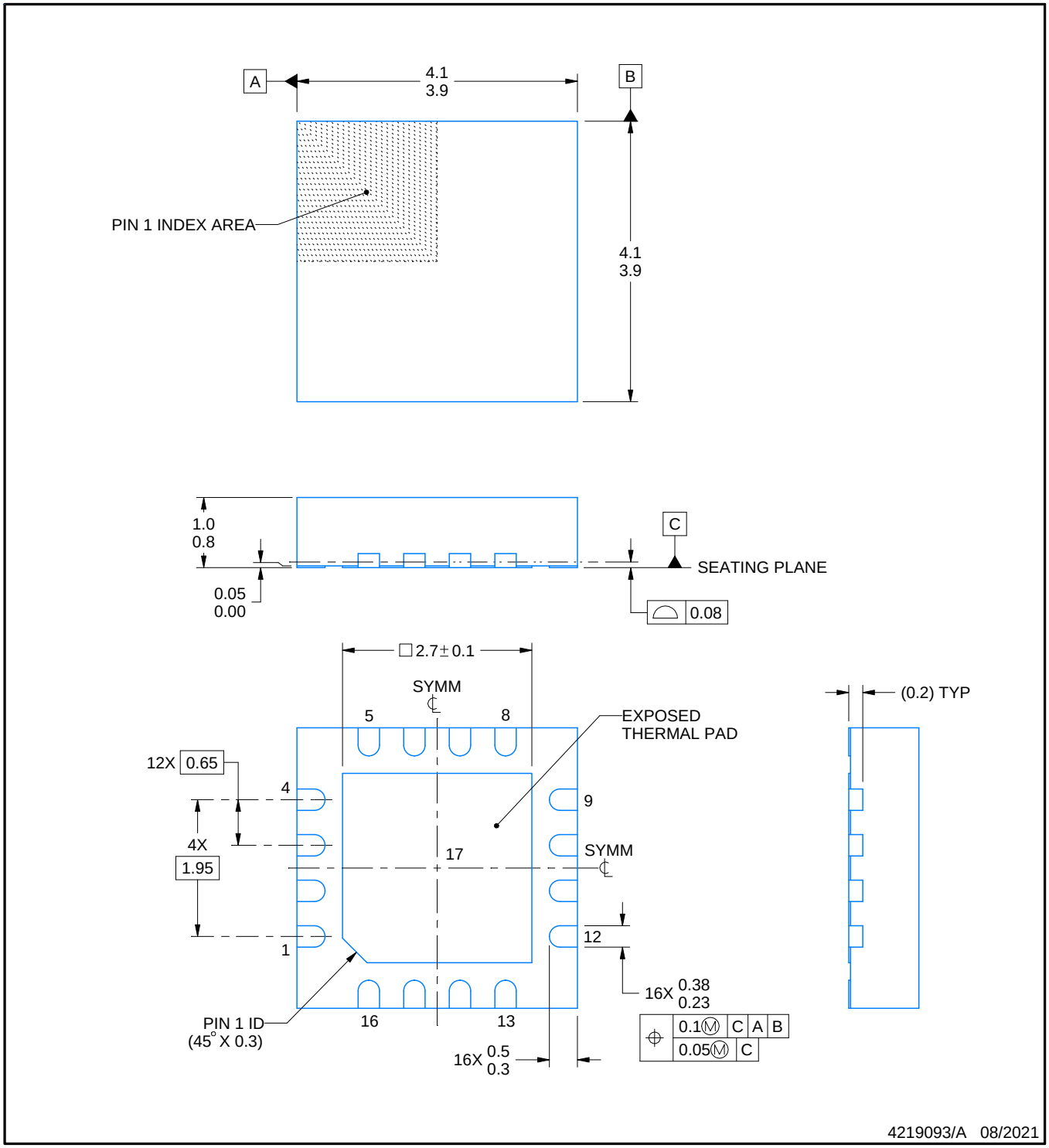

NOTES:

1. All linear dimensions are in millimeters. Any dimensions in parenthesis are for reference only. Dimensioning and tolerancing per ASME Y14.5M.
2. This drawing is subject to change without notice.
3. The package thermal pad must be soldered to the printed circuit board for thermal and mechanical performance.
4. Reference JEDEC registration MO-220.

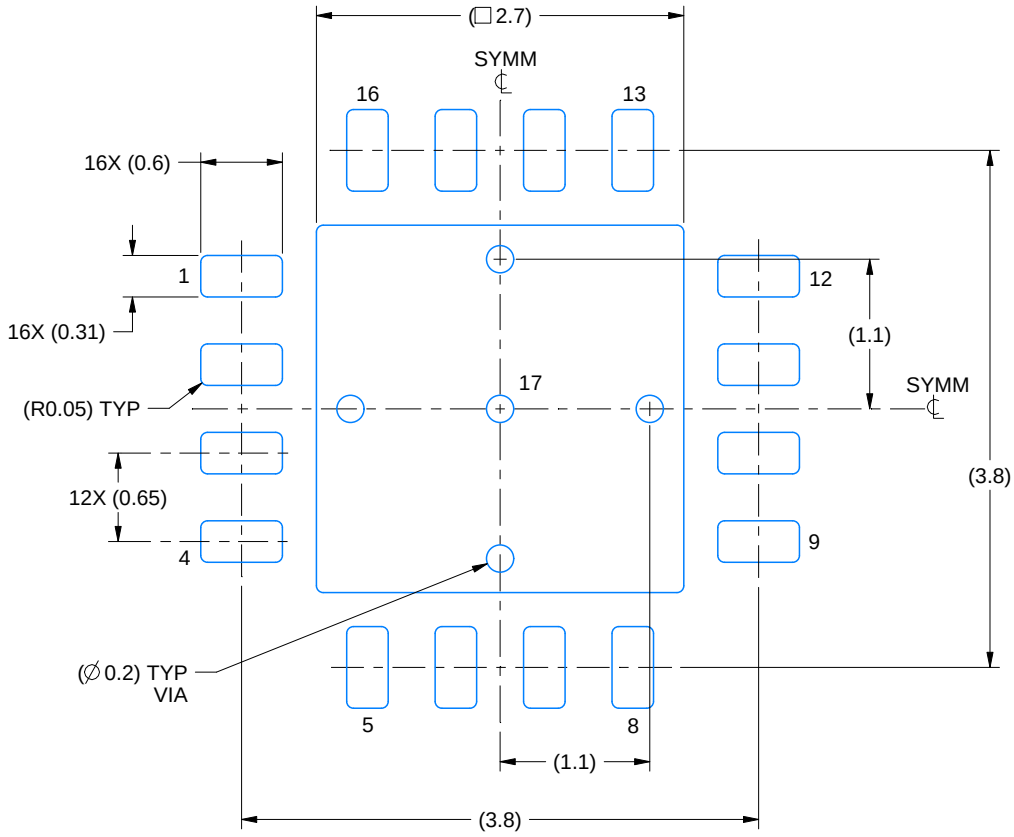

LAND PATTERN EXAMPLE
EXPOSED METAL SHOWN
SCALE:18X

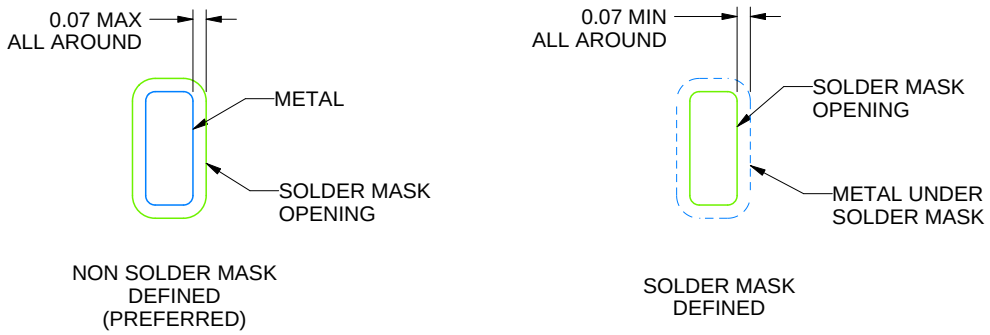

SOLDER MASK DETAILS

4219093/A 08/2021

NOTES: (continued)

5. This package is designed to be soldered to a thermal pad on the board. For more information, see Texas Instruments literature number SLUA271 (www.ti.com/lit/slua271).
6. Vias are optional depending on application, refer to device data sheet. If any vias are implemented, refer to their locations shown on this view. It is recommended that vias under paste be filled, plugged or tented.

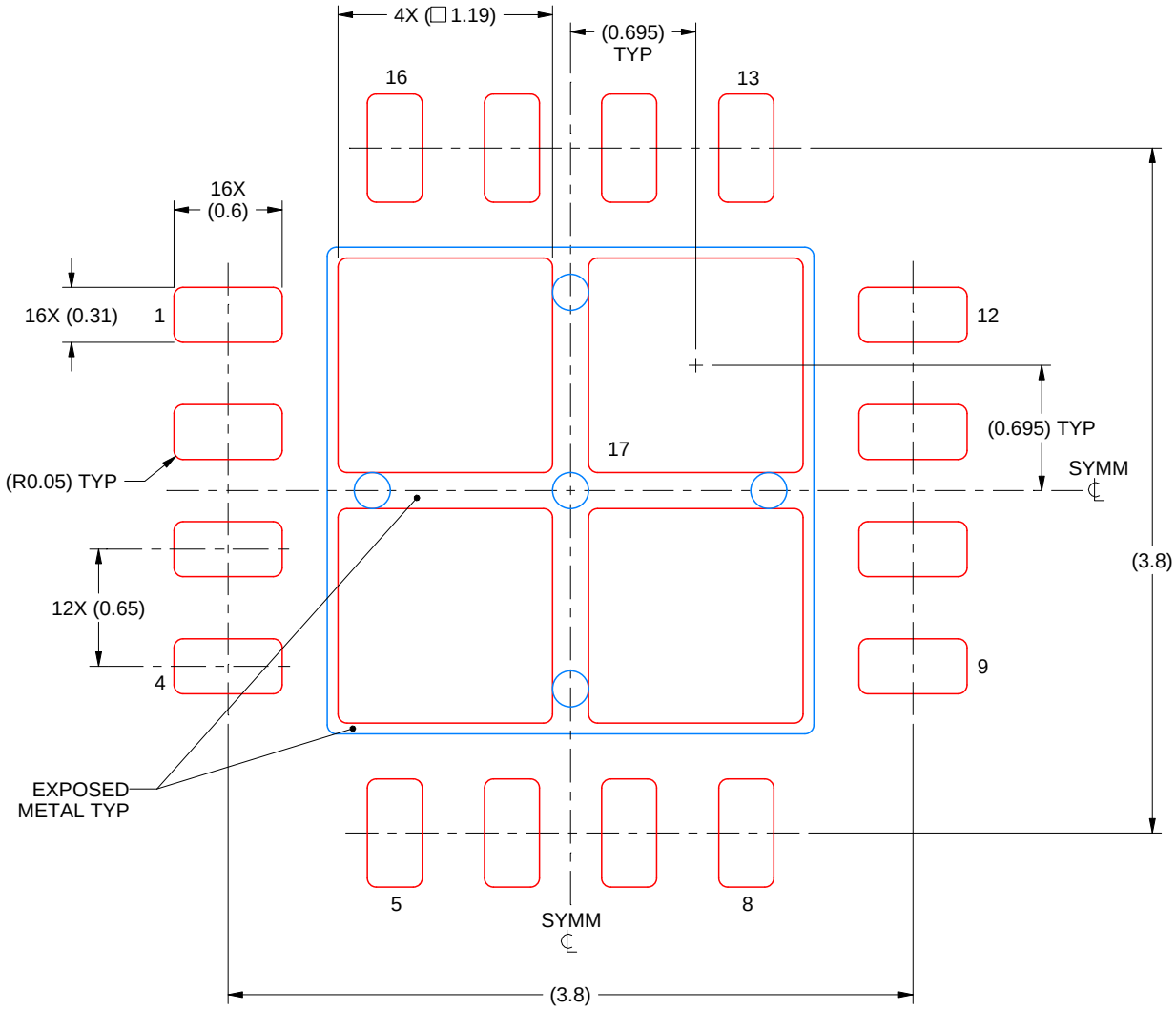

SOLDER PASTE EXAMPLE
BASED ON 0.125 mm THICK STENCIL

EXPOSED PAD
77% PRINTED SOLDER COVERAGE BY AREA
SCALE:25X

4219093/A 08/2021

NOTES: (continued)

7. Laser cutting apertures with trapezoidal walls and rounded corners may offer better paste release. IPC-7525 may have alternate design recommendations.

IMPORTANT NOTICE AND DISCLAIMER

TI PROVIDES TECHNICAL AND RELIABILITY DATA (INCLUDING DATASHEETS), DESIGN RESOURCES (INCLUDING REFERENCE DESIGNS), APPLICATION OR OTHER DESIGN ADVICE, WEB TOOLS, SAFETY INFORMATION, AND OTHER RESOURCES “AS IS” AND WITH ALL FAULTS, AND DISCLAIMS ALL WARRANTIES, EXPRESS AND IMPLIED, INCLUDING WITHOUT LIMITATION ANY IMPLIED WARRANTIES OF MERCHANTABILITY, FITNESS FOR A PARTICULAR PURPOSE OR NON-INFRINGEMENT OF THIRD PARTY INTELLECTUAL PROPERTY RIGHTS.

These resources are intended for skilled developers designing with TI products. You are solely responsible for (1) selecting the appropriate TI products for your application, (2) designing, validating and testing your application, and (3) ensuring your application meets applicable standards, and any other safety, security, regulatory or other requirements.

These resources are subject to change without notice. TI grants you permission to use these resources only for development of an application that uses the TI products described in the resource. Other reproduction and display of these resources is prohibited. No license is granted to any other TI intellectual property right or to any third party intellectual property right. TI disclaims responsibility for, and you fully indemnify TI and its representatives against any claims, damages, costs, losses, and liabilities arising out of your use of these resources.

TI’s products are provided subject to TI’s Terms of Sale, TI’s General Quality Guidelines, or other applicable terms available either on ti.com or provided in conjunction with such TI products. TI’s provision of these resources does not expand or otherwise alter TI’s applicable warranties or warranty disclaimers for TI products. Unless TI explicitly designates a product as custom or customer-specified, TI products are standard, catalog, general purpose devices.

TI objects to and rejects any additional or different terms you may propose.

Copyright © 2026, Texas Instruments Incorporated

Last updated 10/2025