MSP430G2x33, MSP430G2x03 Mixed-Signal Microcontrollers

1 Device Overview

1.1 Features

- Low Supply-Voltage Range: 1.8 V to 3.6 V
- Ultra-Low Power Consumption
  - Active Mode: 230 µA at 1 MHz, 2.2 V
  - Standby Mode: 0.5 µA
  - Off Mode (RAM Retention): 0.1 µA
- Five Power-Saving Modes
- Ultra-Fast Wake up From Standby Mode in Less Than 1 µs
- 16-Bit RISC Architecture, 62.5-ns Instruction Cycle Time
- Basic Clock Module Configurations
  - Internal Frequencies up to 16 MHz With Four Calibrated Frequencies
  - Internal Very-Low-Power Low-Frequency (LF) Oscillator
  - 32-kHz Crystal
  - External Digital Clock Source
- Two 16-Bit Timer_A With Three Capture/Compare Registers
- Up to 24 Capacitive-Touch Enabled I/O Pins
- Universal Serial Communication Interface (USCI)
  - Enhanced UART Supports Automatic Baud-Rate Detection (LIN)
  - IrDA Encoder and Decoder
  - Synchronous SPI
  - I^2C
- 10-Bit 200-ksps Analog-to-Digital Converter (ADC) With Internal Reference, Sample-and-Hold, and Autoscan (See Table 3-1)
- Brownout Detector
- Serial Onboard Programming, No External Programming Voltage Needed, Programmable Code Protection by Security Fuse
- On-Chip Emulation Logic With Spy-Bi-Wire Interface
- Section 3 Summarizes Available Family Members
- Package Options
  - TSSOP: 20 Pin, 28 Pin
  - PDIP: 20 Pin
  - QFN: 32 Pin
- For Complete Module Descriptions, See the *MSP430x2xx Family User's Guide* (SLAU144)

1.2 Applications

- Power Management
- Sensor Interface
- Capacitive Touch

1.3 Description

The TI MSP family of ultra-low-power microcontrollers consists of several devices that feature different sets of peripherals targeted for various applications. The architecture, combined with five low-power modes, is optimized to achieve extended battery life in portable measurement applications. The device features a powerful 16-bit RISC CPU, 16-bit registers, and constant generators that contribute to maximum code efficiency. The digitally controlled oscillator (DCO) allows the device to wake up from low-power modes to active mode in less than 1 µs.

The MSP430G2x03 and MSP430G2x33 devices are ultra-low-power mixed-signal microcontrollers with built-in 16-bit timers, up to 24 I/O capacitive-touch enabled pins, and built-in communication capability using the USCI. In addition, the MSP430G2x33 family members have a 10-bit ADC. See Section 3 for configuration details.

Typical applications include low-cost sensor systems that capture analog signals, convert them to digital values, and then process the data for display or for transmission to a host system.

An IMPORTANT NOTICE at the end of this data sheet addresses availability, warranty, changes, use in safety-critical applications, intellectual property matters and other important disclaimers. PRODUCTION DATA.

Device Information(1)

PART NUMBER	PACKAGE	BODY SIZE(2)
MSP430G2533IRHB	VQFN (32)	5 mm × 5 mm
MSP430G2533IPW	TSSOP (28)	9.7 mm × 4.4 mm
	TSSOP (20)	6.5 mm × 4.4 mm
MSP430G2533IN	PDIP (20)	24.33 mm × 6.35 mm

(1) For the most current part, package, and ordering information, see the *Package Option Addendum* in Section 8, or see the TI website at www.ti.com.
(2) The sizes shown here are approximations. For the package dimensions with tolerances, see the *Mechanical Data* in Section 8.

1.4 Functional Block Diagrams

Figure 1-1 shows the functional block diagram of the MSP430G2x33 MCUs.

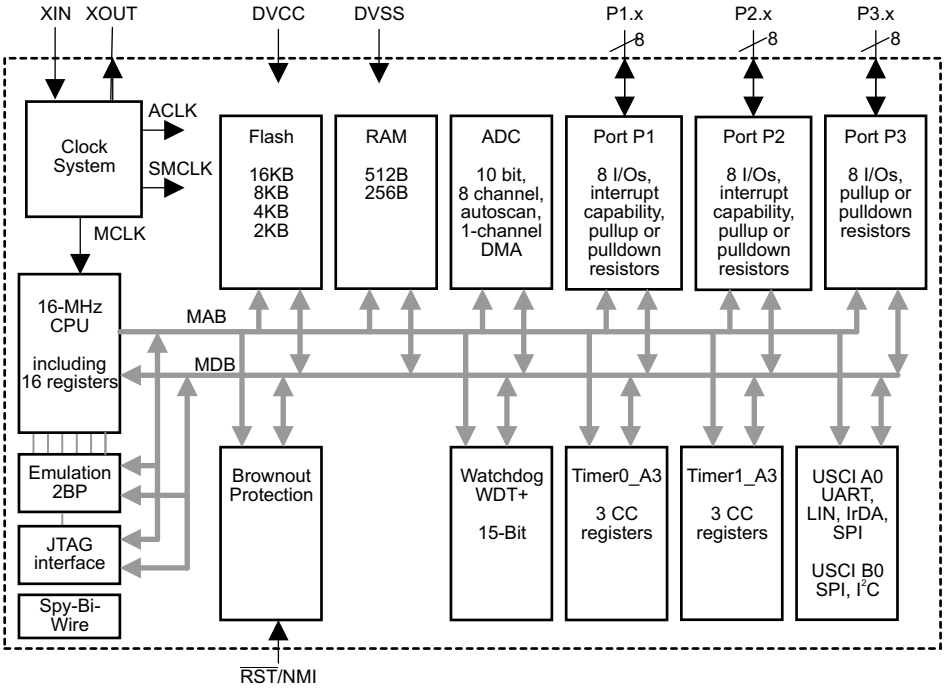

Copyright © 2016, Texas Instruments Incorporated

NOTE: Port P3 is available on 28-pin and 32-pin devices only.

Figure 1-1. Functional Block Diagram, MSP430G2x33

Copyright © 2011–2016, Texas Instruments Incorporated

Figure 1-2 shows the functional block diagram of the MSP430G2x03 MCUs.

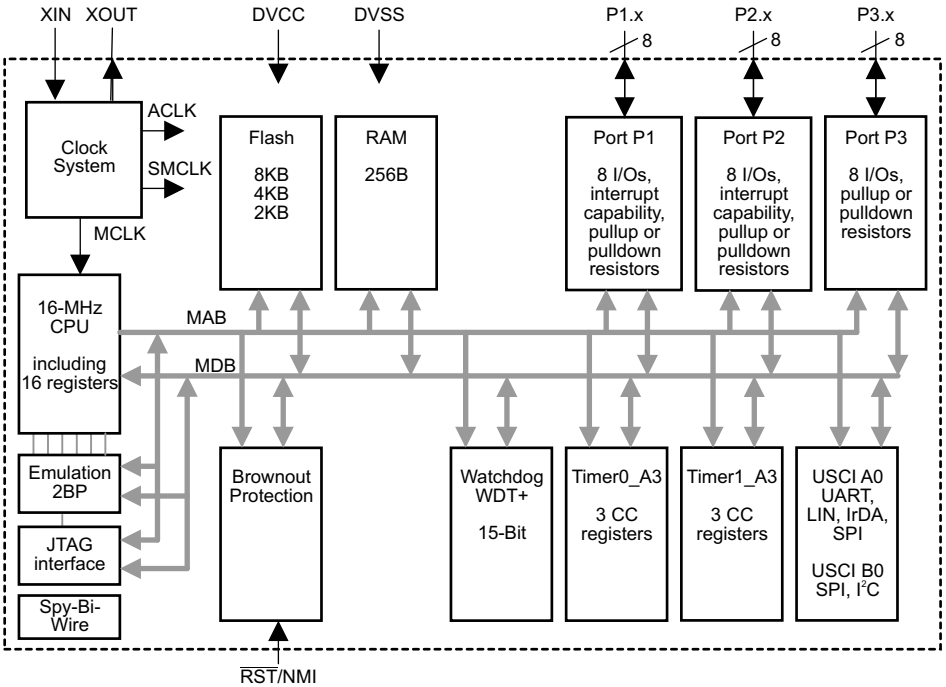

Copyright © 2016, Texas Instruments Incorporated

NOTE: Port P3 is available on 28-pin and 32-pin devices only.

Figure 1-2. Functional Block Diagram, MSP430G2x03

Table of Contents

1 Device Overview **1**
1.1 Features 1
1.2 Applications 1
1.3 Description 1
1.4 Functional Block Diagrams 2
2 Revision History **5**
3 Device Comparison **6**
3.1 Related Products 7
4 Terminal Configuration and Functions **8**
4.1 Pin Diagrams 8
4.2 Signal Descriptions 10
5 Specifications **13**
5.1 Absolute Maximum Ratings 13
5.2 ESD Ratings 13
5.3 Recommended Operating Conditions 13
5.4 Active Mode Supply Current Into V_{CC} Excluding External Current 14
5.5 Typical Characteristics, Active Mode Supply Current (Into V_{CC}) 15
5.6 Low-Power Mode Supply Currents (Into V_{CC}) Excluding External Current 16
5.7 Typical Characteristics, Low-Power Mode Supply Currents 17
5.8 Thermal Resistance Characteristics 18
5.9 Schmitt-Trigger Inputs, Ports Px 19
5.10 Leakage Current, Ports Px 19
5.11 Outputs, Ports Px 19
5.12 Output Frequency, Ports Px 19
5.13 Typical Characteristics – Outputs 20
5.14 Pin-Oscillator Frequency – Ports Px 21
5.15 Typical Characteristics – Pin-Oscillator Frequency 21
5.16 POR, BOR 22
5.17 Main DCO Characteristics 24
5.18 DCO Frequency 24
5.19 Calibrated DCO Frequencies, Tolerance 25
5.20 Wake-up Times From Lower-Power Modes (LPM3, LPM4) 26
5.21 Typical Characteristics, DCO Clock Wake-up Time From LPM3 or LPM4 26
5.22 Crystal Oscillator, XT1, Low-Frequency Mode 27
5.23 Internal Very-Low-Power Low-Frequency Oscillator (VLO) 27
5.24 Timer_A 27
5.25 USCI (UART Mode) 28
5.26 USCI (SPI Master Mode) 28
5.27 USCI (SPI Slave Mode) 29
5.28 USCI (I^2C Mode) 30
5.29 10-Bit ADC, Power Supply and Input Range Conditions (MSP430G2x33 Only) 31
5.30 10-Bit ADC, Built-In Voltage Reference (MSP430G2x33 Only) 32
5.31 10-Bit ADC, External Reference (MSP430G2x33 Only) 33
5.32 10-Bit ADC, Timing Parameters (MSP430G2x33 Only) 33
5.33 10-Bit ADC, Linearity Parameters (MSP430G2x33 Only) 33
5.34 10-Bit ADC, Temperature Sensor and Built-In V_{MID} (MSP430G2x33 Only) 34
5.35 Flash Memory 34
5.36 RAM 35
5.37 JTAG and Spy-Bi-Wire Interface 35
5.38 JTAG Fuse 35
6 Detailed Description **36**
6.1 CPU 36
6.2 Instruction Set 37
6.3 Operating Modes 38
6.4 Interrupt Vector Addresses 39
6.5 Special Function Registers (SFRs) 40
6.6 Memory Organization 41
6.7 Bootloader (BSL) 41
6.8 Flash Memory 42
6.9 Peripherals 42
6.10 I/O Port Diagrams 48
7 Device and Documentation Support **64**
7.1 Getting Started and Next Steps 64
7.2 Device Nomenclature 64
7.3 Tools and Software 66
7.4 Documentation Support 68
7.5 Related Links 70
7.6 Community Resources 71
7.7 Trademarks 71
7.8 Electrostatic Discharge Caution 71
7.9 Glossary 71
8 Mechanical, Packaging, and Orderable Information **72**

Copyright © 2011–2016, Texas Instruments Incorporated

2 Revision History

NOTE: Page numbers for previous revisions may differ from page numbers in the current version.

Changes from May 2, 2013 to April 27, 2016	Page
• Document format and organization changes throughout, including addition of section numbering	1
• Added *Device Information* table	2
• Added Section 3.1, *Related Products*	7
• Moved Section 5, *Specifications*	13
• Added Section 5.2, *ESD Ratings*	13
• Added Section 5.8, *Thermal Resistance Characteristics*	18
• Throughout document, changed all instances of "bootstrap loader" to "bootloader"	39
• Changed all instances of "INCHx = 0x1010" to "INCHx = 1010b" in Table 6-11, *Labels Used by the ADC Calibration Tags*	43
• Moved and renamed Section 6.10, *I/O Port Diagrams*	48
• Added notes to UCB0STE and UCA0CLK in Table 6-18	53
• Added notes to UCB0CLK and UCA0STE in Table 6-19	55
• Added "and PW28" to title of Section 6.10.8	62
• Added "and PW28" to title of Table 6-23	63
• Added Section 7, *Device and Documentation Support*	64
• Added Section 8, *Mechanical, Packaging, and Orderable Information*	72

3 Device Comparison

Table 3-1 compares the available family members.

Table 3-1. Device Comparison[(1)(2)]

DEVICE	BSL	EEM	FLASH (KB)	RAM (B)	Timer_A	ADC10 CHANNELS	USCI_A0, USCI_B0	CLOCK	I/O	PACKAGE
MSP430G2533	1	1	16	512	2x TA3	8	1	LF, DCO, VLO	24	32-QFN
									24	28-TSSOP
									16	20-TSSOP
									16	20-PDIP
MSP430G2433	1	1	8	512	2x TA3	8	1	LF, DCO, VLO	24	32-QFN
									24	28-TSSOP
									16	20-TSSOP
									16	20-PDIP
MSP430G2333	1	1	4	256	2x TA3	8	1	LF, DCO, VLO	24	32-QFN
									24	28-TSSOP
									16	20-TSSOP
									16	20-PDIP
MSP430G2233	1	1	2	256	2x TA3	8	1	LF, DCO, VLO	24	32-QFN
									24	28-TSSOP
									16	20-TSSOP
									16	20-PDIP
MSP430G2403	1	1	8	512	2x TA3	–	1	LF, DCO, VLO	24	32-QFN
									24	28-TSSOP
									16	20-TSSOP
									16	20-PDIP
MSP430G2303	1	1	4	256	2x TA3	–	1	LF, DCO, VLO	24	32-QFN
									24	28-TSSOP
									16	20-TSSOP
									16	20-PDIP
MSP430G2203	1	1	2	256	2x TA3	–	1	LF, DCO, VLO	24	32-QFN
									24	28-TSSOP
									16	20-TSSOP
									16	20-PDIP

(1) For the most current device, package, and ordering information, see the *Package Option Addendum* in Section 8, or see the TI website at www.ti.com.
(2) Package drawings, thermal data, and symbolization are available at www.ti.com/packaging.

Copyright © 2011–2016, Texas Instruments Incorporated

3.1 Related Products

For information about other devices in this family of products or related products, see the following links.

Products for MSP 16-Bit and 32-Bit MCUs Low-power mixed-signal processors with smart analog and digital peripherals for a wide range of industrial and consumer applications.

Products for Ultra-low Power MCUs MSP Ultra-Low-Power microcontrollers (MCUs) from Texas Instruments (TI) offer the lowest power consumption and the perfect mix of integrated peripherals for a wide range of low-power and portable applications.

Products for MSP430G2x/i2x Low-Cost Industrial MCUs MSP430G2x microcontrollers (MCUs) from the MSP ultra-low-power MCU series, offers the low power and performance of 16-bit MSP microcontrollers with a feature set targeted at cost sensitive applications.

Companion Products for MSP430G2533 Review products that are frequently purchased or used in conjunction with this product.

Reference Designs for MSP430G2533 TI Designs Reference Design Library is a robust reference design library that spans analog, embedded processor, and connectivity. Created by TI experts to help you jump start your system design, all TI Designs include schematic or block diagrams, BOMs, and design files to speed your time to market. Search and download designs at ti.com/tidesigns.

4 Terminal Configuration and Functions

4.1 Pin Diagrams

Figure 4-1 shows the pinout for the MSP430G2x03 and MSP430G2x33 devices in the 20-pin N or PW package.

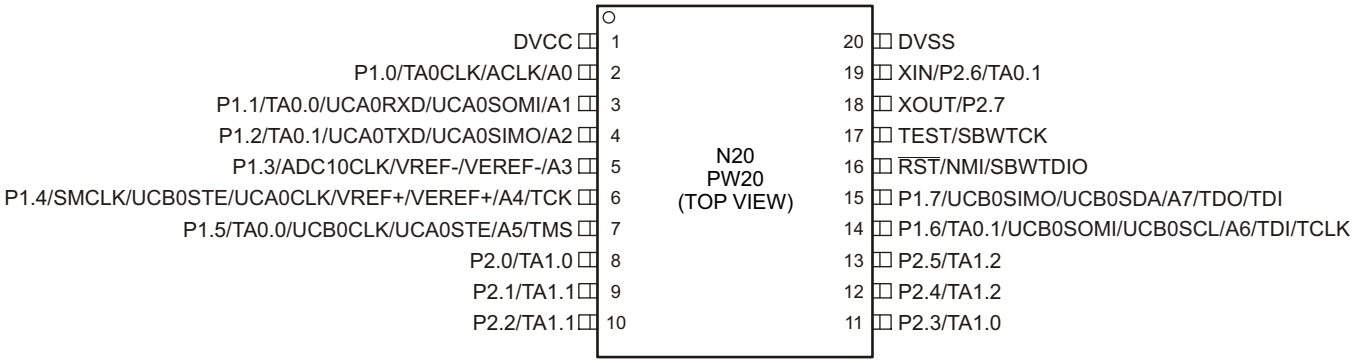

NOTE: ADC10 is available on MSP430G2x33 devices only.
NOTE: The pulldown resistors of port P3 should be enabled by setting P3REN.x = 1.

Figure 4-1. 20-Pin N or PW Package (Top View), MSP430G2x03 and MSP430G2x33

Figure 4-2 shows the pinout for the MSP430G2x03 and MSP430G2x33 devices in the 28-pin PW package.

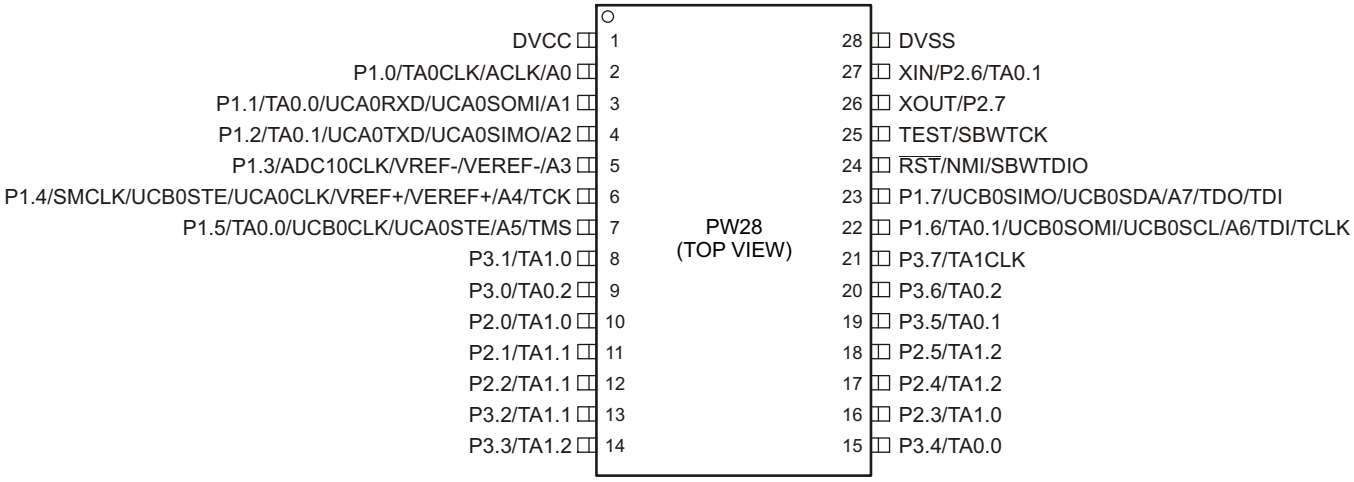

NOTE: ADC10 is available on MSP430G2x33 devices only.

Figure 4-2. 28-Pin PW Package (Top View), MSP430G2x03 and MSP430G2x33

Copyright © 2011–2016, Texas Instruments Incorporated

Figure 4-3 shows the pinout for the MSP430G2x03 and MSP430G2x33 devices in the 32-pin RHB package.

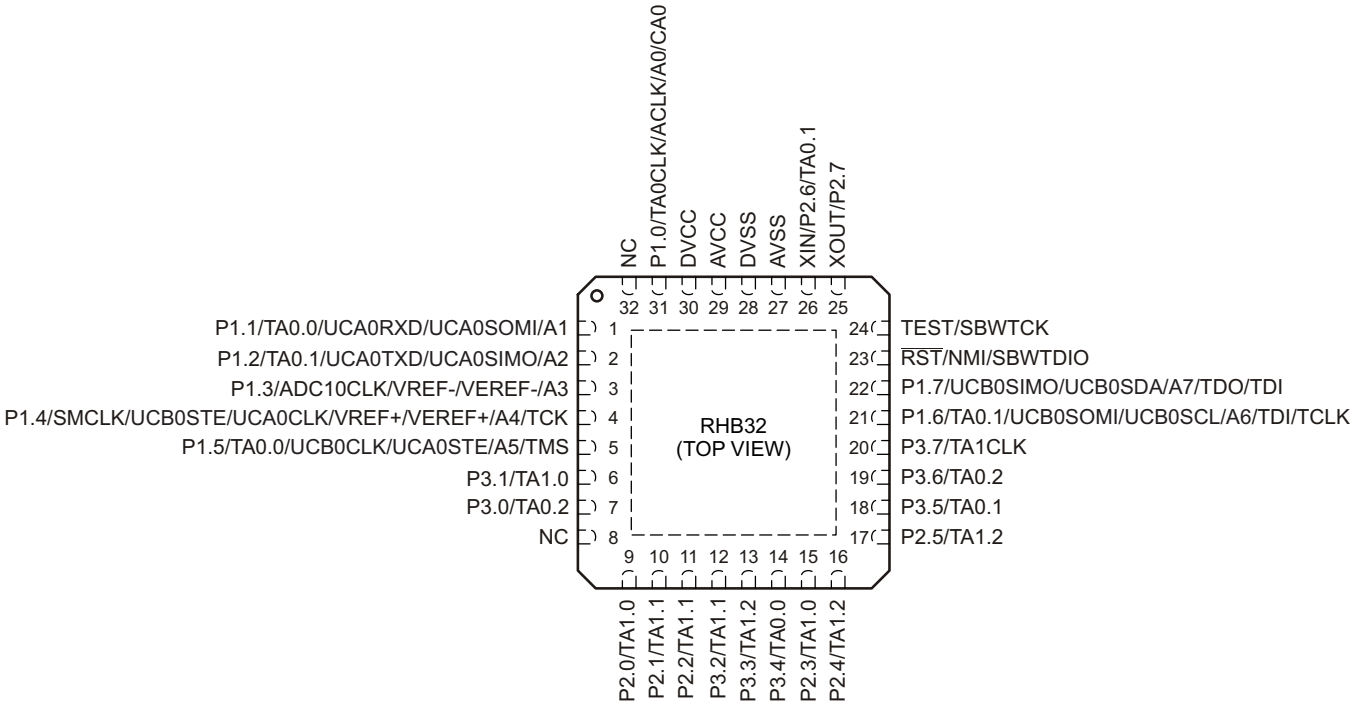

NOTE: ADC10 is available on MSP430G2x33 devices only.

Figure 4-3. 32-Pin RHB Package (Top View), MSP430G2x03 and MSP430G2x33

4.2 Signal Descriptions

Table 4-1 describes the signals.

Table 4-1. Terminal Functions

TERMINAL				I/O	DESCRIPTION
NAME	NO.				
	PW20, N20	PW28	RHB32		
P1.0/ TA0CLK/ ACLK/ A0	2	2	31	I/O	General-purpose digital I/O pin Timer0_A, clock signal TACLK input ACLK signal output ADC10 analog input A0 (1)
P1.1/ TA0.0/ UCA0RXD/ UCA0SOMI/ A1	3	3	1	I/O	General-purpose digital I/O pin Timer0_A, capture: CCI0A input, compare: Out0 output / BSL transmit USCI_A0 receive data input in UART mode USCI_A0 slave data out/master in SPI mode ADC10 analog input A1 (1)
P1.2/ TA0.1/ UCA0TXD/ UCA0SIMO/ A2	4	4	2	I/O	General-purpose digital I/O pin Timer0_A, capture: CCI1A input, compare: Out1 output USCI_A0 transmit data output in UART mode USCI_A0 slave data in/master out in SPI mode ADC10 analog input A2 (1)
P1.3/ ADC10CLK/ A3/ VREF-/VEREF-	5	5	3	I/O	General-purpose digital I/O pin ADC10, conversion clock output (1) ADC10 analog input A3 (1) ADC10 negative reference voltage (1)
P1.4/ SMCLK/ UCB0STE/ UCA0CLK/ A4/ VREF+/VEREF+ TCK	6	6	4	I/O	General-purpose digital I/O pin SMCLK signal output USCI_B0 slave transmit enable USCI_A0 clock input/output ADC10 analog input A4 (1) ADC10 positive reference voltage (1) JTAG test clock, input terminal for device programming and test
P1.5/ TA0.0/ UCB0CLK/ UCA0STE/ A5/ TMS	7	7	5	I/O	General-purpose digital I/O pin Timer0_A, compare: Out0 output / BSL receive USCI_B0 clock input/output USCI_A0 slave transmit enable ADC10 analog input A5 (1) JTAG test mode select, input terminal for device programming and test
P1.6/ TA0.1/ A6/ UCB0SOMI/ UCB0SCL/ TDI/TCLK	14	22	21	I/O	General-purpose digital I/O pin Timer0_A, compare: Out1 output ADC10 analog input A6 (1) USCI_B0 slave out/master in SPI mode, USCI_B0 SCL I^2C clock in I^2C mode JTAG test data input or test clock input during programming and test

(1) MSP430G2x33 devices only

Copyright © 2011–2016, Texas Instruments Incorporated

Table 4-1. Terminal Functions (continued)

TERMINAL				I/O	DESCRIPTION
NAME	NO.				
	PW20, N20	PW28	RHB32		
P1.7/ A7/ UCB0SIMO/ UCB0SDA/ TDO/TDI	15	23	22	I/O	General-purpose digital I/O pin ADC10 analog input A7 (1) USCI_B0 slave in/master out in SPI mode USCI_B0 SDA I^2C data in I^2C mode JTAG test data output terminal or test data input during programming and test (2)
P2.0/ TA1.0	8	10	9	I/O	General-purpose digital I/O pin Timer1_A, capture: CCI0A input, compare: Out0 output
P2.1/ TA1.1	9	11	10	I/O	General-purpose digital I/O pin Timer1_A, capture: CCI1A input, compare: Out1 output
P2.2/ TA1.1	10	12	11	I/O	General-purpose digital I/O pin Timer1_A, capture: CCI1B input, compare: Out1 output
P2.3/ TA1.0	11	16	15	I/O	General-purpose digital I/O pin Timer1_A, capture: CCI0B input, compare: Out0 output
P2.4/ TA1.2	12	17	16	I/O	General-purpose digital I/O pin Timer1_A, capture: CCI2A input, compare: Out2 output
P2.5/ TA1.2	13	18	17	I/O	General-purpose digital I/O pin Timer1_A, capture: CCI2B input, compare: Out2 output
XIN/ P2.6/ TA0.1	19	27	26	I/O	Input terminal of crystal oscillator General-purpose digital I/O pin Timer0_A, compare: Out1 output
XOUT/ P2.7	18	26	25	I/O	Output terminal of crystal oscillator (3) General-purpose digital I/O pin
P3.0/ TA0.2	-	9	7	I/O	General-purpose digital I/O pin Timer0_A, capture: CCI2A input, compare: Out2 output
P3.1/ TA1.0	-	8	6	I/O	General-purpose digital I/O pin Timer1_A, compare: Out0 output
P3.2/ TA1.1	-	13	12	I/O	General-purpose digital I/O pin Timer1_A, compare: Out1 output
P3.3/ TA1.2	-	14	13	I/O	General-purpose digital I/O Timer1_A, compare: Out2 output
P3.4/ TA0.0	-	15	14	I/O	General-purpose digital I/O Timer0_A, compare: Out0 output
P3.5/ TA0.1	-	19	18	I/O	General-purpose digital I/O Timer0_A, compare: Out1 output
P3.6/ TA0.2	-	20	19	I/O	General-purpose digital I/O Timer0_A, compare: Out2 output
P3.7/ TA1CLK	-	21	20	I/O	General-purpose digital I/O Timer1_A, clock signal TACLK input
$\overline{\text{RST}}$/ NMI/ SBWTDIO	16	24	23	I	Reset Nonmaskable interrupt input Spy-Bi-Wire test data input/output during programming and test

(2) TDO or TDI is selected by JTAG instruction.
(3) If XOUT/P2.7 is used as an input, excess current flows until P2SEL.7 is cleared. This is due to the oscillator output driver connection to this pad after reset.

Copyright © 2011–2016, Texas Instruments Incorporated

Table 4-1. Terminal Functions (continued)

TERMINAL				I/O	DESCRIPTION
NAME	NO.				
	PW20, N20	PW28	RHB32		
TEST/ SBWTCK	17	25	24	I	Selects test mode for JTAG pins on Port 1. The device protection fuse is connected to TEST. Spy-Bi-Wire test clock input during programming and test
AVCC	NA	NA	29	NA	Analog supply voltage
DVCC	1	1	30	NA	Digital supply voltage
DVSS	20	28	27, 28	NA	Ground reference
NC	NA	NA	8, 32	NA	Not connected
QFN Pad	NA	NA	Pad	NA	QFN package pad connection to VSS recommended.

Copyright © 2011–2016, Texas Instruments Incorporated

5 Specifications

5.1 Absolute Maximum Ratings[(1)]

over operating free-air temperature range (unless otherwise noted)

		MIN	MAX	UNIT
Voltage applied at V_{CC} to V_{SS}		–0.3	4.1	V
Voltage applied to any pin[(2)]		–0.3	V_{CC} + 0.3	V
Diode current at any device pin			±2	mA
Storage temperature, T_{stg}[(3)]	Unprogrammed device	–55	150	°C
	Programmed device	–55	150	

(1) Stresses beyond those listed under *Absolute Maximum Ratings* may cause permanent damage to the device. These are stress ratings only, and functional operation of the device at these or any other conditions beyond those indicated under *Recommended Operating Conditions* is not implied. Exposure to absolute-maximum-rated conditions for extended periods may affect device reliability.
(2) All voltages referenced to V_{SS}. The JTAG fuse-blow voltage, V_{FB}, is allowed to exceed the absolute maximum rating. The voltage is applied to the TEST pin when blowing the JTAG fuse.
(3) Higher temperature may be applied during board soldering according to the current JEDEC J-STD-020 specification with peak reflow temperatures not higher than classified on the device label on the shipping boxes or reels.

5.2 ESD Ratings

			VALUE	UNIT
$V_{(ESD)}$	Electrostatic discharge	Human-body model (HBM), per ANSI/ESDA/JEDEC JS-001[(1)]	±1000	V
		Charged-device model (CDM), per JEDEC specification JESD22-C101[(2)]	±250	

(1) JEDEC document JEP155 states that 500-V HBM allows safe manufacturing with a standard ESD control process. Pins listed as ±1000 V may actually have higher performance.
(2) JEDEC document JEP157 states that 250-V CDM allows safe manufacturing with a standard ESD control process. Pins listed as ±250 V may actually have higher performance.

5.3 Recommended Operating Conditions

Typical values are specified at V_{CC} = 3.3 V and T_A = 25°C (unless otherwise noted)

			MIN	NOM	MAX	UNIT
V_{CC}	Supply voltage	During program execution	1.8		3.6	V
		During flash programming or erase	2.2		3.6	
V_{SS}	Supply voltage			0		V
T_A	Operating free-air temperature		–40		85	°C
f_{SYSTEM}	Processor frequency (maximum MCLK frequency using the USART module)[(1)(2)]	V_{CC} = 1.8 V, Duty cycle = 50% ±10%	DC		6	MHz
		V_{CC} = 2.7 V, Duty cycle = 50% ±10%	DC		12	
		V_{CC} = 3.3 V, Duty cycle = 50% ±10%	DC		16	

(1) The MSP430 CPU is clocked directly with MCLK. Both the high and low phases of MCLK must not exceed the pulse duration of the specified maximum frequency.
(2) Modules might have a different maximum input clock specification. See the specification of the respective module in this data sheet.

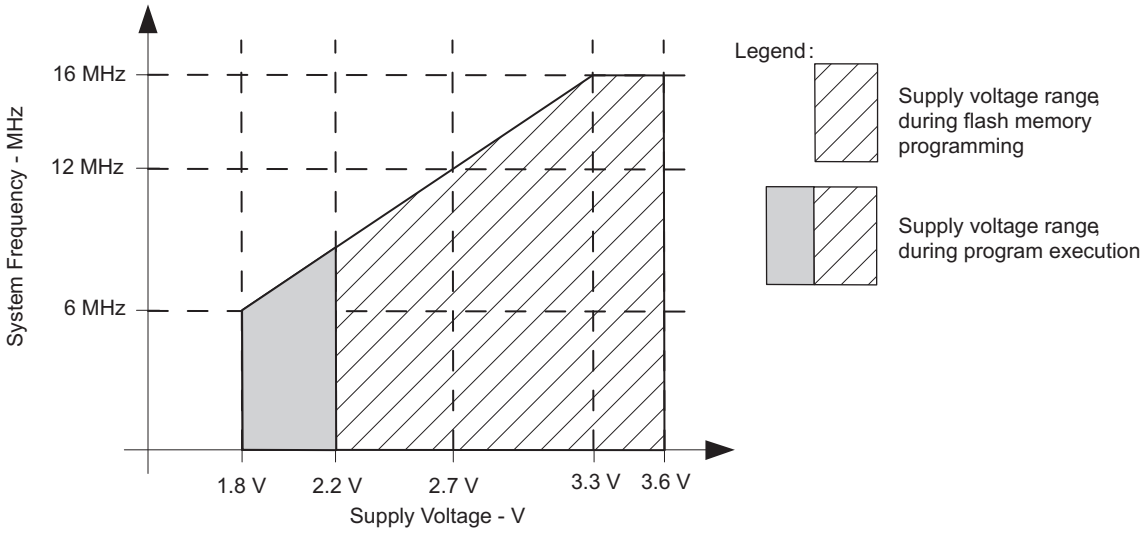

Note: Minimum processor frequency is defined by system clock. Flash program or erase operations require a minimum V_{CC} of 2.2 V.

Figure 5-1. Safe Operating Area

5.4 Active Mode Supply Current Into V_{CC} Excluding External Current

over recommended ranges of supply voltage and operating free-air temperature (unless otherwise noted)[(1)(2)]

PARAMETER		TEST CONDITIONS	V_{CC}	MIN	TYP	MAX	UNIT
$I_{AM,1MHz}$	Active mode (AM) current at 1 MHz	$f_{DCO} = f_{MCLK} = f_{SMCLK} = 1$ MHz, $f_{ACLK} = 0$ Hz, Program executes in flash, BCSCTL1 = CALBC1_1MHZ, DCOCTL = CALDCO_1MHZ, CPUOFF = 0, SCG0 = 0, SCG1 = 0, OSCOFF = 0	2.2 V		230		µA
			3 V		330	420	

(1) All inputs are tied to 0 V or to V_{CC}. Outputs do not source or sink any current.
(2) The currents are characterized with a Micro Crystal CC4V-T1A SMD crystal with a load capacitance of 9 pF. The internal and external load capacitance is chosen to closely match the required 9 pF.

Copyright © 2011–2016, Texas Instruments Incorporated

5.5 Typical Characteristics, Active Mode Supply Current (Into V_{CC})

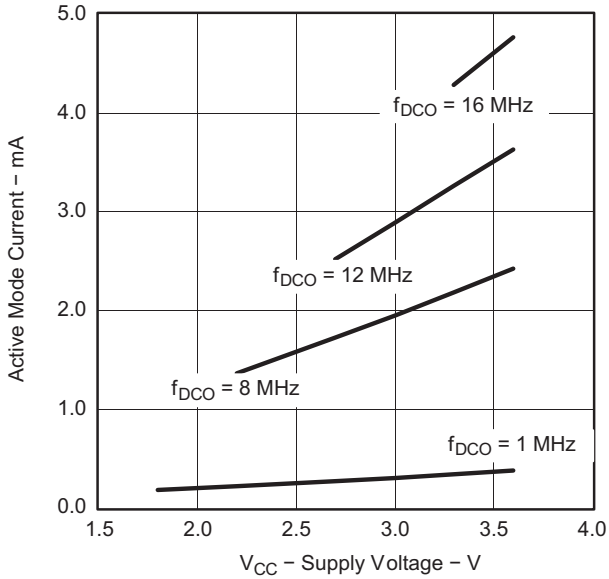

Figure 5-2. Active Mode Current vs V_{CC}, T_A = 25°C

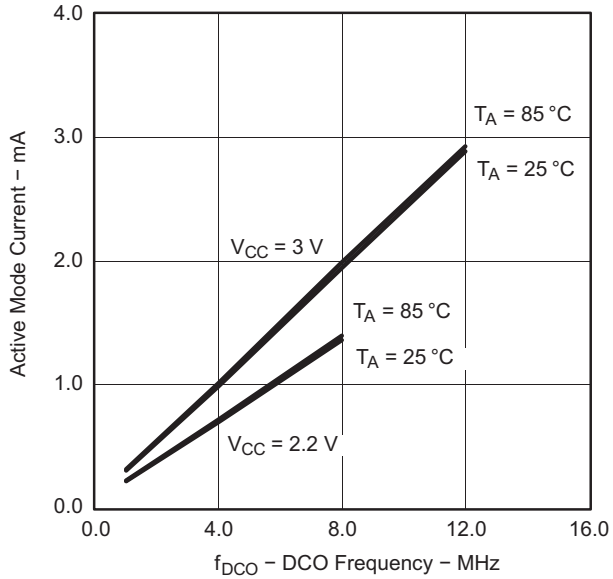

Figure 5-3. Active Mode Current vs DCO Frequency

5.6 Low-Power Mode Supply Currents (Into V_{CC}) Excluding External Current

over recommended ranges of supply voltage and operating free-air temperature (unless otherwise noted)(1) (2)

PARAMETER		TEST CONDITIONS	T_A	V_{CC}	MIN	TYP	MAX	UNIT
$I_{LPM0,1MHz}$	Low-power mode 0 (LPM0) current(3)	f_{MCLK} = 0 MHz, f_{SMCLK} = f_{DCO} = 1 MHz, f_{ACLK} = 32768 Hz, BCSCTL1 = CALBC1_1MHZ, DCOCTL = CALDCO_1MHZ, CPUOFF = 1, SCG0 = 0, SCG1 = 0, OSCOFF = 0	25°C	2.2 V		56		µA
I_{LPM2}	Low-power mode 2 (LPM2) current(4)	f_{MCLK} = f_{SMCLK} = 0 MHz, f_{DCO} = 1 MHz, f_{ACLK} = 32768 Hz, BCSCTL1 = CALBC1_1MHZ, DCOCTL = CALDCO_1MHZ, CPUOFF = 1, SCG0 = 0, SCG1 = 1, OSCOFF = 0	25°C	2.2 V		22		µA
$I_{LPM3,LFXT1}$	Low-power mode 3 (LPM3) current(4)	f_{DCO} = f_{MCLK} = f_{SMCLK} = 0 MHz, f_{ACLK} = 32768 Hz, CPUOFF = 1, SCG0 = 1, SCG1 = 1, OSCOFF = 0	25°C	2.2 V		0.7	1.5	µA
$I_{LPM3,VLO}$	Low-power mode 3 current, (LPM3)(4)	f_{DCO} = f_{MCLK} = f_{SMCLK} = 0 MHz, f_{ACLK} from internal LF oscillator (VLO), CPUOFF = 1, SCG0 = 1, SCG1 = 1, OSCOFF = 0	25°C	2.2 V		0.5	0.7	µA
I_{LPM4}	Low-power mode 4 (LPM4) current(5)	f_{DCO} = f_{MCLK} = f_{SMCLK} = 0 MHz, f_{ACLK} = 0 Hz, CPUOFF = 1, SCG0 = 1, SCG1 = 1, OSCOFF = 1	25°C	2.2 V		0.1	0.5	µA
			85°C			0.8	1.7	

(1) All inputs are tied to 0 V or to V_{CC}. Outputs do not source or sink any current.
(2) The currents are characterized with a Micro Crystal CC4V-T1A SMD crystal with a load capacitance of 9 pF. The internal and external load capacitance is chosen to closely match the required 9 pF.
(3) Current for brownout and WDT clocked by SMCLK included.
(4) Current for brownout and WDT clocked by ACLK included.
(5) Current for brownout included.

Copyright © 2011–2016, Texas Instruments Incorporated

5.7 Typical Characteristics, Low-Power Mode Supply Currents

over recommended ranges of supply voltage and operating free-air temperature (unless otherwise noted)

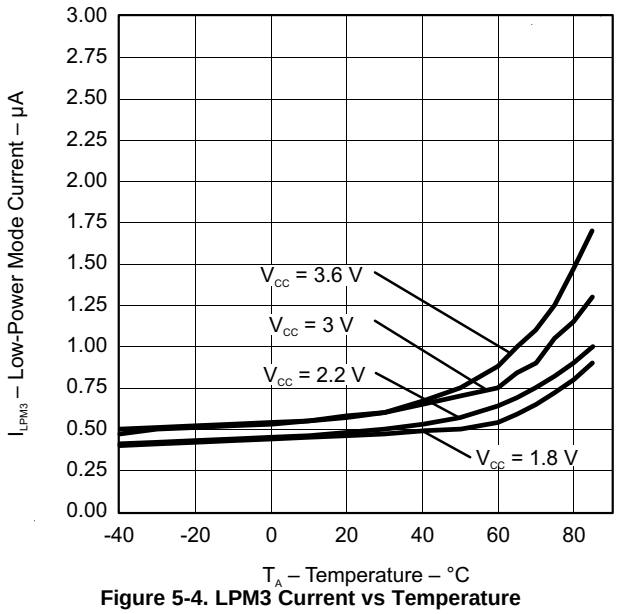

Figure 5-4. LPM3 Current vs Temperature

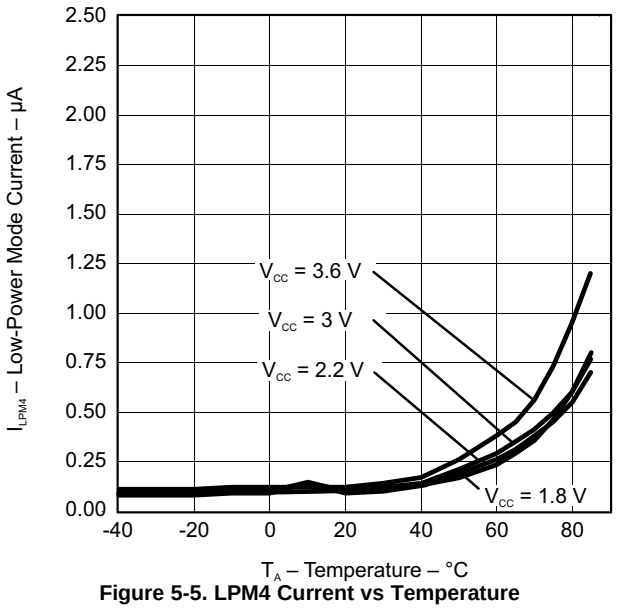

Figure 5-5. LPM4 Current vs Temperature

5.8 Thermal Resistance Characteristics

PARAMETER			VALUE (1)	UNIT
$R\theta_{JA}$	Junction-to-ambient thermal resistance, still air (2)	VQFN (RHB-32)	32.1	°C/W
		TSSOP (PW-28)	72.2	
		TSSOP (PW-20)	86.5	
		PDIP (N-20)	49.3	
$R\theta_{JC(TOP)}$	Junction-to-case (top) thermal resistance (3)	VQFN (RHB-32)	22.3	°C/W
		TSSOP (PW-28)	18.3	
		TSSOP (PW-20)	20.8	
		PDIP (N-20)	41	
$R\theta_{JC(BOTTOM)}$	Junction-to-case (bottom) thermal resistance	VQFN (RHB-32)	1.4	°C/W
		TSSOP (PW-28)	N/A	
		TSSOP (PW-20)	N/A	
		PDIP (N-20)	N/A	
θ_{JB}	Junction-to-board thermal resistance (4)	VQFN (RHB-32)	6.1	°C/W
		TSSOP (PW-28)	30.4	
		TSSOP (PW-20)	39	
		PDIP (N-20)	30.2	
Ψ_{JT}	Junction-to-package-top characterization parameter	VQFN (RHB-32)	0.3	°C/W
		TSSOP (PW-28)	0.7	
		TSSOP (PW-20)	0.8	
		PDIP (N-20)	18.1	
Ψ_{JB}	Junction-to-board characterization parameter	VQFN (RHB-32)	6.1	°C/W
		TSSOP (PW-28)	29.9	
		TSSOP (PW-20)	38.1	
		PDIP (N-20)	30.1	

(1) These values are based on a JEDEC-defined 2S2P system (with the exception of the Theta JC ($R\theta_{JC}$) value, which is based on a JEDEC-defined 1S0P system) and will change based on environment and application. For more information, see these EIA/JEDEC standards:
- JESD51-2, *Integrated Circuits Thermal Test Method Environmental Conditions - Natural Convection (Still Air)*
- JESD51-3, *Low Effective Thermal Conductivity Test Board for Leaded Surface Mount Packages*
- JESD51-7, *High Effective Thermal Conductivity Test Board for Leaded Surface Mount Packages*
- JESD51-9, *Test Boards for Area Array Surface Mount Package Thermal Measurements*

(2) The junction-to-ambient thermal resistance under natural convection is obtained in a simulation on a JEDEC-standard, High-K board, as specified in JESD51-7, in an environment described in JESD51-2a.

(3) The junction-to-case (top) thermal resistance is obtained by simulating a cold plate test on the package top. No specific JEDEC-standard test exists, but a close description can be found in the ANSI SEMI standard G30-88.

(4) The junction-to-board thermal resistance is obtained by simulating in an environment with a ring cold plate fixture to control the PCB temperature, as described in JESD51-8.

Copyright © 2011–2016, Texas Instruments Incorporated

5.9 Schmitt-Trigger Inputs, Ports Px

over recommended ranges of supply voltage and operating free-air temperature (unless otherwise noted)

PARAMETER		TEST CONDITIONS	V_{CC}	MIN	TYP	MAX	UNIT
V_{IT+}	Positive-going input threshold voltage			0.45 V_{CC}		0.75 V_{CC}	V
			3 V	1.35		2.25	
V_{IT-}	Negative-going input threshold voltage			0.25 V_{CC}		0.55 V_{CC}	V
			3 V	0.75		1.65	
V_{hys}	Input voltage hysteresis ($V_{IT+} – V_{IT-}$)		3 V	0.3		1	V
R_{Pull}	Pullup or pulldown resistor	For pullup: $V_{IN} = V_{SS}$ For pulldown: $V_{IN} = V_{CC}$	3 V	20	35	50	kΩ
C_I	Input capacitance	$V_{IN} = V_{SS}$ or V_{CC}			5		pF

5.10 Leakage Current, Ports Px

over recommended ranges of supply voltage and operating free-air temperature (unless otherwise noted)

PARAMETER		TEST CONDITIONS	V_{CC}	MIN	MAX	UNIT
$I_{lkg(Px.y)}$	High-impedance leakage current	See (1) (2)	3 V		±50	nA

(1) The leakage current is measured with V_{SS} or V_{CC} applied to the corresponding pins, unless otherwise noted.
(2) The leakage of the digital port pins is measured individually. The port pin is selected for input and the pullup/pulldown resistor is disabled.

5.11 Outputs, Ports Px

over recommended ranges of supply voltage and operating free-air temperature (unless otherwise noted)

PARAMETER		TEST CONDITIONS	V_{CC}	MIN	TYP	MAX	UNIT
V_{OH}	High-level output voltage	$I_{(OHmax)} = –6$ mA (1)	3 V		$V_{CC} – 0.3$		V
V_{OL}	Low-level output voltage	$I_{(OLmax)} = 6$ mA (1)	3 V		$V_{SS} + 0.3$		V

(1) The maximum total current, $I_{(OHmax)}$ and $I_{(OLmax)}$, for all outputs combined should not exceed ±48 mA to hold the maximum voltage drop specified.

5.12 Output Frequency, Ports Px

over recommended ranges of supply voltage and operating free-air temperature (unless otherwise noted)

PARAMETER		TEST CONDITIONS	V_{CC}	MIN	TYP	MAX	UNIT
$f_{Px.y}$	Port output frequency (with load)	Px.y, $C_L = 20$ pF, $R_L = 1$ kΩ (1) (2)	3 V		12		MHz
f_{Port_CLK}	Clock output frequency	Px.y, $C_L = 20$ pF (2)	3 V		16		MHz

(1) A resistive divider with two 50-kΩ resistors between V_{CC} and V_{SS} is used as load. The output is connected to the center tap of the divider.
(2) The output voltage reaches at least 10% and 90% V_{CC} at the specified toggle frequency.

5.13 Typical Characteristics – Outputs

over recommended ranges of supply voltage and operating free-air temperature (unless otherwise noted)

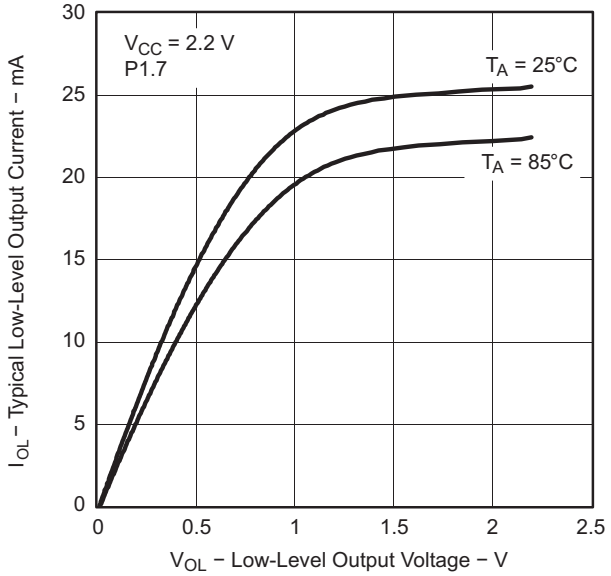

Figure 5-6. Typical Low-Level Output Current vs Low-Level Output Voltage

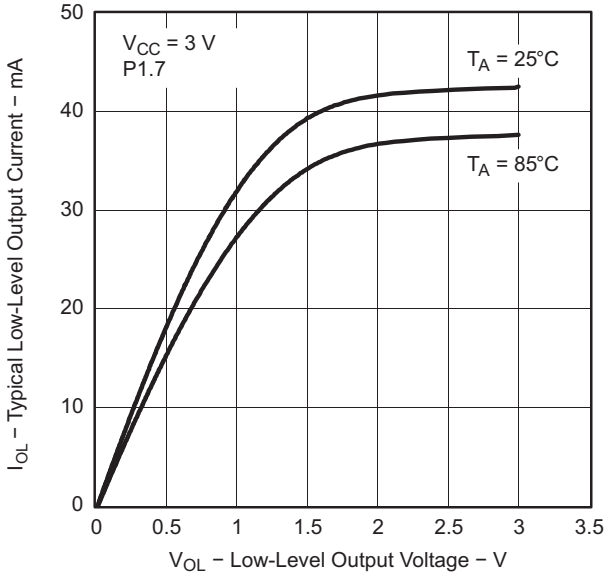

Figure 5-7. Typical Low-Level Output Current vs Low-Level Output Voltage

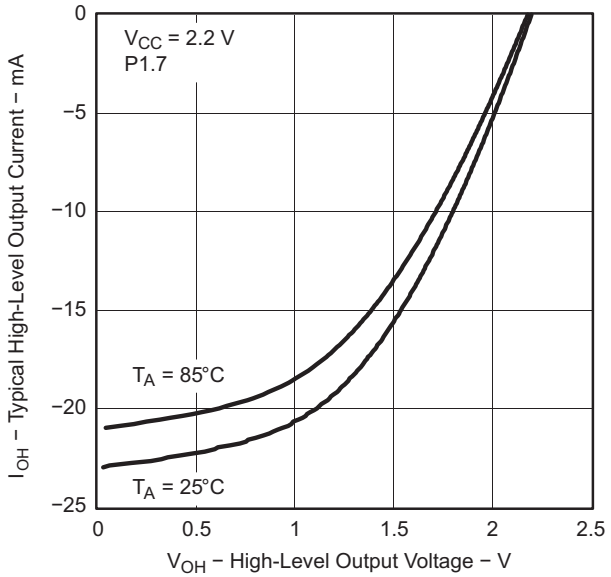

Figure 5-8. Typical High-Level Output Current vs High-Level Output Voltage

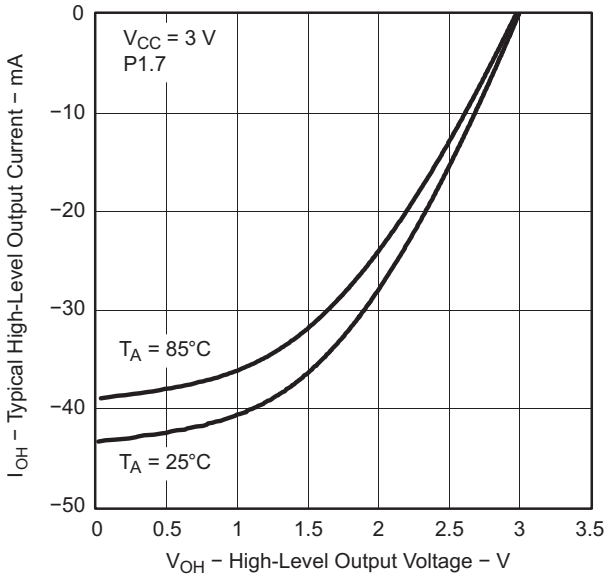

Figure 5-9. Typical High-Level Output Current vs High-Level Output Voltage

Copyright © 2011–2016, Texas Instruments Incorporated

5.14 Pin-Oscillator Frequency – Ports Px

over recommended ranges of supply voltage and operating free-air temperature (unless otherwise noted)

PARAMETER		TEST CONDITIONS	V_{CC}	MIN	TYP	MAX	UNIT
$fo_{P1.x}$	Port output oscillation frequency	P1.y, C_L = 10 pF, R_L = 100 kΩ (1)(2)	3 V		1400		kHz
		P1.y, C_L = 20 pF, R_L = 100 kΩ (1)(2)			900		
$fo_{P2.x}$	Port output oscillation frequency	P2.0 to P2.5, C_L = 10 pF, R_L = 100 kΩ (1)(2)	3 V		1800		kHz
		P2.0 to P2.5, C_L = 20 pF, R_L = 100 kΩ (1)(2)			1000		
$fo_{P2.6/7}$	Port output oscillation frequency	P2.6 and P2.7, C_L = 20 pF, R_L = 100 kΩ (1)(2)	3 V		700		kHz
$fo_{P3.x}$	Port output oscillation frequency	P3.y, C_L = 10 pF, R_L = 100 kΩ (1)(2)	3 V		1800		kHz
		P3.y, C_L = 20 pF, R_L = 100 kΩ (1)(2)			1000		

(1) A resistive divider with two 50-kΩ resistors between V_{CC} and V_{SS} is used as load. The output is connected to the center tap of the divider.
(2) The output voltage reaches at least 10% and 90% V_{CC} at the specified toggle frequency.

5.15 Typical Characteristics – Pin-Oscillator Frequency

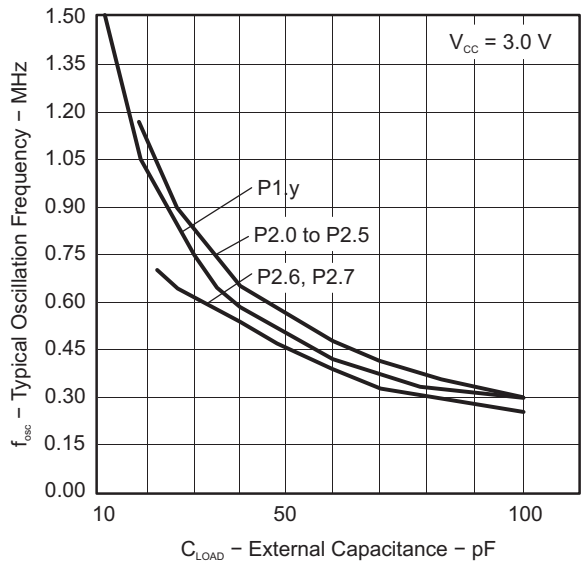

One output active at a time.

Figure 5-10. Typical Oscillating Frequency vs Load Capacitance

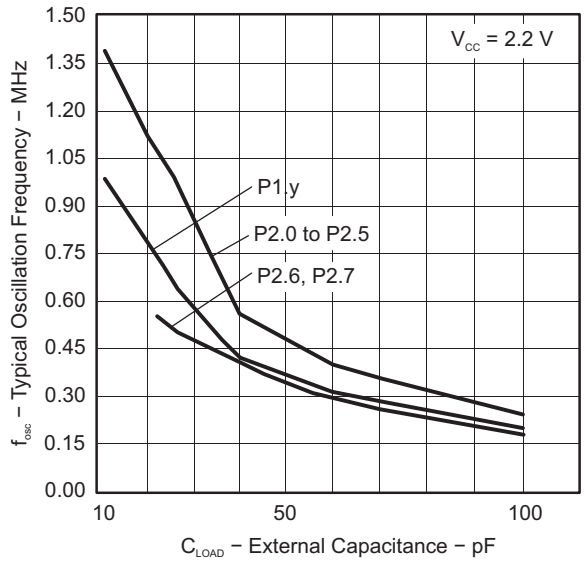

One output active at a time.

Figure 5-11. Typical Oscillating Frequency vs Load Capacitance

5.16 POR, BOR(1)(2)

over recommended ranges of supply voltage and operating free-air temperature (unless otherwise noted)

PARAMETER		TEST CONDITIONS	V_{CC}	MIN	TYP	MAX	UNIT
$V_{CC(start)}$	See Figure 5-12	$dV_{CC}/dt \le 3$ V/s			0.7 $V_{(B_IT-)}$		V
$V_{(B_IT-)}$	See Figure 5-12 through Figure 5-14	$dV_{CC}/dt \le 3$ V/s			1.35		V
$V_{hys(B_IT-)}$	See Figure 5-12	$dV_{CC}/dt \le 3$ V/s			140		mV
$t_{d(BOR)}$	See Figure 5-12				2000		µs
$t_{(reset)}$	Pulse duration needed at $\overline{RST}$/NMI pin to accepted reset internally		2.2 V	2			µs

(1) The current consumption of the brownout module is already included in the I_{CC} current consumption data. The voltage level $V_{(B_IT-)}$ + $V_{hys(B_IT-)}$ is ≤ 1.8 V.
(2) During power up, the CPU begins code execution following a period of $t_{d(BOR)}$ after $V_{CC} = V_{(B_IT-)} + V_{hys(B_IT-)}$. The default DCO settings must not be changed until $V_{CC} \ge V_{CC(min)}$, where $V_{CC(min)}$ is the minimum supply voltage for the desired operating frequency.

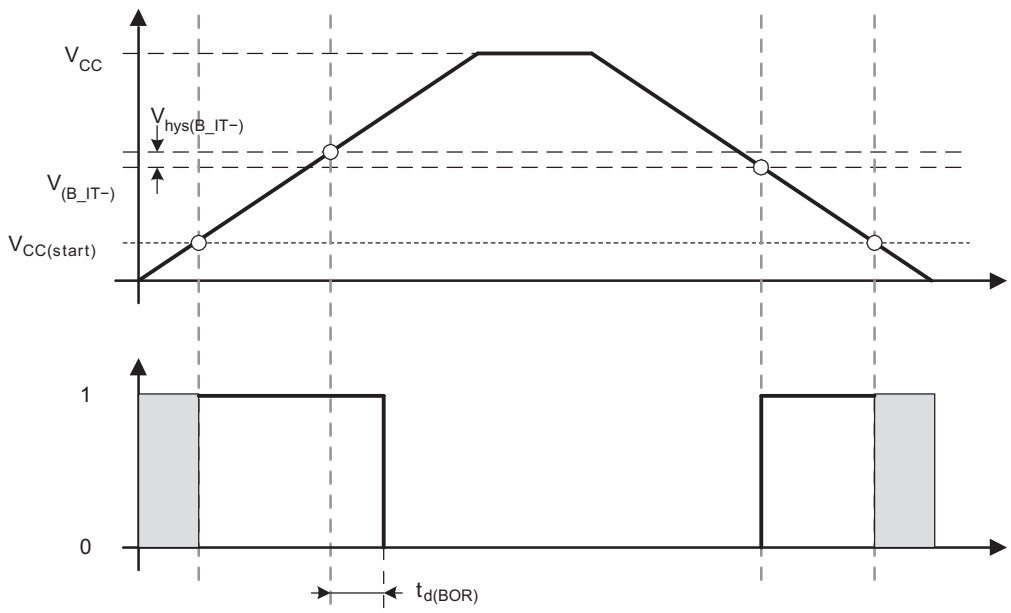

Figure 5-12. POR and BOR vs Supply Voltage

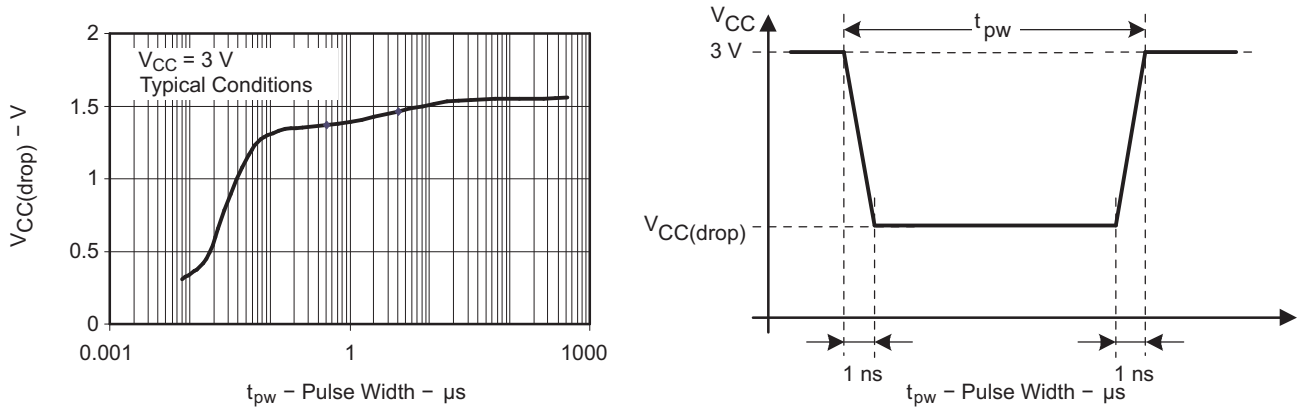

Figure 5-13. $V_{CC(drop)}$ Level With a Square Voltage Drop to Generate a POR or BOR Signal

Copyright © 2011–2016, Texas Instruments Incorporated

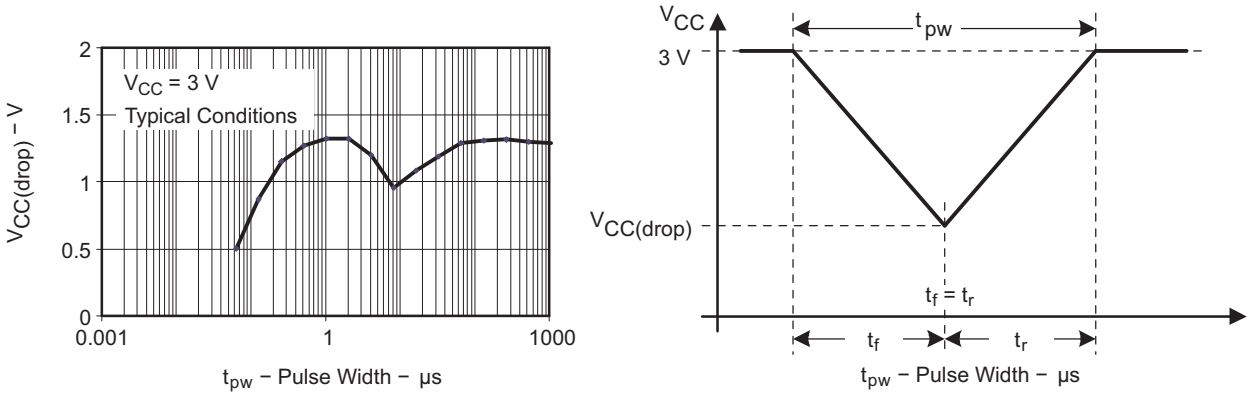

Figure 5-14. $V_{CC(drop)}$ Level With a Triangle Voltage Drop to Generate a POR or BOR Signal

5.17 Main DCO Characteristics

- All ranges selected by RSELx overlap with RSELx + 1: RSELx = 0 overlaps RSELx = 1, ... RSELx = 14 overlaps RSELx = 15.
- DCO control bits DCOx have a step size as defined by parameter S_{DCO}.
- Modulation control bits MODx select how often $f_{DCO(RSEL,DCO+1)}$ is used within the period of 32 DCOCLK cycles. The frequency $f_{DCO(RSEL,DCO)}$ is used for the remaining cycles. The frequency is an average equal to:

$$f_{average} = \frac{32 \times f_{DCO(RSEL,DCO)} \times f_{DCO(RSEL,DCO+1)}}{MOD \times f_{DCO(RSEL,DCO)} + (32 - MOD) \times f_{DCO(RSEL,DCO+1)}}$$

5.18 DCO Frequency

over recommended ranges of supply voltage and operating free-air temperature (unless otherwise noted)

PARAMETER		TEST CONDITIONS	V_{CC}	MIN	TYP	MAX	UNIT
V_{CC}	Supply voltage	RSELx < 14		1.8		3.6	V
		RSELx = 14		2.2		3.6	
		RSELx = 15		3		3.6	
$f_{DCO(0,0)}$	DCO frequency (0, 0)	RSELx = 0, DCOx = 0, MODx = 0	3 V	0.06		0.14	MHz
$f_{DCO(0,3)}$	DCO frequency (0, 3)	RSELx = 0, DCOx = 3, MODx = 0	3 V	0.07		0.17	MHz
$f_{DCO(1,3)}$	DCO frequency (1, 3)	RSELx = 1, DCOx = 3, MODx = 0	3 V		0.15		MHz
$f_{DCO(2,3)}$	DCO frequency (2, 3)	RSELx = 2, DCOx = 3, MODx = 0	3 V		0.21		MHz
$f_{DCO(3,3)}$	DCO frequency (3, 3)	RSELx = 3, DCOx = 3, MODx = 0	3 V		0.30		MHz
$f_{DCO(4,3)}$	DCO frequency (4, 3)	RSELx = 4, DCOx = 3, MODx = 0	3 V		0.41		MHz
$f_{DCO(5,3)}$	DCO frequency (5, 3)	RSELx = 5, DCOx = 3, MODx = 0	3 V		0.58		MHz
$f_{DCO(6,3)}$	DCO frequency (6, 3)	RSELx = 6, DCOx = 3, MODx = 0	3 V	0.54		1.06	MHz
$f_{DCO(7,3)}$	DCO frequency (7, 3)	RSELx = 7, DCOx = 3, MODx = 0	3 V	0.80		1.50	MHz
$f_{DCO(8,3)}$	DCO frequency (8, 3)	RSELx = 8, DCOx = 3, MODx = 0	3 V		1.6		MHz
$f_{DCO(9,3)}$	DCO frequency (9, 3)	RSELx = 9, DCOx = 3, MODx = 0	3 V		2.3		MHz
$f_{DCO(10,3)}$	DCO frequency (10, 3)	RSELx = 10, DCOx = 3, MODx = 0	3 V		3.4		MHz
$f_{DCO(11,3)}$	DCO frequency (11, 3)	RSELx = 11, DCOx = 3, MODx = 0	3 V		4.25		MHz
$f_{DCO(12,3)}$	DCO frequency (12, 3)	RSELx = 12, DCOx = 3, MODx = 0	3 V	4.30		7.30	MHz
$f_{DCO(13,3)}$	DCO frequency (13, 3)	RSELx = 13, DCOx = 3, MODx = 0	3 V	6.00		9.60	MHz
$f_{DCO(14,3)}$	DCO frequency (14, 3)	RSELx = 14, DCOx = 3, MODx = 0	3 V	8.60		13.9	MHz
$f_{DCO(15,3)}$	DCO frequency (15, 3)	RSELx = 15, DCOx = 3, MODx = 0	3 V	12.0		18.5	MHz
$f_{DCO(15,7)}$	DCO frequency (15, 7)	RSELx = 15, DCOx = 7, MODx = 0	3 V	16.0		26.0	MHz
S_{RSEL}	Frequency step between range RSEL and RSEL+1	$S_{RSEL} = f_{DCO(RSEL+1,DCO)}/f_{DCO(RSEL,DCO)}$	3 V		1.35		ratio
S_{DCO}	Frequency step between tap DCO and DCO+1	$S_{DCO} = f_{DCO(RSEL,DCO+1)}/f_{DCO(RSEL,DCO)}$	3 V		1.08		ratio
Duty cycle		Measured at SMCLK output	3 V		50%		

Copyright © 2011–2016, Texas Instruments Incorporated

5.19 Calibrated DCO Frequencies, Tolerance

over recommended ranges of supply voltage and operating free-air temperature (unless otherwise noted)

PARAMETER	TEST CONDITIONS	T_A	V_{CC}	MIN	TYP	MAX	UNIT
1-MHz tolerance over temperature(1)	BCSCTL1 = CALBC1_1MHZ, DCOCTL = CALDCO_1MHZ, calibrated at 30°C and 3 V	0°C to 85°C	3 V	–3%	±0.5%	+3%	
1-MHz tolerance over V_{CC}	BCSCTL1 = CALBC1_1MHZ, DCOCTL = CALDCO_1MHZ, calibrated at 30°C and 3 V	30°C	1.8 V to 3.6 V	–3%	±2%	+3%	
1-MHz tolerance overall	BCSCTL1 = CALBC1_1MHZ, DCOCTL = CALDCO_1MHZ, calibrated at 30°C and 3 V	–40°C to 85°C	1.8 V to 3.6 V	–6%	±3%	+6%	
8-MHz tolerance over temperature(1)	BCSCTL1 = CALBC1_8MHZ, DCOCTL = CALDCO_8MHZ, calibrated at 30°C and 3 V	0°C to 85°C	3 V	–3%	±0.5%	+3%	
8-MHz tolerance over V_{CC}	BCSCTL1 = CALBC1_8MHZ, DCOCTL = CALDCO_8MHZ, calibrated at 30°C and 3 V	30°C	2.2 V to 3.6 V	–3%	±2%	+3%	
8-MHz tolerance overall	BCSCTL1 = CALBC1_8MHZ, DCOCTL = CALDCO_8MHZ, calibrated at 30°C and 3 V	–40°C to 85°C	2.2 V to 3.6 V	–6%	±3%	+6%	
12-MHz tolerance over temperature(1)	BCSCTL1 = CALBC1_12MHZ, DCOCTL = CALDCO_12MHZ, calibrated at 30°C and 3 V	0°C to 85°C	3 V	–3%	±0.5%	+3%	
12-MHz tolerance over V_{CC}	BCSCTL1 = CALBC1_12MHZ, DCOCTL = CALDCO_12MHZ, calibrated at 30°C and 3 V	30°C	2.7 V to 3.6 V	–3%	±2%	+3%	
12-MHz tolerance overall	BCSCTL1 = CALBC1_12MHZ, DCOCTL = CALDCO_12MHZ, calibrated at 30°C and 3 V	–40°C to 85°C	2.7 V to 3.6 V	–6%	±3%	+6%	
16-MHz tolerance over temperature(1)	BCSCTL1 = CALBC1_16MHZ, DCOCTL = CALDCO_16MHZ, calibrated at 30°C and 3 V	0°C to 85°C	3 V	–3%	±0.5%	+3%	
16-MHz tolerance over V_{CC}	BCSCTL1 = CALBC1_16MHZ, DCOCTL = CALDCO_16MHZ, calibrated at 30°C and 3 V	30°C	3.3 V to 3.6 V	–3%	±2%	+3%	
16-MHz tolerance overall	BCSCTL1 = CALBC1_16MHZ, DCOCTL = CALDCO_16MHZ, calibrated at 30°C and 3 V	–40°C to 85°C	3.3 V to 3.6 V	–6%	±3%	+6%	

(1) This is the frequency change from the measured frequency at 30°C over temperature.

Copyright © 2011–2016, Texas Instruments Incorporated

5.20 Wake-up Times From Lower-Power Modes (LPM3, LPM4)

over recommended ranges of supply voltage and operating free-air temperature (unless otherwise noted)

PARAMETER		TEST CONDITIONS	V_{CC}	MIN	TYP	MAX	UNIT
$t_{DCO,LPM3/4}$	DCO clock wake-up time from LPM3 or LPM4 (1)	BCSCTL1 = CALBC1_1MHz, DCOCTL = CALDCO_1MHz	3 V		1.5		µs
$t_{CPU,LPM3/4}$	CPU wake-up time from LPM3 or LPM4 (2)				$1/f_{MCLK}$ + $t_{Clock,LPM3/4}$		

(1) The DCO clock wake-up time is measured from the edge of an external wake-up signal (for example, port interrupt) to the first clock edge observable externally on a clock pin (MCLK or SMCLK).
(2) Parameter applicable only if DCOCLK is used for MCLK.

5.21 Typical Characteristics, DCO Clock Wake-up Time From LPM3 or LPM4

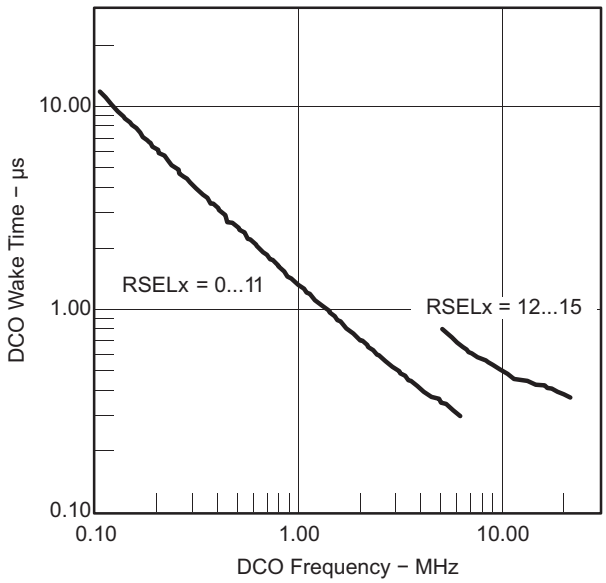

Figure 5-15. DCO Wake-up Time From LPM3 vs DCO Frequency

Copyright © 2011–2016, Texas Instruments Incorporated

5.22 Crystal Oscillator, XT1, Low-Frequency Mode(1)

over recommended ranges of supply voltage and operating free-air temperature (unless otherwise noted)

PARAMETER		TEST CONDITIONS	V_{CC}	MIN	TYP	MAX	UNIT
$f_{LFXT1,LF}$	LFXT1 oscillator crystal frequency, LF mode 0, 1	XTS = 0, LFXT1Sx = 0 or 1	1.8 V to 3.6 V		32768		Hz
$f_{LFXT1,LF,logic}$	LFXT1 oscillator logic level square-wave input frequency, LF mode	XTS = 0, XCAPx = 0, LFXT1Sx = 3	1.8 V to 3.6 V	10000	32768	50000	Hz
OA_{LF}	Oscillation allowance for LF crystals	XTS = 0, LFXT1Sx = 0, $f_{LFXT1,LF}$ = 32768 Hz, $C_{L,eff}$ = 6 pF			500		kΩ
		XTS = 0, LFXT1Sx = 0, $f_{LFXT1,LF}$ = 32768 Hz, $C_{L,eff}$ = 12 pF			200		
$C_{L,eff}$	Integrated effective load capacitance, LF mode(2)	XTS = 0, XCAPx = 0			1		pF
		XTS = 0, XCAPx = 1			5.5		
		XTS = 0, XCAPx = 2			8.5		
		XTS = 0, XCAPx = 3			11		
	Duty cycle, LF mode	XTS = 0, Measured at P2.0/ACLK, $f_{LFXT1,LF}$ = 32768 Hz	2.2 V	30%	50%	70%	
$f_{Fault,LF}$	Oscillator fault frequency, LF mode(3)	XTS = 0, XCAPx = 0, LFXT1Sx = 3(4)	2.2 V	10		10000	Hz

(1) To improve EMI on the XT1 oscillator, the following guidelines should be observed.
- Keep the trace between the device and the crystal as short as possible.
- Design a good ground plane around the oscillator pins.
- Prevent crosstalk from other clock or data lines into oscillator pins XIN and XOUT.
- Avoid running PCB traces underneath or adjacent to the XIN and XOUT pins.
- Use assembly materials and processes that avoid any parasitic load on the oscillator XIN and XOUT pins.
- If conformal coating is used, make sure that it does not induce capacitive or resistive leakage between the oscillator pins.
- Do not route the XOUT line to the JTAG header to support the serial programming adapter as shown in other documentation. This signal is no longer required for the serial programming adapter.

(2) Includes parasitic bond and package capacitance (approximately 2 pF per pin).
Because the PCB adds additional capacitance, verify the correct load by measuring the ACLK frequency. For a correct setup, the effective load capacitance should always match the specification of the used crystal.

(3) Frequencies below the MIN specification set the fault flag. Frequencies above the MAX specification do not set the fault flag. Frequencies in between might set the flag.

(4) Measured with logic-level input frequency but also applies to operation with crystals.

5.23 Internal Very-Low-Power Low-Frequency Oscillator (VLO)

over recommended ranges of supply voltage and operating free-air temperature (unless otherwise noted)

PARAMETER		T_A	V_{CC}	MIN	TYP	MAX	UNIT
f_{VLO}	VLO frequency	–40°C to 85°C	3 V	4	12	20	kHz
df_{VLO}/d_T	VLO frequency temperature drift	–40°C to 85°C	3 V		0.5		%/°C
df_{VLO}/dV_{CC}	VLO frequency supply voltage drift	25°C	1.8 V to 3.6 V		4		%/V

5.24 Timer_A

over recommended ranges of supply voltage and operating free-air temperature (unless otherwise noted)

PARAMETER		TEST CONDITIONS	V_{CC}	MIN	TYP	MAX	UNIT
f_{TA}	Timer_A input clock frequency	SMCLK, duty cycle = 50% ±10%			f_{SYSTEM}		MHz
$t_{TA,cap}$	Timer_A capture timing	TA0, TA1	3 V	20			ns

5.25 USCI (UART Mode)

over recommended ranges of supply voltage and operating free-air temperature (unless otherwise noted)

PARAMETER		TEST CONDITIONS	V_{CC}	MIN	TYP	MAX	UNIT
f_{USCI}	USCI input clock frequency	SMCLK, duty cycle = 50% ±10%			f_{SYSTEM}		MHz
$f_{max,BITCLK}$	Maximum BITCLK clock frequency (equals baud rate in MBaud)(1)		3 V	2			MHz
t_τ	UART receive deglitch time(2)		3 V	50	100	600	ns

(1) The DCO wake-up time must be considered in LPM3 and LPM4 for baud rates above 1 MHz.
(2) Pulses on the UART receive input (UCxRX) shorter than the UART receive deglitch time are suppressed. To ensure that pulses are correctly recognized, their duration should exceed the maximum specification of the deglitch time.

5.26 USCI (SPI Master Mode)

over recommended ranges of supply voltage and operating free-air temperature (unless otherwise noted) (see Figure 5-16 and Figure 5-17)

PARAMETER		TEST CONDITIONS	V_{CC}	MIN	MAX	UNIT
f_{USCI}	USCI input clock frequency	SMCLK, duty cycle = 50% ±10%			f_{SYSTEM}	MHz
$t_{SU,MI}$	SOMI input data setup time		3 V	75		ns
$t_{HD,MI}$	SOMI input data hold time		3 V	0		ns
$t_{VALID,MO}$	SIMO output data valid time	UCLK edge to SIMO valid, C_L = 20 pF	3 V		20	ns

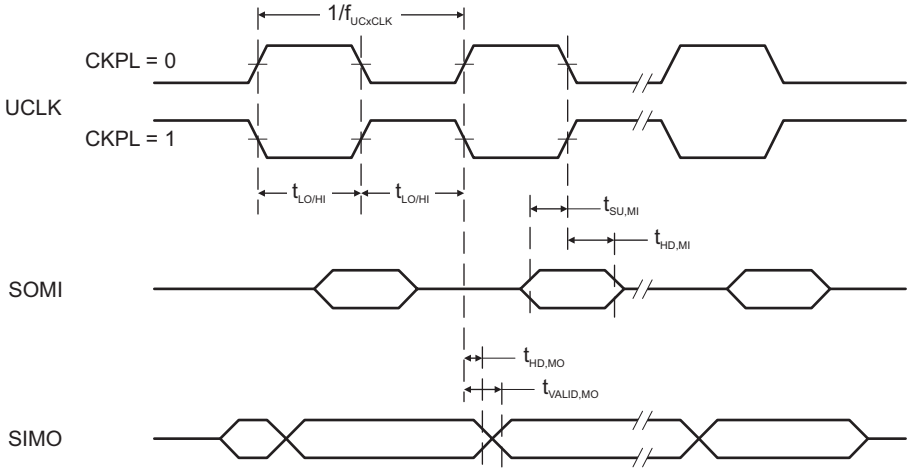

Figure 5-16. SPI Master Mode, CKPH = 0

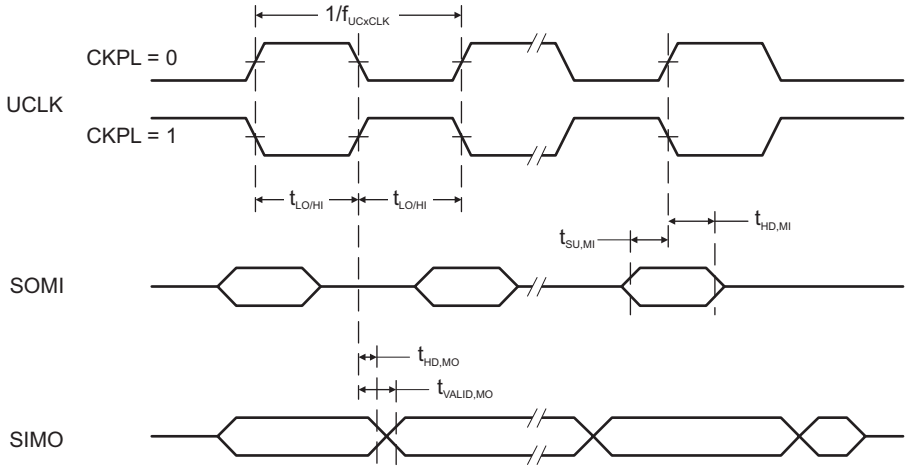

Figure 5-17. SPI Master Mode, CKPH = 1

Copyright © 2011–2016, Texas Instruments Incorporated

5.27 USCI (SPI Slave Mode)

over recommended ranges of supply voltage and operating free-air temperature (unless otherwise noted) (see Figure 5-18 and Figure 5-19)

PARAMETER		TEST CONDITIONS	V_{CC}	MIN	TYP	MAX	UNIT
$t_{STE,LEAD}$	STE lead time, STE low to clock		3 V		50		ns
$t_{STE,LAG}$	STE lag time, Last clock to STE high		3 V	10			ns
$t_{STE,ACC}$	STE access time, STE low to SOMI data out		3 V		50		ns
$t_{STE,DIS}$	STE disable time, STE high to SOMI high impedance		3 V		50		ns
$t_{SU,SI}$	SIMO input data setup time		3 V	15			ns
$t_{HD,SI}$	SIMO input data hold time		3 V	10			ns
$t_{VALID,SO}$	SOMI output data valid time	UCLK edge to SOMI valid, C_L = 20 pF	3 V		50	75	ns

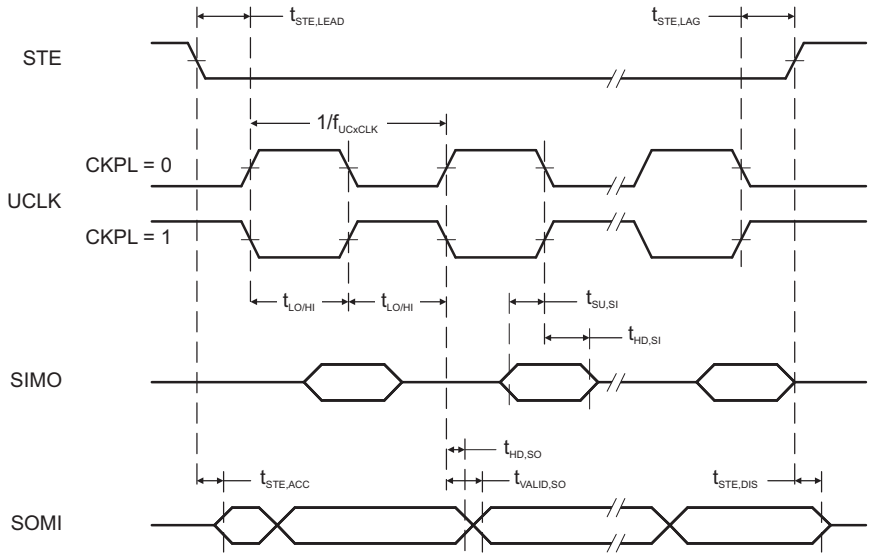

Figure 5-18. SPI Slave Mode, CKPH = 0

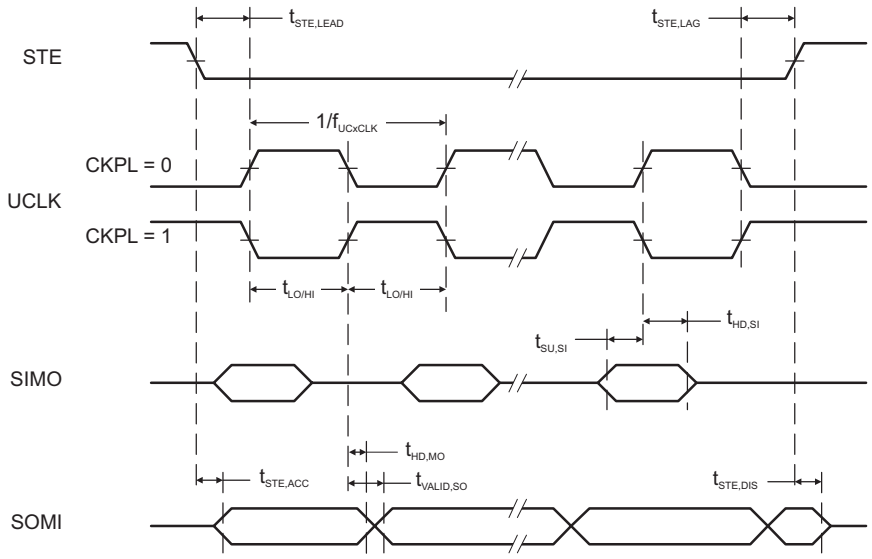

Figure 5-19. SPI Slave Mode, CKPH = 1

5.28 USCI (I^2C Mode)

over recommended ranges of supply voltage and operating free-air temperature (unless otherwise noted) (see Figure 5-20)

PARAMETER		TEST CONDITIONS	V_{CC}	MIN	TYP	MAX	UNIT
f_{USCI}	USCI input clock frequency	SMCLK, duty cycle = 50% ±10%				f_{SYSTEM}	MHz
f_{SCL}	SCL clock frequency		3 V	0		400	kHz
$t_{HD,STA}$	Hold time (repeated) START	f_{SCL} ≤ 100 kHz	3 V	4.0			µs
		f_{SCL} > 100 kHz		0.6			
$t_{SU,STA}$	Setup time for a repeated START	f_{SCL} ≤ 100 kHz	3 V	4.7			µs
		f_{SCL} > 100 kHz		0.6			
$t_{HD,DAT}$	Data hold time		3 V	0			ns
$t_{SU,DAT}$	Data setup time		3 V	250			ns
$t_{SU,STO}$	Setup time for STOP		3 V	4.0			µs
t_{SP}	Pulse duration of spikes suppressed by input filter		3 V	50	100	600	ns

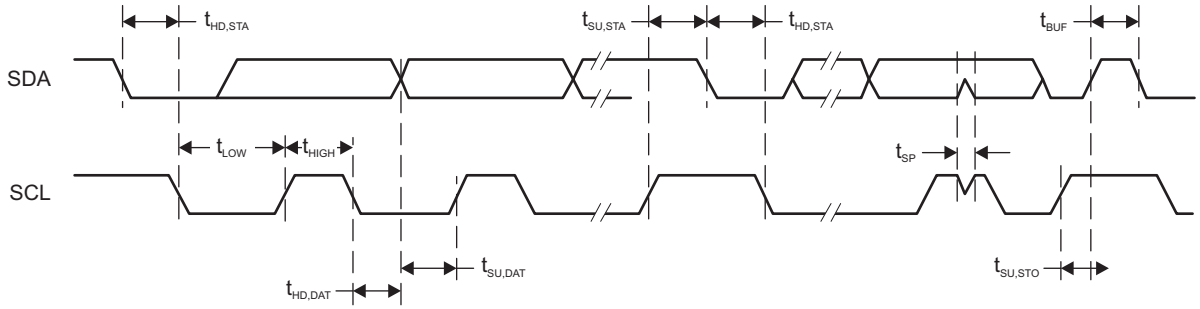

Figure 5-20. I^2C Mode Timing

Copyright © 2011–2016, Texas Instruments Incorporated

5.29 10-Bit ADC, Power Supply and Input Range Conditions (MSP430G2x33 Only)

over recommended ranges of supply voltage and operating free-air temperature (unless otherwise noted)[1]

PARAMETER		TEST CONDITIONS	T_A	V_{CC}	MIN	TYP	MAX	UNIT
V_{CC}	Analog supply voltage	V_{SS} = 0 V			2.2		3.6	V
V_{Ax}	Analog input voltage[2]	All Ax terminals, Analog inputs selected in ADC10AE register		3 V	0		V_{CC}	V
I_{ADC10}	ADC10 supply current[3]	$f_{ADC10CLK}$ = 5.0 MHz, ADC10ON = 1, REFON = 0, ADC10SHT0 = 1, ADC10SHT1 = 0, ADC10DIV = 0	25°C	3 V		0.6		mA
I_{REF+}	Reference supply current, reference buffer disabled[4]	$f_{ADC10CLK}$ = 5.0 MHz, ADC10ON = 0, REF2_5V = 0, REFON = 1, REFOUT = 0	25°C	3 V		0.25		mA
		$f_{ADC10CLK}$ = 5.0 MHz, ADC10ON = 0, REF2_5V = 1, REFON = 1, REFOUT = 0				0.25		
$I_{REFB,0}$	Reference buffer supply current with ADC10SR = 0[4]	$f_{ADC10CLK}$ = 5.0 MHz, ADC10ON = 0, REFON = 1, REF2_5V = 0, REFOUT = 1, ADC10SR = 0	25°C	3 V		1.1		mA
$I_{REFB,1}$	Reference buffer supply current with ADC10SR = 1[4]	$f_{ADC10CLK}$ = 5.0 MHz, ADC10ON = 0, REFON = 1, REF2_5V = 0, REFOUT = 1, ADC10SR = 1	25°C	3 V		0.5		mA
C_I	Input capacitance	Only one terminal Ax can be selected at one time	25°C	3 V			27	pF
R_I	Input MUX ON resistance	0 V ≤ V_{Ax} ≤ V_{CC}	25°C	3 V		1000		Ω

(1) The leakage current is defined in the leakage current table with Px.y/Ax parameter.
(2) The analog input voltage range must be within the selected reference voltage range V_{R+} to V_{R-} for valid conversion results.
(3) The internal reference supply current is not included in current consumption parameter I_{ADC10}.
(4) The internal reference current is supplied through terminal V_{CC}. Consumption is independent of the ADC10ON control bit, unless a conversion is active. The REFON bit enables the built-in reference to settle before starting an A/D conversion.

5.30 10-Bit ADC, Built-In Voltage Reference (MSP430G2x33 Only)

over recommended ranges of supply voltage and operating free-air temperature (unless otherwise noted)

PARAMETER		TEST CONDITIONS	V_{CC}	MIN	TYP	MAX	UNIT
$V_{CC,REF+}$	Positive built-in reference analog supply voltage range	I_{VREF+} ≤ 1 mA, REF2_5V = 0		2.2			V
		I_{VREF+} ≤ 1 mA, REF2_5V = 1		2.9			
V_{REF+}	Positive built-in reference voltage	I_{VREF+} ≤ I_{VREF+}max, REF2_5V = 0	3 V	1.41	1.5	1.59	V
		I_{VREF+} ≤ I_{VREF+}max, REF2_5V = 1		2.35	2.5	2.65	
$I_{LD,VREF+}$	Maximum VREF+ load current		3 V			±1	mA
	VREF+ load regulation	I_{VREF+} = 500 µA ±100 µA, Analog input voltage V_{Ax} ≈ 0.75 V, REF2_5V = 0	3 V			±2	LSB
		I_{VREF+} = 500 µA ±100 µA, Analog input voltage V_{Ax} ≈ 1.25 V, REF2_5V = 1				±2	
	V_{REF+} load regulation response time	I_{VREF+} = 100 µA → 900 µA, V_{Ax} ≈ 0.5 × VREF+, Error of conversion result ≤ 1 LSB, ADC10SR = 0	3 V			400	ns
C_{VREF+}	Maximum capacitance at pin VREF+	I_{VREF+} ≤ ±1 mA, REFON = 1, REFOUT = 1	3 V			100	pF
TC_{REF+}	Temperature coefficient	I_{VREF+} = const with 0 mA ≤ I_{VREF+} ≤ 1 mA	3 V			±100	ppm/°C
t_{REFON}	Settling time of internal reference voltage to 99.9% VREF	I_{VREF+} = 0.5 mA, REF2_5V = 0, REFON = 0 → 1	3.6 V			30	µs
$t_{REFBURST}$	Settling time of reference buffer to 99.9% VREF	I_{VREF+} = 0.5 mA, REF2_5V = 1, REFON = 1, REFBURST = 1, ADC10SR = 0	3 V			2	µs

Copyright © 2011–2016, Texas Instruments Incorporated

5.31 10-Bit ADC, External Reference(1) (MSP430G2x33 Only)

over recommended ranges of supply voltage and operating free-air temperature (unless otherwise noted)

PARAMETER		TEST CONDITIONS	V_{CC}	MIN	TYP	MAX	UNIT
VEREF+	Positive external reference input voltage range (2)	VEREF+ > VEREF–, SREF1 = 1, SREF0 = 0		1.4		V_{CC}	V
		VEREF– ≤ VEREF+ ≤ V_{CC} – 0.15 V, SREF1 = 1, SREF0 = 1 (3)		1.4		3	
VEREF–	Negative external reference input voltage range (4)	VEREF+ > VEREF–		0		1.2	V
ΔVEREF	Differential external reference input voltage range, ΔVEREF = VEREF+ – VEREF–	VEREF+ > VEREF– (5)		1.4		V_{CC}	V
I_{VEREF+}	Static input current into VEREF+	0 V ≤ VEREF+ ≤ V_{CC}, SREF1 = 1, SREF0 = 0	3 V		±1		µA
		0 V ≤ VEREF+ ≤ V_{CC} – 0.15 V ≤ 3 V, SREF1 = 1, SREF0 = 1 (3)	3 V		0		
$I_{VEREF–}$	Static input current into VEREF–	0 V ≤ VEREF– ≤ V_{CC}	3 V		±1		µA

(1) The external reference is used during conversion to charge and discharge the capacitance array. The input capacitance, C_I, is also the dynamic load for an external reference during conversion. The dynamic impedance of the reference supply should follow the recommendations on analog-source impedance to allow the charge to settle for 10-bit accuracy.
(2) The accuracy limits the minimum positive external reference voltage. Lower reference voltage levels may be applied with reduced accuracy requirements.
(3) Under this condition, the external reference is internally buffered. The reference buffer is active and requires the reference buffer supply current I_{REFB}. The current consumption can be limited to the sample and conversion period with REBURST = 1.
(4) The accuracy limits the maximum negative external reference voltage. Higher reference voltage levels may be applied with reduced accuracy requirements.
(5) The accuracy limits the minimum external differential reference voltage. Lower differential reference voltage levels may be applied with reduced accuracy requirements.

5.32 10-Bit ADC, Timing Parameters (MSP430G2x33 Only)

over recommended ranges of supply voltage and operating free-air temperature (unless otherwise noted)

PARAMETER		TEST CONDITIONS		V_{CC}	MIN	TYP	MAX	UNIT
$f_{ADC10CLK}$	ADC10 input clock frequency	For specified performance of ADC10 linearity parameters	ADC10SR = 0	3 V	0.45		6.3	MHz
			ADC10SR = 1		0.45		1.5	
$f_{ADC10OSC}$	ADC10 built-in oscillator frequency	ADC10DIVx = 0, ADC10SSELx = 0, $f_{ADC10CLK}$ = $f_{ADC10OSC}$		3 V	3.7		6.3	MHz
$t_{CONVERT}$	Conversion time	ADC10 built-in oscillator, ADC10SSELx = 0, $f_{ADC10CLK}$ = $f_{ADC10OSC}$		3 V	2.06		3.51	µs
		$f_{ADC10CLK}$ from ACLK, MCLK, or SMCLK: ADC10SSELx ≠ 0			13 × ADC10DIV × 1 / $f_{ADC10CLK}$			
$t_{ADC10ON}$	Turnon settling time of the ADC	(1)					100	ns

(1) The condition is that the error in a conversion started after $t_{ADC10ON}$ is less than ±0.5 LSB. The reference and input signal are already settled.

5.33 10-Bit ADC, Linearity Parameters (MSP430G2x33 Only)

over recommended ranges of supply voltage and operating free-air temperature (unless otherwise noted)

PARAMETER		TEST CONDITIONS	V_{CC}	MIN	TYP	MAX	UNIT
E_I	Integral linearity error		3 V			±1	LSB
E_D	Differential linearity error		3 V			±1	LSB
E_O	Offset error	Source impedance R_S < 100 Ω	3 V			±1	LSB
E_G	Gain error		3 V		±1.1	±2	LSB
E_T	Total unadjusted error		3 V		±2	±5	LSB

5.34 10-Bit ADC, Temperature Sensor and Built-In V_{MID} (MSP430G2x33 Only)

over recommended ranges of supply voltage and operating free-air temperature (unless otherwise noted)

PARAMETER		TEST CONDITIONS	V_{CC}	MIN	TYP	MAX	UNIT
I_{SENSOR}	Temperature sensor supply current (1)	REFON = 0, INCHx = 0Ah, T_A = 25°C	3 V		60		µA
TC_{SENSOR}		ADC10ON = 1, INCHx = 0Ah (2)	3 V		3.55		mV/°C
$t_{Sensor(sample)}$	Sample time required if channel 10 is selected (3)	ADC10ON = 1, INCHx = 0Ah, Error of conversion result ≤ 1 LSB	3 V	30			µs
I_{VMID}	Current into divider at channel 11	ADC10ON = 1, INCHx = 0Bh	3 V			(4)	µA
V_{MID}	V_{CC} divider at channel 11	ADC10ON = 1, INCHx = 0Bh, $V_{MID} \approx 0.5 \times V_{CC}$	3 V		1.5		V
$t_{VMID(sample)}$	Sample time required if channel 11 is selected (5)	ADC10ON = 1, INCHx = 0Bh, Error of conversion result ≤ 1 LSB	3 V	1220			ns

(1) The sensor current I_{SENSOR} is consumed if (ADC10ON = 1 and REFON = 1) or (ADC10ON = 1 and INCH = 0Ah and sample signal is high). When REFON = 1, I_{SENSOR} is included in I_{REF+}. When REFON = 0, I_{SENSOR} applies during conversion of the temperature sensor input (INCH = 0Ah).
(2) The following formula can be used to calculate the temperature sensor output voltage:
$V_{Sensor,typ} = TC_{Sensor}$ (273 + T [°C]) + $V_{Offset,sensor}$ [mV] or
$V_{Sensor,typ} = TC_{Sensor}$ T [°C] + $V_{Sensor}(T_A = 0°C)$ [mV]
(3) The typical equivalent impedance of the sensor is 51 kΩ. The sample time required includes the sensor-on time $t_{SENSOR(on)}$.
(4) No additional current is needed. The V_{MID} is used during sampling.
(5) The on-time $t_{VMID(on)}$ is included in the sampling time $t_{VMID(sample)}$; no additional on time is needed.

5.35 Flash Memory

over recommended ranges of supply voltage and operating free-air temperature (unless otherwise noted)

PARAMETER		TEST CONDITIONS	V_{CC}	MIN	TYP	MAX	UNIT
$V_{CC(PGM/ERASE)}$	Program and erase supply voltage			2.2		3.6	V
f_{FTG}	Flash timing generator frequency			257		476	kHz
I_{PGM}	Supply current from V_{CC} during program		2.2 V, 3.6 V		1	5	mA
I_{ERASE}	Supply current from V_{CC} during erase		2.2 V, 3.6 V		1	7	mA
t_{CPT}	Cumulative program time (1)		2.2 V, 3.6 V			10	ms
$t_{CMErase}$	Cumulative mass erase time		2.2 V, 3.6 V	20			ms
	Program and erase endurance			10^4	10^5		cycles
$t_{Retention}$	Data retention duration	T_J = 25°C		100			years
t_{Word}	Word or byte program time	See (2)			30		t_{FTG}
$t_{Block, 0}$	Block program time for first byte or word	See (2)			25		t_{FTG}
$t_{Block, 1-63}$	Block program time for each additional byte or word	See (2)			18		t_{FTG}
$t_{Block, End}$	Block program end-sequence wait time	See (2)			6		t_{FTG}
$t_{Mass\ Erase}$	Mass erase time	See (2)			10593		t_{FTG}
$t_{Seg\ Erase}$	Segment erase time	See (2)			4819		t_{FTG}

(1) Do not exceed the cumulative program time when writing to a 64-byte flash block. This parameter applies to all programming methods: individual word or byte write and block write modes.
(2) These values are hardwired into the state machine of the flash controller ($t_{FTG} = 1/f_{FTG}$).

Copyright © 2011–2016, Texas Instruments Incorporated

5.36 RAM

over recommended ranges of supply voltage and operating free-air temperature (unless otherwise noted)

PARAMETER		TEST CONDITIONS	MIN	MAX	UNIT
$V_{(RAMh)}$	RAM retention supply voltage (1)	CPU halted	1.6		V

(1) This parameter defines the minimum supply voltage V_{CC} when the data in RAM remains unchanged. No program execution should happen during this supply voltage condition.

5.37 JTAG and Spy-Bi-Wire Interface

over recommended ranges of supply voltage and operating free-air temperature (unless otherwise noted)

PARAMETER		V_{CC}	MIN	TYP	MAX	UNIT
f_{SBW}	Spy-Bi-Wire input frequency	2.2 V	0		20	MHz
$t_{SBW,Low}$	Spy-Bi-Wire low clock pulse duration	2.2 V	0.025		15	µs
$t_{SBW,En}$	Spy-Bi-Wire enable time (TEST high to acceptance of first clock edge(1))	2.2 V			1	µs
$t_{SBW,Ret}$	Spy-Bi-Wire return to normal operation time	2.2 V	15		100	µs
f_{TCK}	TCK input frequency(2)	2.2 V	0		5	MHz
$R_{Internal}$	Internal pulldown resistance on TEST	2.2 V	25	60	90	kΩ

(1) Tools that access the Spy-Bi-Wire interface must wait for the maximum $t_{SBW,En}$ time after pulling the TEST/SBWCLK pin high before applying the first SBWCLK clock edge.
(2) f_{TCK} may be restricted to meet the timing requirements of the module selected.

5.38 JTAG Fuse(1)

over recommended ranges of supply voltage and operating free-air temperature (unless otherwise noted)

PARAMETER		TEST CONDITIONS	MIN	MAX	UNIT
$V_{CC(FB)}$	Supply voltage during fuse-blow condition	T_A = 25°C	2.5		V
V_{FB}	Voltage level on TEST for fuse blow		6	7	V
I_{FB}	Supply current into TEST during fuse blow			100	mA
t_{FB}	Time to blow fuse			1	ms

(1) After the fuse is blown, no further access to the JTAG/Test, Spy-Bi-Wire, and emulation features is possible, and JTAG is switched to bypass mode.

6 Detailed Description

6.1 CPU

The MSP430 CPU has a 16-bit RISC architecture that is highly transparent to the application. All operations, other than program-flow instructions, are performed as register operations in conjunction with seven addressing modes for source operand and four addressing modes for destination operand.

The CPU is integrated with 16 registers that provide reduced instruction execution time. The register-to-register operation execution time is one cycle of the CPU clock. Four of the registers, R0 to R3, are dedicated as program counter, stack pointer, status register, and constant generator, respectively. The remaining registers are general-purpose registers (see Figure 6-1).

Peripherals are connected to the CPU using data, address, and control buses, and can be handled with all instructions.

The instruction set consists of the original 51 instructions with three formats and seven address modes and additional instructions for the expanded address range. Each instruction can operate on word and byte data.

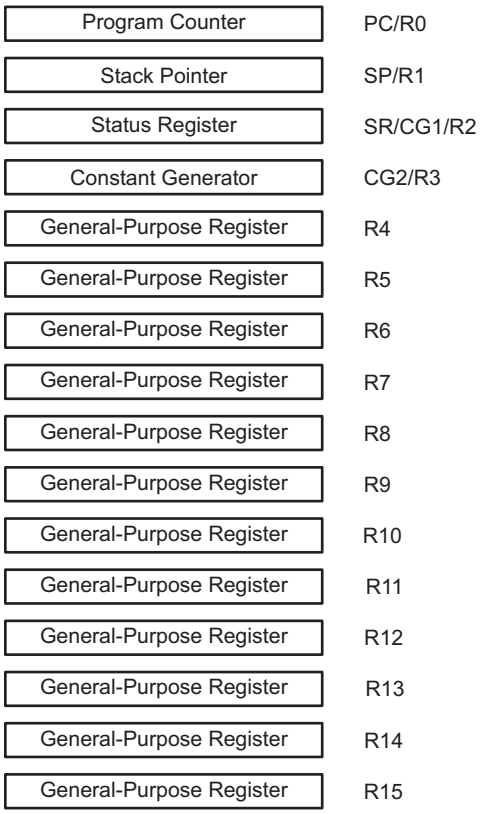

Figure 6-1. Integrated CPU Registers

Copyright © 2011–2016, Texas Instruments Incorporated

6.2 Instruction Set

The instruction set consists of 51 instructions with three formats and seven address modes. Each instruction can operate on word and byte data. Table 6-1 lists examples of the three types of instruction formats. Table 6-2 lists the address modes.

Table 6-1. Instruction Word Formats

INSTRUCTION FORMAT	EXAMPLE	OPERATION
Dual operands, source-destination	ADD R4,R5	R4 + R5 → R5
Single operands, destination only	CALL R8	PC → (TOS), R8 → PC
Relative jump, unconditional or conditional	JNE	Jump-on-equal bit = 0

Table 6-2. Address Mode Descriptions

ADDRESS MODE	S(1)	D	SYNTAX	EXAMPLE	OPERATION
Register	✓	✓	MOV Rs,Rd	MOV R10,R11	R10 → R11
Indexed	✓	✓	MOV X(Rn),Y(Rm)	MOV 2(R5),6(R6)	M(2+R5) → M(6+R6)
Symbolic (PC relative)	✓	✓	MOV EDE,TONI		M(EDE) → M(TONI)
Absolute	✓	✓	MOV &MEM,&TCDAT		M(MEM) → M(TCDAT)
Indirect	✓		MOV @Rn,Y(Rm)	MOV @R10,Tab(R6)	M(R10) → M(Tab+R6)
Indirect autoincrement	✓		MOV @Rn+,Rm	MOV @R10+,R11	M(R10) → R11 R10 + 2 → R10
Immediate	✓		MOV #X,TONI	MOV #45,TONI	#45 → M(TONI)

(1) S = source, D = destination

6.3 Operating Modes

These microcontrollers have one active mode and five software-selectable low-power modes of operation. An interrupt event can wake the device from any of the low-power modes, service the request, and restore back to the low-power mode on return from the interrupt program.

Software can configure the following operating modes:

- Active mode (AM)
  - All clocks are active
- Low-power mode 0 (LPM0)
  - CPU is disabled
  - ACLK and SMCLK remain active, MCLK is disabled
- Low-power mode 1 (LPM1)
  - CPU is disabled
  - ACLK and SMCLK remain active, MCLK is disabled
  - DC generator of the DCO is disabled if DCO not used in active mode
- Low-power mode 2 (LPM2)
  - CPU is disabled
  - MCLK and SMCLK are disabled
  - DC generator of the DCO remains enabled
  - ACLK remains active
- Low-power mode 3 (LPM3)
  - CPU is disabled
  - MCLK and SMCLK are disabled
  - DC generator of the DCO is disabled
  - ACLK remains active
- Low-power mode 4 (LPM4)
  - CPU is disabled
  - ACLK is disabled
  - MCLK and SMCLK are disabled
  - DC generator of the DCO is disabled
  - Crystal oscillator is stopped

Copyright © 2011–2016, Texas Instruments Incorporated

6.4 Interrupt Vector Addresses

The interrupt vectors and the power-up starting address are in the address range 0FFFFh to 0FFC0h (see Table 6-3). The vector contains the 16-bit address of the appropriate interrupt handler instruction sequence.

If the reset vector (at address 0FFFEh) contains 0FFFFh (for example, if the flash is not programmed), the CPU goes into LPM4 immediately after power-up.

Table 6-3. Interrupt Sources, Flags, and Vectors

INTERRUPT SOURCE	INTERRUPT FLAG	SYSTEM INTERRUPT	WORD ADDRESS	PRIORITY
Power up External reset Watchdog Timer+ Flash key violation PC out of range(1)	PORIFG RSTIFG WDTIFG KEYV(2)	Reset	0FFFEh	31, highest
NMI Oscillator fault Flash memory access violation	NMIIFG OFIFG ACCVIFG(2)	(non)-maskable(3) (non)-maskable (non)-maskable	0FFFCh	30
Timer1_A3	TACCR0 CCIFG(4)	maskable	0FFFAh	29
Timer1_A3	TACCR2 TACCR1 CCIFG, TAIFG(2)(4)	maskable	0FFF8h	28
			0FFF6h	27
Watchdog Timer+	WDTIFG	maskable	0FFF4h	26
Timer0_A3	TACCR0 CCIFG(4)	maskable	0FFF2h	25
Timer0_A3	TACCR2 TACCR1 CCIFG, TAIFG (5)(4)	maskable	0FFF0h	24
USCI_A0, USCI_B0 receive USCI_B0 I^2C status	UCA0RXIFG, UCB0RXIFG(2)(5)	maskable	0FFEEh	23
USCI_A0, USCI_B0 transmit USCI_B0 I^2C receive or transmit	UCA0TXIFG, UCB0TXIFG(2)(6)	maskable	0FFECh	22
ADC10 (MSP430G2x33 only)	ADC10IFG(4)	maskable	0FFEAh	21
			0FFE8h	20
I/O Port P2 (up to eight flags)	P2IFG.0 to P2IFG.7(2)(4)	maskable	0FFE6h	19
I/O Port P1 (up to eight flags)	P1IFG.0 to P1IFG.7(2)(4)	maskable	0FFE4h	18
			0FFE2h	17
			0FFE0h	16
See (7)			0FFDEh	15
See (8)			0FFDEh to 0FFC0h	14 to 0, lowest

(1) A reset is generated if the CPU tries to fetch instructions from within the module register memory address range (0h to 01FFh) or from within unused address ranges.
(2) Multiple source flags
(3) (non)-maskable: the individual interrupt-enable bit can disable an interrupt event, but the general interrupt enable cannot.
(4) Interrupt flags are in the module.
(5) In SPI mode: UCB0RXIFG. In I^2C mode: UCALIFG, UCNACKIFG, ICSTTIFG, UCSTPIFG.
(6) In UART or SPI mode: UCB0TXIFG. In I^2C mode: UCB0RXIFG, UCB0TXIFG.
(7) This location is used as bootloader security key (BSLSKEY). A 0xAA55 at this location disables the BSL completely. A zero (0h) disables the erasure of the flash if an invalid password is supplied.
(8) The interrupt vectors at addresses 0FFDEh to 0FFC0h are not used in this device and can be used for regular program code if necessary.

6.5 Special Function Registers (SFRs)

Most interrupt and module enable bits are collected into the lowest address space. Special function register bits not allocated to a functional purpose are not physically present in the device. Simple software access is provided with this arrangement.

Legend

rw	Bit can be read and written.
rw-0, rw-1	Bit can be read and written. It is reset or set by PUC.
rw-(0), rw-(1)	Bit can be read and written. It is reset or set by POR.
	SFR bit is not present in device.

Figure 6-2. Interrupt Enable Register 1 (Address = 00h)

7	6	5	4	3	2	1	0
		ACCVIE	NMIIE			OFIE	WDTIE
		rw-0	rw-0			rw-0	rw-0

Table 6-4. Interrupt Enable Register 1 Description

Bit	Field	Type	Reset	Description
5	ACCVIE	RW	0h	Flash access violation interrupt enable
4	NMIIE	RW	0h	(Non)maskable interrupt enable
1	OFIE	RW	0h	Oscillator fault interrupt enable
0	WDTIE	RW	0h	Watchdog Timer interrupt enable. Inactive if watchdog mode is selected. Active if Watchdog Timer is configured in interval timer mode.

Figure 6-3. Interrupt Enable Register 2 (Address = 01h)

7	6	5	4	3	2	1	0
				UCB0TXIE	UCB0RXIE	UCA0TXIE	UCA0RXIE
				rw-0	rw-0	rw-0	rw-0

Table 6-5. Interrupt Enable Register 2 Description

Bit	Field	Type	Reset	Description
3	UCB0TXIE	RW	0h	USCI_B0 transmit interrupt enable
2	UCB0RXIE	RW	0h	USCI_B0 receive interrupt enable
1	UCA0TXIE	RW	0h	USCI_A0 transmit interrupt enable
0	UCA0RXIE	RW	0h	USCI_A0 receive interrupt enable

Figure 6-4. Interrupt Flag Register 1 (Address = 02h)

7	6	5	4	3	2	1	0
			NMIIFG	RSTIFG	PORIFG	OFIFG	WDTIFG
			rw-0	rw-(0)	rw-(1)	rw-1	rw-(0)

Table 6-6. Interrupt Flag Register 1 Description

Bit	Field	Type	Reset	Description
4	NMIIFG	RW	0h	Set by the $\overline{RST}$/NMI pin
3	RSTIFG	RW	0h	External reset interrupt flag. Set on a reset condition at $\overline{RST}$/NMI pin in reset mode. Reset on V_{CC} power-up.
2	PORIFG	RW	1h	Power-On Reset interrupt flag. Set on V_{CC} power-up.
1	OFIFG	RW	1h	Flag set on oscillator fault.
0	WDTIFG	RW	0h	Set on watchdog timer overflow (in watchdog mode) or security key violation. Reset on V_{CC} power-on or a reset condition at the $\overline{RST}$/NMI pin in reset mode.

Copyright © 2011–2016, Texas Instruments Incorporated

Figure 6-5. Interrupt Flag Register 2 (Address = 03h)

7	6	5	4	3	2	1	0
				UCB0TXIFG	UCB0RXIFG	UCA0TXIFG	UCA0RXIFG
				rw-1	rw-0	rw-1	rw-0

Table 6-7. Interrupt Flag Register 2 Description

Bit	Field	Type	Reset	Description
3	UCB0TXIFG	RW	0h	USCI_B0 transmit interrupt flag
2	UCB0RXIFG	RW	1h	USCI_B0 receive interrupt flag
1	UCA0TXIFG	RW	1h	USCI_A0 transmit interrupt flag
0	UCA0RXIFG	RW	0h	USCI_A0 receive interrupt flag

6.6 Memory Organization

Table 6-8 summarizes the memory map.

Table 6-8. Memory Organization

		MSP430G2233 MSP430G2203	MSP430G2333 MSP430G2303	MSP430G2433 MSP430G2403	MSP430G2533
Memory	Size	2KB	4KB	8KB	16KB
Main: interrupt vector	Flash	FFFFh to FFC0h	FFFFh to FFC0h	FFFFh to FFC0h	FFFFh to FFC0h
Main: code memory	Flash	FFFFh to F800h	FFFFh to F000h	FFFFh to E000h	FFFFh to C000h
Information memory	Size	256 byte	256 byte	256 byte	256 byte
	Flash	010FFh to 01000h	010FFh to 01000h	010FFh to 01000h	010FFh to 01000h
RAM	Size	256 byte	256 byte	512 byte	512 byte
		02FFh to 0200h	02FFh to 0200h	03FFh to 0200h	03FFh to 0200h
Peripherals	16-bit	01FFh to 0100h	01FFh to 0100h	01FFh to 0100h	01FFh to 0100h
	8-bit	0FFh to 010h	0FFh to 010h	0FFh to 010h	0FFh to 010h
	8-bit SFR	0Fh to 00h	0Fh to 00h	0Fh to 00h	0Fh to 00h

6.7 Bootloader (BSL)

The MSP430 BSL enables users to program the flash memory or RAM using a UART serial interface. Access to the MSP430 memory through the BSL is protected by user-defined password. For complete description of the features of the BSL and its implementation, see the *MSP430 Programming With the Bootloader User's Guide* (SLAU319). Table 6-9 lists the BSL function pins.

Table 6-9. BSL Function Pins

BSL FUNCTION	20-PIN PW PACKAGE 20-PIN N PACKAGE	28-PIN PW PACKAGE	32-PIN RHB PACKAGE
Data transmit	3 - P1.1	3 - P1.1	1 - P1.1
Data receive	7 - P1.5	7 - P1.5	5 - P1.5

6.8 Flash Memory

The flash memory can be programmed through the Spy-Bi-Wire/JTAG port or in-system by the CPU. The CPU can perform single-byte and single-word writes to the flash memory. Features of the flash memory include:

- Flash memory has n segments of main memory and four segments of information memory (A to D) of 64 bytes each. Each segment in main memory is 512 bytes in size.
- Segments 0 to n may be erased in one step, or each segment may be individually erased.
- Segments A to D can be erased individually or as a group with segments 0 to n. Segments A to D are also called *information memory*.
- Segment A contains calibration data. After reset segment A is protected against programming and erasing. It can be unlocked but care should be taken not to erase this segment if the device-specific calibration data is required.

6.9 Peripherals

Peripherals are connected to the CPU through data, address, and control buses. The peripherals can be managed using all instructions. For complete module descriptions, see the *MSP430x2xx Family User's Guide* (SLAU144).

6.9.1 Oscillator and System Clock

The clock system is supported by the basic clock module that includes support for a 32768-Hz watch crystal oscillator, an internal very-low-power low-frequency oscillator and an internal digitally controlled oscillator (DCO). The basic clock module is designed to meet the requirements of both low system cost and low power consumption. The internal DCO provides a fast turnon clock source and stabilizes in less than 1 µs. The basic clock module provides the following clock signals:

- Auxiliary clock (ACLK), sourced either from a 32768-Hz watch crystal or the internal LF oscillator.
- Main clock (MCLK), the system clock used by the CPU.
- Sub-Main clock (SMCLK), the subsystem clock used by the peripheral modules.

The DCO settings to calibrate the DCO output frequency are stored in the information memory segment A.

Copyright © 2011–2016, Texas Instruments Incorporated

6.9.2 Calibration Data Stored in Information Memory Segment A

Calibration data is stored for both the DCO and for ADC10 organized in a tag-length-value structure (see Table 6-10 and Table 6-11).

Table 6-10. Tags Used by the ADC Calibration Tags

NAME	ADDRESS	VALUE	DESCRIPTION
TAG_DCO_30	0x10F6	0x01	DCO frequency calibration at V_{CC} = 3 V and T_A = 30°C
TAG_ADC10_1	0x10DA	0x10	ADC10_1 calibration tag
TAG_EMPTY	–	0xFE	Identifier for empty memory areas

Table 6-11. Labels Used by the ADC Calibration Tags

LABEL	ADDRESS OFFSET	SIZE	CONDITION AT CALIBRATION
CAL_ADC_25T85	0x0010	word	INCHx = 1010b, REF2_5 = 1, T_A = 85°C
CAL_ADC_25T30	0x000E	word	INCHx = 1010b, REF2_5 = 1, T_A = 30°C
CAL_ADC_25VREF_FACTOR	0x000C	word	REF2_5 = 1, T_A = 30°C, I_{VREF+} = 1 mA
CAL_ADC_15T85	0x000A	word	INCHx = 1010b, REF2_5 = 0, T_A = 85°C
CAL_ADC_15T30	0x0008	word	INCHx = 1010b, REF2_5 = 0, T_A = 30°C
CAL_ADC_15VREF_FACTOR	0x0006	word	REF2_5 = 0, T_A = 30°C, I_{VREF+} = 0.5 mA
CAL_ADC_OFFSET	0x0004	word	External VREF = 1.5 V, $f_{ADC10CLK}$ = 5 MHz
CAL_ADC_GAIN_FACTOR	0x0002	word	External VREF = 1.5 V, $f_{ADC10CLK}$ = 5 MHz
CAL_BC1_1MHZ	0x0009	byte	–
CAL_DCO_1MHZ	0x0008	byte	–
CAL_BC1_8MHZ	0x0007	byte	–
CAL_DCO_8MHZ	0x0006	byte	–
CAL_BC1_12MHZ	0x0005	byte	–
CAL_DCO_12MHZ	0x0004	byte	–
CAL_BC1_16MHZ	0x0003	byte	–
CAL_DCO_16MHZ	0x0002	byte	–

6.9.3 Brownout

The brownout circuit is implemented to provide the proper internal reset signal to the device during power on and power off.

6.9.4 Digital I/O

Up to three 8-bit I/O ports are implemented:

- All individual I/O bits are independently programmable.
- Any combination of input, output, and interrupt condition (port P1 and port P2 only) is possible.
- Edge-selectable interrupt input capability for all bits of port P1 and port P2 (if available).
- Read/write access to port-control registers is supported by all instructions.
- Each I/O has an individually programmable pullup or pulldown resistor.
- Each I/O has an individually programmable pin oscillator enable bit to enable low-cost capacitive touch detection.

6.9.5 WDT+ Watchdog Timer

The primary function of the watchdog timer (WDT+) module is to perform a controlled system restart after a software problem occurs. If the selected time interval expires, a system reset is generated. If the watchdog function is not needed in an application, the module can be disabled or configured as an interval timer and can generate interrupts at selected time intervals.

6.9.6 Timer_A3 (TA0, TA1)

Timer0_A3 and Timer1_A3 are 16-bit timers/counters with three capture/compare registers. Timer_A3 can support multiple capture/compares, PWM outputs, and interval timing (see Table 6-12 and Table 6-13). Timer_A3 also has extensive interrupt capabilities. Interrupts may be generated from the counter on overflow conditions and from each of the capture/compare registers.

Table 6-12. Timer0_A3 Signal Connections

INPUT PIN NUMBER			DEVICE INPUT SIGNAL	MODULE INPUT NAME	MODULE BLOCK	MODULE OUTPUT SIGNAL	OUTPUT PIN NUMBER		
PW20, N20	PW28	RHB32					PW20, N20	PW28	RHB32
P1.0-2	P1.0-2	P1.0-31	TACLK	TACLK	Timer	NA			
			ACLK	ACLK					
			SMCLK	SMCLK					
PinOsc	PinOsc	PinOsc	TACLK	INCLK					
P1.1-3	P1.1-3	P1.1-1	TA0.0	CCI0A	CCR0	TA0	P1.1-3	P1.1-3	P1.1-1
			ACLK	CCI0B			P1.5-7	P1.5-7	P1.5-5
			V_{SS}	GND			–	P3.4-15	P3.4-14
			V_{CC}	V_{CC}					
P1.2-4	P1.2-4	P1.2-2	TA0.1	CCI1A	CCR1	TA1	P1.2-4	P1.2-4	P1.2-2
			CAOUT	CCI1B			P1.6-14	P1.6-22	P1.6-21
			V_{SS}	GND			P2.6-19	P2.6-27	P2.6-26
			V_{CC}	V_{CC}			–	P3.5-19	P3.5-18
–	P3.0-9	P3.0-7	TA0.2	CCI2A	CCR2	TA2	–	P3.0-9	P3.0-7
PinOsc	PinOsc	PinOsc	TA0.2	CCI2B			–	P3.6-20	P3.6-19
			V_{SS}	GND					
			V_{CC}	V_{CC}					

Copyright © 2011–2016, Texas Instruments Incorporated

Table 6-13. Timer1_A3 Signal Connections

INPUT PIN NUMBER			DEVICE INPUT SIGNAL	MODULE INPUT NAME	MODULE BLOCK	MODULE OUTPUT SIGNAL	OUTPUT PIN NUMBER		
PW20, N20	PW28	RHB32					PW20, N20	PW28	RHB32
–	P3.7-21	P3.7-20	TACLK	TACLK	Timer	NA			
			ACLK	ACLK					
			SMCLK	SMCLK					
–	P3.7-21	P3.7-20	TACLK	INCLK					
P2.0-8	P2.0-10	P2.0-9	TA1.0	CCI0A	CCR0	TA0	P2.0-8	P2.0-10	P2.0-9
P2.3-11	P2.3-16	P2.3-12	TA1.0	CCI0B			P2.3-11	P2.3-16	P2.3-15
			V_{SS}	GND				P3.1-8	P3.1-6
			V_{CC}	V_{CC}					
P2.1-9	P2.1-11	P2.1-10	TA1.1	CCI1A	CCR1	TA1	P2.1-9	P2.1-11	P2.1-10
P2.2-10	P2.2-12	P2.2-11	TA1.1	CCI1B			P2.2-10	P2.2-12	P2.2-11
			V_{SS}	GND				P3.2-13	P3.2-12
			V_{CC}	V_{CC}					
P2.4-12	P2.4-17	P2.4-16	TA1.2	CCI2A	CCR2	TA2	P2.4-12	P2.4-17	P2.4-16
P2.5-13	P2.5-18	P2.5-17	TA1.2	CCI2B			P2.5-13	P2.5-18	P2.5-17
			V_{SS}	GND				P3.3-14	P3.3-13
			V_{CC}	V_{CC}					

6.9.7 Universal Serial Communications Interface (USCI)

The USCI module is used for serial data communication. The USCI module supports synchronous communication protocols such as SPI (3-pin or 4-pin) and I^2C, and asynchronous communication protocols such as UART, enhanced UART with automatic baud rate detection (LIN), and IrDA. Not all packages support the USCI functionality.

USCI_A0 provides support for SPI (3-pin or 4-pin), UART, enhanced UART, and IrDA.

USCI_B0 provides support for SPI (3-pin or 4-pin) and I^2C.

6.9.8 ADC10 (MSP430G2x33 Only)

The ADC10 module supports fast 10-bit analog-to-digital conversions. The module implements a 10-bit SAR core, sample select control, reference generator, and data transfer controller (DTC) for automatic conversion result handling, allowing ADC samples to be converted and stored without any CPU intervention.

6.9.9 Peripheral File Map

Table 6-14 lists the registers that support word access. Table 6-15 that support byte access.

Table 6-14. Peripherals With Word Access

MODULE	REGISTER DESCRIPTION	ACRONYM	OFFSET
ADC10 (MSP430G2x33 only)	ADC data transfer start address	ADC10SA	1BCh
	ADC memory	ADC10MEM	1B4h
	ADC control register 1	ADC10CTL1	1B2h
	ADC control register 0	ADC10CTL0	1B0h
Timer1_A3	Capture/compare register	TA1CCR2	0196h
	Capture/compare register	TA1CCR1	0194h
	Capture/compare register	TA1CCR0	0192h
	Timer_A register	TA1R	0190h
	Capture/compare control	TA1CCTL2	0186h
	Capture/compare control	TA1CCTL1	0184h
	Capture/compare control	TA1CCTL0	0182h
	Timer_A control	TA1CTL	0180h
	Timer_A interrupt vector	TA1IV	011Eh
Timer0_A3	Capture/compare register	TA0CCR2	0176h
	Capture/compare register	TA0CCR1	0174h
	Capture/compare register	TA0CCR0	0172h
	Timer_A register	TA0R	0170h
	Capture/compare control	TA0CCTL2	0166h
	Capture/compare control	TA0CCTL1	0164h
	Capture/compare control	TA0CCTL0	0162h
	Timer_A control	TA0CTL	0160h
	Timer_A interrupt vector	TA0IV	012Eh
Flash Memory	Flash control 3	FCTL3	012Ch
	Flash control 2	FCTL2	012Ah
	Flash control 1	FCTL1	0128h
Watchdog Timer+	Watchdog timer control	WDTCTL	0120h

Table 6-15. Peripherals With Byte Access

MODULE	REGISTER DESCRIPTION	ACRONYM	OFFSET
USCI_B0	USCI_B0 transmit buffer	UCB0TXBUF	06Fh
	USCI_B0 receive buffer	UCB0RXBUF	06Eh
	USCI_B0 status	UCB0STAT	06Dh
	USCI B0 I^2C Interrupt enable	UCB0CIE	06Ch
	USCI_B0 bit rate control 1	UCB0BR1	06Bh
	USCI_B0 bit rate control 0	UCB0BR0	06Ah
	USCI_B0 control 1	UCB0CTL1	069h
	USCI_B0 control 0	UCB0CTL0	068h
	USCI_B0 I^2C slave address	UCB0SA	011Ah
	USCI_B0 I^2C own address	UCB0OA	0118h

Copyright © 2011–2016, Texas Instruments Incorporated

Table 6-15. Peripherals With Byte Access (continued)

MODULE	REGISTER DESCRIPTION	ACRONYM	OFFSET
USCI_A0	USCI_A0 transmit buffer	UCA0TXBUF	067h
	USCI_A0 receive buffer	UCA0RXBUF	066h
	USCI_A0 status	UCA0STAT	065h
	USCI_A0 modulation control	UCA0MCTL	064h
	USCI_A0 baud rate control 1	UCA0BR1	063h
	USCI_A0 baud rate control 0	UCA0BR0	062h
	USCI_A0 control 1	UCA0CTL1	061h
	USCI_A0 control 0	UCA0CTL0	060h
	USCI_A0 IrDA receive control	UCA0IRRCTL	05Fh
	USCI_A0 IrDA transmit control	UCA0IRTCTL	05Eh
	USCI_A0 auto baud rate control	UCA0ABCTL	05Dh
ADC10 (MSP430G2x33 only)	ADC analog enable 0	ADC10AE0	04Ah
	ADC analog enable 1	ADC10AE1	04Bh
	ADC data transfer control register 1	ADC10DTC1	049h
	ADC data transfer control register 0	ADC10DTC0	048h
Basic Clock System+	Basic clock system control 3	BCSCTL3	053h
	Basic clock system control 2	BCSCTL2	058h
	Basic clock system control 1	BCSCTL1	057h
	DCO clock frequency control	DCOCTL	056h
Port P3 (28-pin PW and 32-pin RHB only)	Port P3 selection 2. pin	P3SEL2	043h
	Port P3 resistor enable	P3REN	010h
	Port P3 selection	P3SEL	01Bh
	Port P3 direction	P3DIR	01Ah
	Port P3 output	P3OUT	019h
	Port P3 input	P3IN	018h
Port P2	Port P2 selection 2	P2SEL2	042h
	Port P2 resistor enable	P2REN	02Fh
	Port P2 selection	P2SEL	02Eh
	Port P2 interrupt enable	P2IE	02Dh
	Port P2 interrupt edge select	P2IES	02Ch
	Port P2 interrupt flag	P2IFG	02Bh
	Port P2 direction	P2DIR	02Ah
	Port P2 output	P2OUT	029h
	Port P2 input	P2IN	028h
Port P1	Port P1 selection 2	P1SEL2	041h
	Port P1 resistor enable	P1REN	027h
	Port P1 selection	P1SEL	026h
	Port P1 interrupt enable	P1IE	025h
	Port P1 interrupt edge select	P1IES	024h
	Port P1 interrupt flag	P1IFG	023h
	Port P1 direction	P1DIR	022h
	Port P1 output	P1OUT	021h
	Port P1 input	P1IN	020h
Special Function	SFR interrupt flag 2	IFG2	003h
	SFR interrupt flag 1	IFG1	002h
	SFR interrupt enable 2	IE2	001h
	SFR interrupt enable 1	IE1	000h

Copyright © 2011–2016, Texas Instruments Incorporated

6.10 I/O Port Diagrams

6.10.1 Port P1 Pin Diagram: P1.0 to P1.2, Input/Output With Schmitt Trigger

Figure 6-6 shows the port diagram. Table 6-16 summarizes the selection of the pin functions.

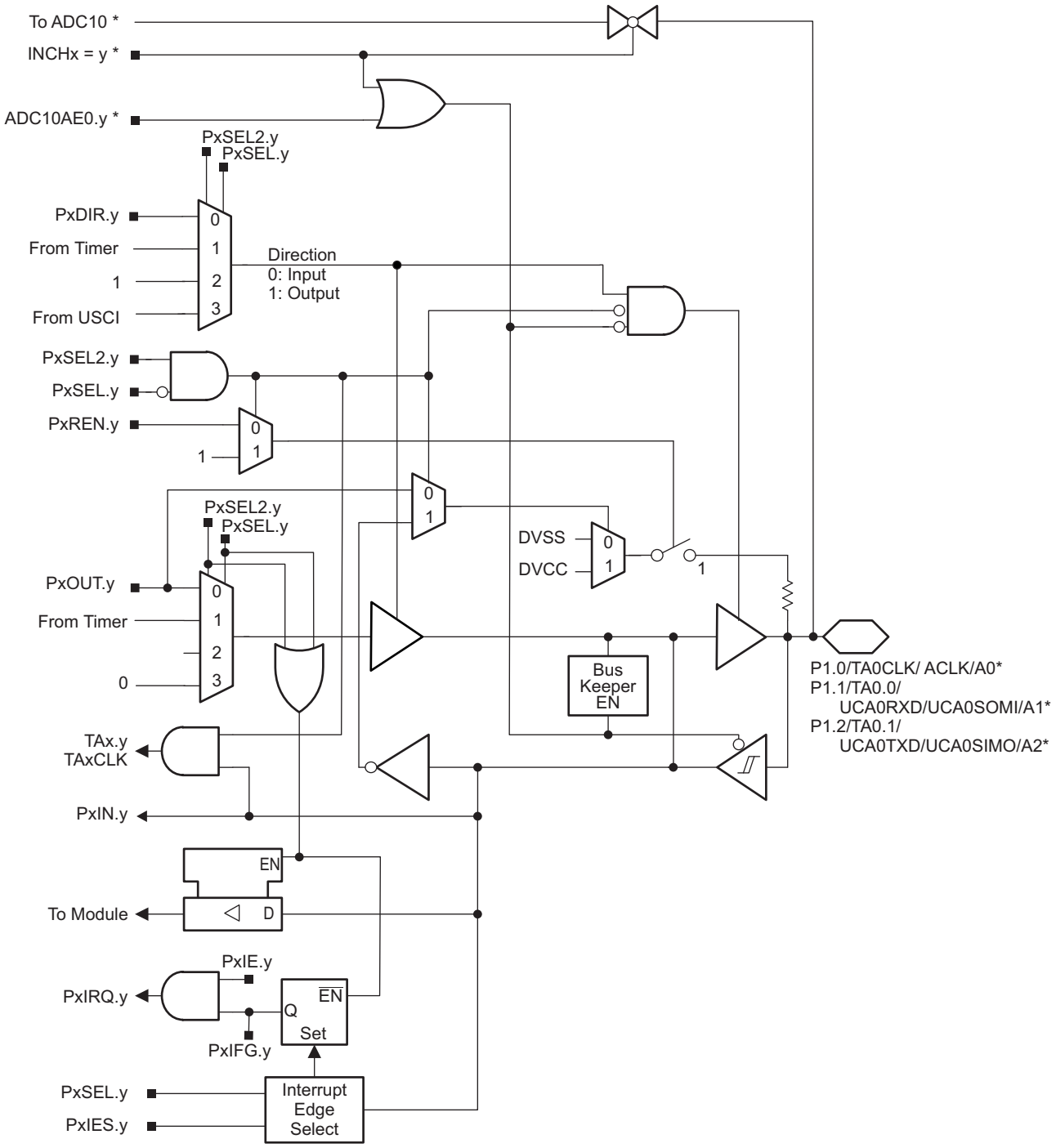

* Note: MSP430G2x33 devices only. MSP430G2x03 devices have no ADC10.

Figure 6-6. Port P1 (P1.0 to P1.2) Diagram

Copyright © 2011–2016, Texas Instruments Incorporated

Table 6-16. Port P1 (P1.0 to P1.2) Pin Functions

PIN NAME (P1.x)	x	FUNCTION	CONTROL BITS OR SIGNALS[1]			
			P1DIR.x	P1SEL.x	P1SEL2.x	ADC10AE.x (INCH.y = 1)[2]
P1.0/	0	P1.x (I/O)	I: 0; O: 1	0	0	0
TA0CLK/		TA0.TACLK	0	1	0	0
ACLK/		ACLK	1	1	0	0
A0[2]/		A0	X	X	X	1 (y = 0)
Pin Osc		Capacitive sensing	X	0	1	0
P1.1/	1	P1.x (I/O)	I: 0; O: 1	0	0	0
TA0.0/		TA0.0	1	1	0	0
		TA0.CCI0A	0	1	0	0
UCA0RXD/		UCA0RXD	from USCI	1	1	0
UCA0SOMI/		UCA0SOMI	from USCI	1	1	0
A1[2]/		A1	X	X	X	1 (y = 1)
Pin Osc		Capacitive sensing	X	0	1	0
P1.2/	2	P1.x (I/O)	I: 0; O: 1	0	0	0
TA0.1/		TA0.1	1	1	0	0
		TA0.CCI1A	0	1	0	0
UCA0TXD/		UCA0TXD	from USCI	1	1	0
UCA0SIMO/		UCA0SIMO	from USCI	1	1	0
A2[2]/		A2	X	X	X	1 (y = 2)
Pin Osc		Capacitive sensing	X	0	1	0

(1) X = don't care
(2) MSP430G2x33 devices only

6.10.2 Port P1 Pin Diagram: P1.3, Input/Output With Schmitt Trigger

Figure 6-7 shows the port diagram. Table 6-17 summarizes the selection of the pin functions.

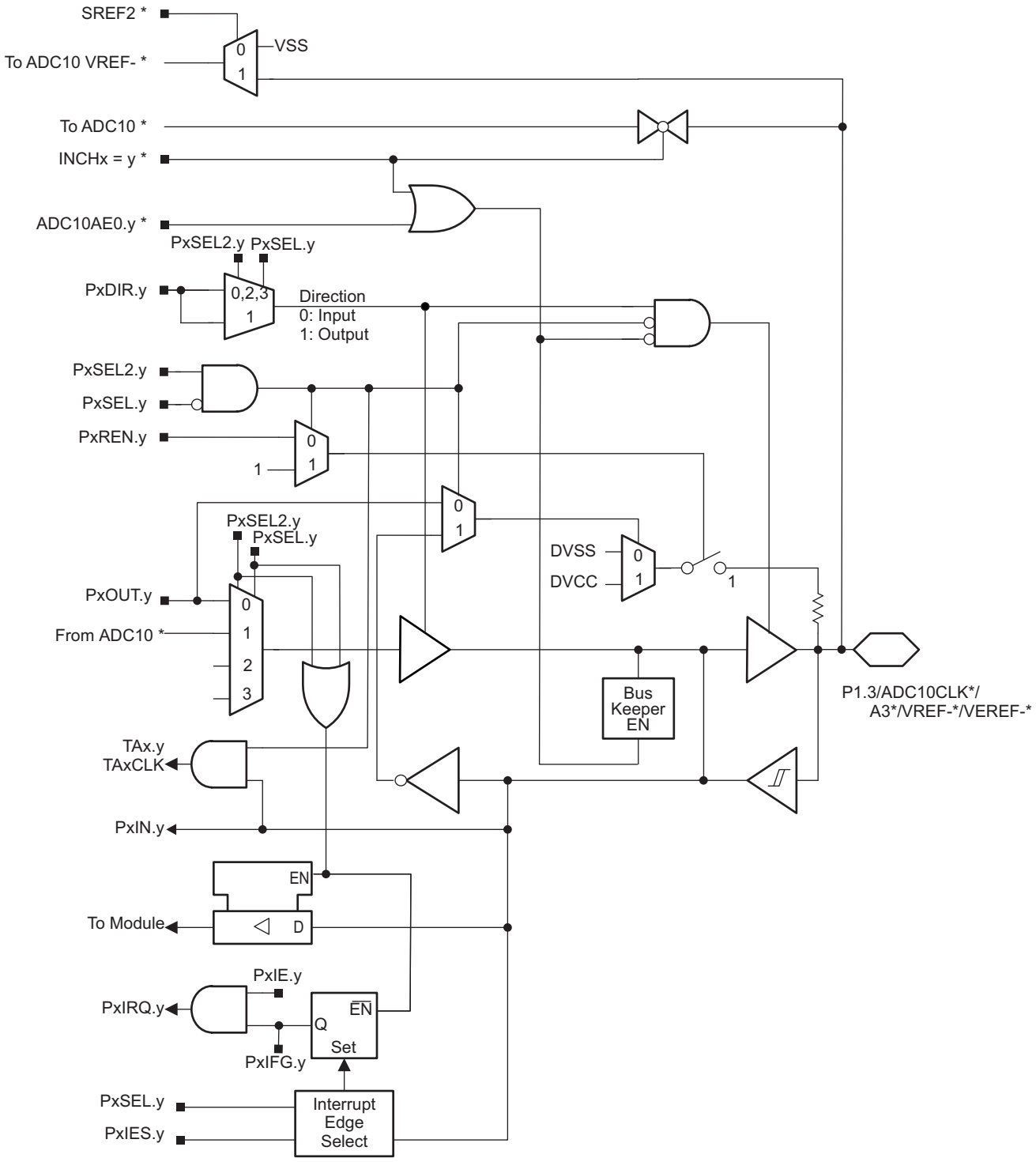

* Note: MSP430G2x33 devices only. MSP430G2x03 devices have no ADC10.

Figure 6-7. Port P1 (P1.3) Diagram

Copyright © 2011–2016, Texas Instruments Incorporated

Table 6-17. Port P1 (P1.3) Pin Functions

PIN NAME (P1.x)	x	FUNCTION	CONTROL BITS OR SIGNALS[1]			
			P1DIR.x	P1SEL.x	P1SEL2.x	ADC10AE.x (INCH.y = 1)[2]
P1.3/	3	P1.x (I/O)	I: 0; O: 1	0	0	0
ADC10CLK[2]/		ADC10CLK	1	1	0	0
A3[2]/		A3	X	X	X	1 (y = 3)
VREF-[2]/		VREF-	X	X	X	1
VEREF-[2]/		VEREF-	X	X	X	1
Pin Osc		Capacitive sensing	X	0	1	0

(1) X = don't care
(2) MSP430G2x33 devices only

6.10.3 Port P1 Pin Diagram: P1.4, Input/Output With Schmitt Trigger

Figure 6-8 shows the port diagram. Table 6-18 summarizes the selection of the pin functions.

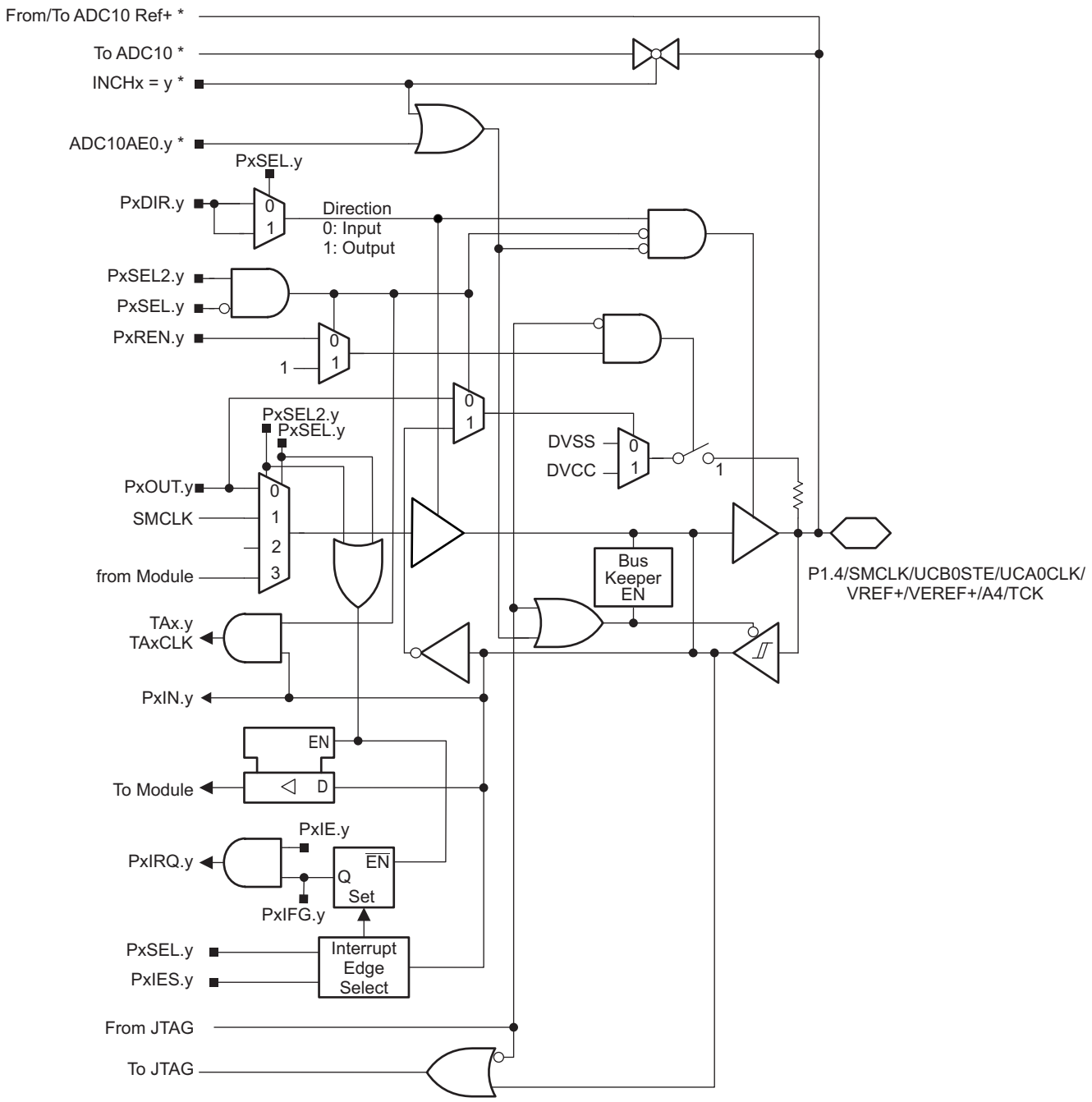

* Note: MSP430G2x33 devices only. MSP430G2x03 devices have no ADC10.

Figure 6-8. Port P1 (P1.4) Diagram

Copyright © 2011–2016, Texas Instruments Incorporated

Table 6-18. Port P1 (P1.4) Pin Functions

PIN NAME (P1.x)	x	FUNCTION	CONTROL BITS OR SIGNALS[1]				
			P1DIR.x	P1SEL.x	P1SEL2.x	ADC10AE.x (INCH.y = 1)[2]	JTAG Mode
P1.4/	4	P1.x (I/O)	I: 0; O: 1	0	0	0	0
SMCLK/		SMCLK	1	1	0	0	0
UCB0STE/		UCB0STE[3][4]	from USCI	1	1	0	0
UCA0CLK/		UCA0CLK[3][4]	from USCI	1	1	0	0
VREF+[2]/		VREF+	X	X	X	1	0
VEREF+[2]/		VEREF+	X	X	X	1	0
A4[2]/		A4	X	X	X	1 (y = 4)	0
TCK/		TCK	X	X	X	0	1
Pin Osc		Capacitive sensing	X	0	1	0	0

(1) X = don't care
(2) MSP430G2x33 devices only
(3) The pin direction is controlled by the USCI module.
(4) UCA0CLK function takes precedence over UCB0STE function. If the pin is required as UCA0CLK input or output, USCI_B0 is forced to 3-wire SPI mode if 4-wire SPI mode is selected.

6.10.4 Port P1 Pin Diagram: P1.5 to P1.7, Input/Output With Schmitt Trigger

Figure 6-9 shows the port diagram. Table 6-19 summarizes the selection of the pin functions.

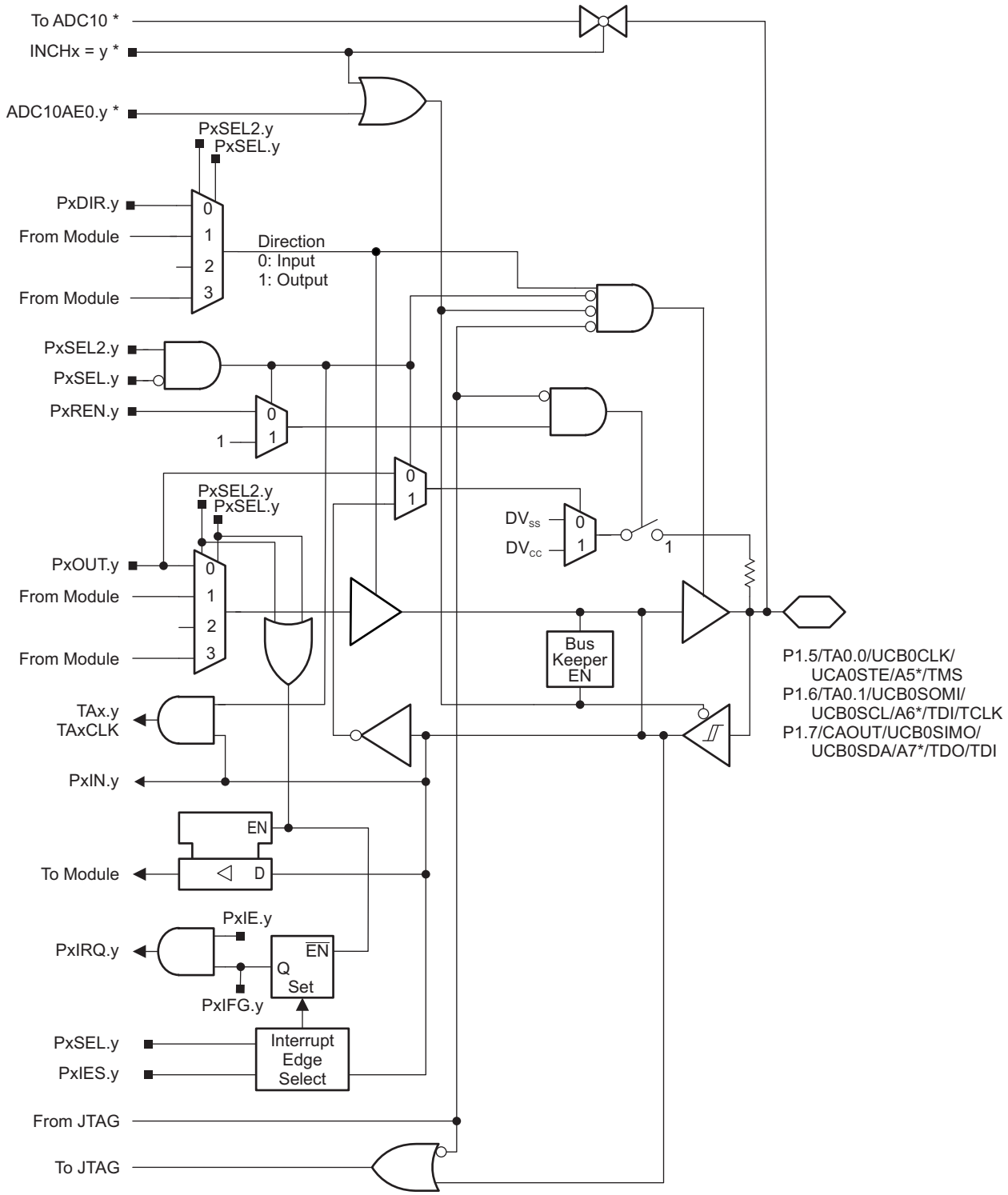

* Note: MSP430G2x33 devices only. MSP430G2x03 devices have no ADC10.

Figure 6-9. Port P1 (P1.5 to P1.7) Diagram

Copyright © 2011–2016, Texas Instruments Incorporated

Table 6-19. Port P1 (P1.5 to P1.7) Pin Functions

PIN NAME (P1.x)	x	FUNCTION	CONTROL BITS OR SIGNALS[1]				
			P1DIR.x	P1SEL.x	P1SEL2.x	ADC10AE.x (INCH.y = 1)[2]	JTAG Mode
P1.5/	5	P1.x (I/O)	I: 0; O: 1	0	0	0	0
TA0.0/		TA0.0	1	1	0	0	0
UCB0CLK/		UCB0CLK[3][4]	from USCI	1	1	0	0
UCA0STE/		UCA0STE[3][4]	from USCI	1	1	0	0
A5[2]/		A5	X	X	X	1 (y = 5)	0
TMS		TMS	X	X	X	0	1
Pin Osc		Capacitive sensing	X	0	1	0	0
P1.6/	6	P1.x (I/O)	I: 0; O: 1	0	0	0	0
TA0.1/		TA0.1	1	1	0	0	0
UCB0SOMI/		UCB0SOMI	from USCI	1	1	0	0
UCB0SCL/		UCB0SCL	from USCI	1	1	0	0
A6[2]/		A6	X	X	X	1 (y = 6)	0
TDI/TCLK/		TDI/TCLK	X	X	X	0	1
Pin Osc		Capacitive sensing	X	0	1	0	0
P1.7/	7	P1.x (I/O)	I: 0; O: 1	0	0	0	0
UCB0SIMO/		UCB0SIMO	from USCI	1	1	0	0
UCB0SDA/		UCB0SDA	from USCI	1	1	0	0
A7[2]/		A7	X	X	X	1 (y = 7)	0
TDO/TDI/		TDO/TDI	X	X	X	0	1
Pin Osc		Capacitive sensing	X	0	1	0	0

(1) X = don't care
(2) MSP430G2x33 devices only
(3) The pin direction is controlled by the USCI module.
(4) UCB0CLK function takes precedence over UCA0STE function. If the pin is required as UCB0CLK input or output, USCI_A0 is forced to 3-wire SPI mode if 4-wire SPI mode is selected.

6.10.5 Port P2 Pin Diagram: P2.0 to P2.5, Input/Output With Schmitt Trigger

Figure 6-10 shows the port diagram. Table 6-20 summarizes the selection of the pin functions.

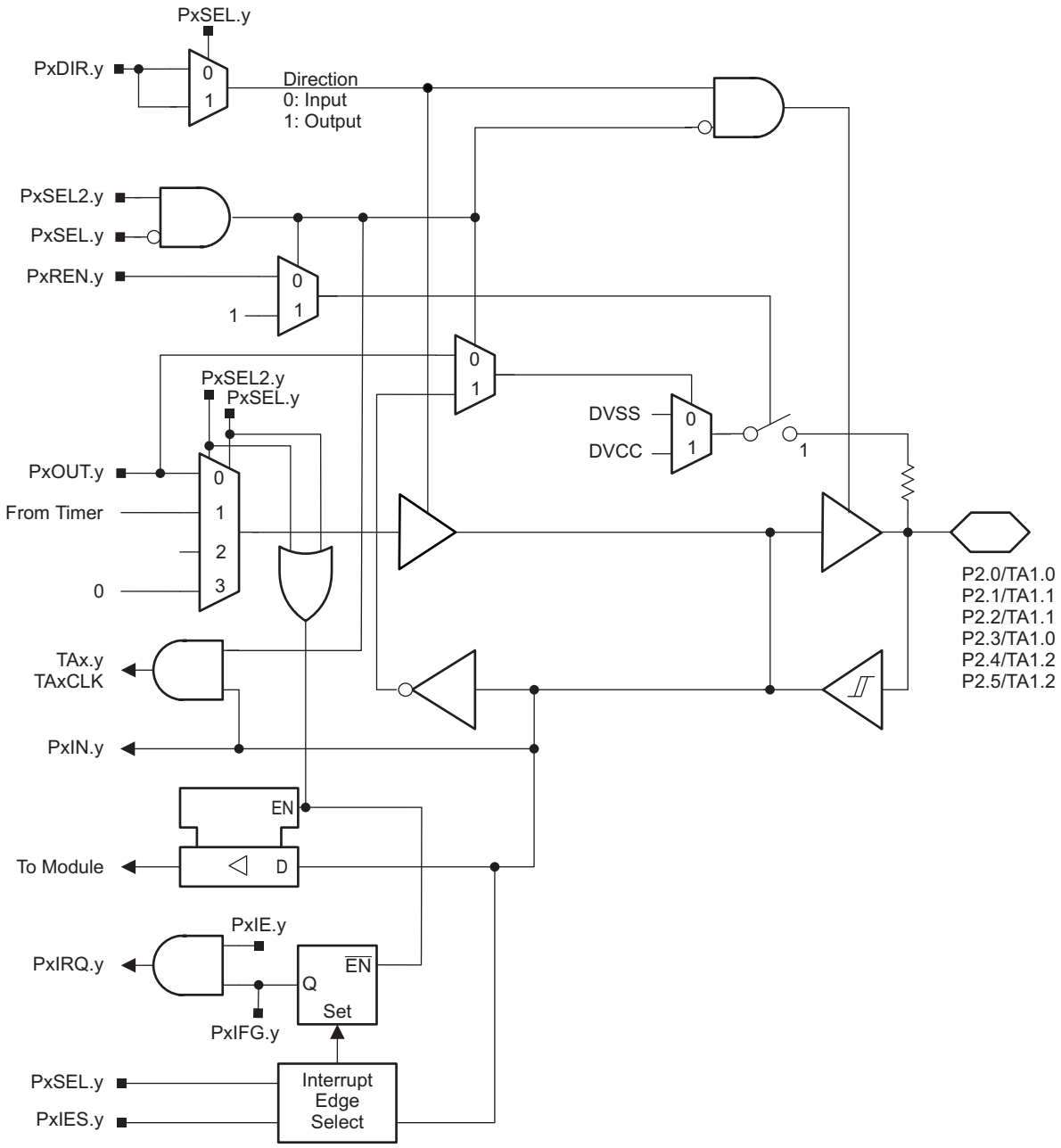

Figure 6-10. Port P2 (P2.0 to P2.5) Diagram

Copyright © 2011–2016, Texas Instruments Incorporated

Table 6-20. Port P2 (P2.0 to P2.5) Pin Functions

PIN NAME (P2.x)	x	FUNCTION	CONTROL BITS OR SIGNALS[1]		
			P2DIR.x	P2SEL.x	P2SEL2.x
P2.0/	0	P2.x (I/O)	I: 0; O: 1	0	0
TA1.0/		Timer1_A3.CCI0A	0	1	0
		Timer1_A3.TA0	1	1	0
Pin Osc		Capacitive sensing	X	0	1
P2.1/	1	P2.x (I/O)	I: 0; O: 1	0	0
TA1.1/		Timer1_A3.CCI1A	0	1	0
		Timer1_A3.TA1	1	1	0
Pin Osc		Capacitive sensing	X	0	1
P2.2/	2	P2.x (I/O)	I: 0; O: 1	0	0
TA1.1/		Timer1_A3.CCI1B	0	1	0
		Timer1_A3.TA1	1	1	0
Pin Osc		Capacitive sensing	X	0	1
P2.3/	3	P2.x (I/O)	I: 0; O: 1	0	0
TA1.0/		Timer1_A3.CCI0B	0	1	0
		Timer1_A3.TA0	1	1	0
Pin Osc		Capacitive sensing	X	0	1
P2.4/	4	P2.x (I/O)	I: 0; O: 1	0	0
TA1.2/		Timer1_A3.CCI2A	0	1	0
		Timer1_A3.TA2	1	1	0
Pin Osc		Capacitive sensing	X	0	1
P2.5/	5	P2.x (I/O)	I: 0; O: 1	0	0
TA1.2/		Timer1_A3.CCI2B	0	1	0
		Timer1_A3.TA2	1	1	0
Pin Osc		Capacitive sensing	X	0	1

(1) X = don't care

6.10.6 Port P2 Pin Diagram: P2.6, Input/Output With Schmitt Trigger

Figure 6-11 shows the port diagram. Table 6-21 summarizes the selection of the pin functions.

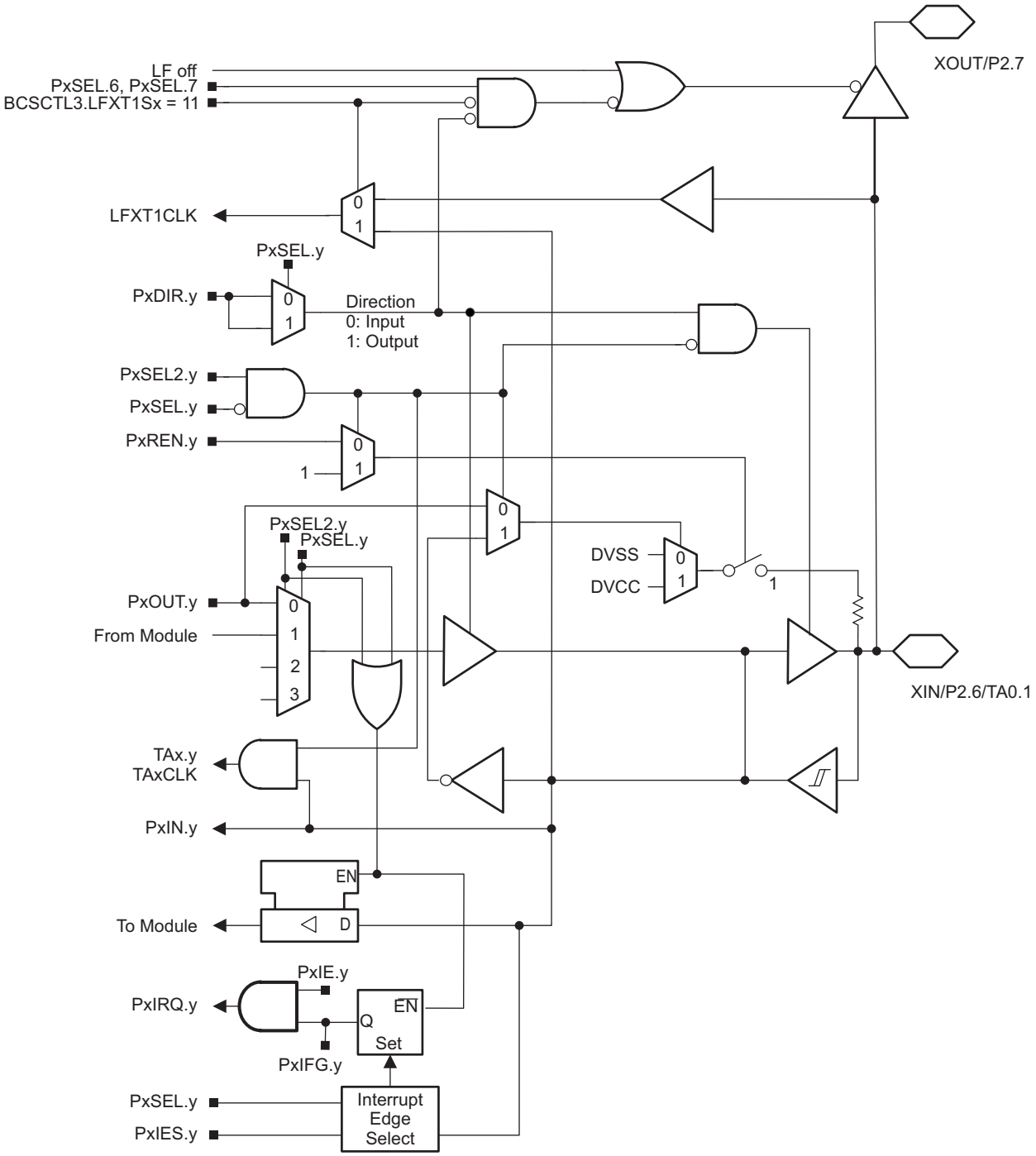

Figure 6-11. Port P2 (P2.6) Diagram

Copyright © 2011–2016, Texas Instruments Incorporated

Table 6-21. Port P2 (P2.6) Pin Functions

PIN NAME (P2.x)	x	FUNCTION	CONTROL BITS OR SIGNALS[1]		
			P2DIR.x	P2SEL.6 P2SEL.7	P2SEL2.6 P2SEL2.7
XIN	6	XIN	0	1 1	0 0
P2.6		P2.x (I/O)	I: 0; O: 1	0 X	0 0
TA0.1		Timer0_A3.TA1	1	1 0	0 0
Pin Osc		Capacitive sensing	X	0 X	1 X

(1) X = don't care

6.10.7 Port P2 Pin Diagram: P2.7, Input/Output With Schmitt Trigger

Figure 6-12 shows the port diagram. Table 6-22 summarizes the selection of the pin functions.

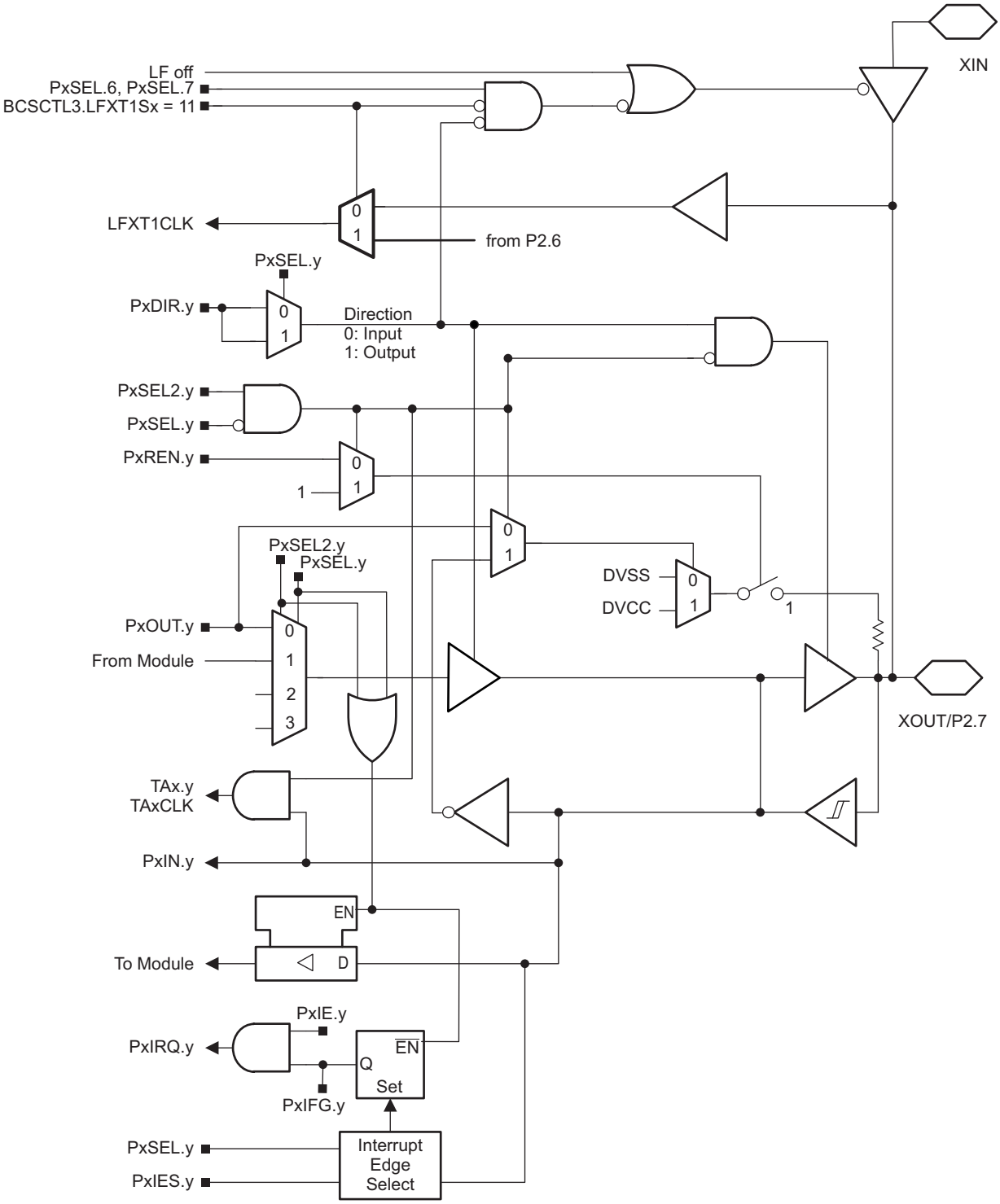

Figure 6-12. Port P2 (P2.7) Diagram

Copyright © 2011–2016, Texas Instruments Incorporated

Table 6-22. Port P2 (P2.7) Pin Functions

PIN NAME (P2.x)	x	FUNCTION	CONTROL BITS OR SIGNALS[1]		
			P2DIR.x	P2SEL.6 P2SEL.7	P2SEL2.6 P2SEL2.7
XOUT/	7	XOUT	1	1 1	0 0
P2.7/		P2.x (I/O)	I: 0; O: 1	0 X	0 0
Pin Osc		Capacitive sensing	X	0 X	1 X

(1) X = don't care

6.10.8 Port P3 Pin Diagram: P3.0 to P3.7, Input/Output With Schmitt Trigger (RHB and PW28 Package Only)

Figure 6-13 shows the port diagram. Table 6-23 summarizes the selection of the pin functions.

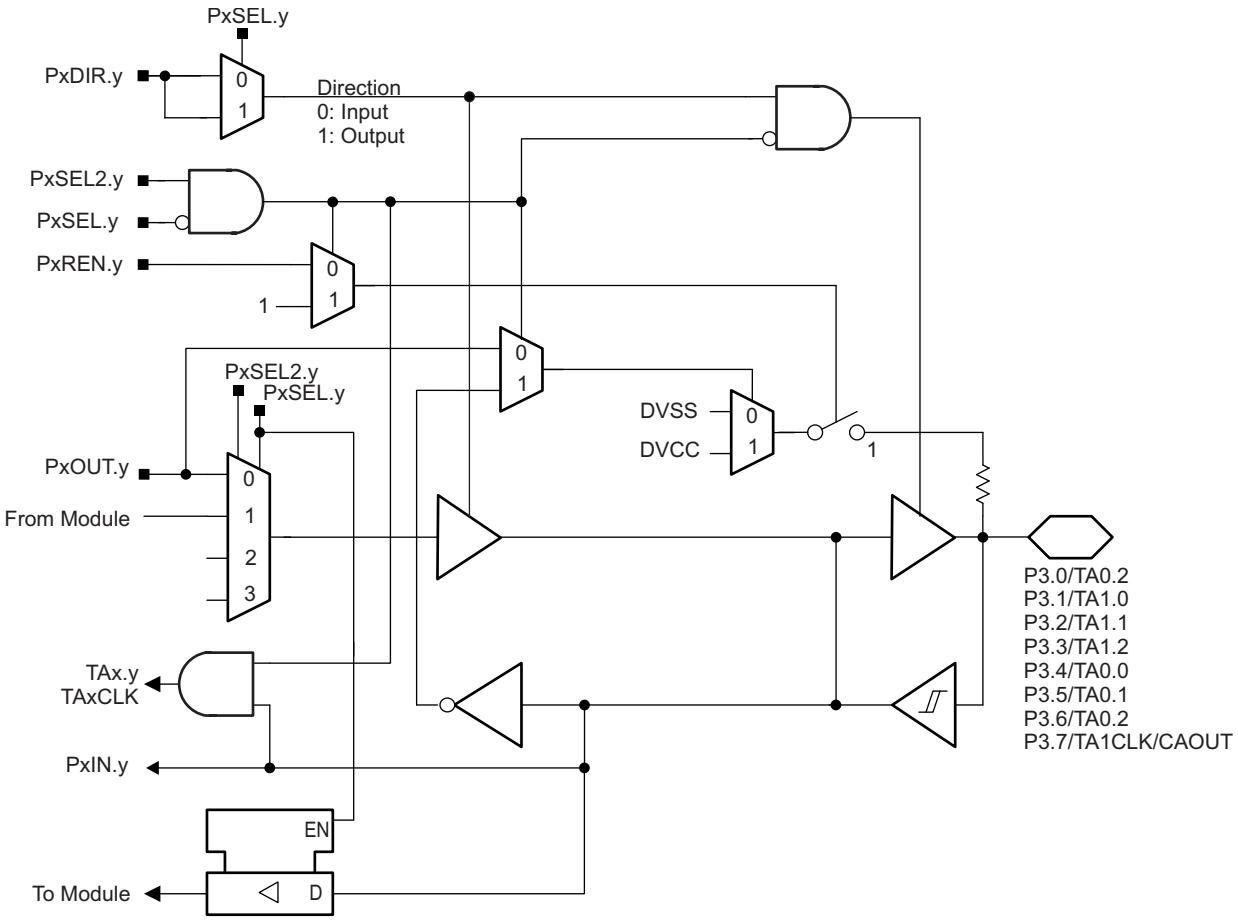

Figure 6-13. Port P3 (P3.0 to P3.7) Diagram (RHB and PW28 Package Only)

Copyright © 2011–2016, Texas Instruments Incorporated

Table 6-23. Port P3 (P3.0 to P3.7) Pin Functions (RHB and PW28 Package Only)

PIN NAME (P3.x)	x	FUNCTION	CONTROL BITS OR SIGNALS(1)		
			P3DIR.x	P3SEL.x	P3SEL2.x
P3.0/	0	P3.x (I/O)	I: 0; O: 1	0	0
TA0.2/		Timer0_A3.CCI2A	0	1	0
		Timer0_A3.TA2	1	1	0
Pin Osc		Capacitive sensing	X	0	1
P3.1/	1	P3.x (I/O)	I: 0; O: 1	0	0
TA1.0/		Timer1_A3.TA0	1	1	0
Pin Osc		Capacitive sensing	X	0	1
P3.2/	2	P3.x (I/O)	I: 0; O: 1	0	0
TA1.1/		Timer1_A3.TA1	1	1	0
Pin Osc		Capacitive sensing	X	0	1
P3.3/	3	P3.x (I/O)	I: 0; O: 1	0	0
TA1.2/		Timer1_A3.TA2	1	1	0
Pin Osc		Capacitive sensing	X	0	1
P3.4/	4	P3.x (I/O)	I: 0; O: 1	0	0
TA0.0/		Timer0_A3.TA0	1	1	0
Pin Osc		Capacitive sensing	X	0	1
P3.5/	5	P3.x (I/O)	I: 0; O: 1	0	0
TA0.1/		Timer0_A3.TA1	1	1	0
Pin Osc		Capacitive sensing	X	0	1
P3.6/	6	P3.x (I/O)	I: 0; O: 1	0	0
TA0.2/		Timer0_A3.TA2	1	1	0
Pin Osc		Capacitive sensing	X	0	1
P3.7/	7	P3.x (I/O)	I: 0; O: 1	0	0
TA1CLK/		Timer1_A3.TACLK	0	1	0
Pin Osc		Capacitive sensing	X	0	1

(1) X = don't care

7 Device and Documentation Support

7.1 Getting Started and Next Steps

For more information on the MSP430™ family of devices and the tools and libraries that are available to help with your development, visit the Getting Started page.

7.2 Device Nomenclature

To designate the stages in the product development cycle, TI assigns prefixes to the part numbers of all MSP430 MCU devices and support tools. Each MSP430 MCU commercial family member has one of three prefixes: MSP, PMS, or XMS (for example, MSP430F5438A). TI recommends two of three possible prefix designators for its support tools: MSP and MSPX. These prefixes represent evolutionary stages of product development from engineering prototypes (with XMS for devices and MSPX for tools) through fully qualified production devices and tools (with MSP for devices and MSP for tools).

Device development evolutionary flow:

XMS – Experimental device that is not necessarily representative of the electrical specifications for the final device

PMS – Final silicon die that conforms to the electrical specifications for the device but has not completed quality and reliability verification

MSP – Fully qualified production device

Support tool development evolutionary flow:

MSPX – Development-support product that has not yet completed TI's internal qualification testing.

MSP – Fully-qualified development-support product

XMS and PMS devices and MSPX development-support tools are shipped against the following disclaimer:

"Developmental product is intended for internal evaluation purposes."

MSP devices and MSP development-support tools have been characterized fully, and the quality and reliability of the device have been demonstrated fully. TI's standard warranty applies.

Predictions show that prototype devices (XMS and PMS) have a greater failure rate than the standard production devices. TI recommends that these devices not be used in any production system because their expected end-use failure rate still is undefined. Only qualified production devices are to be used.

TI device nomenclature also includes a suffix with the device family name. This suffix indicates the package type (for example, PZP) and temperature range (for example, T). Figure 7-1 provides a legend for reading the complete device name for any family member.

Copyright © 2011–2016, Texas Instruments Incorporated

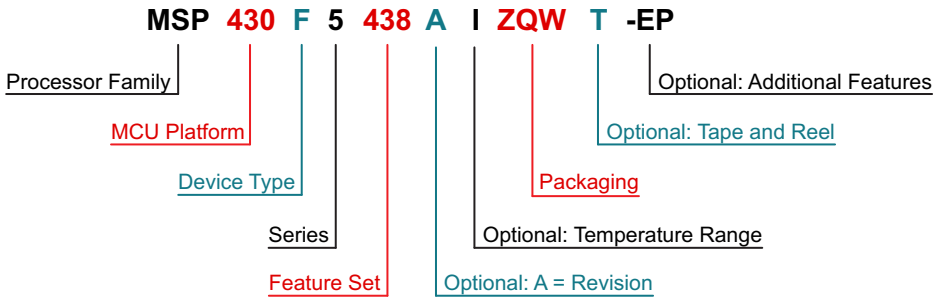

Processor Family	CC = Embedded RF Radio MSP = Mixed-Signal Processor XMS = Experimental Silicon PMS = Prototype Device	
MCU Platform	430 = MSP430 low-power microcontroller platform	
Device Type	**Memory Type** C = ROM F = Flash FR = FRAM G = Flash or FRAM (Value Line) L = No Nonvolatile Memory	**Specialized Application** AFE = Analog Front End BT = Preprogrammed with *Bluetooth* BQ = Contactless Power CG = ROM Medical FE = Flash Energy Meter FG = Flash Medical FW = Flash Electronic Flow Meter
Series	1 Series = Up to 8 MHz 2 Series = Up to 16 MHz 3 Series = Legacy 4 Series = Up to 16 MHz with LCD	5 Series = Up to 25 MHz 6 Series = Up to 25 MHz with LCD 0 = Low-Voltage Series
Feature Set	Various Levels of Integration Within a Series	
Optional: A = Revision	N/A	
Optional: Temperature Range	S = 0°C to 50°C C = 0°C to 70°C I = –40°C to 85°C T = –40°C to 105°C	
Packaging	http://www.ti.com/packaging	
Optional: Tape and Reel	T = Small Reel R = Large Reel No Markings = Tube or Tray	
Optional: Additional Features	-EP = Enhanced Product (–40°C to 105°C) -HT = Extreme Temperature Parts (–55°C to 150°C) -Q1 = Automotive Q100 Qualified	

Figure 7-1. Device Nomenclature

7.3 Tools and Software

All MSP microcontrollers are supported by a wide variety of software and hardware development tools. Tools are available from TI and various third parties. See them all at MSP Tools.

Table 7-1 lists the debug features of these devices. See the *Code Composer Studio for MSP430 User's Guide* (SLAU157) for details on the available features.

Table 7-1. Hardware Features

MSP430 ARCHITECTURE	4-WIRE JTAG	2-WIRE JTAG	BREAK-POINTS (N)	RANGE BREAK-POINTS	CLOCK CONTROL	STATE SEQUENCER	TRACE BUFFER	LPMx.5 DEBUGGING SUPPORT
MSP430	Yes	Yes	2	No	Yes	No	No	No

Design Kits and Evaluation Modules

28-Pin Target Development Board and MSP-FET USB Programmer Bundle for MSP430F2x and MSP430G2x MCUs The MSP-FET430U28A kit includes all of the hardware and software required to quickly begin application development on the MSP430 MCU. This kit includes a ZIF socket target board (MSP-TS430PW28A) that accepts some MSP430 devices in 20- or 28-pin TSSOP packages (TI Package Code: PW). It is also bundled with a USB flash emulation tool (MSP-FET) that interfaces the target board to a PC, allowing developers to program and debug their MSP430 devices through in-system emulation through the JTAG interface or the pin-saving Spy Bi-Wire (2-wire JTAG) protocol.

MSP430 LaunchPad™ Value Line Development Kit The MSP-EXP430G2 LaunchPad Development Kit is an easy-to-use microcontroller development board for the low-power and low-cost MSP430G2x MCUs. It has on-board emulation for programming and debugging and features a 14- or 20-pin DIP socket, on-board buttons and LEDs and BoosterPack Plug-in Module pinouts that support a wide range of modules for added functionality such as wireless, displays, and more.

MSP430 Capacitive Touch BoosterPack™ Plug-in Module The Capacitive Touch BoosterPack (430BOOST-SENSE1) is a plug-in module for MCU LaunchPad Development Kits. This BoosterPack also includes a preprogrammed MSP430G2452IN20 Value Line device for the MSP-EXP430G2 LaunchPad. Developers can use this BoosterPack as a solution for adding capacitive touch differentiation in many applications such as consumer electronics, point of sales machines, and other devices with a physical button.

Software

MSP430G2x53, MSP430G2x33, MSP430G2x13, MSP430G2x03 Code Examples C Code examples are available for every MSP device that configures each of the integrated peripherals for various application needs.

MSPWare™ Software MSPWare software is a collection of code examples, data sheets, and other design resources for all MSP devices delivered in a convenient package. In addition to providing a complete collection of existing MSP design resources, MSPWare software also includes a high-level API called MSP Driver Library. This library makes it easy to program MSP hardware. MSPWare software is available as a component of CCS or as a stand-alone package.

MSP Driver Library Driver Library's abstracted API keeps you above the bits and bytes of the MSP430 hardware by providing easy-to-use function calls. Thorough documentation is delivered through a helpful API Guide, which includes details on each function call and the recognized parameters. Developers can use Driver Library functions to write complete projects with minimal overhead.

Copyright © 2011–2016, Texas Instruments Incorporated

Capacitive Touch Software Library Free C libraries for enabling capacitive touch capabilities on MSP430 MCUs and MSP432 MCUs. The MSP430 MCU version of the library features several capacitive touch implementations including the RO and RC method.

MSP EnergyTrace™ Technology EnergyTrace technology for MSP430 microcontrollers is an energy-based code analysis tool that measures and displays the application's energy profile and helps to optimize it for ultra-low-power consumption.

ULP (Ultra-Low Power) Advisor ULP Advisor™ software is a tool for guiding developers to write more efficient code to fully utilize the unique ultra-low power features of MSP and MSP432 microcontrollers. Aimed at both experienced and new microcontroller developers, ULP Advisor checks your code against a thorough ULP checklist to squeeze every last nano amp out of your application. At build time, ULP Advisor will provide notifications and remarks to highlight areas of your code that can be further optimized for lower power.

IEC60730 Software Package The IEC60730 MSP430 software package was developed to be useful in assisting customers in complying with IEC 60730-1:2010 (Automatic Electrical Controls for Household and Similar Use – Part 1: General Requirements) for up to Class B products, which includes home appliances, arc detectors, power converters, power tools, e-bikes, and many others. The IEC60730 MSP430 software package can be embedded in customer applications running on MSP430s to help simplify the customer's certification efforts of functional safety-compliant consumer devices to IEC 60730-1:2010 Class B.

Fixed-Point Math Library for MSP The MSP IQmath and Qmath Libraries are a collection of highly optimized and high-precision mathematical functions for C programmers to seamlessly port a floating-point algorithm into fixed-point code on MSP430 and MSP432 devices. These routines are typically used in computationally intensive real-time applications where optimal execution speed, high accuracy, and ultra-low energy are critical. By using the IQmath and Qmath libraries, it is possible to achieve execution speeds considerably faster and energy consumption considerably lower than equivalent code written using floating-point math.

Development Tools

Code Composer Studio™ Integrated Development Environment for MSP Microcontrollers Code Composer Studio is an integrated development environment (IDE) that supports all MSP microcontroller devices. Code Composer Studio comprises a suite of embedded software utilities used to develop and debug embedded applications. It includes an optimizing C/C++ compiler, source code editor, project build environment, debugger, profiler, and many other features. The intuitive IDE provides a single user interface taking you through each step of the application development flow. Familiar utilities and interfaces allow users to get started faster than ever before. Code Composer Studio combines the advantages of the Eclipse software framework with advanced embedded debug capabilities from TI resulting in a compelling feature-rich development environment for embedded developers. When using CCS with an MSP MCU, a unique and powerful set of plugins and embedded software utilities are made available to fully leverage the MSP microcontroller.

Grace – Graphical Peripheral Configuration Tool Enable and configure ADCs, DACs, timers, clocks, serial communication interfaces, and more, by interacting with buttons, drop-down menus, and text fields. Navigate through the MSP430 MCUs highly integrated peripheral set with ease.

MSP Flasher - Command Line Programmer MSP Flasher is an open-source shell-based interface for programming MSP microcontrollers through a FET programmer or eZ430 using JTAG or Spy-Bi-Wire (SBW) communication. MSP Flasher can download binary files (.txt or .hex) files directly to the MSP microcontroller without an IDE.

MSP MCU Programmer and Debugger The MSP-FET is a powerful emulation development tool – often called a debug probe – which allows users to quickly begin application development on MSP low-power microcontrollers (MCU). Creating MCU software usually requires downloading the resulting binary program to the MSP device for validation and debugging. The MSP-FET provides a debug communication pathway between a host computer and the target MSP. Furthermore, the MSP-FET also provides a Backchannel UART connection between the computer's USB interface and the MSP UART. This affords the MSP programmer a convenient method for communicating serially between the MSP and a terminal running on the computer. It also supports loading programs (often called firmware) to the MSP target using the BSL (bootloader) through the UART and I^2C communication protocols.

MSP-GANG Production Programmer The MSP Gang Programmer is an MSP430 or MSP432 device programmer that can program up to eight identical MSP430 or MSP432 Flash or FRAM devices at the same time. The MSP Gang Programmer connects to a host PC using a standard RS-232 or USB connection and provides flexible programming options that allow the user to fully customize the process. The MSP Gang Programmer is provided with an expansion board, called the Gang Splitter, that implements the interconnections between the MSP Gang Programmer and multiple target devices. Eight cables are provided that connect the expansion board to eight target devices (through JTAG or Spy-Bi-Wire connectors). The programming can be done with a PC or as a stand-alone device. A PC-side graphical user interface is also available and is DLL-based.

7.4 Documentation Support

The following documents describe the MSP430G2x33 and MSP430G2x03 devices. Copies of these documents are available on the Internet at www.ti.com.

Receiving Notification of Document Updates

To receive notification of documentation updates—including silicon errata—go to the product folder for your device on ti.com (for example, MSP430G2533). In the upper right corner, click the "Alert me" button. This registers you to receive a weekly digest of product information that has changed (if any). For change details, check the revision history of any revised document.

Errata

MSP430G2533 Device Erratasheet Describes the known exceptions to the functional specifications for the MSP430G2533 device.

MSP430G2433 Device Erratasheet Describes the known exceptions to the functional specifications for the MSP430G2433 device.

MSP430G2333 Device Erratasheet Describes the known exceptions to the functional specifications for the MSP430G2333 device.

MSP430G2233 Device Erratasheet Describes the known exceptions to the functional specifications for the MSP430G2233 device.

MSP430G2403 Device Erratasheet Describes the known exceptions to the functional specifications for the MSP430G2403 device.

MSP430G2303 Device Erratasheet Describes the known exceptions to the functional specifications for the MSP430G2303 device.

MSP430G2203 Device Erratasheet Describes the known exceptions to the functional specifications for the MSP430G2203 device.

Copyright © 2011–2016, Texas Instruments Incorporated

User's Guides

MSP430x2xx Family User's Guide Detailed information on the modules and peripherals available in this device family.

Code Composer Studio v6.1 for MSP430 User's Guide This manual describes the use of TI Code Composer Studio IDE v6.1 (CCS v6.1) with the MSP430 ultra-low-power microcontrollers. This document applies only for the Windows version of the Code Composer Studio IDE. The Linux version is similar and, therefore, is not described separately.

IAR Embedded Workbench Version 3+ for MSP430 User's Guide This manual describes the use of IAR Embedded Workbench (EW430) with the MSP430 ultra-low-power microcontrollers.

MSP430 Programming With the Bootloader (BSL) The MSP430 bootloader (BSL, formerly known as the bootstrap loader) allows users to communicate with embedded memory in the MSP430 microcontroller during the prototyping phase, final production, and in service. Both the programmable memory (flash memory) and the data memory (RAM) can be modified as required. Do not confuse the bootloader with the bootstrap loader programs found in some digital signal processors (DSPs) that automatically load program code (and data) from external memory to the internal memory of the DSP.

MSP430 Programming Via the JTAG Interface This document describes the functions that are required to erase, program, and verify the memory module of the MSP430 flash-based and FRAM-based microcontroller families using the JTAG communication port. In addition, it describes how to program the JTAG access security fuse that is available on all MSP430 devices. This document describes device access using both the standard 4-wire JTAG interface and the 2-wire JTAG interface, which is also referred to as Spy-Bi-Wire (SBW).

MSP430 Hardware Tools User's Guide This manual describes the hardware of the TI MSP-FET430 Flash Emulation Tool (FET). The FET is the program development tool for the MSP430 ultra-low-power microcontroller. Both available interface types, the parallel port interface and the USB interface, are described.

Application Reports

MSP430 32-kHz Crystal Oscillators Selection of the right crystal, correct load circuit, and proper board layout are important for a stable crystal oscillator. This application report summarizes crystal oscillator function and explains the parameters to select the correct crystal for MSP430 ultra-low-power operation. In addition, hints and examples for correct board layout are given. The document also contains detailed information on the possible oscillator tests to ensure stable oscillator operation in mass production.

MSP430 System-Level ESD Considerations System-Level ESD has become increasingly demanding with silicon technology scaling towards lower voltages and the need for designing cost-effective and ultra-low-power components. This application report addresses three different ESD topics to help board designers and OEMs understand and design robust system-level designs: (1) Component-level ESD testing and system-level ESD testing, their differences and why component-level ESD rating does not ensure system-level robustness. (2) General design guidelines for system-level ESD protection at different levels including enclosures, cables, PCB layout, and on-board ESD protection devices. (3) Introduction to System Efficient ESD Design (SEED), a co-design methodology of on-board and on-chip ESD protection to achieve system-level ESD robustness, with example simulations and test results. A few real-world system-level ESD protection design examples and their results are also discussed.

General Oversampling of MSP ADCs for Higher Resolution Multiple MSP ultra-low-power microcontrollers offer analog-to-digital converters (ADCs) to convert physical quantities into digital numbers, a function that is widely used across numerous applications. There are times, however, when a customer design demands a higher resolution than the ADC of the selected MSP can offer. This application report, which is based on the previously-published Oversampling the ADC12 for Higher Resolution (SLAA323), therefore describes how an oversampling method can be incorporated to increase ADC resolution past the currently available number of bits.

Capacitive Touch Hardware Design Guide Capacitive touch detection is sometimes considered more art than science. This often results in multiple design iterations before the optimum performance is achieved. There are, however, good design practices for circuit layout and principles of materials that need to be understood to keep the number of iterations to a minimum. This design guide describes a process for creating and designing capacitive touch solutions, starting with the schematic, working through the mechanicals, and finally designing the electrodes for the application.

Capacitive Touch Sensing, MSP430 Slider and Wheel Tuning Guide This application report provides guidelines on how to tune capacitive touch sliders and wheels running on the MSP430™ microcontrollers. It identifies the hardware and software parameters as well as explains the steps used in tuning sliders and wheels. The slider and wheel tuning is based on the APIs defined in the Capacitive Touch Sense Library (CAPSENSELIBRARY).

Capacitive Touch Sensing, MSP430 Button Gate Time Optimization and Tuning Guide MSP430™ microcontroller based capacitive touch buttons can offer increased performance when properly optimized and tuned for their specific application. Performance benefits that result from button optimization can include, but are not limited to, decreased power consumption, improved response time, and the ability to grow a design to include more buttons. This application report provides the reader with a starting point for button design at the system and software level.

7.5 Related Links

Table 7-2 lists quick access links. Categories include technical documents, support and community resources, tools and software, and quick access to sample or buy.

Table 7-2. Related Links

PARTS	PRODUCT FOLDER	SAMPLE & BUY	TECHNICAL DOCUMENTS	TOOLS & SOFTWARE	SUPPORT & COMMUNITY
MSP430G2533	Click here	Click here	Click here	Click here	Click here
MSP430G2433	Click here	Click here	Click here	Click here	Click here
MSP430G2333	Click here	Click here	Click here	Click here	Click here
MSP430G2233	Click here	Click here	Click here	Click here	Click here
MSP430G2403	Click here	Click here	Click here	Click here	Click here
MSP430G2303	Click here	Click here	Click here	Click here	Click here
MSP430G2203	Click here	Click here	Click here	Click here	Click here

Copyright © 2011–2016, Texas Instruments Incorporated

7.6 Community Resources

The following links connect to TI community resources. Linked contents are provided "AS IS" by the respective contributors. They do not constitute TI specifications and do not necessarily reflect TI's views; see TI's Terms of Use.

TI E2E™ Community
TI's Engineer-to-Engineer (E2E) Community. Created to foster collaboration among engineers. At e2e.ti.com, you can ask questions, share knowledge, explore ideas, and help solve problems with fellow engineers.

TI Embedded Processors Wiki
Texas Instruments Embedded Processors Wiki. Established to help developers get started with embedded processors from Texas Instruments and to foster innovation and growth of general knowledge about the hardware and software surrounding these devices.

7.7 Trademarks

MSP430, LaunchPad, BoosterPack, MSPWare, EnergyTrace, ULP Advisor, Code Composer Studio, E2E are trademarks of Texas Instruments.
All other trademarks are the property of their respective owners.

7.8 Electrostatic Discharge Caution

These devices have limited built-in ESD protection. The leads should be shorted together or the device placed in conductive foam during storage or handling to prevent electrostatic damage to the MOS gates.

7.9 Glossary

TI Glossary This glossary lists and explains terms, acronyms, and definitions.

8 Mechanical, Packaging, and Orderable Information

The following pages include mechanical, packaging, and orderable information. This information is the most current data available for the designated devices. This data is subject to change without notice and revision of this document. For browser-based versions of this data sheet, refer to the left-hand navigation.

Copyright © 2011–2016, Texas Instruments Incorporated

PACKAGING INFORMATION

Orderable part number	Status (1)	Material type (2)	Package | Pins	Package qty | Carrier	RoHS (3)	Lead finish/ Ball material (4)	MSL rating/ Peak reflow (5)	Op temp (°C)	Part marking (6)
M430G2533IPW20RG4	Active	Production	TSSOP (PW) | 20	2000 | LARGE T&R	Yes	NIPDAU	Level-1-260C-UNLIM	-40 to 85	430G2533
M430G2533IPW20RG4.A	Active	Production	TSSOP (PW) | 20	2000 | LARGE T&R	Yes	NIPDAU	Level-1-260C-UNLIM	-40 to 85	430G2533
M430G2533IPW20RG4.B	Active	Production	TSSOP (PW) | 20	2000 | LARGE T&R	Yes	NIPDAU	Level-1-260C-UNLIM	-40 to 85	430G2533
MSP430G2203IN20	Active	Production	PDIP (N) | 20	20 | TUBE	Yes	NIPDAU	Level-1-260C-UNLIM	-40 to 85	M430G2203
MSP430G2203IN20.A	Active	Production	PDIP (N) | 20	20 | TUBE	Yes	NIPDAU	Level-1-260C-UNLIM	-40 to 85	M430G2203
MSP430G2203IN20.B	Active	Production	PDIP (N) | 20	20 | TUBE	Yes	NIPDAU	Level-1-260C-UNLIM	-40 to 85	M430G2203
MSP430G2203IPW20	Active	Production	TSSOP (PW) | 20	70 | TUBE	Yes	NIPDAU	Level-1-260C-UNLIM	-40 to 85	430G2203
MSP430G2203IPW20.A	Active	Production	TSSOP (PW) | 20	70 | TUBE	Yes	NIPDAU	Level-1-260C-UNLIM	-40 to 85	430G2203
MSP430G2203IPW20.B	Active	Production	TSSOP (PW) | 20	70 | TUBE	Yes	NIPDAU	Level-1-260C-UNLIM	-40 to 85	430G2203
MSP430G2203IPW20R	Active	Production	TSSOP (PW) | 20	2000 | LARGE T&R	Yes	NIPDAU	Level-1-260C-UNLIM	-40 to 85	430G2203
MSP430G2203IPW20R.A	Active	Production	TSSOP (PW) | 20	2000 | LARGE T&R	Yes	NIPDAU	Level-1-260C-UNLIM	-40 to 85	430G2203
MSP430G2203IPW20R.B	Active	Production	TSSOP (PW) | 20	2000 | LARGE T&R	Yes	NIPDAU	Level-1-260C-UNLIM	-40 to 85	430G2203
MSP430G2203IPW28	Active	Production	TSSOP (PW) | 28	50 | TUBE	Yes	NIPDAU	Level-1-260C-UNLIM	-40 to 85	430G2203
MSP430G2203IPW28.A	Active	Production	TSSOP (PW) | 28	50 | TUBE	Yes	NIPDAU	Level-1-260C-UNLIM	-40 to 85	430G2203
MSP430G2203IPW28.B	Active	Production	TSSOP (PW) | 28	50 | TUBE	Yes	NIPDAU	Level-1-260C-UNLIM	-40 to 85	430G2203
MSP430G2203IPW28R	Active	Production	TSSOP (PW) | 28	2000 | LARGE T&R	Yes	NIPDAU	Level-1-260C-UNLIM	-40 to 85	430G2203
MSP430G2203IPW28R.A	Active	Production	TSSOP (PW) | 28	2000 | LARGE T&R	Yes	NIPDAU	Level-1-260C-UNLIM	-40 to 85	430G2203
MSP430G2203IPW28R.B	Active	Production	TSSOP (PW) | 28	2000 | LARGE T&R	Yes	NIPDAU	Level-1-260C-UNLIM	-40 to 85	430G2203
MSP430G2203IRHB32R	Active	Production	VQFN (RHB) | 32	3000 | LARGE T&R	Yes	NIPDAU | SN	Level-2-260C-1 YEAR	-40 to 85	MSP430 G2203
MSP430G2203IRHB32R.A	Active	Production	VQFN (RHB) | 32	3000 | LARGE T&R	Yes	NIPDAU	Level-2-260C-1 YEAR	-40 to 85	MSP430 G2203
MSP430G2203IRHB32R.B	Active	Production	VQFN (RHB) | 32	3000 | LARGE T&R	Yes	NIPDAU	Level-2-260C-1 YEAR	-40 to 85	MSP430 G2203
MSP430G2203IRHB32T	Active	Production	VQFN (RHB) | 32	250 | SMALL T&R	Yes	NIPDAU | SN	Level-2-260C-1 YEAR	-40 to 85	MSP430 G2203
MSP430G2203IRHB32T.A	Active	Production	VQFN (RHB) | 32	250 | SMALL T&R	Yes	NIPDAU	Level-2-260C-1 YEAR	-40 to 85	MSP430 G2203
MSP430G2203IRHB32T.B	Active	Production	VQFN (RHB) | 32	250 | SMALL T&R	Yes	NIPDAU	Level-2-260C-1 YEAR	-40 to 85	MSP430 G2203
MSP430G2233IN20	Active	Production	PDIP (N) | 20	20 | TUBE	Yes	NIPDAU	Level-1-260C-UNLIM	-40 to 85	M430G2233

Orderable part number	Status (1)	Material type (2)	Package | Pins	Package qty | Carrier	RoHS (3)	Lead finish/ Ball material (4)	MSL rating/ Peak reflow (5)	Op temp (°C)	Part marking (6)
MSP430G2233IN20.A	Active	Production	PDIP (N) | 20	20 | TUBE	Yes	NIPDAU	Level-1-260C-UNLIM	-40 to 85	M430G2233
MSP430G2233IN20.B	Active	Production	PDIP (N) | 20	20 | TUBE	Yes	NIPDAU	Level-1-260C-UNLIM	-40 to 85	M430G2233
MSP430G2233IPW20	Active	Production	TSSOP (PW) | 20	70 | TUBE	Yes	NIPDAU	Level-1-260C-UNLIM	-40 to 85	430G2233
MSP430G2233IPW20.A	Active	Production	TSSOP (PW) | 20	70 | TUBE	Yes	NIPDAU	Level-1-260C-UNLIM	-40 to 85	430G2233
MSP430G2233IPW20.B	Active	Production	TSSOP (PW) | 20	70 | TUBE	Yes	NIPDAU	Level-1-260C-UNLIM	-40 to 85	430G2233
MSP430G2233IPW20R	Active	Production	TSSOP (PW) | 20	2000 | LARGE T&R	Yes	NIPDAU	Level-1-260C-UNLIM	-40 to 85	430G2233
MSP430G2233IPW20R.A	Active	Production	TSSOP (PW) | 20	2000 | LARGE T&R	Yes	NIPDAU	Level-1-260C-UNLIM	-40 to 85	430G2233
MSP430G2233IPW20R.B	Active	Production	TSSOP (PW) | 20	2000 | LARGE T&R	Yes	NIPDAU	Level-1-260C-UNLIM	-40 to 85	430G2233
MSP430G2233IPW28	Active	Production	TSSOP (PW) | 28	50 | TUBE	Yes	NIPDAU	Level-1-260C-UNLIM	-40 to 85	430G2233
MSP430G2233IPW28.A	Active	Production	TSSOP (PW) | 28	50 | TUBE	Yes	NIPDAU	Level-1-260C-UNLIM	-40 to 85	430G2233
MSP430G2233IPW28.B	Active	Production	TSSOP (PW) | 28	50 | TUBE	Yes	NIPDAU	Level-1-260C-UNLIM	-40 to 85	430G2233
MSP430G2233IPW28R	Active	Production	TSSOP (PW) | 28	2000 | LARGE T&R	Yes	NIPDAU	Level-1-260C-UNLIM	-40 to 85	430G2233
MSP430G2233IPW28R.A	Active	Production	TSSOP (PW) | 28	2000 | LARGE T&R	Yes	NIPDAU	Level-1-260C-UNLIM	-40 to 85	430G2233
MSP430G2233IPW28R.B	Active	Production	TSSOP (PW) | 28	2000 | LARGE T&R	Yes	NIPDAU	Level-1-260C-UNLIM	-40 to 85	430G2233
MSP430G2233IRHB32R	Active	Production	VQFN (RHB) | 32	3000 | LARGE T&R	Yes	NIPDAU | SN	Level-2-260C-1 YEAR	-40 to 85	MSP430 G2233
MSP430G2233IRHB32R.A	Active	Production	VQFN (RHB) | 32	3000 | LARGE T&R	Yes	NIPDAU	Level-2-260C-1 YEAR	-40 to 85	MSP430 G2233
MSP430G2233IRHB32R.B	Active	Production	VQFN (RHB) | 32	3000 | LARGE T&R	Yes	NIPDAU	Level-2-260C-1 YEAR	-40 to 85	MSP430 G2233
MSP430G2233IRHB32T	Active	Production	VQFN (RHB) | 32	250 | SMALL T&R	Yes	NIPDAU | SN	Level-2-260C-1 YEAR	-40 to 85	MSP430 G2233
MSP430G2233IRHB32T.A	Active	Production	VQFN (RHB) | 32	250 | SMALL T&R	Yes	NIPDAU	Level-2-260C-1 YEAR	-40 to 85	MSP430 G2233
MSP430G2233IRHB32T.B	Active	Production	VQFN (RHB) | 32	250 | SMALL T&R	Yes	NIPDAU	Level-2-260C-1 YEAR	-40 to 85	MSP430 G2233
MSP430G2303IPW20	Active	Production	TSSOP (PW) | 20	70 | TUBE	Yes	NIPDAU	Level-1-260C-UNLIM	-40 to 85	430G2303
MSP430G2303IPW20.A	Active	Production	TSSOP (PW) | 20	70 | TUBE	Yes	NIPDAU	Level-1-260C-UNLIM	-40 to 85	430G2303
MSP430G2303IPW20.B	Active	Production	TSSOP (PW) | 20	70 | TUBE	Yes	NIPDAU	Level-1-260C-UNLIM	-40 to 85	430G2303
MSP430G2303IPW20R	Active	Production	TSSOP (PW) | 20	2000 | LARGE T&R	Yes	NIPDAU	Level-1-260C-UNLIM	-40 to 85	430G2303
MSP430G2303IPW20R.A	Active	Production	TSSOP (PW) | 20	2000 | LARGE T&R	Yes	NIPDAU	Level-1-260C-UNLIM	-40 to 85	430G2303
MSP430G2303IPW20R.B	Active	Production	TSSOP (PW) | 20	2000 | LARGE T&R	Yes	NIPDAU	Level-1-260C-UNLIM	-40 to 85	430G2303

Orderable part number	Status (1)	Material type (2)	Package | Pins	Package qty | Carrier	RoHS (3)	Lead finish/ Ball material (4)	MSL rating/ Peak reflow (5)	Op temp (°C)	Part marking (6)
MSP430G2303IPW28	Active	Production	TSSOP (PW) | 28	50 | TUBE	Yes	NIPDAU	Level-1-260C-UNLIM	-40 to 85	430G2303
MSP430G2303IPW28.A	Active	Production	TSSOP (PW) | 28	50 | TUBE	Yes	NIPDAU	Level-1-260C-UNLIM	-40 to 85	430G2303
MSP430G2303IPW28.B	Active	Production	TSSOP (PW) | 28	50 | TUBE	Yes	NIPDAU	Level-1-260C-UNLIM	-40 to 85	430G2303
MSP430G2303IPW28R	Active	Production	TSSOP (PW) | 28	2000 | LARGE T&R	Yes	NIPDAU	Level-1-260C-UNLIM	-40 to 85	430G2303
MSP430G2303IPW28R.A	Active	Production	TSSOP (PW) | 28	2000 | LARGE T&R	Yes	NIPDAU	Level-1-260C-UNLIM	-40 to 85	430G2303
MSP430G2303IPW28R.B	Active	Production	TSSOP (PW) | 28	2000 | LARGE T&R	Yes	NIPDAU	Level-1-260C-UNLIM	-40 to 85	430G2303
MSP430G2303IRHB32R	Active	Production	VQFN (RHB) | 32	3000 | LARGE T&R	Yes	NIPDAU | SN	Level-2-260C-1 YEAR	-40 to 85	MSP430 G2303
MSP430G2303IRHB32R.A	Active	Production	VQFN (RHB) | 32	3000 | LARGE T&R	Yes	NIPDAU	Level-2-260C-1 YEAR	-40 to 85	MSP430 G2303
MSP430G2303IRHB32R.B	Active	Production	VQFN (RHB) | 32	3000 | LARGE T&R	Yes	NIPDAU	Level-2-260C-1 YEAR	-40 to 85	MSP430 G2303
MSP430G2303IRHB32T	Active	Production	VQFN (RHB) | 32	250 | SMALL T&R	Yes	NIPDAU | SN	Level-2-260C-1 YEAR	-40 to 85	MSP430 G2303
MSP430G2303IRHB32T.A	Active	Production	VQFN (RHB) | 32	250 | SMALL T&R	Yes	NIPDAU	Level-2-260C-1 YEAR	-40 to 85	MSP430 G2303
MSP430G2303IRHB32T.B	Active	Production	VQFN (RHB) | 32	250 | SMALL T&R	Yes	NIPDAU	Level-2-260C-1 YEAR	-40 to 85	MSP430 G2303
MSP430G2333IN20	Active	Production	PDIP (N) | 20	20 | TUBE	Yes	NIPDAU	Level-1-260C-UNLIM	-40 to 85	M430G2333
MSP430G2333IN20.A	Active	Production	PDIP (N) | 20	20 | TUBE	Yes	NIPDAU	Level-1-260C-UNLIM	-40 to 85	M430G2333
MSP430G2333IN20.B	Active	Production	PDIP (N) | 20	20 | TUBE	Yes	NIPDAU	Level-1-260C-UNLIM	-40 to 85	M430G2333
MSP430G2333IPW20	Active	Production	TSSOP (PW) | 20	70 | TUBE	Yes	NIPDAU	Level-1-260C-UNLIM	-40 to 85	430G2333
MSP430G2333IPW20.A	Active	Production	TSSOP (PW) | 20	70 | TUBE	Yes	NIPDAU	Level-1-260C-UNLIM	-40 to 85	430G2333
MSP430G2333IPW20.B	Active	Production	TSSOP (PW) | 20	70 | TUBE	Yes	NIPDAU	Level-1-260C-UNLIM	-40 to 85	430G2333
MSP430G2333IPW20R	Active	Production	TSSOP (PW) | 20	2000 | LARGE T&R	Yes	NIPDAU	Level-1-260C-UNLIM	-40 to 85	430G2333
MSP430G2333IPW20R.A	Active	Production	TSSOP (PW) | 20	2000 | LARGE T&R	Yes	NIPDAU	Level-1-260C-UNLIM	-40 to 85	430G2333
MSP430G2333IPW20R.B	Active	Production	TSSOP (PW) | 20	2000 | LARGE T&R	Yes	NIPDAU	Level-1-260C-UNLIM	-40 to 85	430G2333
MSP430G2333IPW28	Active	Production	TSSOP (PW) | 28	50 | TUBE	Yes	NIPDAU	Level-1-260C-UNLIM	-40 to 85	430G2333
MSP430G2333IPW28.A	Active	Production	TSSOP (PW) | 28	50 | TUBE	Yes	NIPDAU	Level-1-260C-UNLIM	-40 to 85	430G2333
MSP430G2333IPW28.B	Active	Production	TSSOP (PW) | 28	50 | TUBE	Yes	NIPDAU	Level-1-260C-UNLIM	-40 to 85	430G2333
MSP430G2333IPW28R	Active	Production	TSSOP (PW) | 28	2000 | LARGE T&R	Yes	NIPDAU	Level-1-260C-UNLIM	-40 to 85	430G2333
MSP430G2333IPW28R.A	Active	Production	TSSOP (PW) | 28	2000 | LARGE T&R	Yes	NIPDAU	Level-1-260C-UNLIM	-40 to 85	430G2333

Orderable part number	Status (1)	Material type (2)	Package | Pins	Package qty | Carrier	RoHS (3)	Lead finish/ Ball material (4)	MSL rating/ Peak reflow (5)	Op temp (°C)	Part marking (6)
MSP430G2333IPW28R.B	Active	Production	TSSOP (PW) | 28	2000 | LARGE T&R	Yes	NIPDAU	Level-1-260C-UNLIM	-40 to 85	430G2333
MSP430G2333IRHB32R	Active	Production	VQFN (RHB) | 32	3000 | LARGE T&R	Yes	NIPDAU | SN	Level-2-260C-1 YEAR	-40 to 85	MSP430 G2333
MSP430G2333IRHB32R.A	Active	Production	VQFN (RHB) | 32	3000 | LARGE T&R	Yes	NIPDAU	Level-2-260C-1 YEAR	-40 to 85	MSP430 G2333
MSP430G2333IRHB32R.B	Active	Production	VQFN (RHB) | 32	3000 | LARGE T&R	Yes	NIPDAU	Level-2-260C-1 YEAR	-40 to 85	MSP430 G2333
MSP430G2333IRHB32T	Active	Production	VQFN (RHB) | 32	250 | SMALL T&R	Yes	NIPDAU | SN	Level-2-260C-1 YEAR	-40 to 85	MSP430 G2333
MSP430G2333IRHB32T.A	Active	Production	VQFN (RHB) | 32	250 | SMALL T&R	Yes	NIPDAU	Level-2-260C-1 YEAR	-40 to 85	MSP430 G2333
MSP430G2333IRHB32T.B	Active	Production	VQFN (RHB) | 32	250 | SMALL T&R	Yes	NIPDAU	Level-2-260C-1 YEAR	-40 to 85	MSP430 G2333
MSP430G2403IN20	Active	Production	PDIP (N) | 20	20 | TUBE	Yes	NIPDAU	Level-1-260C-UNLIM	-40 to 85	M430G2403
MSP430G2403IN20.A	Active	Production	PDIP (N) | 20	20 | TUBE	Yes	NIPDAU	Level-1-260C-UNLIM	-40 to 85	M430G2403
MSP430G2403IN20.B	Active	Production	PDIP (N) | 20	20 | TUBE	Yes	NIPDAU	Level-1-260C-UNLIM	-40 to 85	M430G2403
MSP430G2403IPW20	Active	Production	TSSOP (PW) | 20	70 | TUBE	Yes	NIPDAU	Level-1-260C-UNLIM	-40 to 85	430G2403
MSP430G2403IPW20.A	Active	Production	TSSOP (PW) | 20	70 | TUBE	Yes	NIPDAU	Level-1-260C-UNLIM	-40 to 85	430G2403
MSP430G2403IPW20.B	Active	Production	TSSOP (PW) | 20	70 | TUBE	Yes	NIPDAU	Level-1-260C-UNLIM	-40 to 85	430G2403
MSP430G2403IPW20R	Active	Production	TSSOP (PW) | 20	2000 | LARGE T&R	Yes	NIPDAU	Level-1-260C-UNLIM	-40 to 85	430G2403
MSP430G2403IPW20R.A	Active	Production	TSSOP (PW) | 20	2000 | LARGE T&R	Yes	NIPDAU	Level-1-260C-UNLIM	-40 to 85	430G2403
MSP430G2403IPW20R.B	Active	Production	TSSOP (PW) | 20	2000 | LARGE T&R	Yes	NIPDAU	Level-1-260C-UNLIM	-40 to 85	430G2403
MSP430G2403IPW28	Active	Production	TSSOP (PW) | 28	50 | TUBE	Yes	NIPDAU	Level-1-260C-UNLIM	-40 to 85	430G2403
MSP430G2403IPW28.A	Active	Production	TSSOP (PW) | 28	50 | TUBE	Yes	NIPDAU	Level-1-260C-UNLIM	-40 to 85	430G2403
MSP430G2403IPW28.B	Active	Production	TSSOP (PW) | 28	50 | TUBE	Yes	NIPDAU	Level-1-260C-UNLIM	-40 to 85	430G2403
MSP430G2403IPW28R	Active	Production	TSSOP (PW) | 28	2000 | LARGE T&R	Yes	NIPDAU	Level-1-260C-UNLIM	-40 to 85	430G2403
MSP430G2403IPW28R.A	Active	Production	TSSOP (PW) | 28	2000 | LARGE T&R	Yes	NIPDAU	Level-1-260C-UNLIM	-40 to 85	430G2403
MSP430G2403IPW28R.B	Active	Production	TSSOP (PW) | 28	2000 | LARGE T&R	Yes	NIPDAU	Level-1-260C-UNLIM	-40 to 85	430G2403
MSP430G2403IRHB32R	Active	Production	VQFN (RHB) | 32	3000 | LARGE T&R	Yes	NIPDAU | SN	Level-2-260C-1 YEAR	-40 to 85	MSP430 G2403
MSP430G2403IRHB32R.A	Active	Production	VQFN (RHB) | 32	3000 | LARGE T&R	Yes	NIPDAU	Level-2-260C-1 YEAR	-40 to 85	MSP430 G2403

Orderable part number	Status (1)	Material type (2)	Package | Pins	Package qty | Carrier	RoHS (3)	Lead finish/ Ball material (4)	MSL rating/ Peak reflow (5)	Op temp (°C)	Part marking (6)
MSP430G2403IRHB32R.B	Active	Production	VQFN (RHB) | 32	3000 | LARGE T&R	Yes	NIPDAU	Level-2-260C-1 YEAR	-40 to 85	MSP430 G2403
MSP430G2403IRHB32T	Active	Production	VQFN (RHB) | 32	250 | SMALL T&R	Yes	NIPDAU | SN	Level-2-260C-1 YEAR	-40 to 85	MSP430 G2403
MSP430G2403IRHB32T.A	Active	Production	VQFN (RHB) | 32	250 | SMALL T&R	Yes	NIPDAU	Level-2-260C-1 YEAR	-40 to 85	MSP430 G2403
MSP430G2403IRHB32T.B	Active	Production	VQFN (RHB) | 32	250 | SMALL T&R	Yes	NIPDAU	Level-2-260C-1 YEAR	-40 to 85	MSP430 G2403
MSP430G2433IN20	Active	Production	PDIP (N) | 20	20 | TUBE	Yes	NIPDAU	Level-1-260C-UNLIM	-40 to 85	M430G2433
MSP430G2433IN20.A	Active	Production	PDIP (N) | 20	20 | TUBE	Yes	NIPDAU	Level-1-260C-UNLIM	-40 to 85	M430G2433
MSP430G2433IN20.B	Active	Production	PDIP (N) | 20	20 | TUBE	Yes	NIPDAU	Level-1-260C-UNLIM	-40 to 85	M430G2433
MSP430G2433IPW20	Active	Production	TSSOP (PW) | 20	70 | TUBE	Yes	NIPDAU	Level-1-260C-UNLIM	-40 to 85	430G2433
MSP430G2433IPW20.A	Active	Production	TSSOP (PW) | 20	70 | TUBE	Yes	NIPDAU	Level-1-260C-UNLIM	-40 to 85	430G2433
MSP430G2433IPW20.B	Active	Production	TSSOP (PW) | 20	70 | TUBE	Yes	NIPDAU	Level-1-260C-UNLIM	-40 to 85	430G2433
MSP430G2433IPW20R	Active	Production	TSSOP (PW) | 20	2000 | LARGE T&R	Yes	NIPDAU	Level-1-260C-UNLIM	-40 to 85	430G2433
MSP430G2433IPW20R.A	Active	Production	TSSOP (PW) | 20	2000 | LARGE T&R	Yes	NIPDAU	Level-1-260C-UNLIM	-40 to 85	430G2433
MSP430G2433IPW20R.B	Active	Production	TSSOP (PW) | 20	2000 | LARGE T&R	Yes	NIPDAU	Level-1-260C-UNLIM	-40 to 85	430G2433
MSP430G2433IPW28	Active	Production	TSSOP (PW) | 28	50 | TUBE	Yes	NIPDAU	Level-1-260C-UNLIM	-40 to 85	430G2433
MSP430G2433IPW28.A	Active	Production	TSSOP (PW) | 28	50 | TUBE	Yes	NIPDAU	Level-1-260C-UNLIM	-40 to 85	430G2433
MSP430G2433IPW28.B	Active	Production	TSSOP (PW) | 28	50 | TUBE	Yes	NIPDAU	Level-1-260C-UNLIM	-40 to 85	430G2433
MSP430G2433IPW28R	Active	Production	TSSOP (PW) | 28	2000 | LARGE T&R	Yes	NIPDAU	Level-1-260C-UNLIM	-40 to 85	430G2433
MSP430G2433IPW28R.A	Active	Production	TSSOP (PW) | 28	2000 | LARGE T&R	Yes	NIPDAU	Level-1-260C-UNLIM	-40 to 85	430G2433
MSP430G2433IPW28R.B	Active	Production	TSSOP (PW) | 28	2000 | LARGE T&R	Yes	NIPDAU	Level-1-260C-UNLIM	-40 to 85	430G2433
MSP430G2433IRHB32R	Active	Production	VQFN (RHB) | 32	3000 | LARGE T&R	Yes	NIPDAU | SN	Level-2-260C-1 YEAR	-40 to 85	MSP430 G2433
MSP430G2433IRHB32R.A	Active	Production	VQFN (RHB) | 32	3000 | LARGE T&R	Yes	NIPDAU	Level-2-260C-1 YEAR	-40 to 85	MSP430 G2433
MSP430G2433IRHB32R.B	Active	Production	VQFN (RHB) | 32	3000 | LARGE T&R	Yes	NIPDAU	Level-2-260C-1 YEAR	-40 to 85	MSP430 G2433
MSP430G2433IRHB32T	Active	Production	VQFN (RHB) | 32	250 | SMALL T&R	Yes	NIPDAU | SN	Level-2-260C-1 YEAR	-40 to 85	MSP430 G2433
MSP430G2433IRHB32T.A	Active	Production	VQFN (RHB) | 32	250 | SMALL T&R	Yes	NIPDAU	Level-2-260C-1 YEAR	-40 to 85	MSP430 G2433

Orderable part number	Status (1)	Material type (2)	Package | Pins	Package qty | Carrier	RoHS (3)	Lead finish/ Ball material (4)	MSL rating/ Peak reflow (5)	Op temp (°C)	Part marking (6)
MSP430G2433IRHB32T.B	Active	Production	VQFN (RHB) | 32	250 | SMALL T&R	Yes	NIPDAU	Level-2-260C-1 YEAR	-40 to 85	MSP430 G2433
MSP430G2533IN20	Active	Production	PDIP (N) | 20	20 | TUBE	Yes	NIPDAU	Level-1-260C-UNLIM	-40 to 85	M430G2533
MSP430G2533IN20.A	Active	Production	PDIP (N) | 20	20 | TUBE	Yes	NIPDAU	Level-1-260C-UNLIM	-40 to 85	M430G2533
MSP430G2533IN20.B	Active	Production	PDIP (N) | 20	20 | TUBE	Yes	NIPDAU	Level-1-260C-UNLIM	-40 to 85	M430G2533
MSP430G2533IPW20	Active	Production	TSSOP (PW) | 20	70 | TUBE	Yes	NIPDAU	Level-1-260C-UNLIM	-40 to 85	430G2533
MSP430G2533IPW20.A	Active	Production	TSSOP (PW) | 20	70 | TUBE	Yes	NIPDAU	Level-1-260C-UNLIM	-40 to 85	430G2533
MSP430G2533IPW20.B	Active	Production	TSSOP (PW) | 20	70 | TUBE	Yes	NIPDAU	Level-1-260C-UNLIM	-40 to 85	430G2533
MSP430G2533IPW20R	Active	Production	TSSOP (PW) | 20	2000 | LARGE T&R	Yes	NIPDAU	Level-1-260C-UNLIM	-40 to 85	430G2533
MSP430G2533IPW20R.A	Active	Production	TSSOP (PW) | 20	2000 | LARGE T&R	Yes	NIPDAU	Level-1-260C-UNLIM	-40 to 85	430G2533
MSP430G2533IPW20R.B	Active	Production	TSSOP (PW) | 20	2000 | LARGE T&R	Yes	NIPDAU	Level-1-260C-UNLIM	-40 to 85	430G2533
MSP430G2533IPW28	Active	Production	TSSOP (PW) | 28	50 | TUBE	Yes	NIPDAU	Level-1-260C-UNLIM	-40 to 85	430G2533
MSP430G2533IPW28.A	Active	Production	TSSOP (PW) | 28	50 | TUBE	Yes	NIPDAU	Level-1-260C-UNLIM	-40 to 85	430G2533
MSP430G2533IPW28.B	Active	Production	TSSOP (PW) | 28	50 | TUBE	Yes	NIPDAU	Level-1-260C-UNLIM	-40 to 85	430G2533
MSP430G2533IPW28R	Active	Production	TSSOP (PW) | 28	2000 | LARGE T&R	Yes	NIPDAU	Level-1-260C-UNLIM	-40 to 85	430G2533
MSP430G2533IPW28R.A	Active	Production	TSSOP (PW) | 28	2000 | LARGE T&R	Yes	NIPDAU	Level-1-260C-UNLIM	-40 to 85	430G2533
MSP430G2533IPW28R.B	Active	Production	TSSOP (PW) | 28	2000 | LARGE T&R	Yes	NIPDAU	Level-1-260C-UNLIM	-40 to 85	430G2533
MSP430G2533IRHB32R	Active	Production	VQFN (RHB) | 32	3000 | LARGE T&R	Yes	NIPDAU | SN	Level-2-260C-1 YEAR	-40 to 85	MSP430 G2533
MSP430G2533IRHB32R.A	Active	Production	VQFN (RHB) | 32	3000 | LARGE T&R	Yes	NIPDAU	Level-2-260C-1 YEAR	-40 to 85	MSP430 G2533
MSP430G2533IRHB32R.B	Active	Production	VQFN (RHB) | 32	3000 | LARGE T&R	Yes	NIPDAU	Level-2-260C-1 YEAR	-40 to 85	MSP430 G2533
MSP430G2533IRHB32T	Active	Production	VQFN (RHB) | 32	250 | SMALL T&R	Yes	NIPDAU | SN	Level-2-260C-1 YEAR	-40 to 85	MSP430 G2533
MSP430G2533IRHB32T.A	Active	Production	VQFN (RHB) | 32	250 | SMALL T&R	Yes	NIPDAU	Level-2-260C-1 YEAR	-40 to 85	MSP430 G2533
MSP430G2533IRHB32T.B	Active	Production	VQFN (RHB) | 32	250 | SMALL T&R	Yes	NIPDAU	Level-2-260C-1 YEAR	-40 to 85	MSP430 G2533

(1) **Status:** For more details on status, see our product life cycle.

(2) **Material type:** When designated, preproduction parts are prototypes/experimental devices, and are not yet approved or released for full production. Testing and final process, including without limitation quality assurance, reliability performance testing, and/or process qualification, may not yet be complete, and this item is subject to further changes or possible discontinuation. If available for ordering, purchases will be subject to an additional waiver at checkout, and are intended for early internal evaluation purposes only. These items are sold without warranties of any kind.

(3) **RoHS values:** Yes, No, RoHS Exempt. See the TI RoHS Statement for additional information and value definition.

(4) **Lead finish/Ball material:** Parts may have multiple material finish options. Finish options are separated by a vertical ruled line. Lead finish/Ball material values may wrap to two lines if the finish value exceeds the maximum column width.

(5) **MSL rating/Peak reflow:** The moisture sensitivity level ratings and peak solder (reflow) temperatures. In the event that a part has multiple moisture sensitivity ratings, only the lowest level per JEDEC standards is shown. Refer to the shipping label for the actual reflow temperature that will be used to mount the part to the printed circuit board.

(6) **Part marking:** There may be an additional marking, which relates to the logo, the lot trace code information, or the environmental category of the part.

Multiple part markings will be inside parentheses. Only one part marking contained in parentheses and separated by a "~" will appear on a part. If a line is indented then it is a continuation of the previous line and the two combined represent the entire part marking for that device.

Important Information and Disclaimer: The information provided on this page represents TI's knowledge and belief as of the date that it is provided. TI bases its knowledge and belief on information provided by third parties, and makes no representation or warranty as to the accuracy of such information. Efforts are underway to better integrate information from third parties. TI has taken and continues to take reasonable steps to provide representative and accurate information but may not have conducted destructive testing or chemical analysis on incoming materials and chemicals. TI and TI suppliers consider certain information to be proprietary, and thus CAS numbers and other limited information may not be available for release.

In no event shall TI's liability arising out of such information exceed the total purchase price of the TI part(s) at issue in this document sold by TI to Customer on an annual basis.

TAPE AND REEL INFORMATION

REEL DIMENSIONS

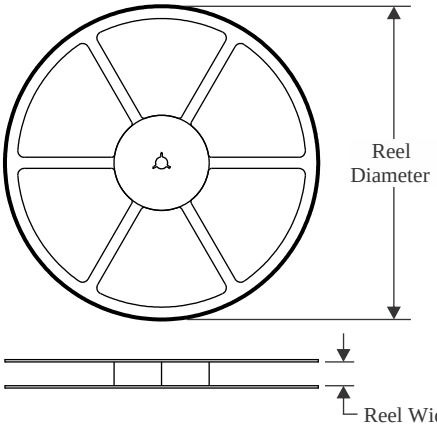

TAPE DIMENSIONS

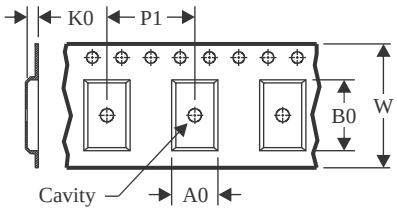

A0	Dimension designed to accommodate the component width
B0	Dimension designed to accommodate the component length
K0	Dimension designed to accommodate the component thickness
W	Overall width of the carrier tape
P1	Pitch between successive cavity centers

QUADRANT ASSIGNMENTS FOR PIN 1 ORIENTATION IN TAPE

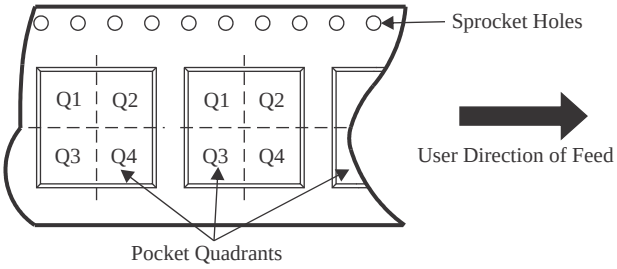

*All dimensions are nominal

Device	Package Type	Package Drawing	Pins	SPQ	Reel Diameter (mm)	Reel Width W1 (mm)	A0 (mm)	B0 (mm)	K0 (mm)	P1 (mm)	W (mm)	Pin1 Quadrant
M430G2533IPW20RG4	TSSOP	PW	20	2000	330.0	16.4	6.95	7.0	1.4	8.0	16.0	Q1
MSP430G2203IPW20R	TSSOP	PW	20	2000	330.0	16.4	6.95	7.1	1.6	8.0	16.0	Q1
MSP430G2203IPW20R	TSSOP	PW	20	2000	330.0	16.4	6.95	7.0	1.4	8.0	16.0	Q1
MSP430G2203IPW28R	TSSOP	PW	28	2000	330.0	16.4	6.9	10.2	1.8	12.0	16.0	Q1
MSP430G2203IPW28R	TSSOP	PW	28	2000	330.0	16.4	6.75	10.1	1.8	12.0	16.0	Q1
MSP430G2203IRHB32R	VQFN	RHB	32	3000	330.0	12.4	5.3	5.3	1.1	8.0	12.0	Q2
MSP430G2203IRHB32R	VQFN	RHB	32	3000	330.0	12.4	5.3	5.3	1.1	8.0	12.0	Q2
MSP430G2203IRHB32T	VQFN	RHB	32	250	180.0	12.4	5.3	5.3	1.1	8.0	12.0	Q2
MSP430G2203IRHB32T	VQFN	RHB	32	250	180.0	12.4	5.3	5.3	1.1	8.0	12.0	Q2
MSP430G2233IPW20R	TSSOP	PW	20	2000	330.0	16.4	6.95	7.1	1.6	8.0	16.0	Q1
MSP430G2233IPW20R	TSSOP	PW	20	2000	330.0	16.4	6.95	7.0	1.4	8.0	16.0	Q1
MSP430G2233IPW28R	TSSOP	PW	28	2000	330.0	16.4	6.75	10.1	1.8	12.0	16.0	Q1
MSP430G2233IPW28R	TSSOP	PW	28	2000	330.0	16.4	6.9	10.2	1.8	12.0	16.0	Q1
MSP430G2233IRHB32R	VQFN	RHB	32	3000	330.0	12.4	5.3	5.3	1.1	8.0	12.0	Q2
MSP430G2233IRHB32R	VQFN	RHB	32	3000	330.0	12.4	5.3	5.3	1.1	8.0	12.0	Q2
MSP430G2233IRHB32T	VQFN	RHB	32	250	180.0	12.4	5.3	5.3	1.1	8.0	12.0	Q2

Device	Package Type	Package Drawing	Pins	SPQ	Reel Diameter (mm)	Reel Width W1 (mm)	A0 (mm)	B0 (mm)	K0 (mm)	P1 (mm)	W (mm)	Pin1 Quadrant
MSP430G2233IRHB32T	VQFN	RHB	32	250	180.0	12.4	5.3	5.3	1.1	8.0	12.0	Q2
MSP430G2303IPW20R	TSSOP	PW	20	2000	330.0	16.4	6.95	7.0	1.4	8.0	16.0	Q1
MSP430G2303IPW20R	TSSOP	PW	20	2000	330.0	16.4	6.95	7.1	1.6	8.0	16.0	Q1
MSP430G2303IPW28R	TSSOP	PW	28	2000	330.0	16.4	6.75	10.1	1.8	12.0	16.0	Q1
MSP430G2303IPW28R	TSSOP	PW	28	2000	330.0	16.4	6.9	10.2	1.8	12.0	16.0	Q1
MSP430G2303IRHB32R	VQFN	RHB	32	3000	330.0	12.4	5.3	5.3	1.1	8.0	12.0	Q2
MSP430G2303IRHB32R	VQFN	RHB	32	3000	330.0	12.4	5.3	5.3	1.1	8.0	12.0	Q2
MSP430G2303IRHB32T	VQFN	RHB	32	250	180.0	12.4	5.3	5.3	1.1	8.0	12.0	Q2
MSP430G2303IRHB32T	VQFN	RHB	32	250	180.0	12.4	5.3	5.3	1.1	8.0	12.0	Q2
MSP430G2333IPW20R	TSSOP	PW	20	2000	330.0	16.4	6.95	7.0	1.4	8.0	16.0	Q1
MSP430G2333IPW20R	TSSOP	PW	20	2000	330.0	16.4	6.95	7.1	1.6	8.0	16.0	Q1
MSP430G2333IPW28R	TSSOP	PW	28	2000	330.0	16.4	6.75	10.1	1.8	12.0	16.0	Q1
MSP430G2333IPW28R	TSSOP	PW	28	2000	330.0	16.4	6.9	10.2	1.8	12.0	16.0	Q1
MSP430G2333IRHB32R	VQFN	RHB	32	3000	330.0	12.4	5.3	5.3	1.1	8.0	12.0	Q2
MSP430G2333IRHB32R	VQFN	RHB	32	3000	330.0	12.4	5.3	5.3	1.1	8.0	12.0	Q2
MSP430G2333IRHB32T	VQFN	RHB	32	250	180.0	12.4	5.3	5.3	1.1	8.0	12.0	Q2
MSP430G2333IRHB32T	VQFN	RHB	32	250	180.0	12.4	5.3	5.3	1.1	8.0	12.0	Q2
MSP430G2403IPW20R	TSSOP	PW	20	2000	330.0	16.4	6.95	7.1	1.6	8.0	16.0	Q1
MSP430G2403IPW20R	TSSOP	PW	20	2000	330.0	16.4	6.95	7.0	1.4	8.0	16.0	Q1
MSP430G2403IPW28R	TSSOP	PW	28	2000	330.0	16.4	6.9	10.2	1.8	12.0	16.0	Q1
MSP430G2403IPW28R	TSSOP	PW	28	2000	330.0	16.4	6.75	10.1	1.8	12.0	16.0	Q1
MSP430G2403IRHB32R	VQFN	RHB	32	3000	330.0	12.4	5.3	5.3	1.1	8.0	12.0	Q2
MSP430G2403IRHB32R	VQFN	RHB	32	3000	330.0	12.4	5.3	5.3	1.1	8.0	12.0	Q2
MSP430G2403IRHB32T	VQFN	RHB	32	250	180.0	12.4	5.3	5.3	1.1	8.0	12.0	Q2
MSP430G2403IRHB32T	VQFN	RHB	32	250	180.0	12.4	5.3	5.3	1.1	8.0	12.0	Q2
MSP430G2433IPW20R	TSSOP	PW	20	2000	330.0	16.4	6.95	7.0	1.4	8.0	16.0	Q1
MSP430G2433IPW20R	TSSOP	PW	20	2000	330.0	16.4	6.95	7.1	1.6	8.0	16.0	Q1
MSP430G2433IPW28R	TSSOP	PW	28	2000	330.0	16.4	6.9	10.2	1.8	12.0	16.0	Q1
MSP430G2433IPW28R	TSSOP	PW	28	2000	330.0	16.4	6.75	10.1	1.8	12.0	16.0	Q1
MSP430G2433IRHB32R	VQFN	RHB	32	3000	330.0	12.4	5.3	5.3	1.1	8.0	12.0	Q2
MSP430G2433IRHB32R	VQFN	RHB	32	3000	330.0	12.4	5.3	5.3	1.1	8.0	12.0	Q2
MSP430G2433IRHB32T	VQFN	RHB	32	250	180.0	12.4	5.3	5.3	1.1	8.0	12.0	Q2
MSP430G2433IRHB32T	VQFN	RHB	32	250	180.0	12.4	5.3	5.3	1.1	8.0	12.0	Q2
MSP430G2533IPW20R	TSSOP	PW	20	2000	330.0	16.4	6.95	7.1	1.6	8.0	16.0	Q1
MSP430G2533IPW20R	TSSOP	PW	20	2000	330.0	16.4	6.95	7.0	1.4	8.0	16.0	Q1
MSP430G2533IPW28R	TSSOP	PW	28	2000	330.0	16.4	6.75	10.1	1.8	12.0	16.0	Q1
MSP430G2533IPW28R	TSSOP	PW	28	2000	330.0	16.4	6.9	10.2	1.8	12.0	16.0	Q1
MSP430G2533IRHB32R	VQFN	RHB	32	3000	330.0	12.4	5.3	5.3	1.1	8.0	12.0	Q2
MSP430G2533IRHB32R	VQFN	RHB	32	3000	330.0	12.4	5.3	5.3	1.1	8.0	12.0	Q2
MSP430G2533IRHB32T	VQFN	RHB	32	250	180.0	12.4	5.3	5.3	1.1	8.0	12.0	Q2
MSP430G2533IRHB32T	VQFN	RHB	32	250	180.0	12.4	5.3	5.3	1.1	8.0	12.0	Q2

TAPE AND REEL BOX DIMENSIONS

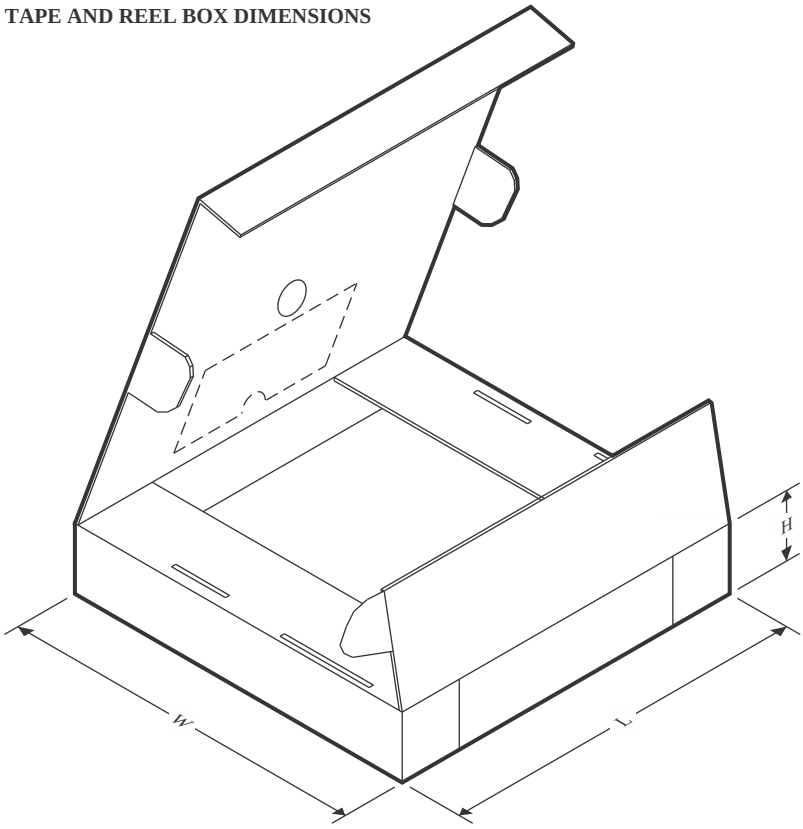

*All dimensions are nominal

Device	Package Type	Package Drawing	Pins	SPQ	Length (mm)	Width (mm)	Height (mm)
M430G2533IPW20RG4	TSSOP	PW	20	2000	353.0	353.0	32.0
MSP430G2203IPW20R	TSSOP	PW	20	2000	350.0	350.0	43.0
MSP430G2203IPW20R	TSSOP	PW	20	2000	353.0	353.0	32.0
MSP430G2203IPW28R	TSSOP	PW	28	2000	350.0	350.0	43.0
MSP430G2203IPW28R	TSSOP	PW	28	2000	353.0	353.0	32.0
MSP430G2203IRHB32R	VQFN	RHB	32	3000	367.0	367.0	35.0
MSP430G2203IRHB32R	VQFN	RHB	32	3000	367.0	367.0	35.0
MSP430G2203IRHB32T	VQFN	RHB	32	250	210.0	185.0	35.0
MSP430G2203IRHB32T	VQFN	RHB	32	250	210.0	185.0	35.0
MSP430G2233IPW20R	TSSOP	PW	20	2000	350.0	350.0	43.0
MSP430G2233IPW20R	TSSOP	PW	20	2000	353.0	353.0	32.0
MSP430G2233IPW28R	TSSOP	PW	28	2000	353.0	353.0	32.0
MSP430G2233IPW28R	TSSOP	PW	28	2000	350.0	350.0	43.0
MSP430G2233IRHB32R	VQFN	RHB	32	3000	367.0	367.0	35.0
MSP430G2233IRHB32R	VQFN	RHB	32	3000	367.0	367.0	35.0
MSP430G2233IRHB32T	VQFN	RHB	32	250	210.0	185.0	35.0
MSP430G2233IRHB32T	VQFN	RHB	32	250	210.0	185.0	35.0
MSP430G2303IPW20R	TSSOP	PW	20	2000	353.0	353.0	32.0

Device	Package Type	Package Drawing	Pins	SPQ	Length (mm)	Width (mm)	Height (mm)
MSP430G2303IPW20R	TSSOP	PW	20	2000	350.0	350.0	43.0
MSP430G2303IPW28R	TSSOP	PW	28	2000	353.0	353.0	32.0
MSP430G2303IPW28R	TSSOP	PW	28	2000	350.0	350.0	43.0
MSP430G2303IRHB32R	VQFN	RHB	32	3000	367.0	367.0	35.0
MSP430G2303IRHB32R	VQFN	RHB	32	3000	367.0	367.0	35.0
MSP430G2303IRHB32T	VQFN	RHB	32	250	210.0	185.0	35.0
MSP430G2303IRHB32T	VQFN	RHB	32	250	210.0	185.0	35.0
MSP430G2333IPW20R	TSSOP	PW	20	2000	353.0	353.0	32.0
MSP430G2333IPW20R	TSSOP	PW	20	2000	350.0	350.0	43.0
MSP430G2333IPW28R	TSSOP	PW	28	2000	353.0	353.0	32.0
MSP430G2333IPW28R	TSSOP	PW	28	2000	350.0	350.0	43.0
MSP430G2333IRHB32R	VQFN	RHB	32	3000	367.0	367.0	35.0
MSP430G2333IRHB32R	VQFN	RHB	32	3000	367.0	367.0	35.0
MSP430G2333IRHB32T	VQFN	RHB	32	250	210.0	185.0	35.0
MSP430G2333IRHB32T	VQFN	RHB	32	250	210.0	185.0	35.0
MSP430G2403IPW20R	TSSOP	PW	20	2000	350.0	350.0	43.0
MSP430G2403IPW20R	TSSOP	PW	20	2000	353.0	353.0	32.0
MSP430G2403IPW28R	TSSOP	PW	28	2000	350.0	350.0	43.0
MSP430G2403IPW28R	TSSOP	PW	28	2000	353.0	353.0	32.0
MSP430G2403IRHB32R	VQFN	RHB	32	3000	367.0	367.0	35.0
MSP430G2403IRHB32R	VQFN	RHB	32	3000	367.0	367.0	35.0
MSP430G2403IRHB32T	VQFN	RHB	32	250	210.0	185.0	35.0
MSP430G2403IRHB32T	VQFN	RHB	32	250	210.0	185.0	35.0
MSP430G2433IPW20R	TSSOP	PW	20	2000	353.0	353.0	32.0
MSP430G2433IPW20R	TSSOP	PW	20	2000	350.0	350.0	43.0
MSP430G2433IPW28R	TSSOP	PW	28	2000	350.0	350.0	43.0
MSP430G2433IPW28R	TSSOP	PW	28	2000	353.0	353.0	32.0
MSP430G2433IRHB32R	VQFN	RHB	32	3000	367.0	367.0	35.0
MSP430G2433IRHB32R	VQFN	RHB	32	3000	367.0	367.0	35.0
MSP430G2433IRHB32T	VQFN	RHB	32	250	210.0	185.0	35.0
MSP430G2433IRHB32T	VQFN	RHB	32	250	210.0	185.0	35.0
MSP430G2533IPW20R	TSSOP	PW	20	2000	350.0	350.0	43.0
MSP430G2533IPW20R	TSSOP	PW	20	2000	353.0	353.0	32.0
MSP430G2533IPW28R	TSSOP	PW	28	2000	353.0	353.0	32.0
MSP430G2533IPW28R	TSSOP	PW	28	2000	350.0	350.0	43.0
MSP430G2533IRHB32R	VQFN	RHB	32	3000	367.0	367.0	35.0
MSP430G2533IRHB32R	VQFN	RHB	32	3000	367.0	367.0	35.0
MSP430G2533IRHB32T	VQFN	RHB	32	250	210.0	185.0	35.0
MSP430G2533IRHB32T	VQFN	RHB	32	250	210.0	185.0	35.0

TUBE

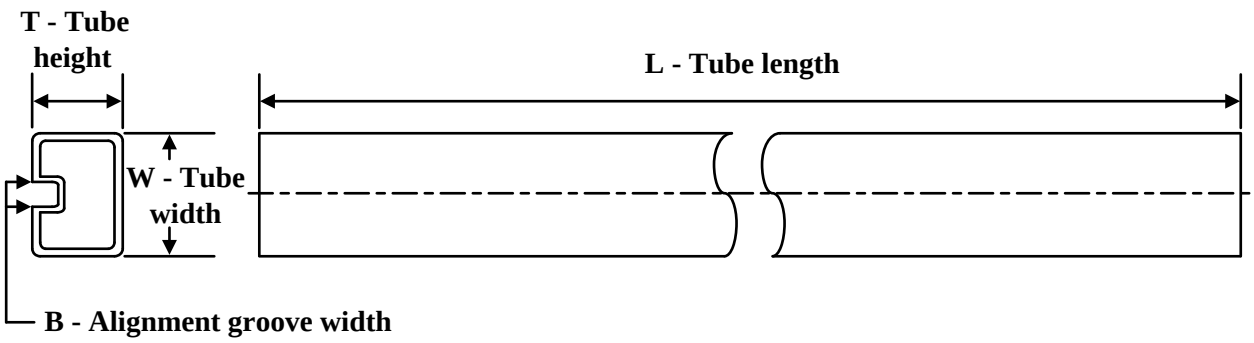

*All dimensions are nominal

Device	Package Name	Package Type	Pins	SPQ	L (mm)	W (mm)	T (µm)	B (mm)
MSP430G2203IN20	N	PDIP	20	20	506	13.97	11230	4.32
MSP430G2203IN20.A	N	PDIP	20	20	506	13.97	11230	4.32
MSP430G2203IN20.B	N	PDIP	20	20	506	13.97	11230	4.32
MSP430G2203IPW20	PW	TSSOP	20	70	530	10.2	3600	3.5
MSP430G2203IPW20	PW	TSSOP	20	70	530	10.2	3600	3.5
MSP430G2203IPW20.A	PW	TSSOP	20	70	530	10.2	3600	3.5
MSP430G2203IPW20.A	PW	TSSOP	20	70	530	10.2	3600	3.5
MSP430G2203IPW20.B	PW	TSSOP	20	70	530	10.2	3600	3.5
MSP430G2203IPW20.B	PW	TSSOP	20	70	530	10.2	3600	3.5
MSP430G2203IPW28	PW	TSSOP	28	50	530	10.2	3600	3.5
MSP430G2203IPW28	PW	TSSOP	28	50	530	10.2	3600	3.5
MSP430G2203IPW28.A	PW	TSSOP	28	50	530	10.2	3600	3.5
MSP430G2203IPW28.A	PW	TSSOP	28	50	530	10.2	3600	3.5
MSP430G2203IPW28.B	PW	TSSOP	28	50	530	10.2	3600	3.5
MSP430G2203IPW28.B	PW	TSSOP	28	50	530	10.2	3600	3.5
MSP430G2233IN20	N	PDIP	20	20	506	13.97	11230	4.32
MSP430G2233IN20.A	N	PDIP	20	20	506	13.97	11230	4.32
MSP430G2233IN20.B	N	PDIP	20	20	506	13.97	11230	4.32
MSP430G2233IPW20	PW	TSSOP	20	70	530	10.2	3600	3.5
MSP430G2233IPW20	PW	TSSOP	20	70	530	10.2	3600	3.5
MSP430G2233IPW20.A	PW	TSSOP	20	70	530	10.2	3600	3.5
MSP430G2233IPW20.A	PW	TSSOP	20	70	530	10.2	3600	3.5
MSP430G2233IPW20.B	PW	TSSOP	20	70	530	10.2	3600	3.5
MSP430G2233IPW20.B	PW	TSSOP	20	70	530	10.2	3600	3.5
MSP430G2233IPW28	PW	TSSOP	28	50	530	10.2	3600	3.5
MSP430G2233IPW28	PW	TSSOP	28	50	530	10.2	3600	3.5
MSP430G2233IPW28.A	PW	TSSOP	28	50	530	10.2	3600	3.5
MSP430G2233IPW28.A	PW	TSSOP	28	50	530	10.2	3600	3.5
MSP430G2233IPW28.B	PW	TSSOP	28	50	530	10.2	3600	3.5

Device	Package Name	Package Type	Pins	SPQ	L (mm)	W (mm)	T (µm)	B (mm)
MSP430G2233IPW28.B	PW	TSSOP	28	50	530	10.2	3600	3.5
MSP430G2303IPW20	PW	TSSOP	20	70	530	10.2	3600	3.5
MSP430G2303IPW20	PW	TSSOP	20	70	530	10.2	3600	3.5
MSP430G2303IPW20.A	PW	TSSOP	20	70	530	10.2	3600	3.5
MSP430G2303IPW20.A	PW	TSSOP	20	70	530	10.2	3600	3.5
MSP430G2303IPW20.B	PW	TSSOP	20	70	530	10.2	3600	3.5
MSP430G2303IPW20.B	PW	TSSOP	20	70	530	10.2	3600	3.5
MSP430G2303IPW28	PW	TSSOP	28	50	530	10.2	3600	3.5
MSP430G2303IPW28	PW	TSSOP	28	50	530	10.2	3600	3.5
MSP430G2303IPW28.A	PW	TSSOP	28	50	530	10.2	3600	3.5
MSP430G2303IPW28.A	PW	TSSOP	28	50	530	10.2	3600	3.5
MSP430G2303IPW28.B	PW	TSSOP	28	50	530	10.2	3600	3.5
MSP430G2303IPW28.B	PW	TSSOP	28	50	530	10.2	3600	3.5
MSP430G2333IN20	N	PDIP	20	20	506	13.97	11230	4.32
MSP430G2333IN20.A	N	PDIP	20	20	506	13.97	11230	4.32
MSP430G2333IN20.B	N	PDIP	20	20	506	13.97	11230	4.32
MSP430G2333IPW20	PW	TSSOP	20	70	530	10.2	3600	3.5
MSP430G2333IPW20	PW	TSSOP	20	70	530	10.2	3600	3.5
MSP430G2333IPW20.A	PW	TSSOP	20	70	530	10.2	3600	3.5
MSP430G2333IPW20.A	PW	TSSOP	20	70	530	10.2	3600	3.5
MSP430G2333IPW20.B	PW	TSSOP	20	70	530	10.2	3600	3.5
MSP430G2333IPW20.B	PW	TSSOP	20	70	530	10.2	3600	3.5
MSP430G2333IPW28	PW	TSSOP	28	50	530	10.2	3600	3.5
MSP430G2333IPW28	PW	TSSOP	28	50	530	10.2	3600	3.5
MSP430G2333IPW28.A	PW	TSSOP	28	50	530	10.2	3600	3.5
MSP430G2333IPW28.A	PW	TSSOP	28	50	530	10.2	3600	3.5
MSP430G2333IPW28.B	PW	TSSOP	28	50	530	10.2	3600	3.5
MSP430G2333IPW28.B	PW	TSSOP	28	50	530	10.2	3600	3.5
MSP430G2403IN20	N	PDIP	20	20	506	13.97	11230	4.32
MSP430G2403IN20.A	N	PDIP	20	20	506	13.97	11230	4.32
MSP430G2403IN20.B	N	PDIP	20	20	506	13.97	11230	4.32
MSP430G2403IPW20	PW	TSSOP	20	70	530	10.2	3600	3.5
MSP430G2403IPW20	PW	TSSOP	20	70	530	10.2	3600	3.5
MSP430G2403IPW20.A	PW	TSSOP	20	70	530	10.2	3600	3.5
MSP430G2403IPW20.A	PW	TSSOP	20	70	530	10.2	3600	3.5
MSP430G2403IPW20.B	PW	TSSOP	20	70	530	10.2	3600	3.5
MSP430G2403IPW20.B	PW	TSSOP	20	70	530	10.2	3600	3.5
MSP430G2403IPW28	PW	TSSOP	28	50	530	10.2	3600	3.5
MSP430G2403IPW28	PW	TSSOP	28	50	530	10.2	3600	3.5
MSP430G2403IPW28.A	PW	TSSOP	28	50	530	10.2	3600	3.5
MSP430G2403IPW28.A	PW	TSSOP	28	50	530	10.2	3600	3.5
MSP430G2403IPW28.B	PW	TSSOP	28	50	530	10.2	3600	3.5
MSP430G2403IPW28.B	PW	TSSOP	28	50	530	10.2	3600	3.5

Device	Package Name	Package Type	Pins	SPQ	L (mm)	W (mm)	T (µm)	B (mm)
MSP430G2433IN20	N	PDIP	20	20	506	13.97	11230	4.32
MSP430G2433IN20.A	N	PDIP	20	20	506	13.97	11230	4.32
MSP430G2433IN20.B	N	PDIP	20	20	506	13.97	11230	4.32
MSP430G2433IPW20	PW	TSSOP	20	70	530	10.2	3600	3.5
MSP430G2433IPW20	PW	TSSOP	20	70	530	10.2	3600	3.5
MSP430G2433IPW20.A	PW	TSSOP	20	70	530	10.2	3600	3.5
MSP430G2433IPW20.A	PW	TSSOP	20	70	530	10.2	3600	3.5
MSP430G2433IPW20.B	PW	TSSOP	20	70	530	10.2	3600	3.5
MSP430G2433IPW20.B	PW	TSSOP	20	70	530	10.2	3600	3.5
MSP430G2433IPW28	PW	TSSOP	28	50	530	10.2	3600	3.5
MSP430G2433IPW28	PW	TSSOP	28	50	530	10.2	3600	3.5
MSP430G2433IPW28.A	PW	TSSOP	28	50	530	10.2	3600	3.5
MSP430G2433IPW28.A	PW	TSSOP	28	50	530	10.2	3600	3.5
MSP430G2433IPW28.B	PW	TSSOP	28	50	530	10.2	3600	3.5
MSP430G2433IPW28.B	PW	TSSOP	28	50	530	10.2	3600	3.5
MSP430G2533IN20	N	PDIP	20	20	506	13.97	11230	4.32
MSP430G2533IN20.A	N	PDIP	20	20	506	13.97	11230	4.32
MSP430G2533IN20.B	N	PDIP	20	20	506	13.97	11230	4.32
MSP430G2533IPW20	PW	TSSOP	20	70	530	10.2	3600	3.5
MSP430G2533IPW20	PW	TSSOP	20	70	530	10.2	3600	3.5
MSP430G2533IPW20.A	PW	TSSOP	20	70	530	10.2	3600	3.5
MSP430G2533IPW20.A	PW	TSSOP	20	70	530	10.2	3600	3.5
MSP430G2533IPW20.B	PW	TSSOP	20	70	530	10.2	3600	3.5
MSP430G2533IPW20.B	PW	TSSOP	20	70	530	10.2	3600	3.5
MSP430G2533IPW28	PW	TSSOP	28	50	530	10.2	3600	3.5
MSP430G2533IPW28	PW	TSSOP	28	50	530	10.2	3600	3.5
MSP430G2533IPW28.A	PW	TSSOP	28	50	530	10.2	3600	3.5
MSP430G2533IPW28.A	PW	TSSOP	28	50	530	10.2	3600	3.5
MSP430G2533IPW28.B	PW	TSSOP	28	50	530	10.2	3600	3.5
MSP430G2533IPW28.B	PW	TSSOP	28	50	530	10.2	3600	3.5

N (R–PDIP–T**) PLASTIC DUAL–IN–LINE PACKAGE

16 PINS SHOWN

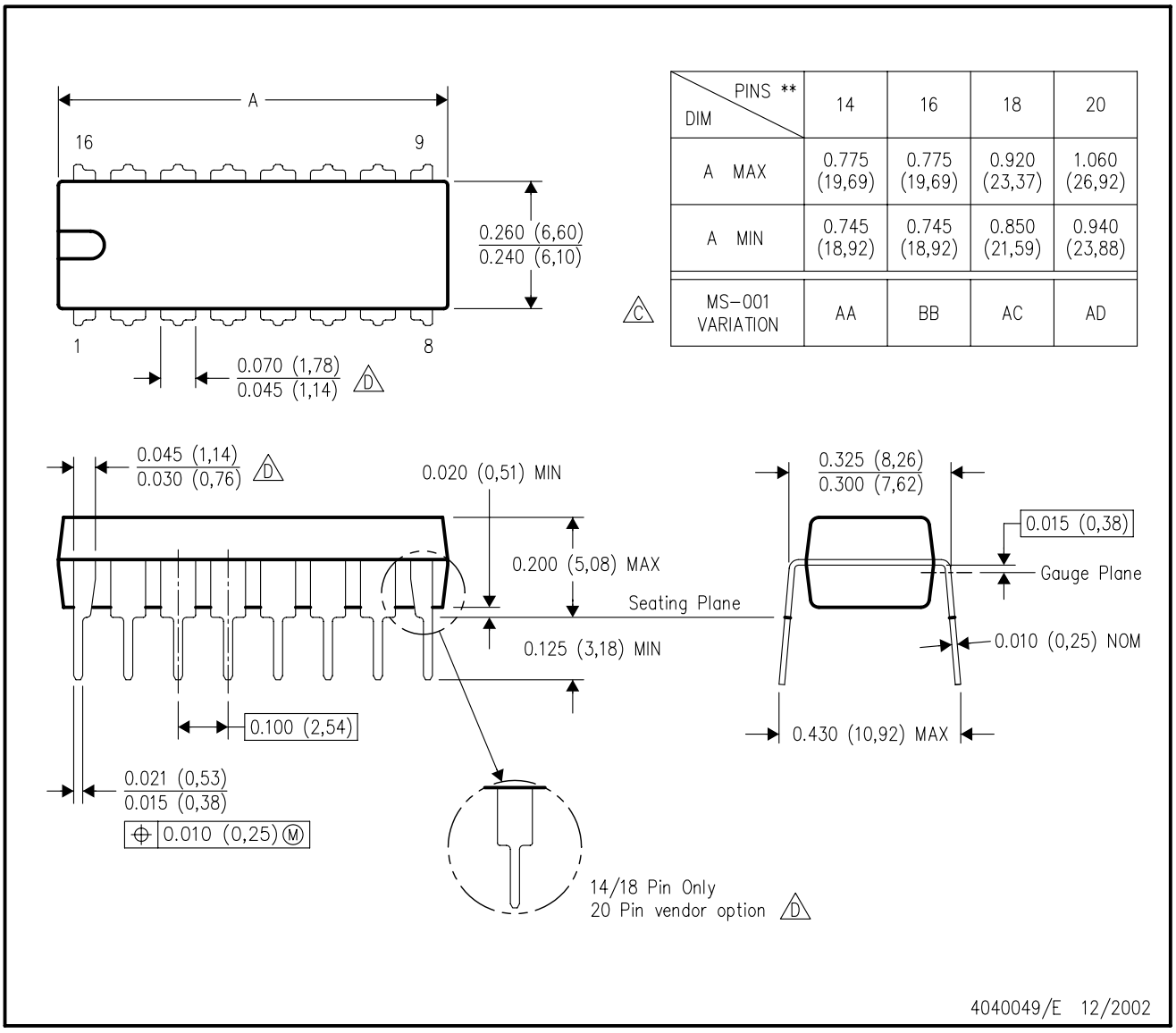

DIM \ PINS **	14	16	18	20
A MAX	0.775 (19,69)	0.775 (19,69)	0.920 (23,37)	1.060 (26,92)
A MIN	0.745 (18,92)	0.745 (18,92)	0.850 (21,59)	0.940 (23,88)
MS–001 VARIATION (C)	AA	BB	AC	AD

NOTES:
A. All linear dimensions are in inches (millimeters).
B. This drawing is subject to change without notice.
C. Falls within JEDEC MS–001, except 18 and 20 pin minimum body length (Dim A).
D. The 20 pin end lead shoulder width is a vendor option, either half or full width.

PW (R-PDSO-G28) PLASTIC SMALL OUTLINE

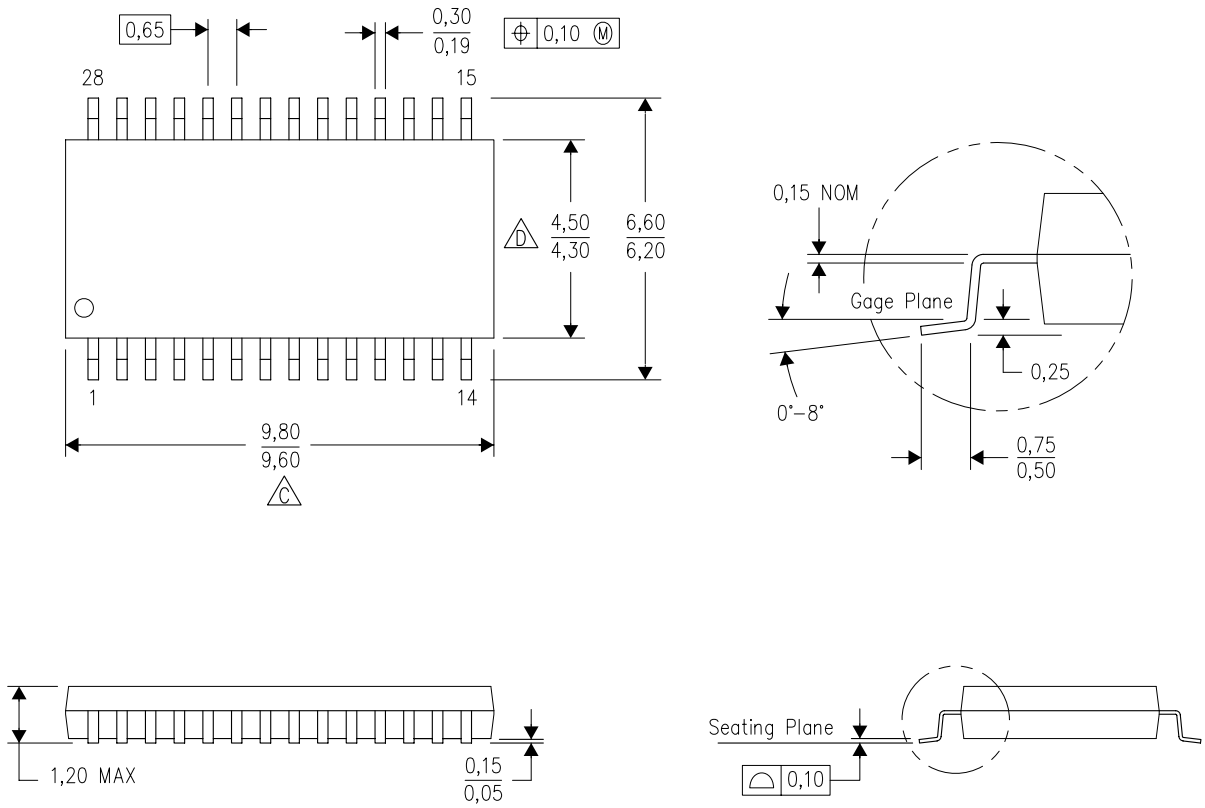

NOTES:
A. All linear dimensions are in millimeters. Dimensioning and tolerancing per ASME Y14.5M–1994.
B. This drawing is subject to change without notice.
C. Body length does not include mold flash, protrusions, or gate burrs. Mold flash, protrusions, or gate burrs shall not exceed 0,15 each side.
D. Body width does not include interlead flash. Interlead flash shall not exceed 0,25 each side.
E. Falls within JEDEC MO-153

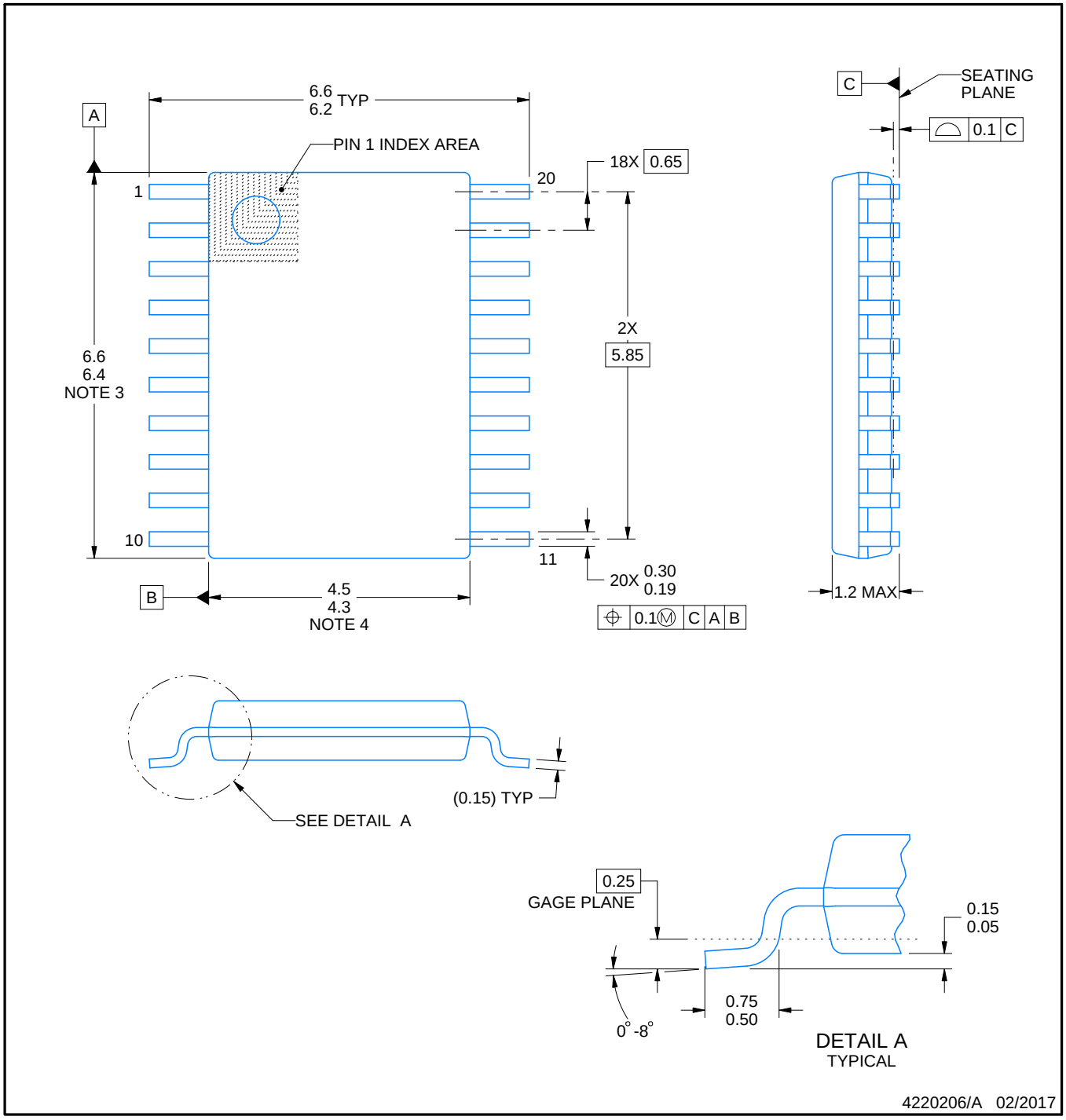

NOTES:

1. All linear dimensions are in millimeters. Any dimensions in parenthesis are for reference only. Dimensioning and tolerancing per ASME Y14.5M.
2. This drawing is subject to change without notice.
3. This dimension does not include mold flash, protrusions, or gate burrs. Mold flash, protrusions, or gate burrs shall not exceed 0.15 mm per side.
4. This dimension does not include interlead flash. Interlead flash shall not exceed 0.25 mm per side.
5. Reference JEDEC registration MO-153.

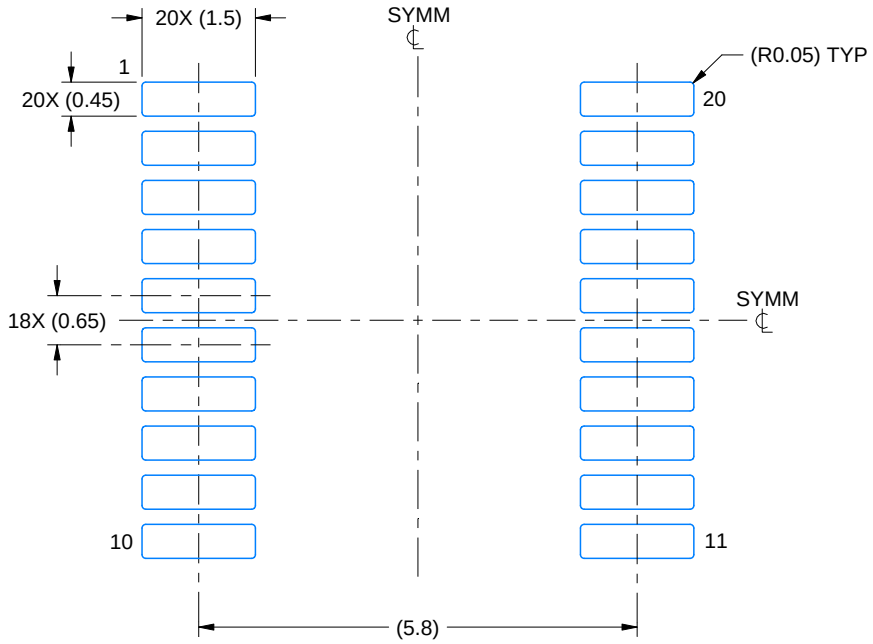

LAND PATTERN EXAMPLE
EXPOSED METAL SHOWN
SCALE: 10X

NON-SOLDER MASK DEFINED (PREFERRED)

SOLDER MASK DEFINED

SOLDER MASK DETAILS

4220206/A 02/2017

NOTES: (continued)

6. Publication IPC-7351 may have alternate designs.
7. Solder mask tolerances between and around signal pads can vary based on board fabrication site.

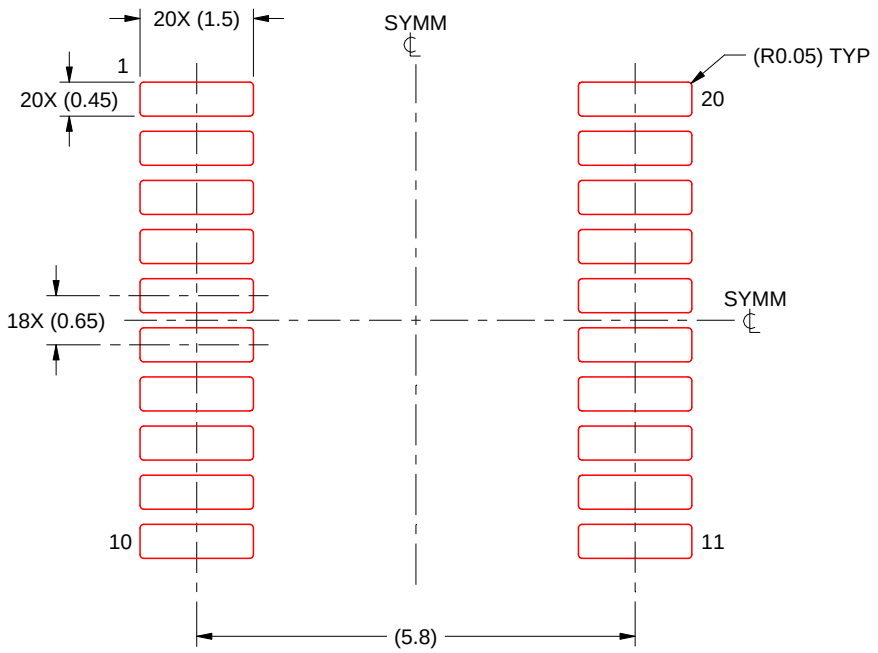

SOLDER PASTE EXAMPLE
BASED ON 0.125 mm THICK STENCIL
SCALE: 10X

4220206/A 02/2017

NOTES: (continued)

8. Laser cutting apertures with trapezoidal walls and rounded corners may offer better paste release. IPC-7525 may have alternate design recommendations.
9. Board assembly site may have different recommendations for stencil design.

GENERIC PACKAGE VIEW

RHB 32

VQFN - 1 mm max height

5 x 5, 0.5 mm pitch

PLASTIC QUAD FLATPACK - NO LEAD

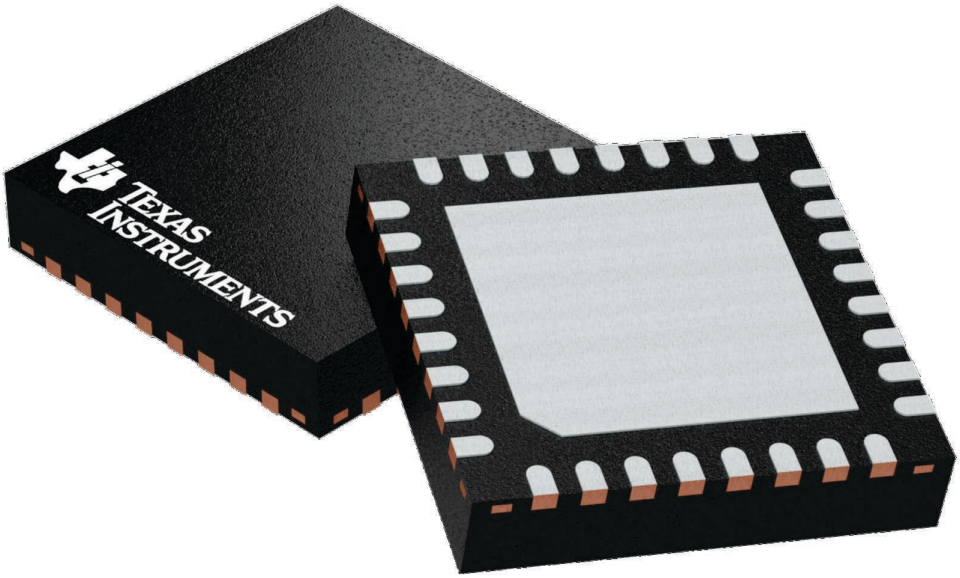

Images above are just a representation of the package family, actual package may vary.
Refer to the product data sheet for package details.

4224745/A

RHB0032E

PACKAGE OUTLINE

VQFN - 1 mm max height

PLASTIC QUAD FLATPACK - NO LEAD

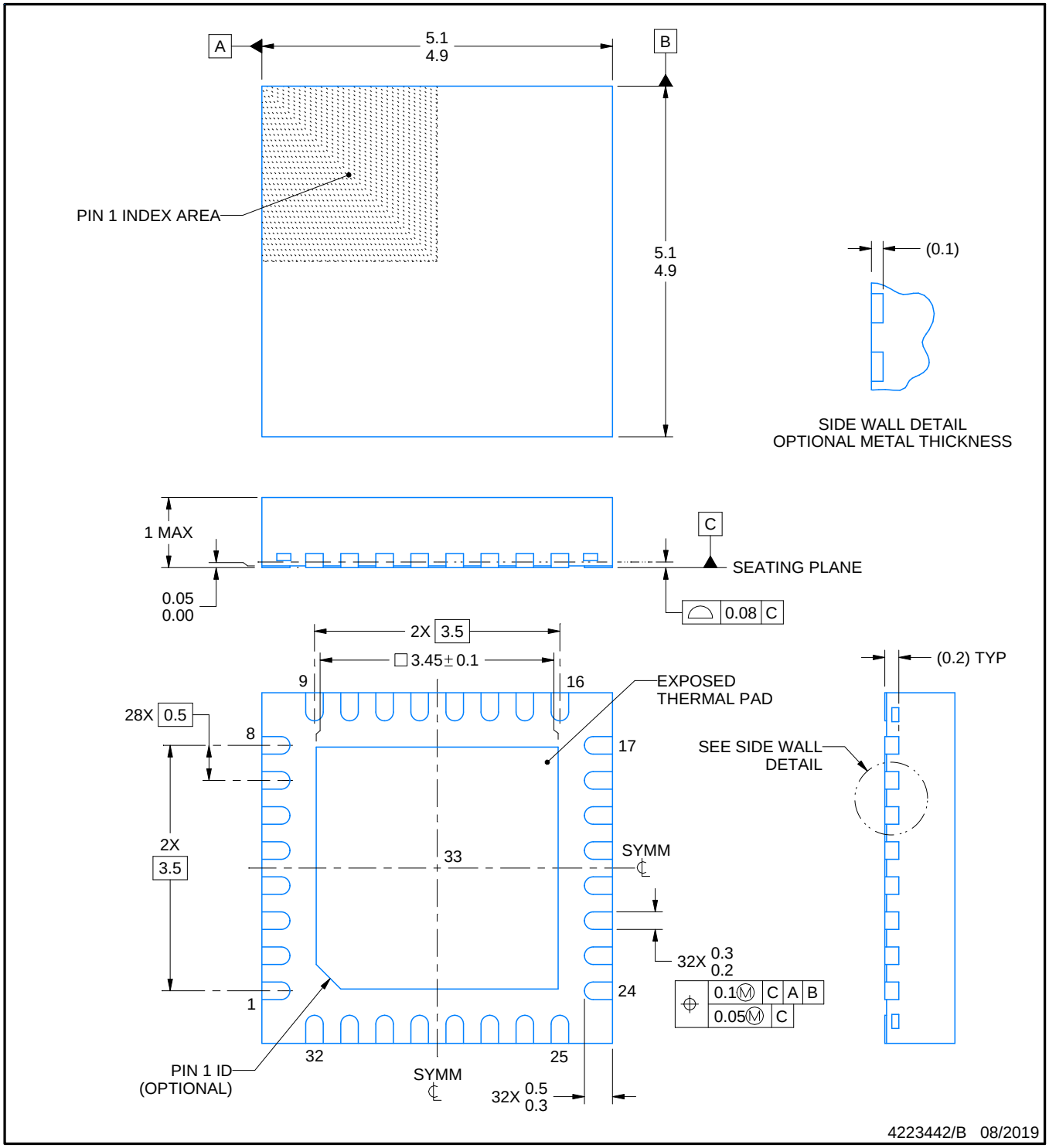

NOTES:

1. All linear dimensions are in millimeters. Any dimensions in parenthesis are for reference only. Dimensioning and tolerancing per ASME Y14.5M.
2. This drawing is subject to change without notice.
3. The package thermal pad must be soldered to the printed circuit board for thermal and mechanical performance.

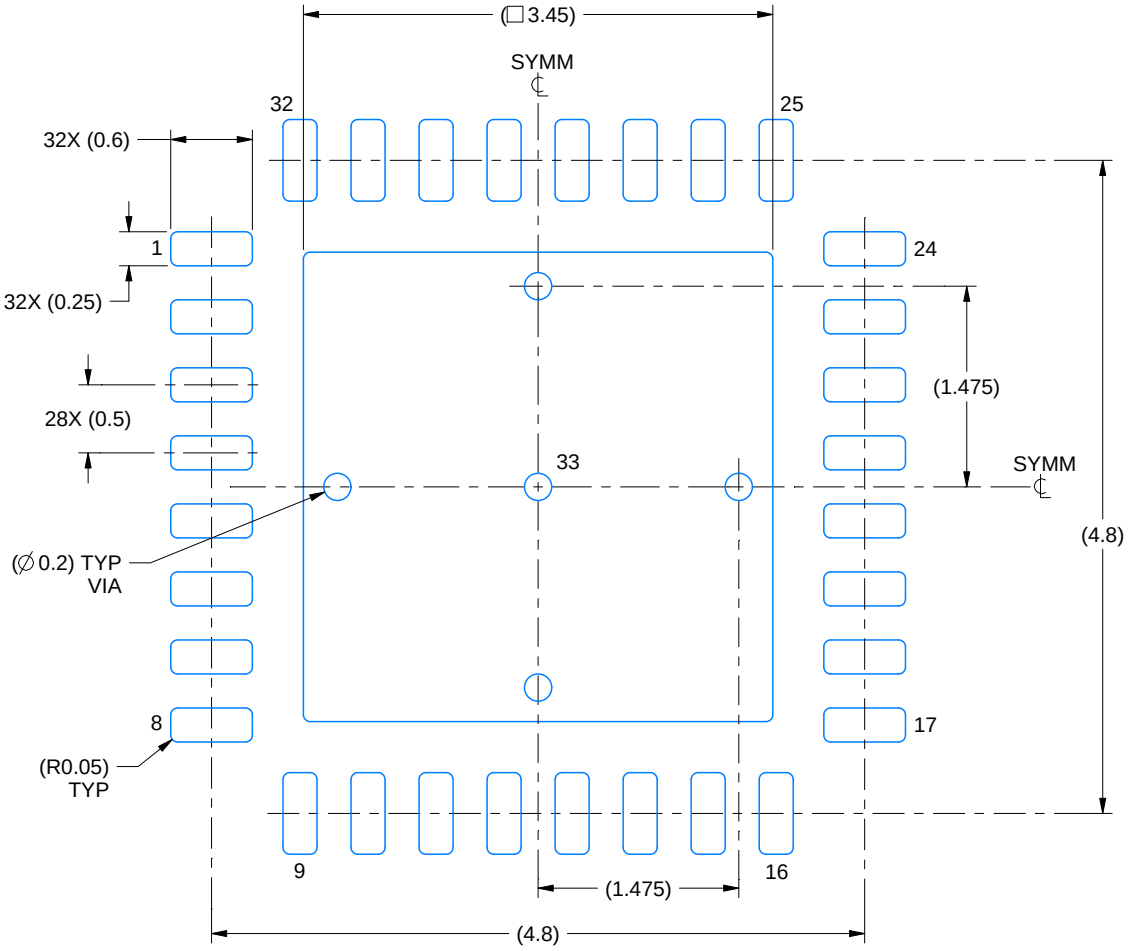

LAND PATTERN EXAMPLE
SCALE:18X

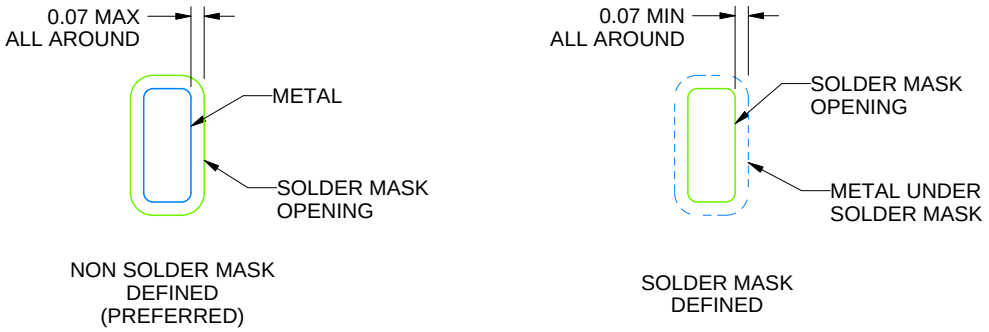

SOLDER MASK DETAILS

4223442/B 08/2019

NOTES: (continued)

4. This package is designed to be soldered to a thermal pad on the board. For more information, see Texas Instruments literature number SLUA271 (www.ti.com/lit/slua271).
5. Vias are optional depending on application, refer to device data sheet. If any vias are implemented, refer to their locations shown on this view. It is recommended that vias under paste be filled, plugged or tented.

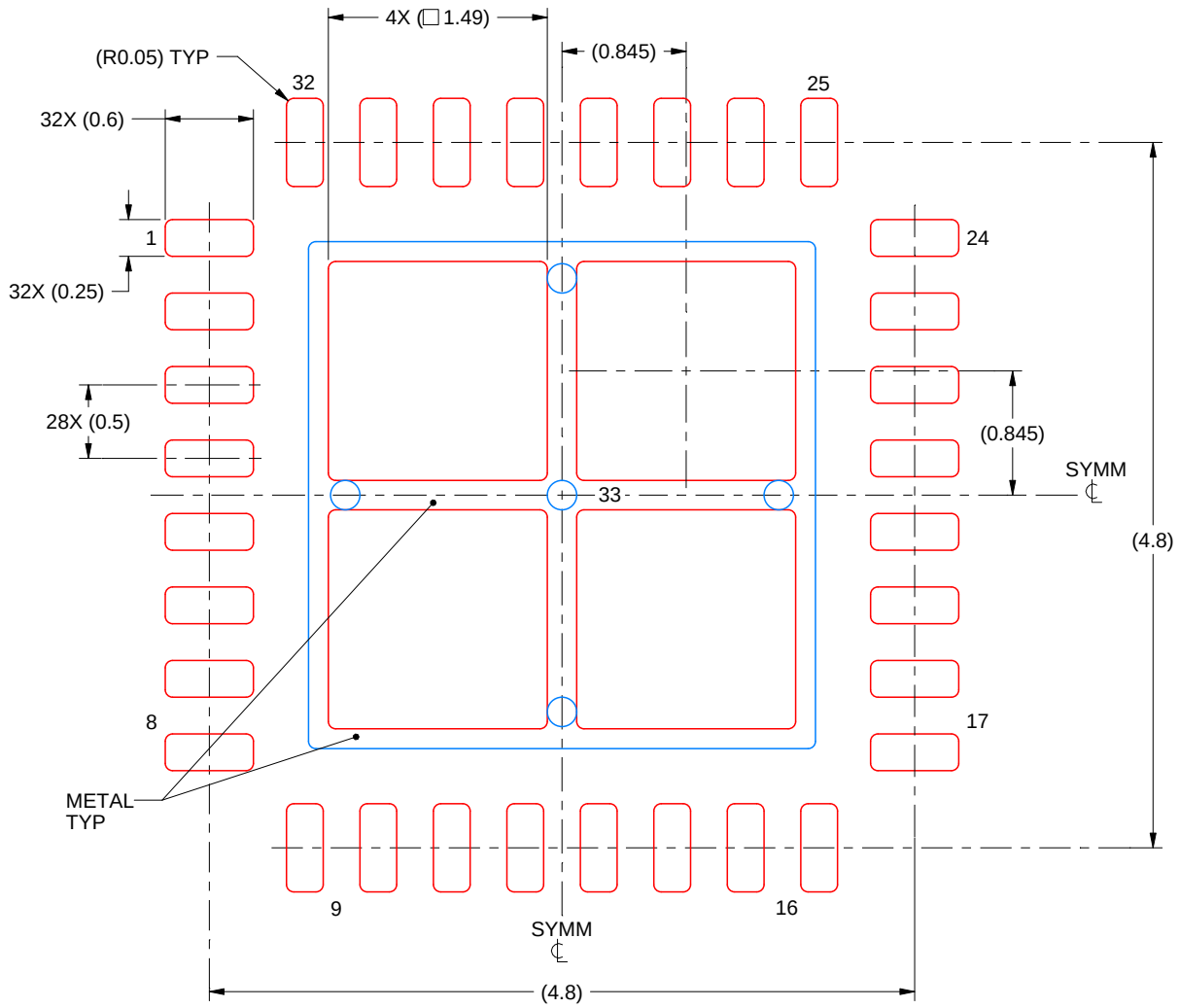

SOLDER PASTE EXAMPLE
BASED ON 0.125 mm THICK STENCIL

EXPOSED PAD 33:
75% PRINTED SOLDER COVERAGE BY AREA UNDER PACKAGE
SCALE:20X

4223442/B 08/2019

NOTES: (continued)

6. Laser cutting apertures with trapezoidal walls and rounded corners may offer better paste release. IPC-7525 may have alternate design recommendations.

IMPORTANT NOTICE AND DISCLAIMER

TI PROVIDES TECHNICAL AND RELIABILITY DATA (INCLUDING DATASHEETS), DESIGN RESOURCES (INCLUDING REFERENCE DESIGNS), APPLICATION OR OTHER DESIGN ADVICE, WEB TOOLS, SAFETY INFORMATION, AND OTHER RESOURCES “AS IS” AND WITH ALL FAULTS, AND DISCLAIMS ALL WARRANTIES, EXPRESS AND IMPLIED, INCLUDING WITHOUT LIMITATION ANY IMPLIED WARRANTIES OF MERCHANTABILITY, FITNESS FOR A PARTICULAR PURPOSE OR NON-INFRINGEMENT OF THIRD PARTY INTELLECTUAL PROPERTY RIGHTS.

These resources are intended for skilled developers designing with TI products. You are solely responsible for (1) selecting the appropriate TI products for your application, (2) designing, validating and testing your application, and (3) ensuring your application meets applicable standards, and any other safety, security, regulatory or other requirements.

These resources are subject to change without notice. TI grants you permission to use these resources only for development of an application that uses the TI products described in the resource. Other reproduction and display of these resources is prohibited. No license is granted to any other TI intellectual property right or to any third party intellectual property right. TI disclaims responsibility for, and you fully indemnify TI and its representatives against any claims, damages, costs, losses, and liabilities arising out of your use of these resources.

TI’s products are provided subject to TI’s Terms of Sale, TI’s General Quality Guidelines, or other applicable terms available either on ti.com or provided in conjunction with such TI products. TI’s provision of these resources does not expand or otherwise alter TI’s applicable warranties or warranty disclaimers for TI products. Unless TI explicitly designates a product as custom or customer-specified, TI products are standard, catalog, general purpose devices.

TI objects to and rejects any additional or different terms you may propose.

Copyright © 2026, Texas Instruments Incorporated

Last updated 10/2025