NCP3712ASN, SZNCP3712ASN

Over Voltage Protected High Side Switch

This switch is primarily intended to protect loads from transients by isolating the load from the transient energy rather than absorbing it.

Features

- Capable of Switching Loads of up to 200 mA without External Rboost
- Switch Shuts Off in Response to an Over Voltage Input Transient
- Features Active Turn Off for Fast Input Transient Protection
- Flexible Over Voltage Protection Threshold Set with External Zener
- Automatic Recovery after Transient Decays Below Threshold
- Withstands Input Transients up to 105 V Peak
- Guaranteed Off State with $\overline{\text{Enbl}}$ Input
- ESD Resistant in Accordance with the 2000 V Human Body Model
- Extremely Low Saturation Voltage
- SZ Prefix for Automotive and Other Applications Requiring Unique Site and Control Change Requirements; AEC−Q101 Qualified and PPAP Capable
- These are Pb−Free Devices

Applications Include:

- High Voltage Transient Isolation
- Power Switching to Electronic Modules
- DC Power Distribution in Line Operated Equipment
- Buffering Sensitive Circuits from Poorly Regulated Power Supplies
- Pre−conditioning of Voltage Regulator Input Voltage

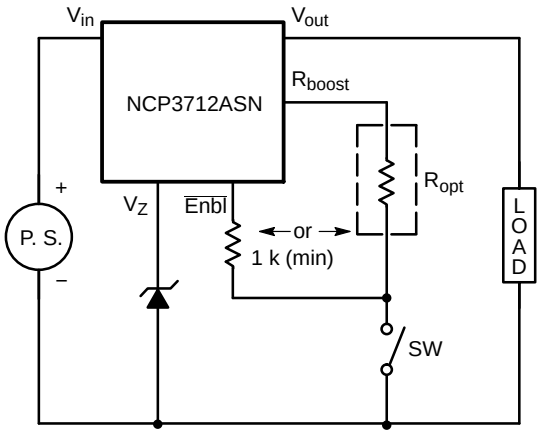

Figure 1. Typical Application Circuit

ON Semiconductor®

http://onsemi.com

MARKING DIAGRAM

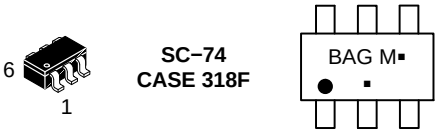

SC−74
CASE 318F

BAG = Device Code
M = Date Code
▪ = Pb−Free Package
(Note: Microdot may be in either location)

INTERNAL CIRCUIT DIAGRAM/ PIN CONFIGURATION

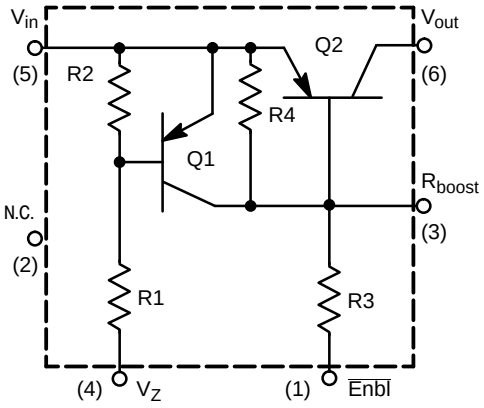

ORDERING INFORMATION

Device	Package	Shipping†
NCP3712ASNT1G SZNCP3712ASNT1G	SC−74 (Pb−Free)	3000 / Tape & Reel
NCP3712ASNT3G SZNCP3712ASNT3G	SC−74 (Pb−Free)	10,000 / Tape & Reel

†For information on tape and reel specifications, including part orientation and tape sizes, please refer to our Tape and Reel Packaging Specifications Brochure, BRD8011/D.

© Semiconductor Components Industries, LLC, 2014

MAXIMUM RATINGS (T_J = 25°C unless otherwise noted) (Note 1)

Rating	Symbol	Value	Unit
Input−to−Output Voltage	V_{io}	105	V
Reverse Input−to−Vz. Voltage	$V_{in(rev)}$	−9.0	V
Reverse Input−to−Rboost Voltage	$V_{in(rev)}$	−5.0	V
Output Load Current − Continuous	I_{load}	−300	mA
Enbl Input Current − Continuous	I_{enbl}	5.0	mA
Vz Input Current − Continuous	I_z	3.0	mA
Rboost Input Current − Continuous	I_{boost}	10	mA
Junction Temperature	T_J	125	°C
Operating Ambient Temperature Range	T_A	−40 to +85	°C
Storage Temperature Range	T_{stg}	−65 to +150	°C
Device Power Dissipation (Minimum Footprint)	P_D	300	mW
Derate Above 25°C	−	2.4	mW/°C
Latchup Performance: Positive Negative	$I_{Latchup}$	200 200	mA

Stresses exceeding Maximum Ratings may damage the device. Maximum Ratings are stress ratings only. Functional operation above the Recommended Operating Conditions is not implied. Extended exposure to stresses above the Recommended Operating Conditions may affect device reliability.

1. This device contains ESD protection and exceeds the following tests:
   Human Body Model 1500 V per MIL−STD−883, Method 3015.
   Machine Model Method 150 V.

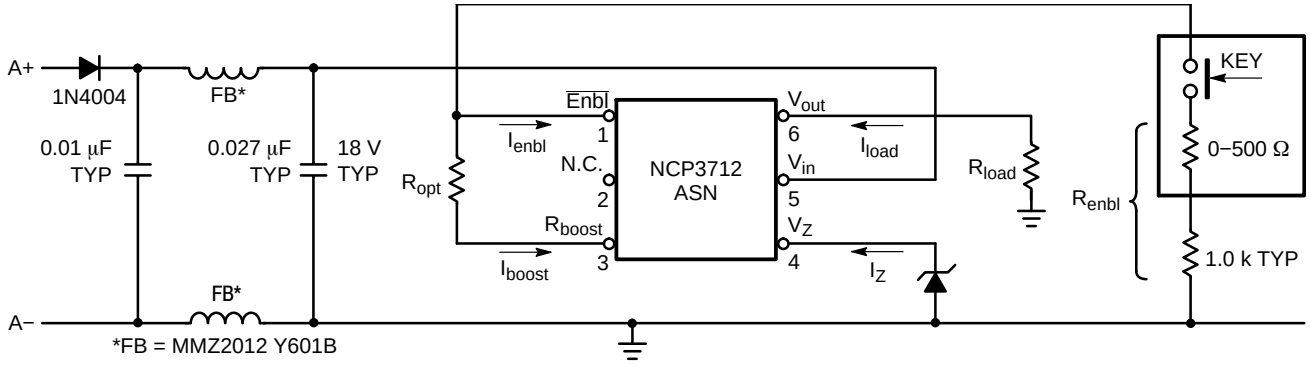

Figure 2. Typical Applications Circuit for Load Dump Transient Protection

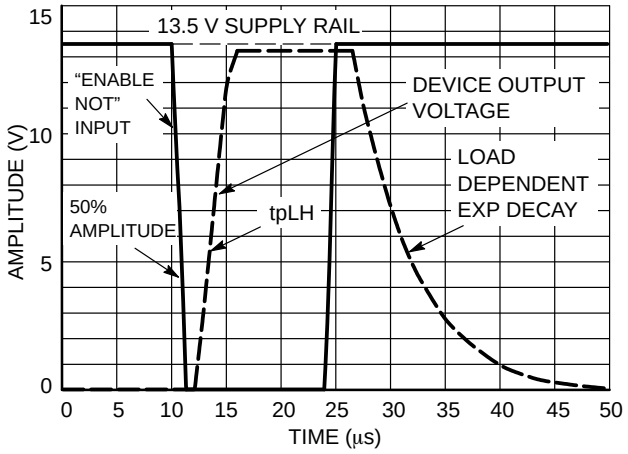

Figure 3. Enable NOT Switching Waveforms

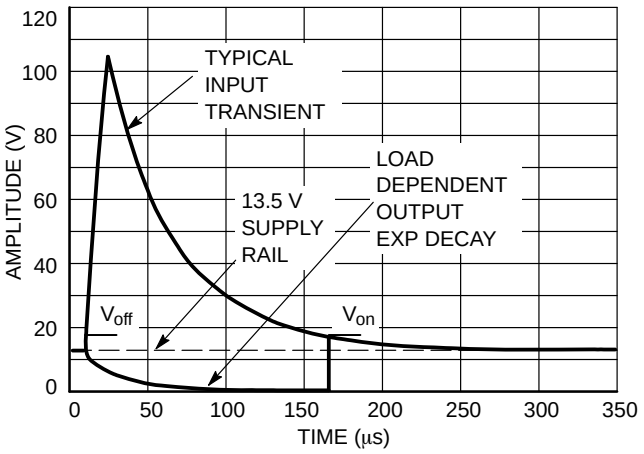

Figure 4. Load Dump Waveforms

ELECTRICAL CHARACTERISTICS (V_{in} = 12.5 V_{DC} Ref to Gnd, T_A = 25°C unless otherwise noted.)

Characteristic	Symbol	Min	Typ	Max	Unit
OFF CHARACTERISTICS					
Input−Output Breakdown Voltage (@ I_{out} = 200 μA)	$V_{(BRio)}$	105	–	–	Vdc
Output Reverse Breakdown Voltage (@ I_{out} = −1.0 mA Pulse)	$V_{(-BRout)}$	–	−0.7	–	Vdc
Output Leakage Current (V_{in} = V_{enbl} = 30 V, T_A = 25°C)	$I_{load(off)}$	–	–	−100	μAdc
Guaranteed “Off” State “ENBL NOT” Voltage ($I_O \le$ 100 μA)	$V_{enbl(off)}$	13	–	–	Vdc
Required “Off” State I_z Current (R_{load} = 100 Ω)	$I_{z(off)}$	150	–	–	μAdc
$V_{in(off)}$ (V_z = 16 V, I_{load} = 100 mA, R_{enbl} = 1500 Ω)	V_{off}	15.5	–	18.7	Vdc
ON CHARACTERISTICS					
Input−Output On Voltage (I_o = 100 mA, I_{enbl} = −3.0 mA)	$V_{io(on)}$	–	0.2	0.5	Vdc
Output Load Current — Continuous (I_{enbl} = −3.0 mA, $V_{io(on)}$ = 0.5 Vdc) (I_{boost} = −9.0 mA, $V_{io(on)}$ = 0.5 Vdc) (I_{boost} = −9.0 mA, $V_{io(on)}$ = 0.6 Vdc)	$I_{o(on)}$	– – –	– – –	−200 −200 −300	mAdc
$V_{in(on)}$ (V_z = 16 V, I_{load} = 100 mA, R_{enbl} = 1500 Ω)	V_{on}	8.5	–	10.5	Vdc
“ENBL NOT” Input Current (I_o = 100 mA, $V_{io(on)}$ = 0.35 Vdc, R_{enbl} = 1500 Ω)	I_{enbl}	–	–	−1.0	mAdc
SWITCHING CHARACTERISTICS					
Propagation Delay Time: Hi to Lo Prop Delay; Fig. 3 (V_{in} = V_{enbl} = 13.5 V) Lo to Hi Prop Delay; Fig. 3 (V_{in} = 13.5 V, V_{enbl} = 0 V)	 t_{PHL} t_{PLH}	 – –	 1.5 1.5	 – –	μS
Transition Times: Fall Time; Fig. 4 (V_{in} = V_{enbl} = 13.5 V) Rise Time; Fig. 4 (V_{in} = V_{enbl} = 0 V)	 t_f t_r	 – –	 75 400	 – –	ηS
INTERNAL RESISTORS					
Input Leakage Resistor	R2	7.0	10	13	kΩ
Input Resistor	R1	3.3	4.7	6.1	kΩ
Output Leakage Resistor	R4	1.4	2.4	3.2	kΩ
Enable Input Resistor	R3	1.4	2.4	3.2	kΩ

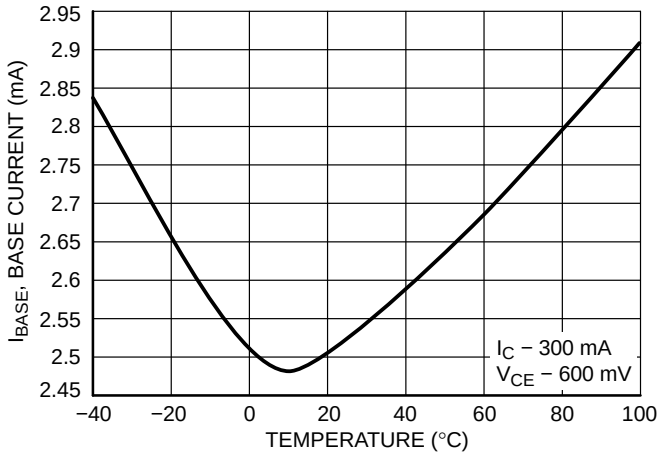

Figure 5. Q2 Base Current vs Temperature with Pin 4 Open

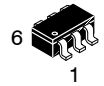

SCALE 2:1

SC−74
CASE 318F
ISSUE P

DATE 07 OCT 2021

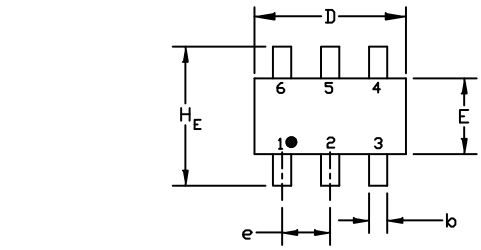

TOP VIEW

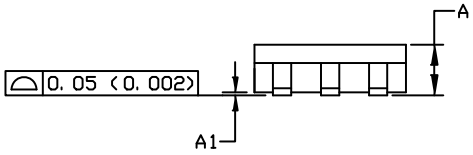

SIDE VIEW

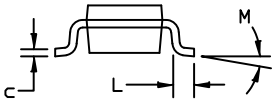

END VIEW

NOTES:
1. DIMENSIONING AND TOLERANCING PER ASME Y14.5M, 1994
2. CONTROLLING DIMENSION: INCHES
3. MAXIMUM LEAD THICKNESS INCLUDES LEAD FINISH THICKNESS. MINIMUM LEAD THICKNESS IS THE MINIMUM THICKNESS OF THE BASE MATERIAL.

	MILLIMETERS			INCHES		
DIM	MIN.	NOM.	MAX.	MIN.	NOM.	MAX.
A	0.90	1.00	1.10	0.035	0.039	0.043
A1	0.01	0.06	0.10	0.001	0.002	0.004
b	0.25	0.37	0.50	0.010	0.015	0.020
c	0.10	0.18	0.26	0.004	0.007	0.010
D	2.90	3.00	3.10	0.114	0.118	0.122
E	1.30	1.50	1.70	0.051	0.059	0.067
e	0.85	0.95	1.05	0.034	0.037	0.041
H_E	2.50	2.75	3.00	0.099	0.108	0.118
L	0.20	0.40	0.60	0.008	0.016	0.024
M	0°	---	10°	0°	---	10°

GENERIC MARKING DIAGRAM*

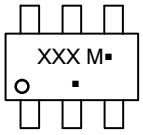

XXX = Specific Device Code
M = Date Code
▪ = Pb−Free Package

(Note: Microdot may be in either location)

*This information is generic. Please refer to device data sheet for actual part marking. Pb−Free indicator, “G” or microdot “▪”, may or may not be present. Some products may not follow the Generic Marking.

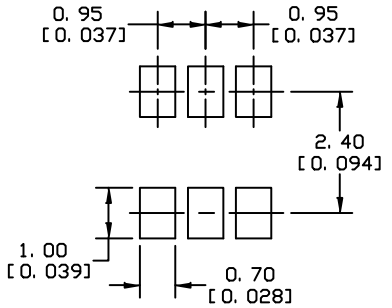

* For additional information on our Pb-Free strategy and soldering details, please download the ON Semiconductor Soldering and Mounting Techniques Reference Manual, SOLDERRM/D.

SOLDERING FOOTPRINT

STYLE 1:
PIN 1. CATHODE
2. ANODE
3. CATHODE
4. CATHODE
5. ANODE
6. CATHODE

STYLE 2:
PIN 1. NO CONNECTION
2. COLLECTOR
3. EMITTER
4. NO CONNECTION
5. COLLECTOR
6. BASE

STYLE 3:
PIN 1. EMITTER 1
2. BASE 1
3. COLLECTOR 2
4. EMITTER 2
5. BASE 2
6. COLLECTOR 1

STYLE 4:
PIN 1. COLLECTOR 2
2. EMITTER 1/EMITTER 2
3. COLLECTOR 1
4. EMITTER 3
5. BASE 1/BASE 2/COLLECTOR 3
6. BASE 3

STYLE 5:
PIN 1. CHANNEL 1
2. ANODE
3. CHANNEL 2
4. CHANNEL 3
5. CATHODE
6. CHANNEL 4

STYLE 6:
PIN 1. CATHODE
2. ANODE
3. CATHODE
4. CATHODE
5. CATHODE
6. CATHODE

STYLE 7:
PIN 1. SOURCE 1
2. GATE 1
3. DRAIN 2
4. SOURCE 2
5. GATE 2
6. DRAIN 1

STYLE 8:
PIN 1. EMITTER 1
2. BASE 2
3. COLLECTOR 2
4. EMITTER 2
5. BASE 1
6. COLLECTOR 1

STYLE 9:
PIN 1. EMITTER 2
2. BASE 2
3. COLLECTOR 1
4. EMITTER 1
5. BASE 1
6. COLLECTOR 2

STYLE 10:
PIN 1. ANODE/CATHODE
2. BASE
3. EMITTER
4. COLLECTOR
5. ANODE
6. CATHODE

STYLE 11:
PIN 1. EMITTER
2. BASE
3. ANODE/CATHODE
4. ANODE
5. CATHODE
6. COLLECTOR

DOCUMENT NUMBER:	**98ASB42973B**	Electronic versions are uncontrolled except when accessed directly from the Document Repository. Printed versions are uncontrolled except when stamped “CONTROLLED COPY” in red.
DESCRIPTION:	**SC−74**	**PAGE 1 OF 1**

onsemi and ONSEMI are trademarks of Semiconductor Components Industries, LLC dba **onsemi** or its subsidiaries in the United States and/or other countries. **onsemi** reserves the right to make changes without further notice to any products herein. **onsemi** makes no warranty, representation or guarantee regarding the suitability of its products for any particular purpose, nor does **onsemi** assume any liability arising out of the application or use of any product or circuit, and specifically disclaims any and all liability, including without limitation special, consequential or incidental damages. **onsemi** does not convey any license under its patent rights nor the rights of others.

onsemi, ONSEMI , and other names, marks, and brands are registered and/or common law trademarks of Semiconductor Components Industries, LLC dba "**onsemi**" or its affiliates and/or subsidiaries in the United States and/or other countries. **onsemi** owns the rights to a number of patents, trademarks, copyrights, trade secrets, and other intellectual property. A listing of **onsemi**'s product/patent coverage may be accessed at www.onsemi.com/site/pdf/Patent−Marking.pdf. **onsemi** reserves the right to make changes at any time to any products or information herein, without notice. The information herein is provided "as−is" and **onsemi** makes no warranty, representation or guarantee regarding the accuracy of the information, product features, availability, functionality, or suitability of its products for any particular purpose, nor does **onsemi** assume any liability arising out of the application or use of any product or circuit, and specifically disclaims any and all liability, including without limitation special, consequential or incidental damages. Buyer is responsible for its products and applications using **onsemi** products, including compliance with all laws, regulations and safety requirements or standards, regardless of any support or applications information provided by **onsemi**. "Typical" parameters which may be provided in **onsemi** data sheets and/or specifications can and do vary in different applications and actual performance may vary over time. All operating parameters, including "Typicals" must be validated for each customer application by customer's technical experts. **onsemi** does not convey any license under any of its intellectual property rights nor the rights of others. **onsemi** products are not designed, intended, or authorized for use as a critical component in life support systems or any FDA Class 3 medical devices or medical devices with a same or similar classification in a foreign jurisdiction or any devices intended for implantation in the human body. Should Buyer purchase or use **onsemi** products for any such unintended or unauthorized application, Buyer shall indemnify and hold **onsemi** and its officers, employees, subsidiaries, affiliates, and distributors harmless against all claims, costs, damages, and expenses, and reasonable attorney fees arising out of, directly or indirectly, any claim of personal injury or death associated with such unintended or unauthorized use, even if such claim alleges that **onsemi** was negligent regarding the design or manufacture of the part. **onsemi** is an Equal Opportunity/Affirmative Action Employer. This literature is subject to all applicable copyright laws and is not for resale in any manner.

ADDITIONAL INFORMATION

TECHNICAL PUBLICATIONS:
Technical Library: www.onsemi.com/design/resources/technical−documentation
onsemi Website: www.onsemi.com

ONLINE SUPPORT: www.onsemi.com/support
For additional information, please contact your local Sales Representative at www.onsemi.com/support/sales