Nx556, Sx556 Dual Precision Timers

1 Features

- Two precision timing circuits per package
- Astable or monostable operation
- TTL-compatible output can sink or source up to 200mA
- Active pullup or pulldown

2 Applications

- Precision timers from microseconds to hours
- Pulse-shaping circuits
- Missing-pulse detectors
- Pulse-width modulators
- Pulse-position modulators
- Sequential timers
- Pulse generators
- Frequency dividers
- Application timers
- Industrial controls

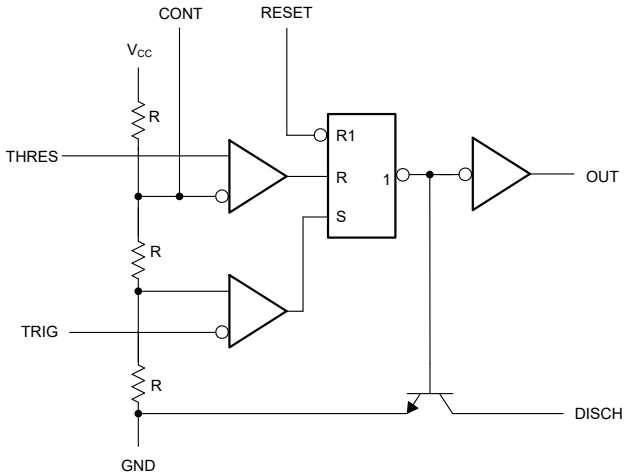

Simplified Schematic (Each Timer)

3 Description

The Nx556 and Sx556 devices provide two independent timing circuits of the NA555, NE555, SA555, or SE555 type in each package. These circuits operate in an astable or monostable mode with external resistor-capacitor (RC) timing control. The basic timing provided by the RC time constant is controlled actively by modulating the bias of the control-voltage input.

Each timer has a trigger level equal to approximately one-third of the supply voltage and a threshold level equal to approximately two-thirds of the supply voltage. These levels can be altered by use of the control voltage pin (CONT). When the trigger input (TRIG) is less than the trigger level, the flip-flop is set and the output goes high. If TRIG is greater than the trigger level and the threshold input (THRES) is greater than the threshold level, the flip-flop is reset and the output is low. The reset input (RESET) overrides all other inputs and is used to initiate a new timing cycle. If RESET is low, the flip-flop is reset and the output is low. Whenever the output is low, a low-impedance path is provided between the discharge pin (DISCH) and the ground pin (GND). Tie all unused inputs to an appropriate logic level to prevent false triggering.

Device Information

PART NUMBER	OPERATING TEMPERATURE	PACKAGE(1)
NA556	T_A = –40°C to +105°C	D (SOIC, 14)
		N (PDIP, 14)
NE556	T_A = 0°C to 70°C	D (SOIC, 14)
		DB (SSOP, 14)
		N (PDIP, 14)
		NS (SO, 14)
SA556	T_A = –40°C to +85°C	N (PDIP, 14)
SE556	T_A = –55°C to +125°C	J (CDIP, 14)

(1) For more information, see Section 10.

An IMPORTANT NOTICE at the end of this data sheet addresses availability, warranty, changes, use in safety-critical applications, intellectual property matters and other important disclaimers. PRODUCTION DATA.

Table of Contents

1 Features....1
2 Applications....1
3 Description....1
4 Pin Configuration and Functions....2
5 Specifications....3
5.1 Absolute Maximum Ratings....3
5.2 ESD Ratings....3
5.3 Recommended Operating Conditions....3
5.4 Thermal Information....3
5.5 Electrical Characteristics....4
5.6 Switching Characteristics....6
6 Detailed Description....7
6.1 Overview....7
6.2 Functional Block Diagram....7
6.3 Feature Description....8
6.4 Device Functional Modes....9
7 Application and Implementation....10
7.1 Application Information....10
7.2 Typical Applications....10
8 Device and Documentation Support....13
8.1 Receiving Notification of Documentation Updates....13
8.2 Support Resources....13
8.3 Trademarks....13
8.4 Electrostatic Discharge Caution....13
8.5 Glossary....13
9 Revision History....13
10 Mechanical, Packaging, and Orderable Information....14

4 Pin Configuration and Functions

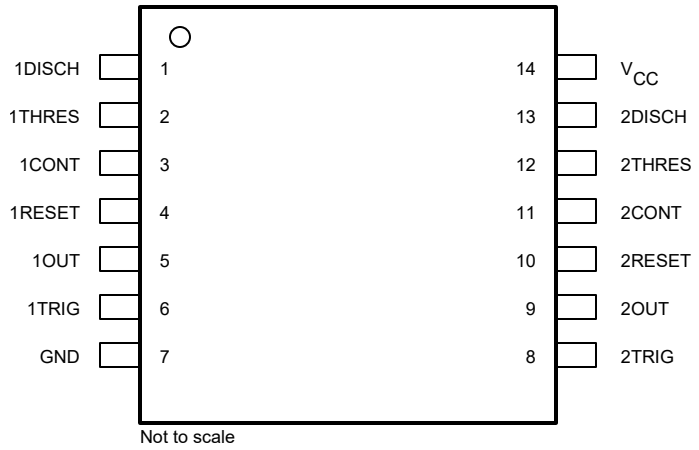

Figure 4-1. NA556: D, 14-Pin SOIC, and N, 14-Pin PDIP
NE556: D, 14-Pin SOIC, DB, 14-Pin SSOP, N, 14-Pin PDIP, and NS, 14-Pin SO
SA556: N, 14-Pin PDIP
SE556: J, 14-Pin CDIP
(Top View)

Table 4-1. Pin Functions

PIN		TYPE	DESCRIPTION
NAME	NO.		
CONT	3, 11	Input	Controls comparator thresholds. Outputs 2/3 V_{CC} and allows bypass capacitor connection.
DISCH	1, 13	Output	Open collector output to discharge timing capacitor.
GND	7	—	Ground.
OUT	5, 9	Output	High current timer output signal.
RESET	4, 10	Input	Active low reset input forces output and discharge low.
THRES	2, 12	Input	End of timing input. THRES > CONT sets output low and discharge low.
TRIG	6, 8	Input	Start of timing input. TRIG < 1/2 CONT sets output high and discharge open.
V_{CC}	14	—	Power-supply voltage.

Copyright © 2025 Texas Instruments Incorporated

5 Specifications

5.1 Absolute Maximum Ratings

over operating free-air temperature range (unless otherwise noted)[1]

			MIN	MAX	UNIT
V_{CC}	Supply voltage[2]			18	V
V_I	Input voltage: CONT, RESET, THRES, and TRIG			V_{CC}	V
I_O	Output current			±225	mA
T_J	Operating virtual junction temperature			150	°C
	Lead temperature 1.6mm (1/16 inch) from case	J package, 60 seconds		300	°C
		D, N, or NS package, 10 seconds		260	
T_{stg}	Storage temperature		–65	150	°C

(1) Operation outside the *Absolute Maximum Ratings* may cause permanent device damage. *Absolute Maximum Ratings* do not imply functional operation of the device at these or any other conditions beyond those listed under *Recommended Operating Conditions*. If used outside the *Recommended Operating Conditions* but within the *Absolute Maximum Ratings*, the device may not be fully functional, and this may affect device reliability, functionality, performance, and shorten the device lifetime.
(2) All voltage values are with respect to network ground terminal.

5.2 ESD Ratings

			VALUE	UNIT
$V_{(ESD)}$	Electrostatic discharge	Human-body model (HBM), per ANSI/ESDA/JEDEC JS-001[1]	±500	V
		Charged device model (CDM), per ANSI/ESDA/JEDEC JS-002[2]	±1500	

(1) JEDEC document JEP155 states that 500V HBM allows safe manufacturing with a standard ESD control process.
(2) JEDEC document JEP157 states that 250V CDM allows safe manufacturing with a standard ESD control process.

5.3 Recommended Operating Conditions

			MIN	MAX	UNIT
V_{CC}	Supply voltage	NA556, NE556, SA556	4.5	16	V
		SE556	4.5	18	
I_O	Output current			±200	mA
T_A	Operating free-air temperature	NA556	–40	105	°C
		NE556	0	70	
		SA556	–40	85	
		SE556	–55	125	

5.4 Thermal Information

THERMAL METRIC[1]		NA556, NE556	NE556	SE556	NA556, NE556, SA556	NE556	UNIT
		D (SOIC)	DB (SSOP)	J (CDIP)	N (PDIP)	NS (SOP)	
		14 PINS	14 PINS	14 PINS	14 PINS	14 PINS	
$R_{\theta JA}$	Junction-to-ambient thermal resistance	91.4	104.5	86.1	73.4	89.5	°C/W
$R_{\theta JC(top)}$	Junction-to-case (top) thermal resistance	51.7	56.3	38.8	51.7	47.3	°C/W
$R_{\theta JB}$	Junction-to-board thermal resistance	49.6	64.1	73.5	47.6	52.9	°C/W
ψ_{JT}	Junction-to-top characterization parameter	12.3	14.0	32.4	29.5	11.3	°C/W
ψ_{JB}	Junction-to-board characterization parameter	49.1	63.3	68.7	47.0	52.3	°C/W
$R_{\theta JC(bot)}$	Junction-to-case (bottom) thermal resistance	N/A	N/A	20.1	N/A	N/A	°C/W

(1) For more information about traditional and new thermal metrics, see the *Semiconductor and IC package thermal metrics* application report.

Copyright © 2025 Texas Instruments Incorporated

5.5 Electrical Characteristics

at V_{CC} = 5V to 15V and T_A = 25°C (unless otherwise noted)

PARAMETER		TEST CONDITIONS		MIN	TYP	MAX	UNIT
V_T	Threshold voltage level	V_{CC} = 15V	NA556, NE556, SA556	8.8	10	11.2	V
			SE556	9.4	10	10.6	
		V_{CC} = 5V	NA556, NE556, SA556	2.4	3.3	4.2	
			SE556	2.7	3.3	4	
I_T	Threshold current[(1)]				30	250	nA
V_{TRIG}	Trigger voltage level	V_{CC} = 15V	NA556, NE556, SA556	4.5	5	5.6	V
			SE556	4.8	5	5.2	
		V_{CC} = 15V, T_A = –55°C to +125°C	SE556	3		6	
		V_{CC} = 5V	NA556, NE556, SA556	1.1	1.67	2.2	
			SE556	1.45	1.67	1.9	
		V_{CC} = 5V, T_A = –55°C to +125°C	SE556			1.9	
I_{TRIG}	Trigger current	V_{TRIG} = 0V	NA556, NE556, SA556		0.5	2	µA
			SE556		0.5	0.9	
V_{RESET}	Reset voltage level			0.3	0.7	1	V
		T_A = –55°C to +125°C	SE556			1.1	
I_{RESET}	Reset current	V_{RESET} = V_{CC}			0.1	0.4	mA
		V_{RESET} = 0V	NA556, NE556, SA556		–0.4	1.5	
			SE556		–0.4	–1	
I_{DISCH}	Discharge switch off-state current				20	100	nA
V_{CONT}	Control voltage (open circuit)	V_{CC} = 15V	NA556, NE556, SA556	9	10	11	V
			SE556	9.6	10	10.4	
		V_{CC} = 15V, T_A = –55°C to +125°C	SE556	9.6		10.4	
		V_{CC} = 5V	NA556, NE556, SA556	2.6	3.3	4	
			SE556	2.9	3.3	3.8	
		V_{CC} = 5V, T_A = –55°C to +125°C	SE556	2.9		3.8	

Copyright © 2025 Texas Instruments Incorporated

5.5 Electrical Characteristics (continued)

at V_{CC} = 5V to 15V and T_A = 25°C (unless otherwise noted)

PARAMETER		TEST CONDITIONS		MIN	TYP	MAX	UNIT
V_{OL}	Low-level output voltage	V_{CC} = 15V, I_{OL} = 10mA	NA556, NE556, SA556		0.1	0.25	V
			SE556		0.1	0.15	
		V_{CC} = 15V, I_{OL} = 10mA, T_A = –55°C to +125°C	SE556			0.2	
		V_{CC} = 15V, I_{OL} = 50mA	NA556, NE556, SA556		0.4	0.75	
			SE556		0.4	0.5	
		V_{CC} = 15V, I_{OL} = 50mA, T_A = –55°C to +125°C	SE556			1	
		V_{CC} = 15V, I_{OL} = 100mA	NA556, NE556, SA556		2	2.5	
			SE556		2	2.2	
		V_{CC} = 15V, I_{OL} = 100mA, T_A = –55°C to +125°C	SE556			2.7	
		V_{CC} = 15V, I_{OL} = 200mA			2.5		
		V_{CC} = 5V, I_{OL} = 3.5mA, T_A = –55°C to +125°C	SE556			0.35	
		V_{CC} = 5V, I_{OL} = 5mA	NA556, NE556, SA556		0.1	0.25	
			SE556		0.1	0.15	
		V_{CC} = 5V, I_{OL} = 5mA, T_A = –55°C to +125°C	SE556			0.8	
		V_{CC} = 5V, I_{OL} = 8mA	NA556, NE556, SA556		0.15	0.3	
			SE556		0.15	0.25	
V_{OH}	High-level output voltage	V_{CC} = 15V, I_{OH} = –100mA	NA556, NE556, SA556	12.75	13.3		V
			SE556	13	13.3		
		V_{CC} = 15V, I_{OH} = –100mA, T_A = –55°C to +125°C	SE555	12			
		V_{CC} = 15V, I_{OH} = –200mA			12.5		
		V_{CC} = 5V, I_{OH} = –100mA	NA556, NE556, SA556	2.75	3.3		
			SE556	3	3.3		
		V_{CC} = 5V, I_{OH} = –100mA, T_A = –55°C to +125°C	SE555	2			

Copyright © 2025 Texas Instruments Incorporated

5.5 Electrical Characteristics (continued)

at V_{CC} = 5V to 15V and T_A = 25°C (unless otherwise noted)

PARAMETER		TEST CONDITIONS		MIN	TYP	MAX	UNIT
I_{CC}	Supply current	Output low, no load, V_{CC} = 15V	NA556, NE556, SA556		20	30	mA
			SE556		20	24	
		Output low, no load, V_{CC} = 5V	NA556, NE556, SA556		6	12	
			SE556		6	10	
		Output high, no load, V_{CC} = 15V	NA556, NE556, SA556		18	26	
			SE556		18	20	
		Output high, no load, V_{CC} = 5V	NA556, NE556, SA556		4	10	
			SE556		4	8	

(1) This parameter influences the maximum value of the timing resistors R_A and R_B in the circuit of Figure 6-3. For example, when V_{CC} = 5V, the maximum value is $R_A + R_B \cong 3.4M\Omega$, and for V_{CC} = 15V, the maximum value is $R_A + R_B \cong 10M\Omega$.

5.6 Switching Characteristics

V_{CC} = 5V and 15V, T_A = 25°C (unless otherwise noted); characteristic values are specified by design, characterization, or both, and are not production tested

PARAMETER		TEST CONDITIONS[1]		MIN	TYP	MAX	UNIT
	Temperature coefficient of timing interval	Each timer, monostable[2], T_A = MIN to MAX	NA556, NE556, SA556		50		ppm/°C
			SE556		30	100	
		Each timer, astable[3], T_A = MIN to MAX	NA556, NE556, SA556		150		
			SE556		90		
		Timer 1 – Timer 2, T_A = MIN to MAX			±10		
	Supply voltage sensitivity of timing interval	Each timer, monostable[2]	NA556, NE556, SA556		0.1	0.5	%/V
			SE556		0.05	0.2	
		Each timer, astable[3]	NA556, NE556, SA556		0.3		
			SE556		0.15		
		Timer 1 – Timer 2	NA556, NE556, SA556		±0.2		
			SE556		±0.1		
t_r	Output pulse rise time	C_L = 15pF, T_A = 25°C, 20% to 80%	NA556, NE556, SA556		100	300	ns
			SE556		100	200	
t_f	Output pulse fall time	C_L = 15pF, T_A = 25°C, 80% to 20%	NA556, NE556, SA556		100	300	ns
			SE556		100	200	

(1) For conditions shown as MIN or MAX, use the appropriate value specified under *Recommended Operating Conditions*.
(2) Values specified are for a device in a monostable circuit similar to Figure 6-2, with the following component values: R_A = 2kΩ to 100kΩ, C_T = 0.1μF.
(3) Values specified are for a device in an astable circuit similar to Figure 6-3, with the following component values: R_A = 1kΩ to 100kΩ, C_T = 0.1μF.

Copyright © 2025 Texas Instruments Incorporated

6 Detailed Description

6.1 Overview

The Nx556 or Sx556 is a precision timing device used for general-purpose timing applications. In the time-delay or monostable mode of operation, the timed interval is controlled by a single external resistor and capacitor network. In the astable mode of operation, the frequency and duty cycle can be controlled independently with two external resistors and a single external capacitor. RESET overrides TRIG, which overrides THRES (when CONT pin is 2/3 V_{CC}).

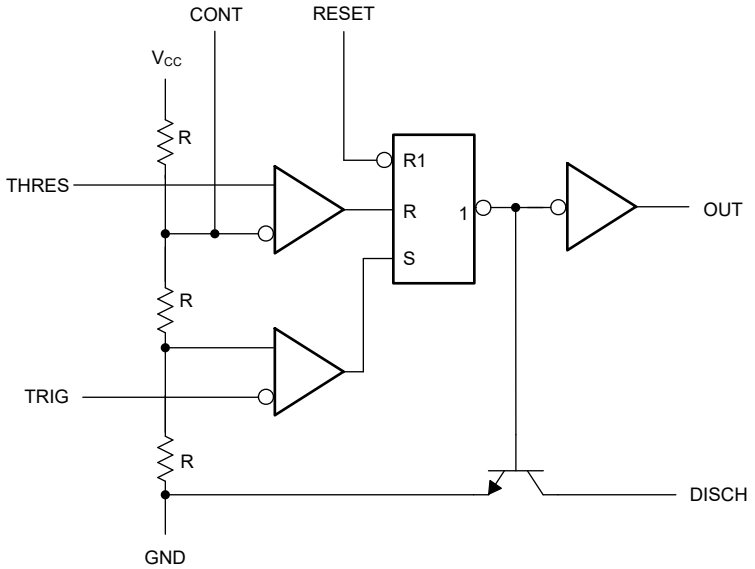

Figure 6-1. Simplified Schematic

6.2 Functional Block Diagram

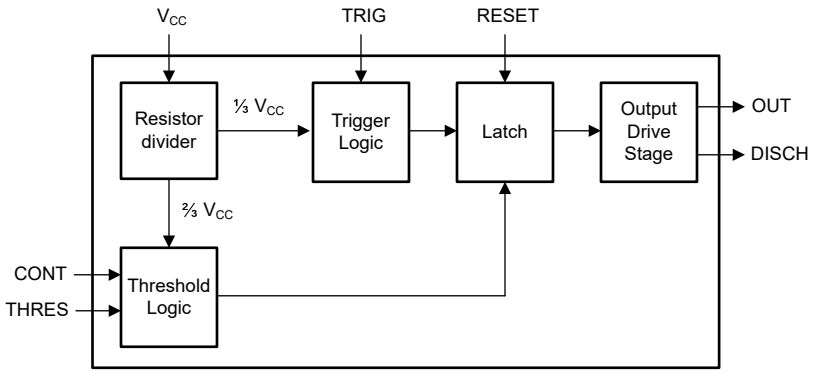

6.3 Feature Description

6.3.1 Monostable Operation

For monostable operation, Figure 6-2 shows how either of the timers can be connected. If the output is low, application of a negative-going pulse to the trigger (TRIG) sets the internal latch; the output goes high, and discharge pin (DISCH) becomes open drain. Capacitor C_T then is charged through R_A until the voltage across the capacitor reaches the threshold voltage of the threshold (THRES) input. If TRIG has returned to a high level, the output of the threshold comparator resets the internal latch, the output goes low, the discharge pin goes low, which quickly discharges capacitor C_T.

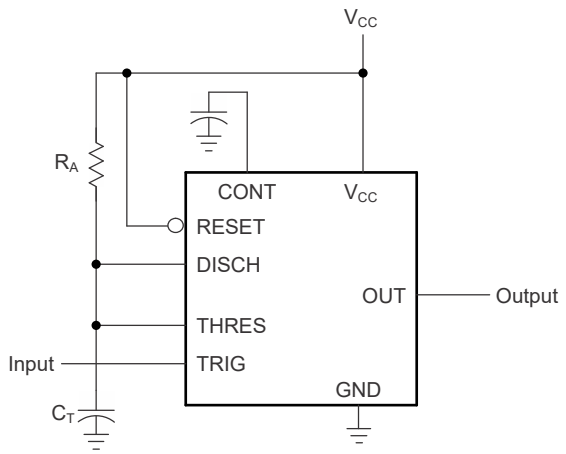

Figure 6-2. Circuit for Monostable Operation

Monostable operation is initiated when TRIG voltage is less than the trigger threshold. If initiated, the sequence ends only if TRIG is high for at least 10µs before the end of the timing interval. When the trigger is grounded, the comparator storage time can be as long as 10µs, which limits the minimum monostable pulse duration to 10µs. The output pulse duration is approximately $t_w = 1.1 \times R_A C_T$. The threshold levels and charge rates both are directly proportional to the supply voltage, V_{CC}. The timing interval is, therefore, independent of the supply voltage, so long as the supply voltage is constant during the time interval. In monostable applications, set the trip point of the trigger input by a voltage applied to CONT.

Applying a negative-going trigger pulse simultaneously to RESET and TRIG during the timing interval discharges capacitor C_T and reinitiates the cycle, commencing on the positive edge of the reset pulse. The output is held low as long as the reset pulse is low. To prevent false triggering, when RESET is not asserted low, connect RESET to V_{CC}. If the RESET function is required and the pin is driven by external logic or a microcontroller, use a pullup resistor to V_{CC} (such as 10kΩ) to prevent the RESET pin from floating. If the RESET function is not required, short the RESET pin directly to the V_{CC} pin.

6.3.2 Astable Operation

As shown in Figure 6-3, adding a second resistor, R_B, to the circuit of Figure 6-2 and connecting the trigger input to the threshold input causes the timer to self-trigger and run as a multivibrator. The capacitor C_T charges through R_A and R_B and then discharges through R_B only. Therefore, the duty cycle is controlled by the values of R_A and R_B.

This astable connection results in capacitor C_T charging and discharging between the threshold-voltage level ($\cong 0.67 \times V_{CC}$) and the trigger-voltage level ($\cong 0.33 \times V_{CC}$). As in the monostable circuit, charge and discharge times (and, therefore, the frequency and duty cycle) are independent of the supply voltage. To reduce distortion, use at maximum frequency of 100kHz or below. If higher-frequency operation is required, consider using the TLC556 LinCMOS™ Timer instead.

Copyright © 2025 Texas Instruments Incorporated

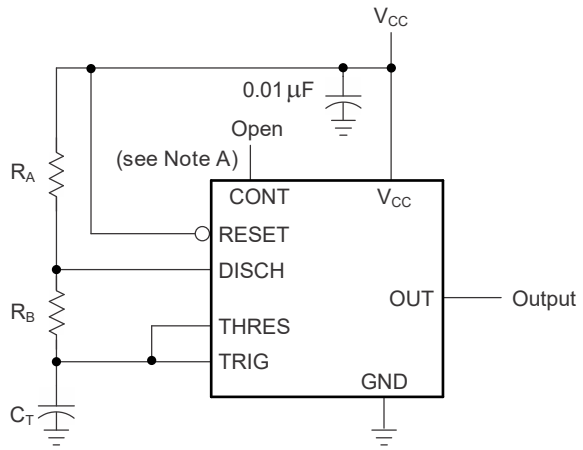

Decouple CONT voltage to ground with a capacitor to improve operation. Reevaluate for individual applications.

Figure 6-3. Circuit for Astable Operation

$$t_H \cong 0.693 \times (R_A + R_B) \times C_T \quad (1)$$

$$t_L \cong 0.693 \times R_B \times C_T \quad (2)$$

Other useful relationships for period, frequency, and driver-referred and waveform-referred duty cycle are shown as follows:

$$T = t_H + t_L \cong 0.693 \times (R_A + 2R_B) \times C_T \quad (3)$$

$$f = \frac{1}{T} \cong \frac{1.44}{(R_A + 2R_B) \times C_T} \quad (4)$$

$$\text{Output driver duty cycle} = \frac{t_L}{T} \cong \frac{R_B}{R_A + 2R_B} \quad (5)$$

$$\text{Output waveform duty cycle} = \frac{t_H}{T} \cong 1 - \frac{R_B}{R_A + 2R_B} = \frac{R_A + R_B}{R_A + 2R_B} \quad (6)$$

6.4 Device Functional Modes

Table 6-1 shows the device truth table. For a valid reset voltage condition, use an external pullup resistor to V_{CC} (if using the RESET functionality), or short the RESET pin directly to V_{CC} (if the RESET functionality is not used).

Table 6-1. Function Table

RESET VOLTAGE(1)	TRIGGER VOLTAGE(1)	THRESHOLD VOLTAGE(1)	OUTPUT	DISCHARGE SWITCH
LOW	Irrelevant	Irrelevant	Low	On
> MAX	< 1/3 × V_{CC}	Irrelevant(2)	High	Off
> MAX	> 1/3 × V_{CC}	> 2/3 × V_{CC}	Low	On
> MAX	> 1/3 × V_{CC}	< 2/3 × V_{CC}	As previously established	

(1) Voltage levels shown are nominal.
(2) CONT pin open or 2/3 × V_{CC}.

7 Application and Implementation

Note

Information in the following applications sections is not part of the TI component specification, and TI does not warrant its accuracy or completeness. TI's customers are responsible for determining suitability of components for their purposes, as well as validating and testing their design implementation to confirm system functionality.

7.1 Application Information

The Nx556 and Sx556 timer devices use resistor and capacitor charging delay to provide a programmable time delay or operating frequency. The following sections present a simplified discussion of the design process. Reset mode forces output and discharge low and provides a small reduction in supply current.

7.2 Typical Applications

7.2.1 Pulse-Width Modulation

To modify timer operation, apply an external voltage (or current) to CONT to modulate the internal threshold and trigger voltages. Figure 7-1 shows a circuit for pulse-width modulation. A continuous input pulse train triggers the monostable circuit, and a control signal modulates the threshold voltage. Figure 7-2 shows the resulting duty cycle versus control voltage transfer function. Attempting to run under 10% duty cycle can result in inconsistent output pulses. Attempting to run close to 100% duty cycle results in frequency division by 2, then 3, then 4.

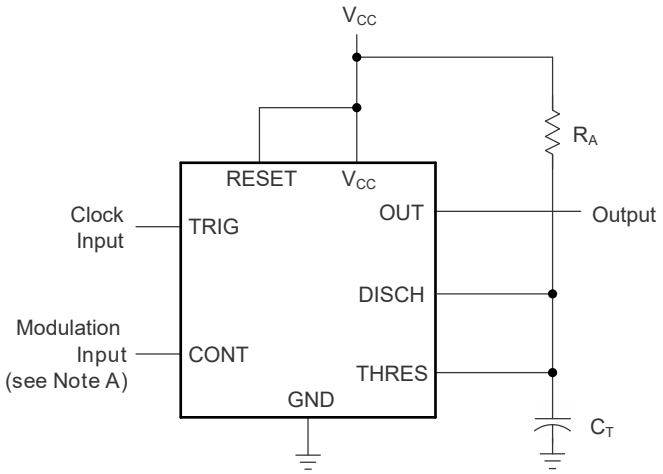

A. The modulating signal can be direct or capacitively coupled to CONT. For direct coupling, consider the effects of modulation source voltage and impedance on the bias of the timer.

Figure 7-1. Circuit for Pulse-Width Modulation

7.2.1.1 Design Requirements

The clock input must have V_{OL} and V_{OH} levels that are less than and greater than 1/3 V_{CC}, respectively. Clock input V_{OL} time must be less than minimum output high time; therefore, a high (positive) duty cycle clock is recommended. Minimum recommended modulation voltage is 1V. Lower CONT voltage can greatly increase threshold comparator propagation delay and storage time. The application must be tolerant of a nonlinear transfer function; the relationship between modulation input and pulse width is not linear because the capacitor charge is RC-based with an negative exponential curve.

7.2.1.2 Detailed Design Procedure

Choose R_A and C_T so that $R_A \times C_T$ is same or less than clock input period. Figure 7-2 shows the non linear relationship between control voltage and output duty cycle. Duty cycle is function of control voltage and clock period relative to RC time constant.

Copyright © 2025 Texas Instruments Incorporated

7.2.1.3 Application Curve

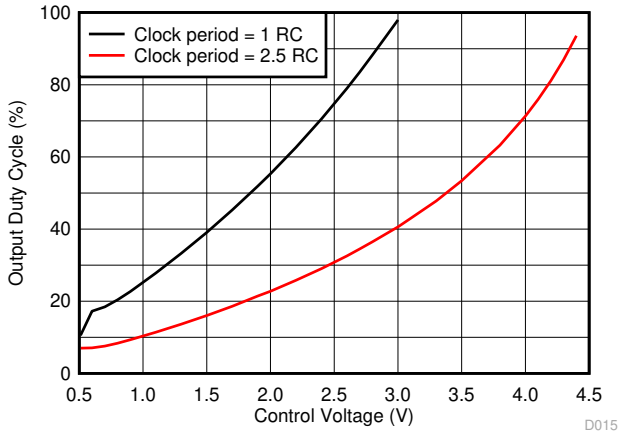

Figure 7-2. Pulse-Width-Modulation vs Control Voltage Clock Duty Cycle 98%, V_{CC} = 5V

7.2.2 Pulse-Position Modulation

Figure 7-3 shows that any of these timers can be used as a pulse-position modulator. This application modulates the threshold voltage, and thereby, the time delay of a free-running oscillator. Figure 7-4 and Figure 7-5 show the output frequency and duty cycle versus control voltage.

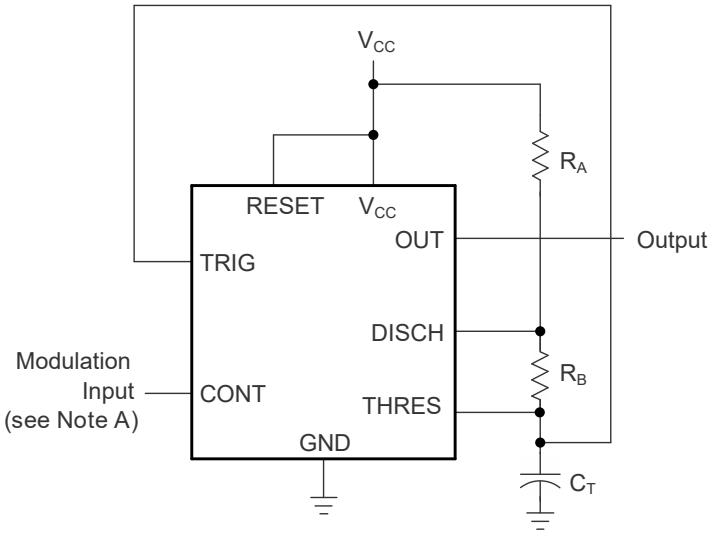

A. The modulating signal can be direct or capacitively coupled to CONT. For direct coupling, consider the effects of modulation source voltage and impedance on the bias of the timer.

Figure 7-3. Circuit for Pulse-Position Modulation

7.2.2.1 Design Requirements

Both dc- and ac-coupled modulation input changes the upper and lower voltage thresholds for the timing capacitor. Both frequency and duty cycle vary with the modulation voltage. Control voltage less than 1V can result in output glitches instead of a steady-output pulse stream. Table 7-1 gives example design requirements.

Table 7-1. Design Parameters

DESIGN PARAMETER	EXAMPLE VALUE
R_A	3kΩ
R_B	309Ω
C_T	1nF

7.2.2.2 Detailed Design Procedure

The nominal output frequency and duty cycle for control voltage set to 2/3 of V_{CC} can be determined using formulas in *Section 6.3.2*.

7.2.2.3 Application Curves

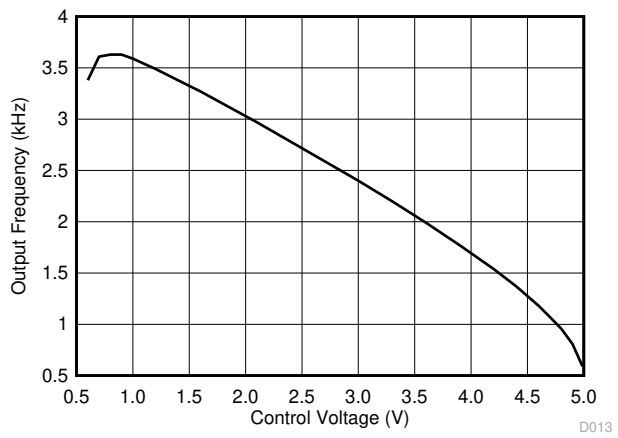

Figure 7-4. Pulse-Position-Modulation Frequency vs Control Voltage, V_{CC} = 5V

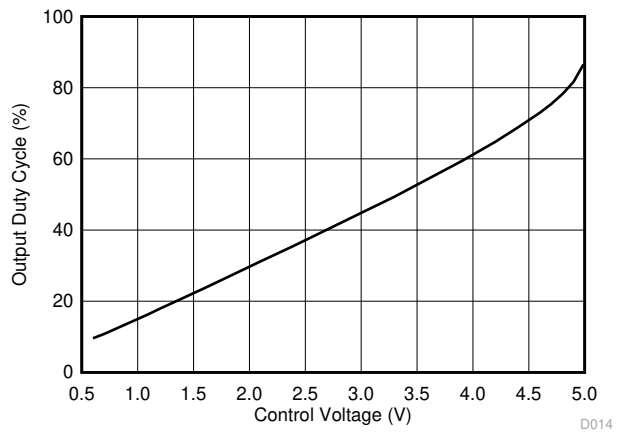

Figure 7-5. Pulse-Position-Modulation Duty Cycle vs Control Voltage, V_{CC} = 5V

Copyright © 2025 Texas Instruments Incorporated

8 Device and Documentation Support

TI offers an extensive line of development tools. Tools and software to evaluate the performance of the device, generate code, and develop solutions are listed below.

8.1 Receiving Notification of Documentation Updates

To receive notification of documentation updates, navigate to the device product folder on ti.com. Click on *Notifications* to register and receive a weekly digest of any product information that has changed. For change details, review the revision history included in any revised document.

8.2 Support Resources

TI E2E™ support forums are an engineer's go-to source for fast, verified answers and design help — straight from the experts. Search existing answers or ask your own question to get the quick design help you need.

Linked content is provided "AS IS" by the respective contributors. They do not constitute TI specifications and do not necessarily reflect TI's views; see TI's Terms of Use.

8.3 Trademarks

TI E2E™ is a trademark of Texas Instruments.
All trademarks are the property of their respective owners.

8.4 Electrostatic Discharge Caution

This integrated circuit can be damaged by ESD. Texas Instruments recommends that all integrated circuits be handled with appropriate precautions. Failure to observe proper handling and installation procedures can cause damage.

ESD damage can range from subtle performance degradation to complete device failure. Precision integrated circuits may be more susceptible to damage because very small parametric changes could cause the device not to meet its published specifications.

8.5 Glossary

TI Glossary	This glossary lists and explains terms, acronyms, and definitions.

9 Revision History

NOTE: Page numbers for previous revisions may differ from page numbers in the current version.

Changes from Revision H (December 2024) to Revision I (March 2025) — **Page**

- Updated *Device Information* table to show correct temperature range for each device 1
- Added thermal specifications for DB package in *Thermal Information* 3
- Changed minimum monostable pulse duration from 1µs to 10µs in *Monostable Operation* to fix typo 8

Changes from Revision G (June 2006) to Revision H (December 2024) — **Page**

- Updated the numbering format for tables, figures, and cross-references throughout the document 1
- Added *Pin Configuration and Functions*, *Specifications*, *Detailed Description*, *Application and Implementation*, *Device and Documentation Support* sections and associated subsections 1
- Updated *Description*, *Applications*, and *Features* sections 1
- Added DB package to data sheet 1
- Deleted package thermal information and related footnotes from *Absolute Maximum Ratings* 3
- Added *ESD Ratings* table and HBM and CDM specifications 3
- Deleted redundant input voltage (V_I) specification in *Recommended Operating Conditions* 3
- Changed *Power Dissipation Ratings* table to *Thermal Information*, and updated per-package thermal specifications 3
- Changed *Operating Characteristics* title to *Switching Characteristics*, and clarified that values are specified by design or characterization and are not production tested 6

Copyright © 2025 Texas Instruments Incorporated

- Deleted initial error of timing interval specification in *Switching Characteristics* and clarified that output rise and fall times are 20% to 80% and 80% to 20%, respectively..... 6

10 Mechanical, Packaging, and Orderable Information

The following pages include mechanical, packaging, and orderable information. This information is the most current data available for the designated devices. This data is subject to change without notice and revision of this document. For browser-based versions of this data sheet, refer to the left-hand navigation.

Copyright © 2025 Texas Instruments Incorporated

PACKAGING INFORMATION

Orderable part number	Status (1)	Material type (2)	Package | Pins	Package qty | Carrier	RoHS (3)	Lead finish/ Ball material (4)	MSL rating/ Peak reflow (5)	Op temp (°C)	Part marking (6)
JM38510/10902BCA	Active	Production	CDIP (J) | 14	25 | TUBE	No	SNPB	N/A for Pkg Type	-55 to 125	JM38510 /10902BCA
JM38510/10902BCA.A	Active	Production	CDIP (J) | 14	25 | TUBE	No	SNPB	N/A for Pkg Type	-55 to 125	JM38510 /10902BCA
NA556D	Obsolete	Production	SOIC (D) | 14	-	-	Call TI	Call TI	-40 to 105	NA556
NA556DR	Active	Production	SOIC (D) | 14	2500 | LARGE T&R	Yes	NIPDAU	Level-1-260C-UNLIM	-40 to 105	NA556
NA556DR.A	Active	Production	SOIC (D) | 14	2500 | LARGE T&R	Yes	NIPDAU	Level-1-260C-UNLIM	-40 to 105	NA556
NA556N	Active	Production	PDIP (N) | 14	25 | TUBE	Yes	NIPDAU	N/A for Pkg Type	-40 to 105	NA556N
NA556N.A	Active	Production	PDIP (N) | 14	25 | TUBE	Yes	NIPDAU	N/A for Pkg Type	-40 to 105	NA556N
NE556D	Obsolete	Production	SOIC (D) | 14	-	-	Call TI	Call TI	0 to 70	NE556
NE556DBR	Active	Production	SSOP (DB) | 14	2000 | LARGE T&R	Yes	NIPDAU	Level-1-260C-UNLIM	0 to 70	N556
NE556DBR.A	Active	Production	SSOP (DB) | 14	2000 | LARGE T&R	Yes	NIPDAU	Level-1-260C-UNLIM	0 to 70	N556
NE556DR	Active	Production	SOIC (D) | 14	2500 | LARGE T&R	Yes	NIPDAU	Level-1-260C-UNLIM	0 to 70	NE556
NE556DR.A	Active	Production	SOIC (D) | 14	2500 | LARGE T&R	Yes	NIPDAU	Level-1-260C-UNLIM	0 to 70	NE556
NE556N	Active	Production	PDIP (N) | 14	25 | TUBE	Yes	NIPDAU	N/A for Pkg Type	0 to 70	NE556N
NE556N.A	Active	Production	PDIP (N) | 14	25 | TUBE	Yes	NIPDAU	N/A for Pkg Type	0 to 70	NE556N
NE556NSR	Active	Production	SOP (NS) | 14	2000 | LARGE T&R	Yes	NIPDAU	Level-1-260C-UNLIM	0 to 70	NE556
NE556NSR.A	Active	Production	SOP (NS) | 14	2000 | LARGE T&R	Yes	NIPDAU	Level-1-260C-UNLIM	0 to 70	NE556
SA556N	Active	Production	PDIP (N) | 14	25 | TUBE	Yes	NIPDAU	N/A for Pkg Type	-40 to 85	SA556N
SA556N.A	Active	Production	PDIP (N) | 14	25 | TUBE	Yes	NIPDAU	N/A for Pkg Type	-40 to 85	SA556N
SE556J	Active	Production	CDIP (J) | 14	25 | TUBE	No	SNPB	N/A for Pkg Type	-55 to 125	SE556J
SE556J.A	Active	Production	CDIP (J) | 14	25 | TUBE	No	SNPB	N/A for Pkg Type	-55 to 125	SE556J
SE556JB	Active	Production	CDIP (J) | 14	25 | TUBE	No	SNPB	N/A for Pkg Type	-55 to 125	SE556JB
SE556JB.A	Active	Production	CDIP (J) | 14	25 | TUBE	No	SNPB	N/A for Pkg Type	-55 to 125	SE556JB

(1) **Status:** For more details on status, see our product life cycle.

(2) **Material type:** When designated, preproduction parts are prototypes/experimental devices, and are not yet approved or released for full production. Testing and final process, including without limitation quality assurance, reliability performance testing, and/or process qualification, may not yet be complete, and this item is subject to further changes or possible discontinuation. If available for ordering, purchases will be subject to an additional waiver at checkout, and are intended for early internal evaluation purposes only. These items are sold without warranties of any kind.

(3) **RoHS values:** Yes, No, RoHS Exempt. See the TI RoHS Statement for additional information and value definition.

(4) **Lead finish/Ball material:** Parts may have multiple material finish options. Finish options are separated by a vertical ruled line. Lead finish/Ball material values may wrap to two lines if the finish value exceeds the maximum column width.

(5) **MSL rating/Peak reflow:** The moisture sensitivity level ratings and peak solder (reflow) temperatures. In the event that a part has multiple moisture sensitivity ratings, only the lowest level per JEDEC standards is shown. Refer to the shipping label for the actual reflow temperature that will be used to mount the part to the printed circuit board.

(6) **Part marking:** There may be an additional marking, which relates to the logo, the lot trace code information, or the environmental category of the part.

Multiple part markings will be inside parentheses. Only one part marking contained in parentheses and separated by a "~" will appear on a part. If a line is indented then it is a continuation of the previous line and the two combined represent the entire part marking for that device.

Important Information and Disclaimer: The information provided on this page represents TI's knowledge and belief as of the date that it is provided. TI bases its knowledge and belief on information provided by third parties, and makes no representation or warranty as to the accuracy of such information. Efforts are underway to better integrate information from third parties. TI has taken and continues to take reasonable steps to provide representative and accurate information but may not have conducted destructive testing or chemical analysis on incoming materials and chemicals. TI and TI suppliers consider certain information to be proprietary, and thus CAS numbers and other limited information may not be available for release.

In no event shall TI's liability arising out of such information exceed the total purchase price of the TI part(s) at issue in this document sold by TI to Customer on an annual basis.

TAPE AND REEL INFORMATION

REEL DIMENSIONS

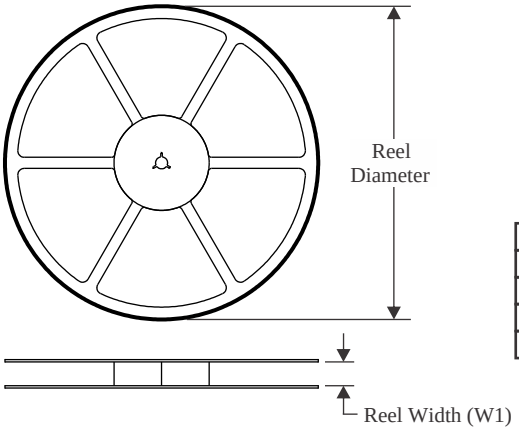

TAPE DIMENSIONS

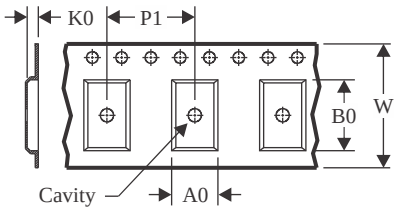

A0	Dimension designed to accommodate the component width
B0	Dimension designed to accommodate the component length
K0	Dimension designed to accommodate the component thickness
W	Overall width of the carrier tape
P1	Pitch between successive cavity centers

QUADRANT ASSIGNMENTS FOR PIN 1 ORIENTATION IN TAPE

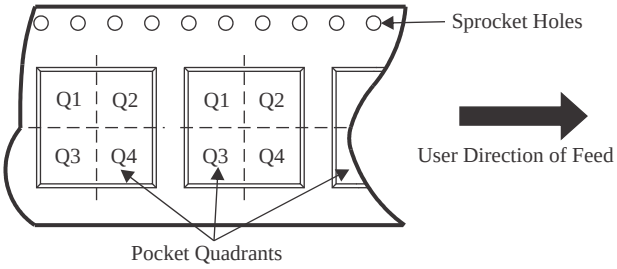

*All dimensions are nominal

Device	Package Type	Package Drawing	Pins	SPQ	Reel Diameter (mm)	Reel Width W1 (mm)	A0 (mm)	B0 (mm)	K0 (mm)	P1 (mm)	W (mm)	Pin1 Quadrant
NA556DR	SOIC	D	14	2500	330.0	16.4	6.5	9.0	2.1	8.0	16.0	Q1
NE556DBR	SSOP	DB	14	2000	330.0	16.4	8.35	6.6	2.4	12.0	16.0	Q1
NE556DR	SOIC	D	14	2500	330.0	16.4	6.5	9.0	2.1	8.0	16.0	Q1
NE556DR	SOIC	D	14	2500	330.0	16.4	6.5	9.0	2.1	8.0	16.0	Q1
NE556NSR	SOP	NS	14	2000	330.0	16.4	8.1	10.4	2.5	12.0	16.0	Q1

TAPE AND REEL BOX DIMENSIONS

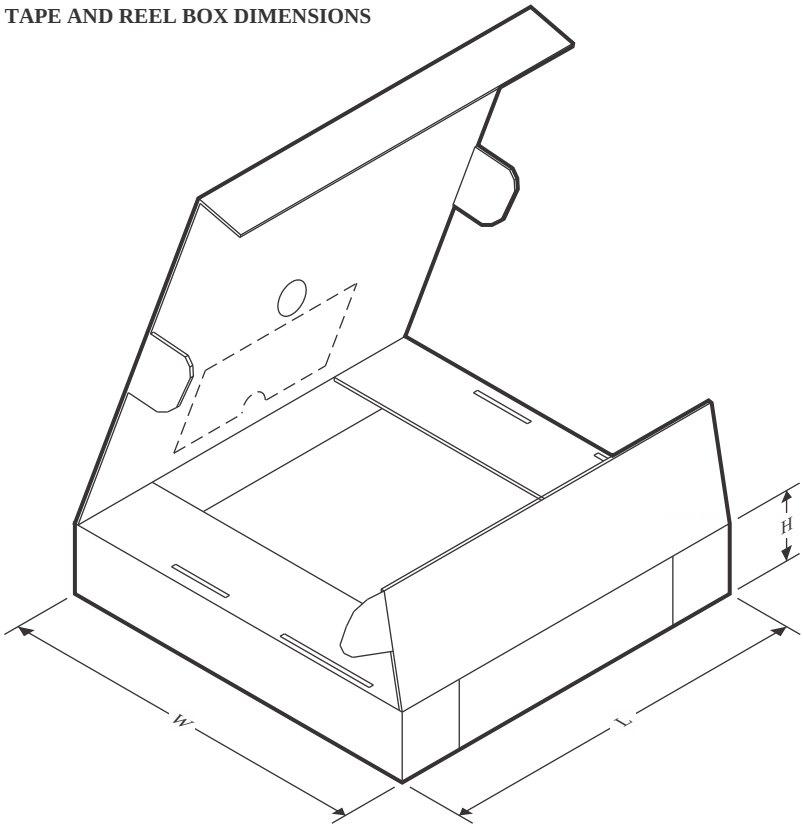

*All dimensions are nominal

Device	Package Type	Package Drawing	Pins	SPQ	Length (mm)	Width (mm)	Height (mm)
NA556DR	SOIC	D	14	2500	353.0	353.0	32.0
NE556DBR	SSOP	DB	14	2000	353.0	353.0	32.0
NE556DR	SOIC	D	14	2500	353.0	353.0	32.0
NE556DR	SOIC	D	14	2500	353.0	353.0	32.0
NE556NSR	SOP	NS	14	2000	353.0	353.0	32.0

TUBE

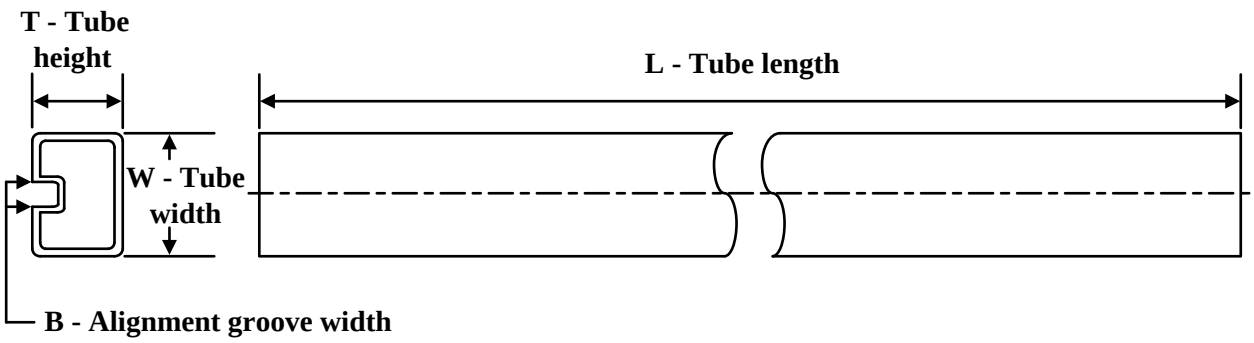

*All dimensions are nominal

Device	Package Name	Package Type	Pins	SPQ	L (mm)	W (mm)	T (µm)	B (mm)
NA556N	N	PDIP	14	25	506	13.97	11230	4.32
NA556N	N	PDIP	14	25	506	13.97	11230	4.32
NA556N.A	N	PDIP	14	25	506	13.97	11230	4.32
NA556N.A	N	PDIP	14	25	506	13.97	11230	4.32
NE556N	N	PDIP	14	25	506	13.97	11230	4.32
NE556N	N	PDIP	14	25	506	13.97	11230	4.32
NE556N.A	N	PDIP	14	25	506	13.97	11230	4.32
NE556N.A	N	PDIP	14	25	506	13.97	11230	4.32
SA556N	N	PDIP	14	25	506	13.97	11230	4.32
SA556N.A	N	PDIP	14	25	506	13.97	11230	4.32

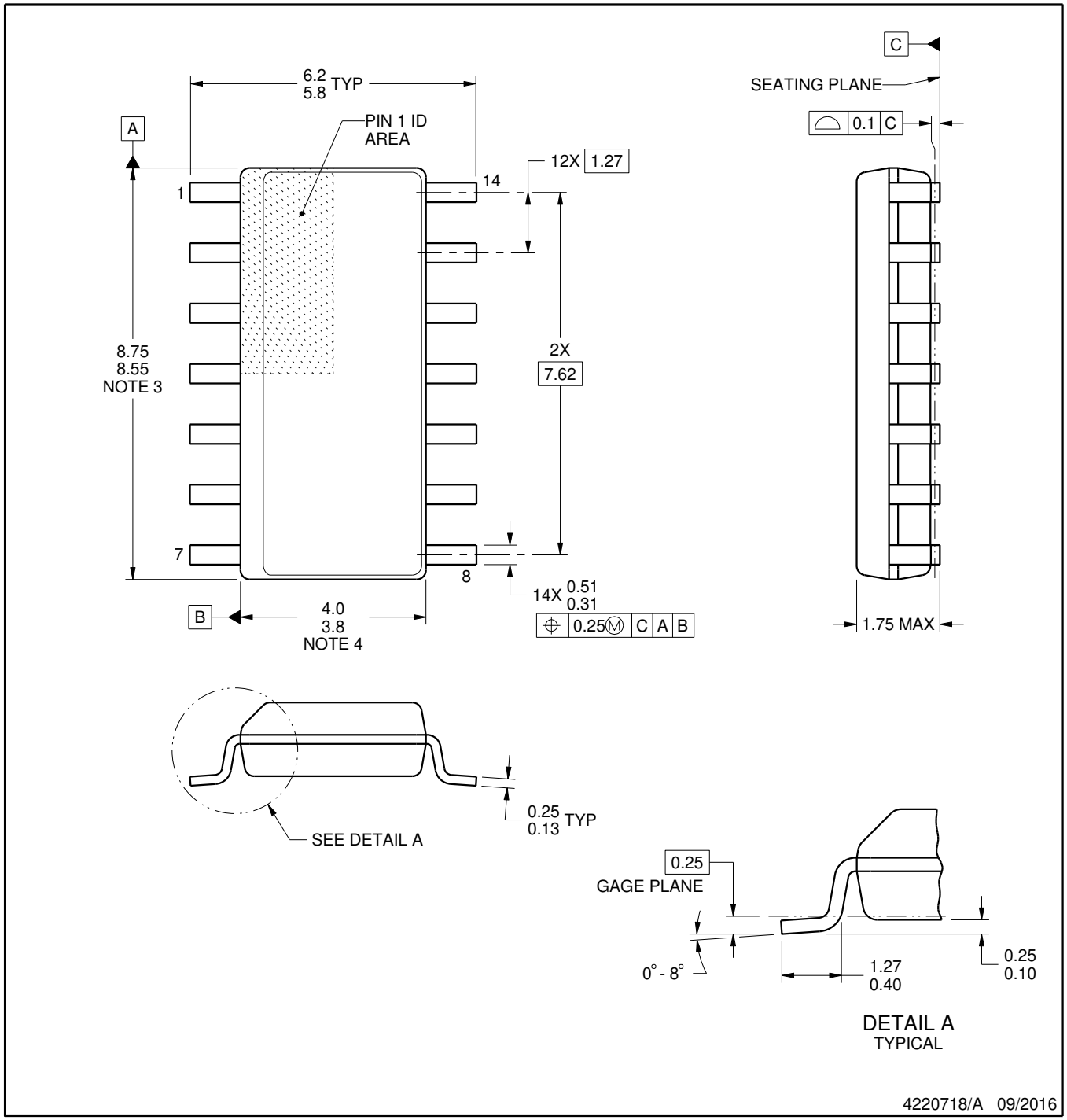

NOTES:

1. All linear dimensions are in millimeters. Dimensions in parenthesis are for reference only. Dimensioning and tolerancing per ASME Y14.5M.
2. This drawing is subject to change without notice.
3. This dimension does not include mold flash, protrusions, or gate burrs. Mold flash, protrusions, or gate burrs shall not exceed 0.15 mm, per side.
4. This dimension does not include interlead flash. Interlead flash shall not exceed 0.43 mm, per side.
5. Reference JEDEC registration MS-012, variation AB.

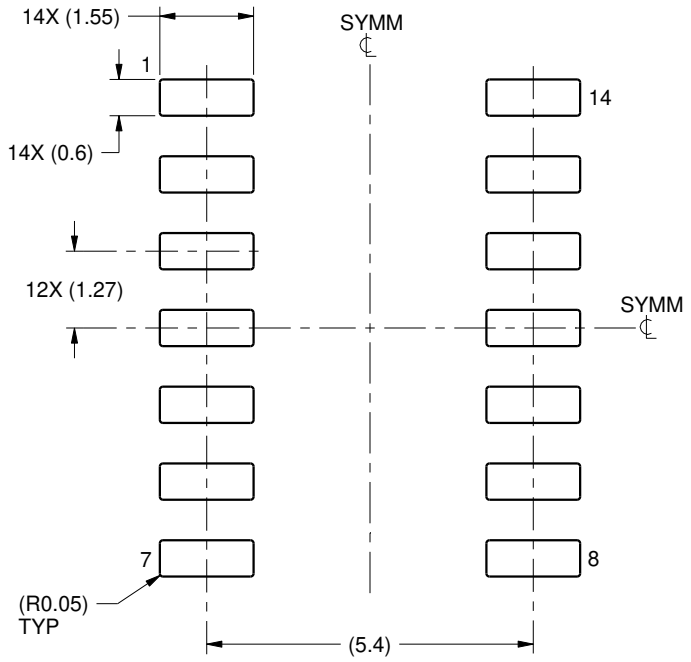

LAND PATTERN EXAMPLE
SCALE:8X

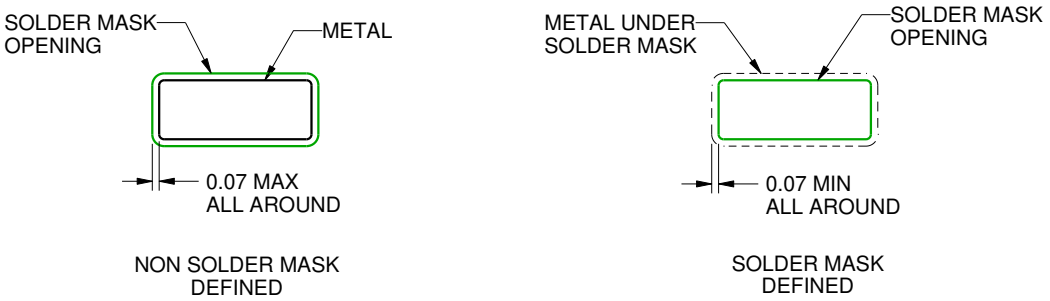

SOLDER MASK DETAILS

4220718/A 09/2016

NOTES: (continued)

6. Publication IPC-7351 may have alternate designs.
7. Solder mask tolerances between and around signal pads can vary based on board fabrication site.

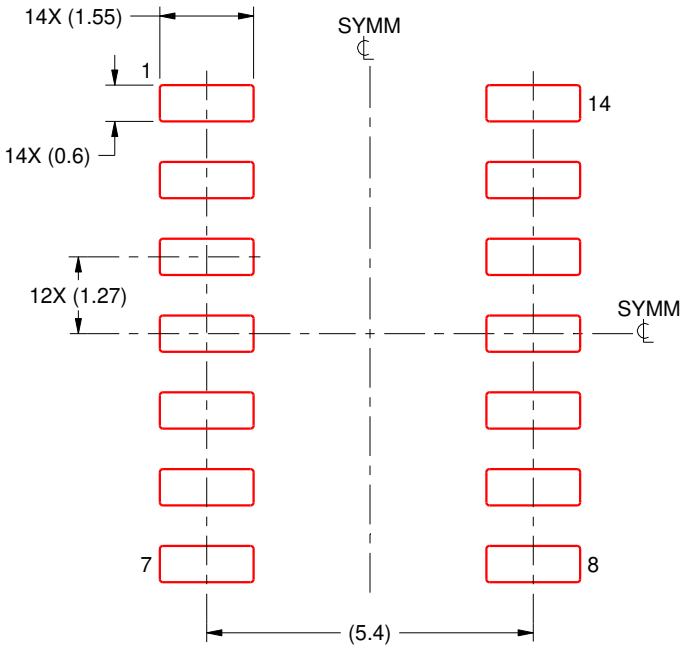

SOLDER PASTE EXAMPLE
BASED ON 0.125 mm THICK STENCIL
SCALE:8X

4220718/A 09/2016

NOTES: (continued)

8. Laser cutting apertures with trapezoidal walls and rounded corners may offer better paste release. IPC-7525 may have alternate design recommendations.
9. Board assembly site may have different recommendations for stencil design.

MECHANICAL DATA

NS (R-PDSO-G)** **PLASTIC SMALL-OUTLINE PACKAGE**

14-PINS SHOWN

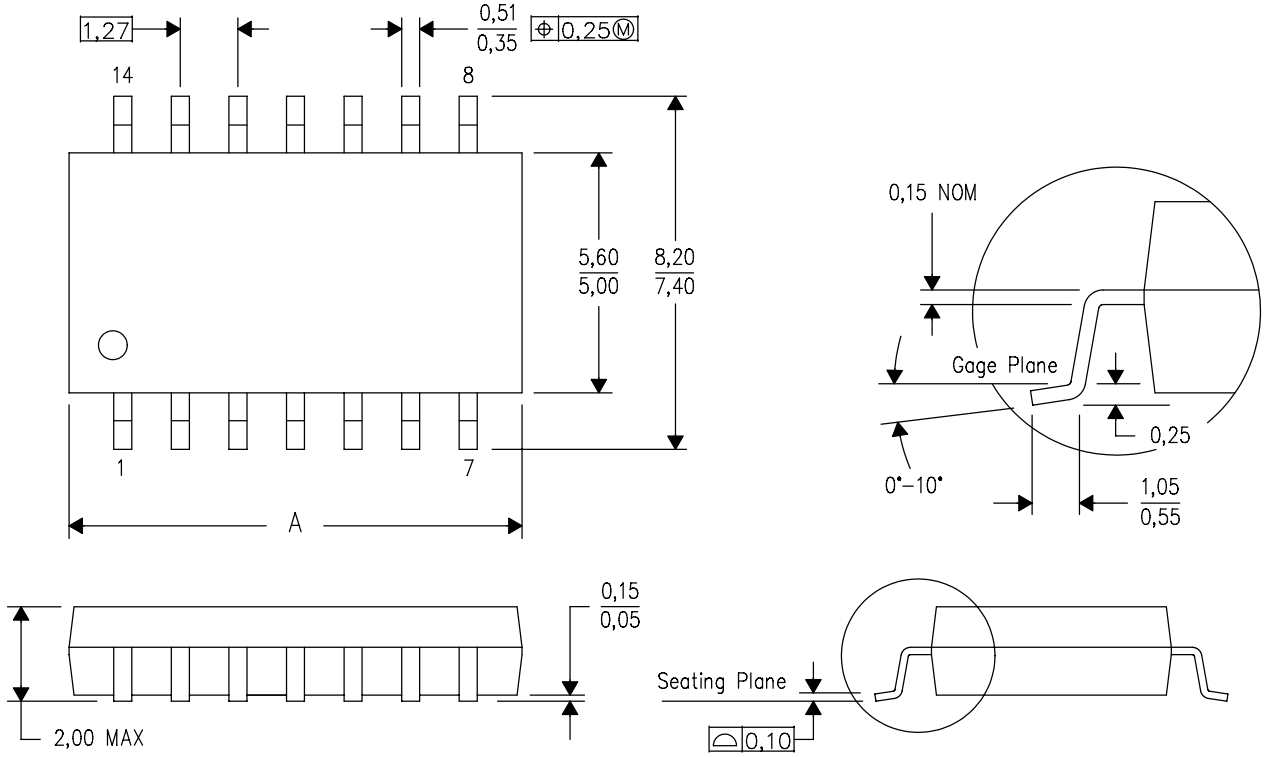

DIM \ PINS **	14	16	20	24
A MAX	10,50	10,50	12,90	15,30
A MIN	9,90	9,90	12,30	14,70

4040062/C 03/03

NOTES:
A. All linear dimensions are in millimeters.
B. This drawing is subject to change without notice.
C. Body dimensions do not include mold flash or protrusion, not to exceed 0,15.

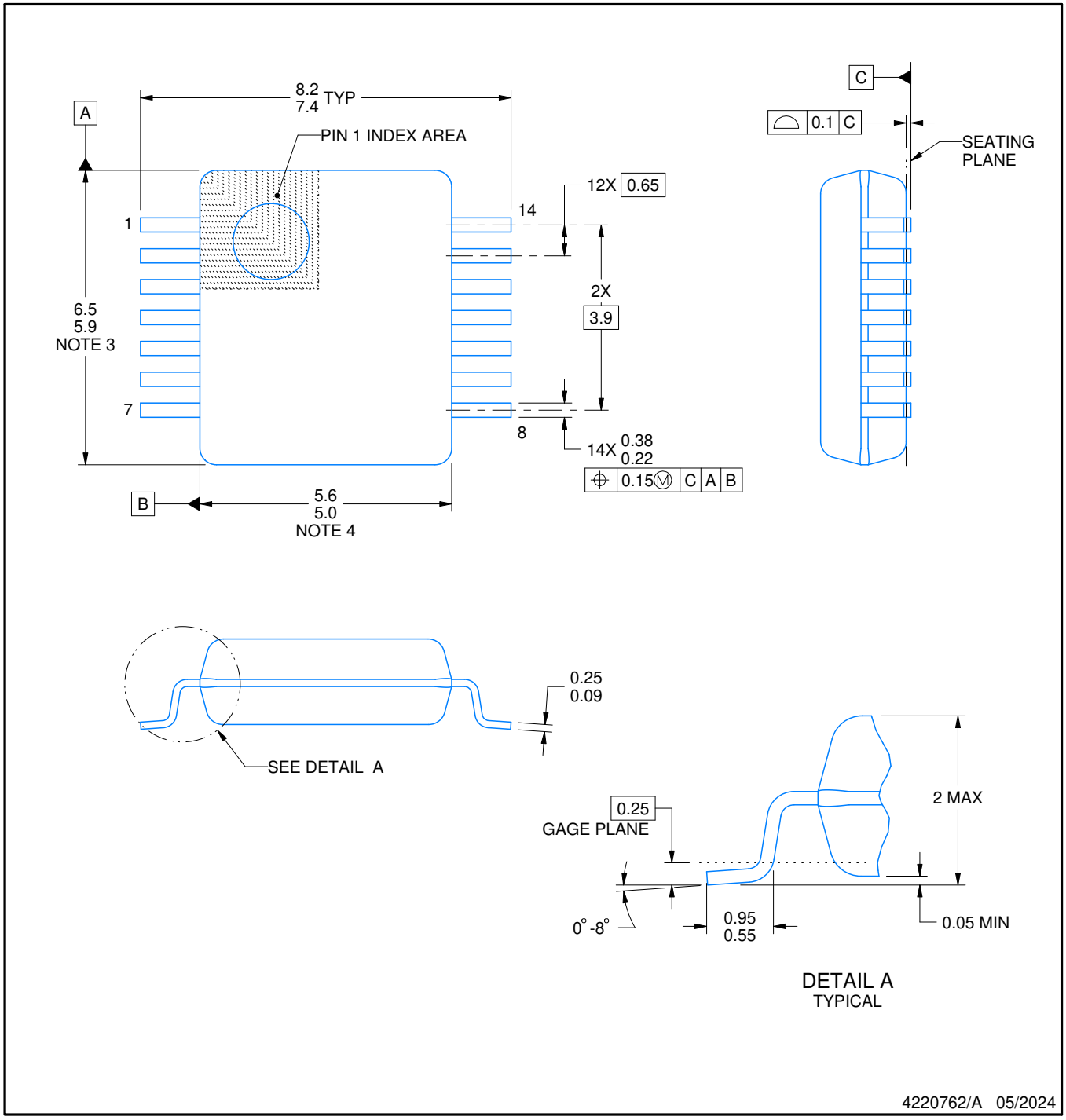

NOTES:

1. All linear dimensions are in millimeters. Any dimensions in parenthesis are for reference only. Dimensioning and tolerancing per ASME Y14.5M.
2. This drawing is subject to change without notice.
3. This dimension does not include mold flash, protrusions, or gate burrs. Mold flash, protrusions, or gate burrs shall not exceed 0.15 mm per side.
4. Reference JEDEC registration MO-150.

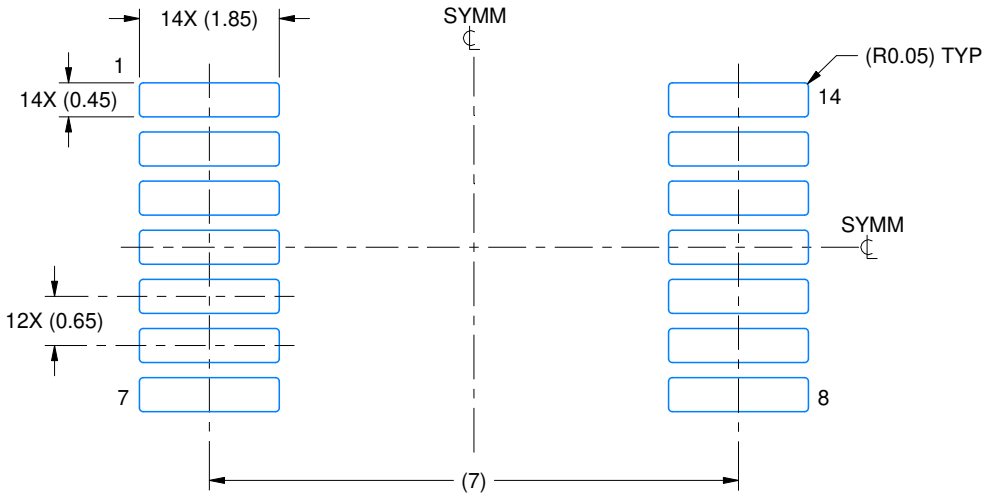

LAND PATTERN EXAMPLE
EXPOSED METAL SHOWN
SCALE: 10X

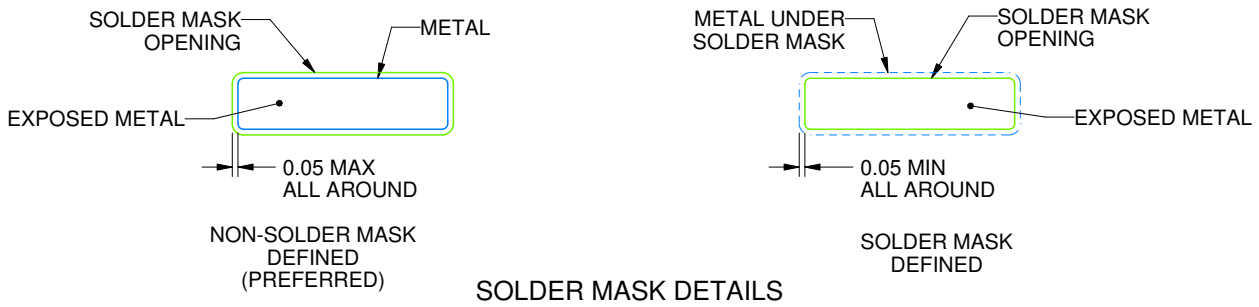

SOLDER MASK DETAILS

4220762/A 05/2024

NOTES: (continued)

5. Publication IPC-7351 may have alternate designs.
6. Solder mask tolerances between and around signal pads can vary based on board fabrication site.

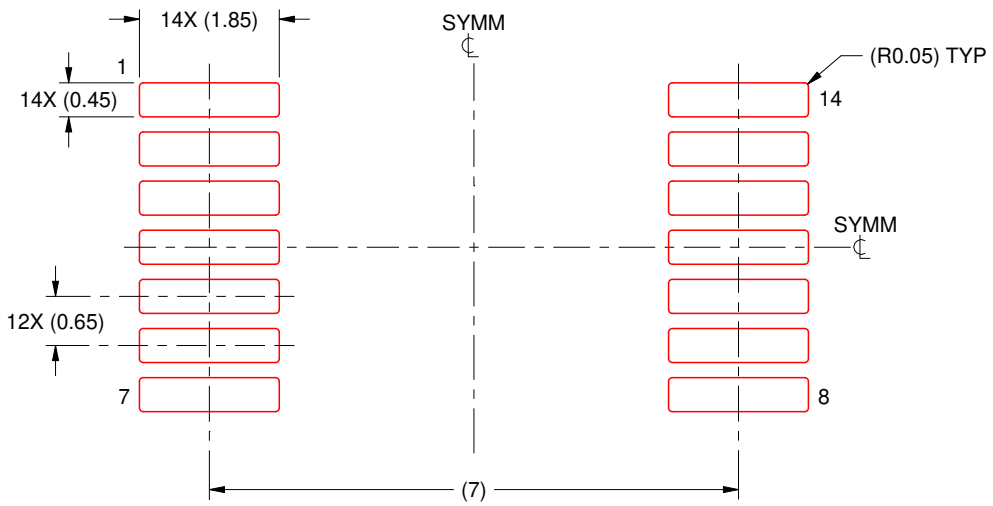

SOLDER PASTE EXAMPLE
BASED ON 0.125 mm THICK STENCIL
SCALE: 10X

4220762/A 05/2024

NOTES: (continued)

7. Laser cutting apertures with trapezoidal walls and rounded corners may offer better paste release. IPC-7525 may have alternate design recommendations.
8. Board assembly site may have different recommendations for stencil design.

J 14

CDIP - 5.08 mm max height

CERAMIC DUAL IN LINE PACKAGE

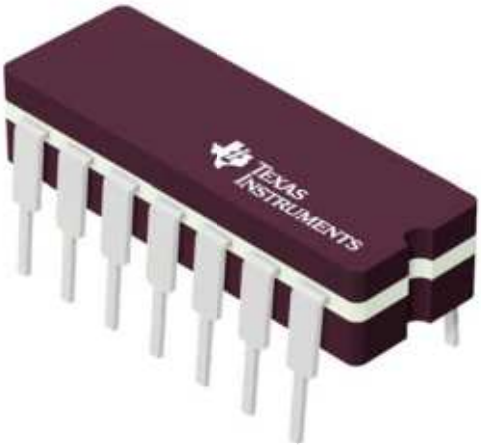

Images above are just a representation of the package family, actual package may vary.
Refer to the product data sheet for package details.

4040083-5/G

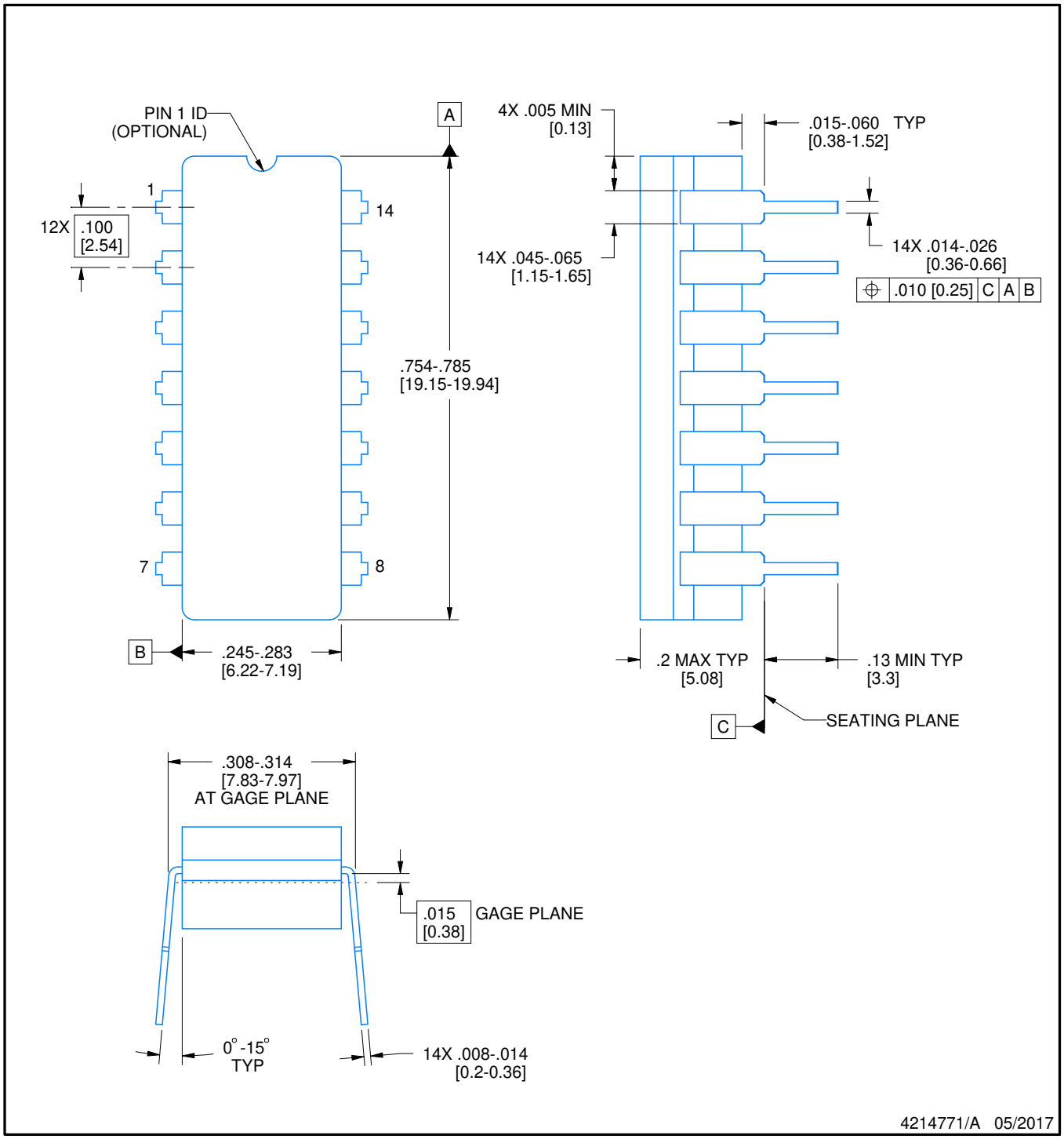

NOTES:

1. All controlling linear dimensions are in inches. Dimensions in brackets are in millimeters. Any dimension in brackets or parenthesis are for reference only. Dimensioning and tolerancing per ASME Y14.5M.
2. This drawing is subject to change without notice.
3. This package is hermitically sealed with a ceramic lid using glass frit.
4. Index point is provided on cap for terminal identification only and on press ceramic glass frit seal only.
5. Falls within MIL-STD-1835 and GDIP1-T14.

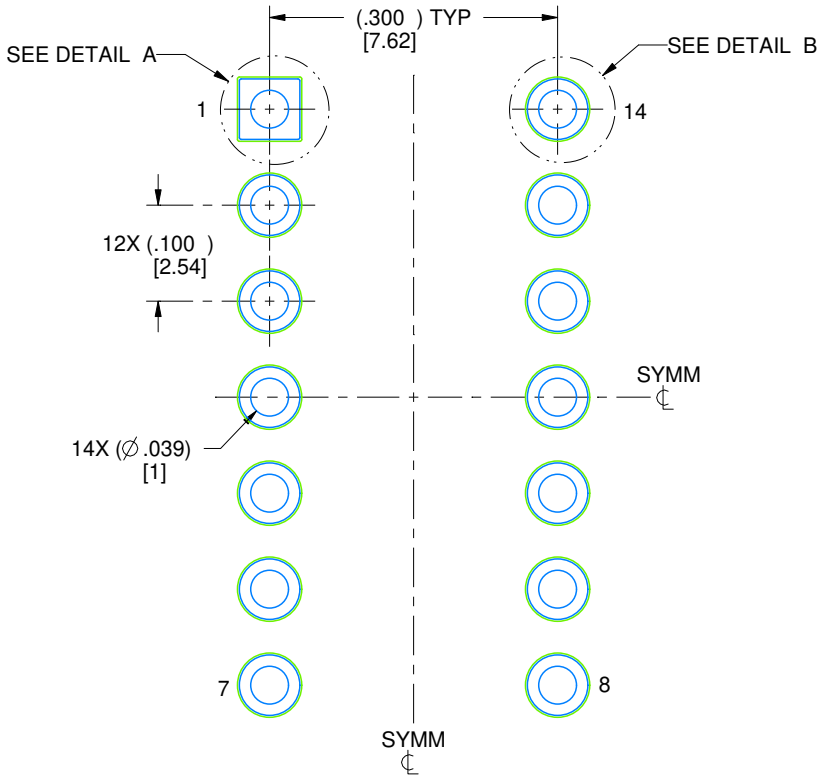

LAND PATTERN EXAMPLE
NON-SOLDER MASK DEFINED
SCALE: 5X

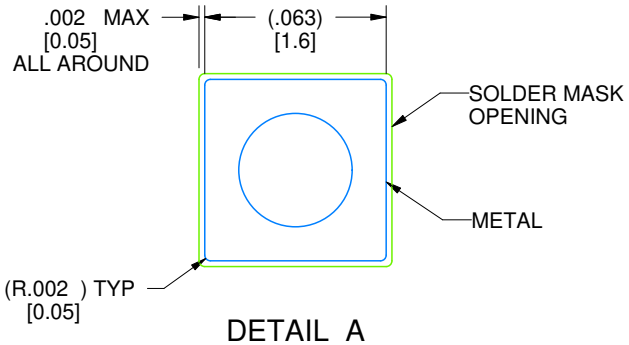

DETAIL A
SCALE: 15X

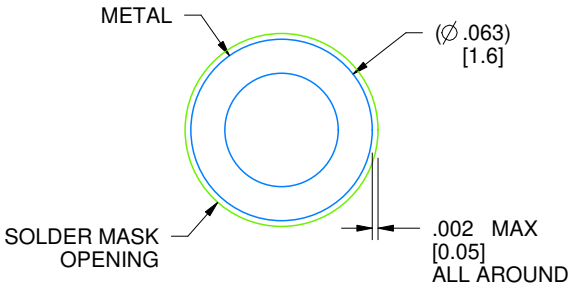

DETAIL B
13X, SCALE: 15X

4214771/A 05/2017

N (R–PDIP–T**) PLASTIC DUAL–IN–LINE PACKAGE

16 PINS SHOWN

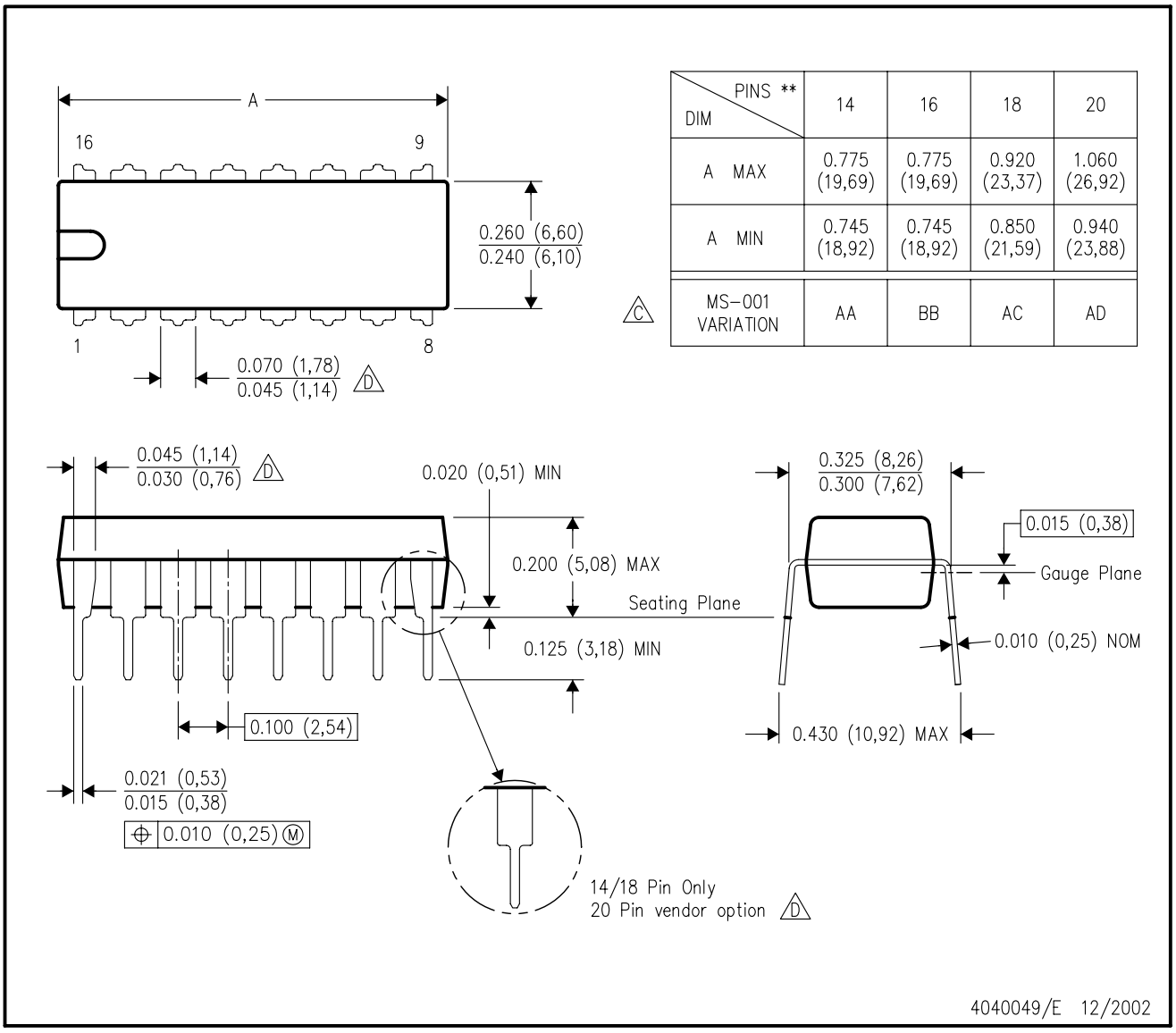

DIM \ PINS **	14	16	18	20
A MAX	0.775 (19,69)	0.775 (19,69)	0.920 (23,37)	1.060 (26,92)
A MIN	0.745 (18,92)	0.745 (18,92)	0.850 (21,59)	0.940 (23,88)
MS–001 VARIATION (C)	AA	BB	AC	AD

NOTES:
A. All linear dimensions are in inches (millimeters).
B. This drawing is subject to change without notice.
C. Falls within JEDEC MS–001, except 18 and 20 pin minimum body length (Dim A).
D. The 20 pin end lead shoulder width is a vendor option, either half or full width.

IMPORTANT NOTICE AND DISCLAIMER

TI PROVIDES TECHNICAL AND RELIABILITY DATA (INCLUDING DATASHEETS), DESIGN RESOURCES (INCLUDING REFERENCE DESIGNS), APPLICATION OR OTHER DESIGN ADVICE, WEB TOOLS, SAFETY INFORMATION, AND OTHER RESOURCES “AS IS” AND WITH ALL FAULTS, AND DISCLAIMS ALL WARRANTIES, EXPRESS AND IMPLIED, INCLUDING WITHOUT LIMITATION ANY IMPLIED WARRANTIES OF MERCHANTABILITY, FITNESS FOR A PARTICULAR PURPOSE OR NON-INFRINGEMENT OF THIRD PARTY INTELLECTUAL PROPERTY RIGHTS.

These resources are intended for skilled developers designing with TI products. You are solely responsible for (1) selecting the appropriate TI products for your application, (2) designing, validating and testing your application, and (3) ensuring your application meets applicable standards, and any other safety, security, regulatory or other requirements.

These resources are subject to change without notice. TI grants you permission to use these resources only for development of an application that uses the TI products described in the resource. Other reproduction and display of these resources is prohibited. No license is granted to any other TI intellectual property right or to any third party intellectual property right. TI disclaims responsibility for, and you fully indemnify TI and its representatives against any claims, damages, costs, losses, and liabilities arising out of your use of these resources.

TI’s products are provided subject to TI’s Terms of Sale, TI’s General Quality Guidelines, or other applicable terms available either on ti.com or provided in conjunction with such TI products. TI’s provision of these resources does not expand or otherwise alter TI’s applicable warranties or warranty disclaimers for TI products. Unless TI explicitly designates a product as custom or customer-specified, TI products are standard, catalog, general purpose devices.

TI objects to and rejects any additional or different terms you may propose.

Copyright © 2026, Texas Instruments Incorporated

Last updated 10/2025