ESD Protection with Automotive Short-to-Battery Blocking

Low Capacitance ESD Protection with short−to−battery blocking for Automotive High Speed Data Lines

NIV1241

The NIV1241 is designed to protect high speed data lines from ESD as well as short to vehicle battery situations. The ultra−low capacitance and low ESD clamping voltage make this device an ideal solution for protecting voltage sensitive high speed data lines while the low $R_{DS(on)}$ FET limits distortion on the signal lines. The flow−through style package allows for easy PCB layout and matched trace lengths necessary to maintain consistent impedance between high speed differential lines such as USB and LVDS protocols.

Features

- Low Capacitance (0.55 pF Typical, I/O to GND)
- Protection for the Following Standards:
  - IEC 61000−4−2 (Level 4) & ISO 10605
- Integrated MOSFETs:
  - Short−to−Battery Blocking
  - Short−to−USB V_{BUS} Blocking
- Wettable Flanks Device for optimal Automated Optical Inspection (AOI)
- NIV Prefix for Automotive and Other Applications Requiring Unique Site and Control Change Requirements; AEC−Q101 Qualified and PPAP Capable
- These Devices are Pb−Free, Halogen Free/BFR Free and are RoHS Compliant

Typical Applications

- Automotive High Speed Signal Pairs
- USB 2.0
- LVDS

ABSOLUTE MAXIMUM RATINGS (T_J = 25°C unless otherwise noted)

Rating	Symbol	Value	Unit
Operating Junction Temperature Range	$T_{J(max)}$	−55 to +150	°C
Storage Temperature Range	T_{STG}	−55 to +150	°C
Drain−to−Source Voltage	V_{DSS}	30	V
Gate−to−Source Voltage	V_{GS}	±10	V
Lead Temperature Soldering	T_{SLD}	260	°C
IEC 61000−4−2 Contact (ESD) IEC 61000−4−2 Air (ESD)	ESD ESD	±8 ±15	kV kV

Stresses exceeding those listed in the Maximum Ratings table may damage the device. If any of these limits are exceeded, device functionality should not be assumed, damage may occur and reliability may be affected.



WDFNW6
CASE 515AK

MARKING DIAGRAM

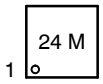

24 = Specific Device Code
M = Date Code

PIN CONFIGURATION AND SCHEMATICS

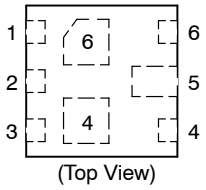

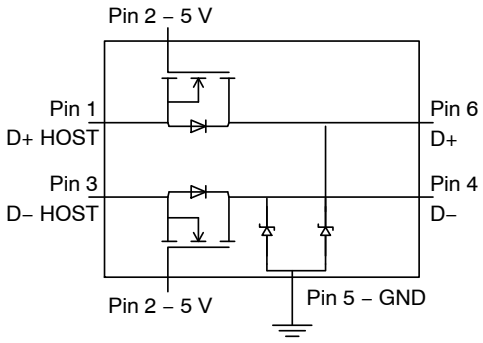

ORDERING INFORMATION

Device	Package	Shipping†
NIV1241MTWTAG	WDFNW6 (Pb−Free)	3000 / Tape & Reel

†For information on tape and reel specifications, including part orientation and tape sizes, please refer to our Tape and Reel Packaging Specification Brochure, BRD8011/D.

© Semiconductor Components Industries, LLC, 2019

ELECTRICAL CHARACTERISTICS (T_A = 25°C unless otherwise specified)

Parameter	Symbol	Conditions	Min	Typ	Max	Unit
Reverse Working Voltage	V_{RWM}	I/O Pin to GND			24	V
Breakdown Voltage	V_{BR}	I_T = 1 mA, I/O Pin to GND	24	25	28	V
Reverse Leakage Current	I_R	V_{RWM} = 24 V, I/O Pin to GND			0.5	μA
Clamping Voltage (Note 1)	V_C	IEC61000−4−2, ±8 KV Contact	See Figures 1 & 2			
Clamping Voltage TLP (Note 2) See Figures 5 & 6	V_C	I_{PP} = 8 A I_{PP} = 16 A I_{PP} = −8 A I_{PP} = −16 A		35 43 −4.4 −7.4		V V V V
Junction Capacitance Match	ΔC_J	V_R = 0 V, f = 1 MHz between I/O 1 to GND and I/O 2 to GND		1.0		%
Junction Capacitance	C_J	V_R = 0 V, f = 1 MHz between I/O Pins and GND (Pin 4 to GND, Pin 6 to GND)		0.55		pF
Drain−to−Source Breakdown Voltage	$V_{BR(DSS)}$	V_{GS} = 0 V, I_D = 100 μA	30			V
Drain−to−Source Breakdown Voltage Temperature Coefficient	$V_{BR(DSS)}/T_J$	Reference to 25°C, I_D = 100 μA		27		mV/°C
Zero Gate Voltage Drain Current	I_{DSS}	V_{GS} = 0 V, V_{DS} = 30 V			1.0	μA
Gate−to−Source Leakage Current	I_{GSS}	V_{DS} = 0 V, V_{GS} = ±5 V			±1.0	μA
Gate Threshold Voltage (Note 3)	$V_{GS(TH)}$	V_{DS} = V_{GS}, I_D = 100 μA	0.1	1.0	1.5	V
Gate Threshold Voltage Temperature Coefficient	$V_{GS(TH)}/T_J$	Reference to 25°C, I_D = 100 μA		−2.5		mV/°C
Drain−to−Source On Resistance	$R_{DS(on)}$	V_{GS} = 4.5 V, I_D = 125 mA		1.4	7.0	Ω
		V_{GS} = 2.5 V, I_D = 125 mA		2.3	7.5	
Forward Transconductance	g_{FS}	V_{DS} = 3.0 V, I_D = 125 mA		80		mS
Switching Turn−On Delay Time (Note 4)	$t_{d(ON)}$	V_{GS} = 4.5 V, V_{DS} = 24 V I_D = 125 mA, R_G = 10 VΩ		9		nS
Switching Turn−On Rise Time (Note 4)	t_r			41		nS
Switching Turn−Off Delay Time (Note 4)	$t_{d(OFF)}$			96		nS
Switching Turn−Off Fall Time (Note 4)	t_f			72		nS
Drain−to−Source Forward Diode Voltage	V_{SD}	V_{GS} = 0 V, I_s = 125 mA		0.79	0.9	V
3 dB Bandwidth	f_{BW}	R_L = 50 Ω		5		GHz

Product parametric performance is indicated in the Electrical Characteristics for the listed test conditions, unless otherwise noted. Product performance may not be indicated by the Electrical Characteristics if operated under different conditions.

1. For test procedure see Figures 3 and 4 and application note AND8307/D.
2. ANSI/ESD STM5.5.1 − Electrostatic Discharge Sensitivity Testing using Transmission Line Pulse (TLP) Model.
   TLP conditions: Z_0 = 50Ω, t_p = 100 ns, t_r = 1 ns, averaging window; t_1 = 70 ns to t_2 = 90 ns.
3. Pulse test: pulse width ≤ 300 μS, duty cycle ≤ 2%
4. Switching characteristics are independent of operating junction temperatures.

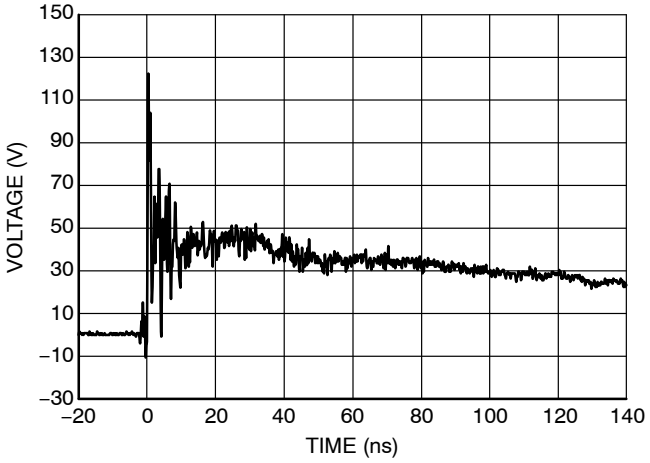

Figure 1. Typical IEC61000−4−2 +8kV Contact ESD Clamping Voltage

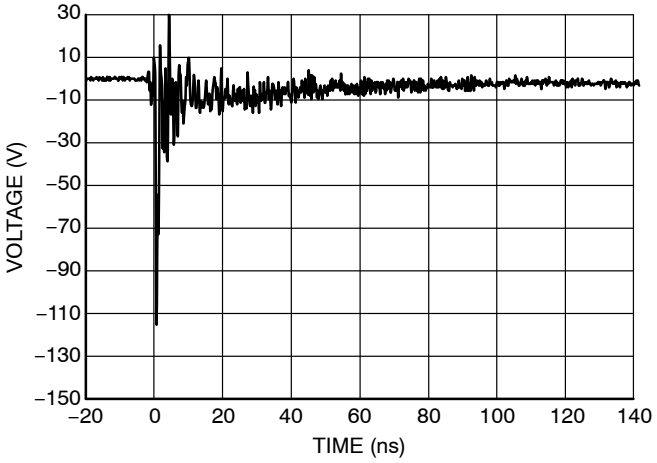

Figure 2. Typical IEC61000−4−2 −8kV Contact ESD Clamping Voltage

IEC61000−4−2 Spec.

Level	Test Voltage (kV)	First Peak Current (A)	Current at 30 ns (A)	Current at 60 ns (A)
1	2	7.5	4	2
2	4	15	8	4
3	6	22.5	12	6
4	8	30	16	8

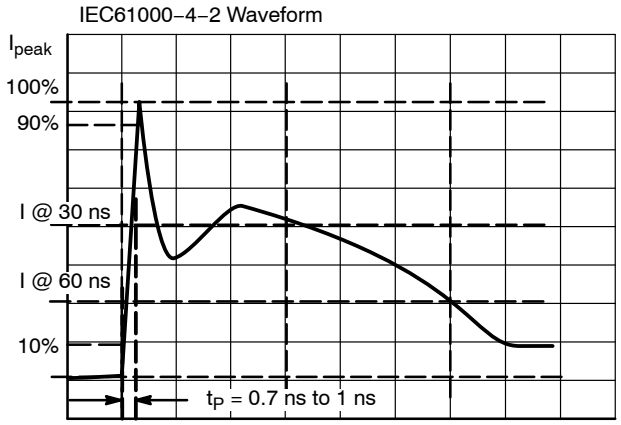

Figure 3. IEC61000−4−2 Spec

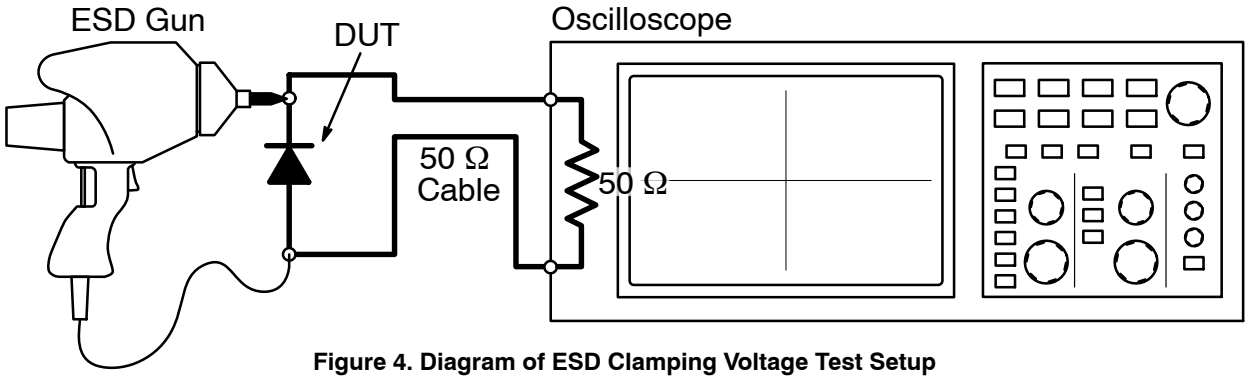

Figure 4. Diagram of ESD Clamping Voltage Test Setup

The following is taken from Application Note AND8307/D − Characterization of ESD Clamping Performance.

ESD Voltage Clamping

For sensitive circuit elements it is important to limit the voltage that an IC will be exposed to during an ESD event to as low a voltage as possible. The ESD clamping voltage is the voltage drop across the ESD protection diode during an ESD event per the IEC61000−4−2 waveform. Since the IEC61000−4−2 was written as a pass/fail spec for larger systems such as cell phones or laptop computers it is not clearly defined in the spec how to specify a clamping voltage at the device level. ON Semiconductor has developed a way to examine the entire voltage waveform across the ESD protection diode over the time domain of an ESD pulse in the form of an oscilloscope screenshot, which can be found on the datasheets for all ESD protection diodes. For more information on how ON Semiconductor creates these screenshots and how to interpret them please refer to AND8307/D.

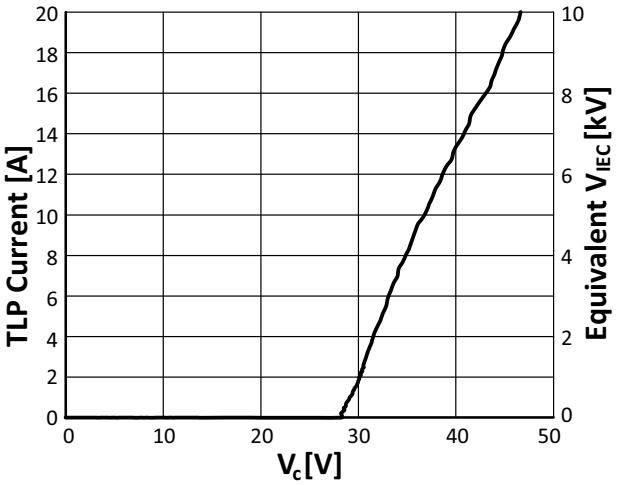

Figure 5. Positive TLP I–V Curve

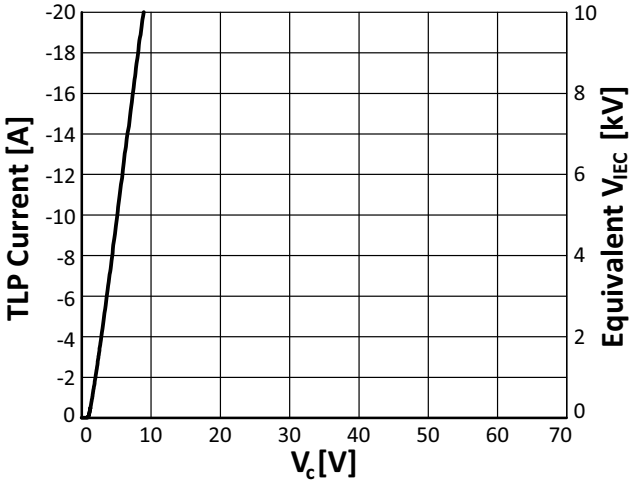

Figure 6. Negative TLP I–V Curve

NOTE: TLP parameter: Z_0 = 50 Ω, t_p = 100 ns, t_r = 1 ns, averaging window: t_1 = 70 ns to t_2 = 90 ns. V_{IEC} is the equivalent voltage stress level of the IEC 61000−4−2 waveform at t = 30 ns with 2 A/kV. See TLP description below for more information.

Transmission Line Pulse (TLP) Measurement

Transmission Line Pulse (TLP) provides current versus voltage (I−V) curves in which each data point is obtained from a 100 ns long rectangular pulse from a charged transmission line. A simplified schematic of a typical TLP system is shown in Figure 7. TLP I−V curves of ESD protection devices accurately demonstrate the product's ESD capability because the 10s of amps current levels and under 100 ns time scale match those of an ESD event. This is illustrated in Figure 8 where an 8 kV IEC 61000−4−2 current waveform is compared with TLP current pulses at 8 A and 16 A. A TLP I−V curve shows the voltage at which the device turns on as well as how well the device clamps voltage over a range of current levels. For more information on TLP measurements and how to interpret them please refer to AND9007/D.

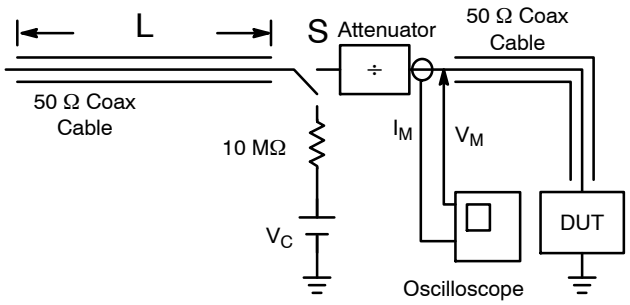

Figure 7. Simplified Schematic of a Typical TLP System

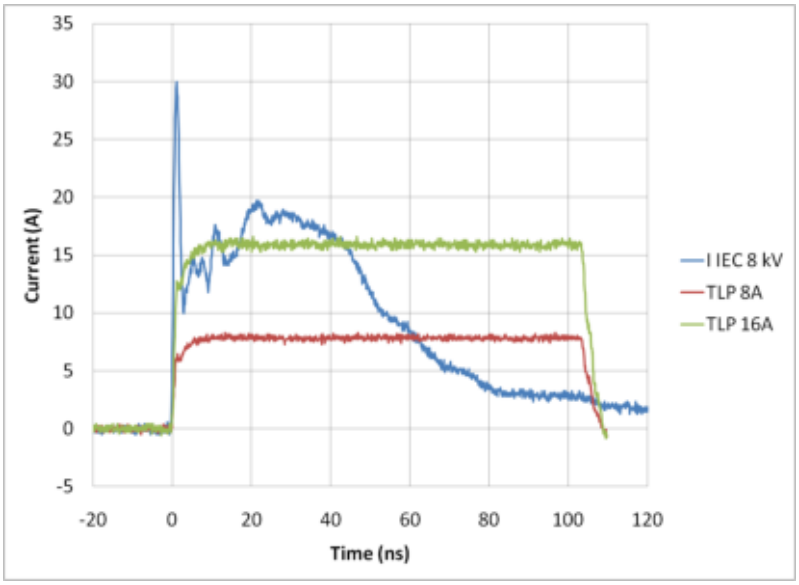

Figure 8. Comparison Between 8 kV IEC 61000−4−2 and 8 A and 16 A TLP Waveforms

TYPICAL MOSFET PERFORMANCE CURVES

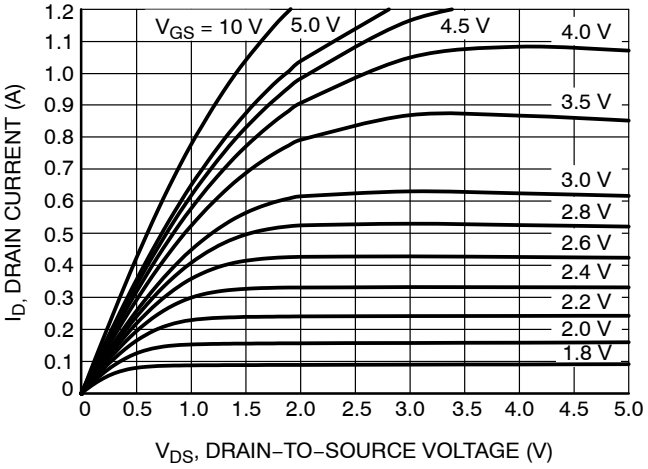

Figure 9. On−Region Characteristics

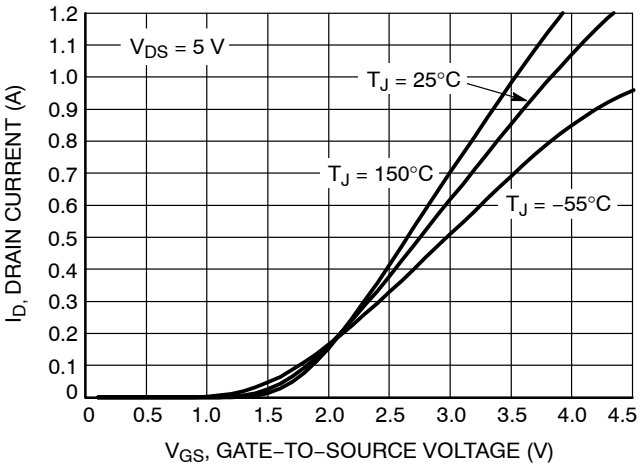

Figure 10. Transfer Characteristics

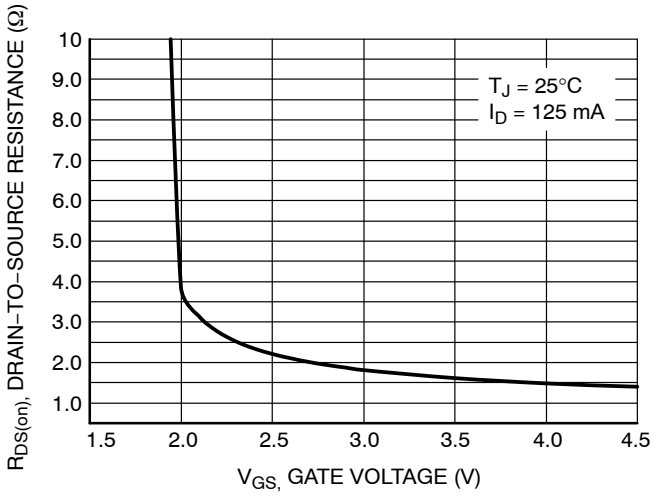

Figure 11. On−Resistance vs. Gate−to−Source Voltage

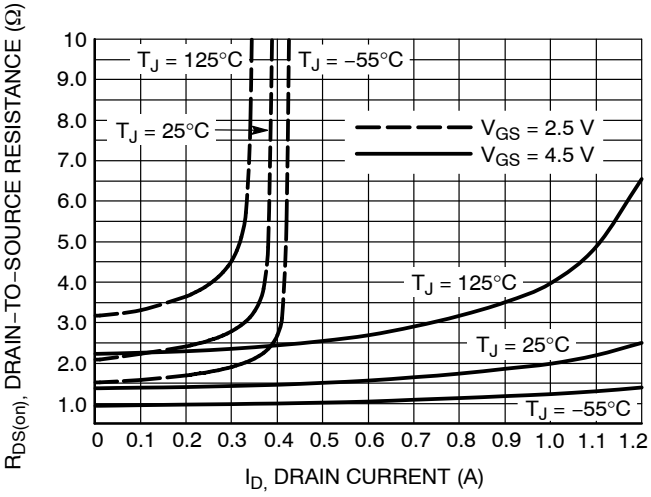

Figure 12. On−Resistance vs. Drain Current and Gate Voltage

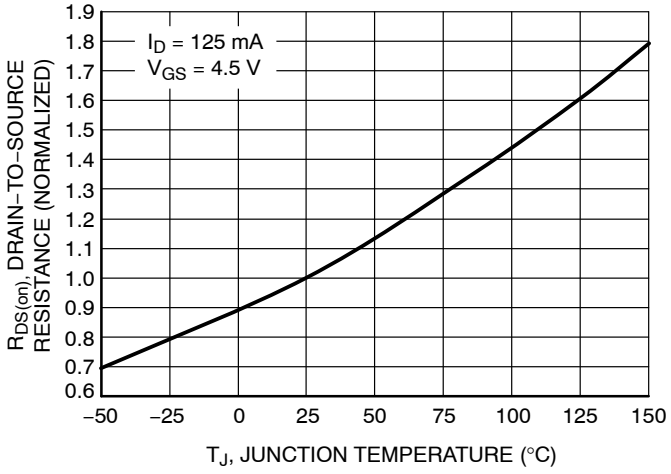

Figure 13. On−Resistance Variation with Temperature

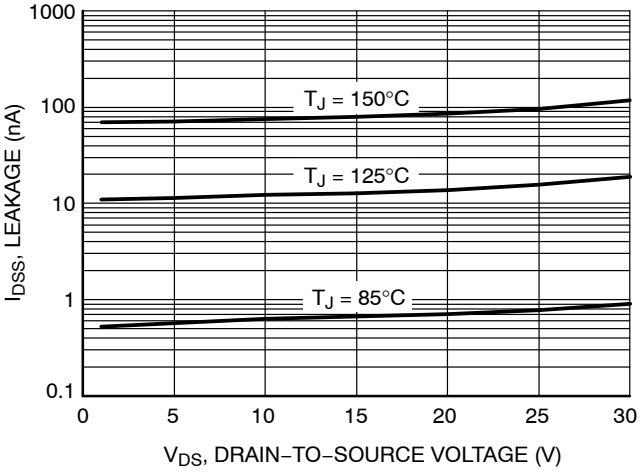

Figure 14. Drain−to−Source Leakage Current vs. Voltage

APPLICATION INFORMATION

Today's connected cars are using multiple high speed signal pair interfaces for various applications such as infotainment, connectivity and ADAS. The electrical hazards likely to be encountered in these automotive high speed signal interfaces include damaging ESD and transient events which occur during manufacturing and assembly, by vehicle occupants or other electrical circuits in the vehicle. The major documents discussing ESD and transient events as far as road vehicles are concerned are ISO 10605 (Road vehicles − Test methods for electrical disturbances from electrostatic discharge) which describes ESD test methods and ISO 7637 (Road vehicles − Electrical disturbances from conduction and coupling) for effects caused by other electronics in the vehicle. IS0 10605 is based on IEC 61000−4−2 Industry Standard, which specifies the various levels of ESD signal characteristics, but also includes additional vehicle−specific requirements. Further, OEM specific test requirements are usually also imposed. In addition, these high speed signal pairs require protection from short−to−battery (which goes up to 16 VDC) and short−to−ground faults.

A suitable protection solution must satisfy well known constraints, such as low capacitive loading of the signal lines to minimize signal attenuation, and also respond quickly to surges and transients with low clamping voltage. In addition, small package sizes help to minimize demand for board−space while providing the ability to route the trace signals with minimal bending to maintain signal integrity.

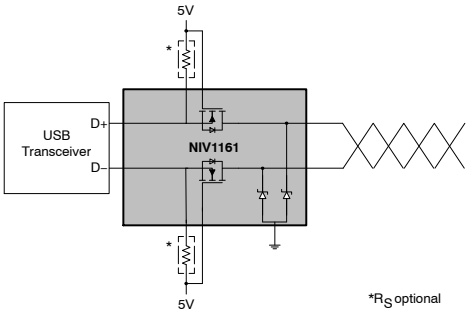

PCB Layout Guidelines

It is optional to route both pins 4 & 6 to their respective belly pads with a top metal trace as both pins are internally connected respectively. Also, steps must be taken for proper placement and signal trace routing of the ESD protection device in order to ensure the maximum ESD survivability and signal integrity for the application. Such steps are listed below.

- Place the ESD protection device as close as possible to the I/O connector to reduce the ESD path to ground and improve the protection performance.
- Make sure to use differential design methodology and impedance matching of all high speed signal traces.
- Use curved traces when possible to avoid unwanted reflections.
- Keep the trace lengths equal between the positive and negative lines of the differential data lanes to avoid common mode noise generation and impedance mismatch.
- Place grounds between high speed pairs and keep as much distance between pairs as possible to reduce crosstalk.

Modes of Operation

There are two distinct modes of operation of the NIV1241: normal (steady state) and short−to−battery event. The below describes each of these in more detail.

Normal Operation (Steady State)

In normal operation, the MOSFETs operate in linear mode, with all source and drain voltages nearly equal, passing the signal levels effectively from the USB transceiver. To ensure successful link communication, the applied gate voltage must be greater than the maximum signal level from the data line plus the maximum threshold voltage of the MOSFET device. Due to the NIV1241's low gate−threshold voltage of 1.5 V, both 3.3 and 5 V gate drives are suitable to provide headroom for most communication protocols.

An optional addition to the application may be a pull−up resistor from the MOSFET source to the gate. A low value resistor (< 5 kΩ) effectively level−shifts the common mode voltage on the individual data lines up to the gate voltage. This action is cancelled out when an appropriate NIV1241 is used on the opposite side of the data line to level−shift the common−mode voltage back down to the levels appropriate for the reader. If a NIV1241 is not used on the opposite side of the data line, the pull−up resistor may either not be populated or populated with a high value resistor (15 kΩ+); differential data signal integrity is maintained.

Short−to−Battery (STB) Event

While the NIV1241 and data channel are off, one pair of MOSFET body diodes passively protects the USB transceiver's ports. While the data channel is on during an event, the NIV1241 actively uses the internal MOSFETs to clamp in a manner akin to level−shifting as the MOSFET operates in the saturation region. The source node will increase to a threshold voltage minus a very small working voltage below the gate potential thus allowing current to flow into the data port, limited by the port impedance until the gate−source voltage comes to rest just above the threshold voltage. In this way, the NIV1241 protects the data port by limiting the termination current as well as clamping the STB voltage itself.

PACKAGE DIMENSIONS

WDFNW6 2.0x2.2, 0.65P
CASE 515AK
ISSUE A

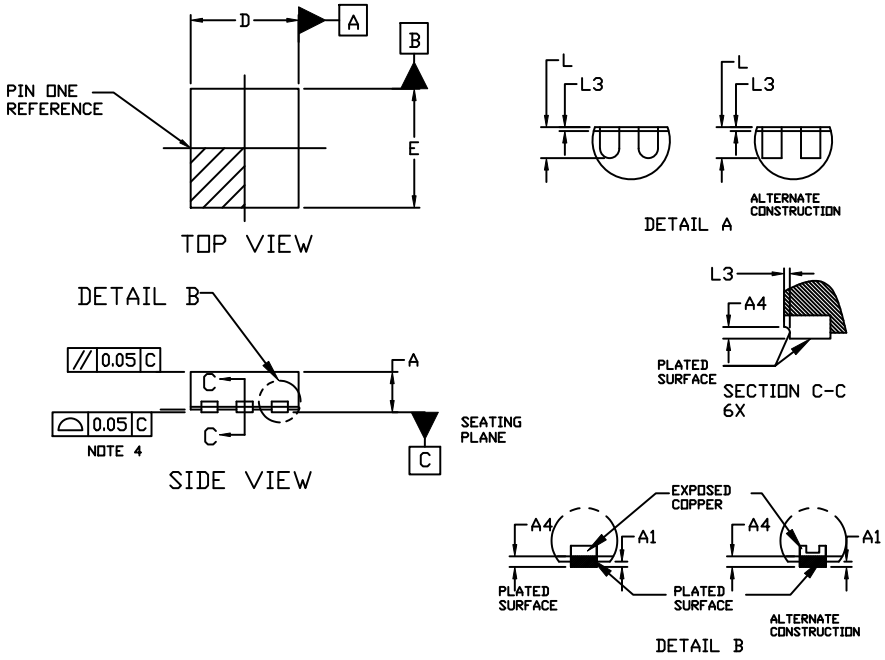

NOTES:

1. DIMENSIONING AND TOLERANCING PER ASME Y14.5M, 2009.
2. CONTROLLING DIMENSION: MILLIMETERS
3. DIMENSION b APPLIES TO PLATED TERMINALS AND IS MEASURED BETWEEN 0.15 AND 0.30MM FROM THE TERMINAL TIP.
4. COPLANARITY APPLIES TO THE EXPOSED PAD AS WELL AS THE TERMINALS.
5. THIS DEVICE CONTAINS WETTABLE FLANK DESIGN FEATURES TO AID IN FILLET FORMATION ON THE LEADS DURING MOUNTING.

	MILLIMETERS		
DIM	MIN.	NOM.	MAX.
A	0.70	0.75	0.80
A1	0.00	---	0.05
A3	0.20 REF		
A4	0.10	---	---
b	0.25	0.30	0.35
D	1.90	2.00	2.10
D2	0.50	0.60	0.70
E	2.10	2.20	2.30
E2	0.50	0.60	0.70
e	0.65 BSC		
F	0.20 REF		
F2	0.52 REF		
K	0.20	---	---
L	0.25	0.30	0.35
L2	0.70	0.80	0.90
L3	---	---	0.09

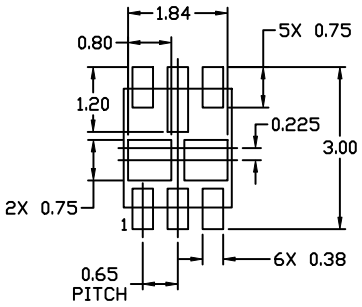

RECOMMENDED MOUNTING FOOTPRINT

* For additional information on our Pb-Free strategy and soldering details, please download the ON Semiconductor Soldering and Mounting Techniques Reference Manual, SOLDERRM/D.

onsemi, ONSEMI , and other names, marks, and brands are registered and/or common law trademarks of Semiconductor Components Industries, LLC dba "**onsemi**" or its affiliates and/or subsidiaries in the United States and/or other countries. **onsemi** owns the rights to a number of patents, trademarks, copyrights, trade secrets, and other intellectual property. A listing of **onsemi's** product/patent coverage may be accessed at www.onsemi.com/site/pdf/Patent−Marking.pdf. **onsemi** reserves the right to make changes at any time to any products or information herein, without notice. The information herein is provided "as−is" and **onsemi** makes no warranty, representation or guarantee regarding the accuracy of the information, product features, availability, functionality, or suitability of its products for any particular purpose, nor does **onsemi** assume any liability arising out of the application or use of any product or circuit, and specifically disclaims any and all liability, including without limitation special, consequential or incidental damages. Buyer is responsible for its products and applications using **onsemi** products, including compliance with all laws, regulations and safety requirements or standards, regardless of any support or applications information provided by **onsemi**. "Typical" parameters which may be provided in **onsemi** data sheets and/or specifications can and do vary in different applications and actual performance may vary over time. All operating parameters, including "Typicals" must be validated for each customer application by customer's technical experts. **onsemi** does not convey any license under any of its intellectual property rights nor the rights of others. **onsemi** products are not designed, intended, or authorized for use as a critical component in life support systems or any FDA Class 3 medical devices or medical devices with a same or similar classification in a foreign jurisdiction or any devices intended for implantation in the human body. Should Buyer purchase or use **onsemi** products for any such unintended or unauthorized application, Buyer shall indemnify and hold **onsemi** and its officers, employees, subsidiaries, affiliates, and distributors harmless against all claims, costs, damages, and expenses, and reasonable attorney fees arising out of, directly or indirectly, any claim of personal injury or death associated with such unintended or unauthorized use, even if such claim alleges that **onsemi** was negligent regarding the design or manufacture of the part. **onsemi** is an Equal Opportunity/Affirmative Action Employer. This literature is subject to all applicable copyright laws and is not for resale in any manner.

PUBLICATION ORDERING INFORMATION

LITERATURE FULFILLMENT:
Email Requests to: orderlit@onsemi.com

onsemi Website: www.onsemi.com

TECHNICAL SUPPORT
North American Technical Support:
Voice Mail: 1 800−282−9855 Toll Free USA/Canada
Phone: 011 421 33 790 2910

Europe, Middle East and Africa Technical Support:
Phone: 00421 33 790 2910
For additional information, please contact your local Sales Representative

◊