ON Semiconductor

Is Now

To learn more about onsemi™, please visit our website at
www.onsemi.com

onsemi and onsemi and other names, marks, and brands are registered and/or common law trademarks of Semiconductor Components Industries, LLC dba "**onsemi**" or its affiliates and/or subsidiaries in the United States and/or other countries. **onsemi** owns the rights to a number of patents, trademarks, copyrights, trade secrets, and other intellectual property. A listing of **onsemi** product/patent coverage may be accessed at www.onsemi.com/site/pdf/Patent-Marking.pdf. **onsemi** reserves the right to make changes at any time to any products or information herein, without notice. The information herein is provided "as-is" and **onsemi** makes no warranty, representation or guarantee regarding the accuracy of the information, product features, availability, functionality, or suitability of its products for any particular purpose, nor does **onsemi** assume any liability arising out of the application or use of any product or circuit, and specifically disclaims any and all liability, including without limitation special, consequential or incidental damages. Buyer is responsible for its products and applications using **onsemi** products, including compliance with all laws, regulations and safety requirements or standards, regardless of any support or applications information provided by **onsemi**. "Typical" parameters which may be provided in **onsemi** data sheets and/or specifications can and do vary in different applications and actual performance may vary over time. All operating parameters, including "Typicals" must be validated for each customer application by customer's technical experts. **onsemi** does not convey any license under any of its intellectual property rights nor the rights of others. **onsemi** products are not designed, intended, or authorized for use as a critical component in life support systems or any FDA Class 3 medical devices or medical devices with a same or similar classification in a foreign jurisdiction or any devices intended for implantation in the human body. Should Buyer purchase or use **onsemi** products for any such unintended or unauthorized application, Buyer shall indemnify and hold **onsemi** and its officers, employees, subsidiaries, affiliates, and distributors harmless against all claims, costs, damages, and expenses, and reasonable attorney fees arising out of, directly or indirectly, any claim of personal injury or death associated with such unintended or unauthorized use, even if such claim alleges that **onsemi** was negligent regarding the design or manufacture of the part. **onsemi** is an Equal Opportunity/Affirmative Action Employer. This literature is subject to all applicable copyright laws and is not for resale in any manner. Other names and brands may be claimed as the property of others.

MOSFET - Power, N-Channel, SUPERFET® III, FAST

650 V, 95 mΩ, 30 A

NTBL095N65S3H

ON Semiconductor®

www.onsemi.com

V_{DSS}	$R_{DS(ON)}$ MAX	I_D MAX
650 V	95 mΩ @ 10 V	30 A

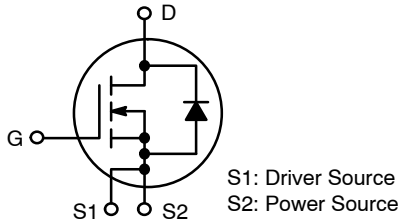

POWER MOSFET

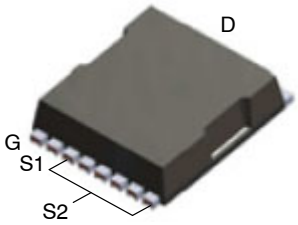

H−PSOF8L
CASE 100DC

Description

SUPERFET III MOSFET is ON Semiconductor's brand−new high voltage super−junction (SJ) MOSFET family that is utilizing charge balance technology for outstanding low on−resistance and lower gate charge performance. This advanced technology is tailored to minimize conduction loss, provides superior switching performance, and withstand extreme dv/dt rate.

Consequently, SUPERFAST III FAST MOSFET series helps minimize various power systems and improve system efficiency. The TOLL package offers improved thermal performance and excellent switching performance thanks to Kelvin Source configuration and lower parasitic source inductance. TOLL offers Moisture Sensitivity Level 1 (MSL 1).

Features

- 700 V @ T_J = 150°C
- Typ. $R_{DS(on)}$ = 77 mΩ
- Ultra Low Gate Charge (Typ. Q_g = 58 nC)
- Low Effective Output Capacitance (Typ. $C_{oss(eff.)}$ = 522 pF)
- 100% Avalanche Tested
- Kelvin Source Configuration and Low Parasitic Source Inductance
- MSL1 Qualified
- These Devices are Pb−Free, Halogen Free/BFR Free and are RoHS Compliant

Applications

- Telecom / Server Power Supplies
- Industrial Power Supplies
- UPS / Solar

MARKING DIAGRAM

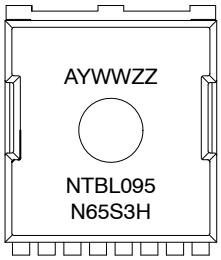

A	= Assembly Location
Y	= Year
WW	= Work Week
ZZ	= Assembly Lot Code
NTBL095N65S3H	= Specific Device Code

ORDERING INFORMATION

See detailed ordering and shipping information on page 2 of this data sheet.

© Semiconductor Components Industries, LLC, 2021

ABSOLUTE MAXIMUM RATINGS (T_C = 25°C, Unless otherwise noted)

Symbol	Parameter		Value	Unit
V_{DSS}	Drain to Source Voltage		650	V
V_{GSS}	Gate to Source Voltage	– DC	±30	V
		– AC (f > 1 Hz)	±30	
I_D	Drain Current	– Continuous (T_C = 25°C)	30	A
		– Continuous (T_C = 100°C)	18	
I_{DM}	Drain Current	– Pulsed (Note 1)	84	A
E_{AS}	Single Pulsed Avalanche Energy (Note 2)		284	mJ
I_{AS}	Avalanche Current (Note 2)		5.5	A
E_{AR}	Repetitive Avalanche Energy (Note 1)		2.08	mJ
dv/dt	MOSFET dv/dt		120	V/ns
	Peak Diode Recovery dv/dt (Note 3)		20	
P_D	Power Dissipation	(T_C = 25°C)	208	W
		– Derate Above 25°C	1.67	W/°C
T_J, T_{STG}	Operating and Storage Temperature Range		–55 to +150	°C
T_L	Maximum Lead Temperature for Soldering, 1/8″ from Case for 5 seconds		260	°C

Stresses exceeding those listed in the Maximum Ratings table may damage the device. If any of these limits are exceeded, device functionality should not be assumed, damage may occur and reliability may be affected.

1. Repetitive rating: pulse width limited by maximum junction temperature.
2. I_{AS} = 5.5 A, R_G = 25 Ω, starting T_J = 25°C.
3. I_{SD} ≤ 15 A, di/dt ≤ 200 A/μs, V_{DD} ≤ 400 V, starting T_J = 25°C.

THERMAL CHARACTERISTICS

Symbol	Parameter	Value	Unit
$R_{\theta JC}$	Thermal Resistance, Junction–to–Case, Steady State	0.41	°C/W
$R_{\theta JA}$	Thermal Resistance, Junction–to–Ambient, Steady State (Note 4)	43	

4. Device on 1 in^2, 2 oz copper pad on 1.5 x 1.5 in. board of FR–4 material.

PACKAGE MARKING AND ORDERING INFORMATION

Device	Device Marking	Package	Reel Size	Tape Width	Quantity
NTBL095N65S3H	NTBL095N65S3H	H–PSOF8L	13 mm	24 mm	2000 Units

†For information on tape and reel specifications, including part orientation and tape sizes, please refer to our Tape and Reel Packaging Specifications Brochure, BRD8011/D.

ELECTRICAL CHARACTERISTICS (T_C = 25°C unless otherwise noted)

Symbol	Parameter	Test Conditions	Min.	Typ.	Max.	Unit
OFF CHARACTERISTICS						
BV_{DSS}	Drain to Source Breakdown Voltage	V_{GS} = 0 V, I_D = 1 mA, T_J = 25°C	650	–	–	V
		V_{GS} = 0 V, I_D = 1 mA, T_J = 150°C	700	–	–	V
$\Delta BV_{DSS} / \Delta T_J$	Breakdown Voltage Temperature Coefficient	I_D = 10 mA, Referenced to 25°C	–	0.63	–	V/°C
I_{DSS}	Zero Gate Voltage Drain Current	V_{DS} = 650 V, V_{GS} = 0 V	–	–	1	μA
		V_{DS} = 520 V, T_C = 125°C	–	1.8	–	
I_{GSS}	Gate to Body Leakage Current	V_{GS} = ±30 V, V_{DS} = 0 V	–	–	±100	nA
ON CHARACTERISTICS						
$V_{GS(th)}$	Gate Threshold Voltage	V_{GS} = V_{DS}, I_D = 2.8 mA	2.4	–	4.0	V
$R_{DS(on)}$	Static Drain to Source On Resistance	V_{GS} = 10 V, I_D = 15 A	–	77	95	mΩ
g_{FS}	Forward Transconductance	V_{DS} = 20 V, I_D = 15 A	–	30	–	S
DYNAMIC CHARACTERISTICS						
C_{iss}	Input Capacitance	V_{DS} = 400 V, V_{GS} = 0 V, f = 250 kHz	–	2833	–	pF
C_{oss}	Output Capacitance		–	43	–	pF
$C_{oss(eff.)}$	Effective Output Capacitance	V_{DS} = 0 V to 400 V, V_{GS} = 0 V	–	522	–	pF
$C_{oss(er.)}$	Energy Related Output Capacitance	V_{DS} = 0 V to 400 V, V_{GS} = 0 V	–	75	–	pF
$Q_{g(tot)}$	Total Gate Charge at 10 V	V_{DS} = 400 V, I_D = 15 A, V_{GS} = 10 V (Note 5)	–	58	–	nC
Q_{gs}	Gate to Source Gate Charge		–	14	–	nC
Q_{gd}	Gate to Drain “Miller” Charge		–	15	–	nC
ESR	Equivalent Series Resistance	f = 1 MHz	–	1.2	–	Ω
SWITCHING CHARACTERISTICS						
$t_{d(on)}$	Turn-On Delay Time	V_{DD} = 400 V, I_D = 15 A, V_{GS} = 10 V, R_g = 4.7 Ω (Note 5)	–	23	–	ns
t_r	Turn-On Rise Time		–	6.5	–	ns
$t_{d(off)}$	Turn-Off Delay Time		–	69	–	ns
t_f	Turn-Off Fall Time		–	2.5	–	ns
SOURCE-DRAIN DIODE CHARACTERISTICS						
I_S	Maximum Continuous Source to Drain Diode Forward Current		–	–	30	A
I_{SM}	Maximum Pulsed Source to Drain Diode Forward Current		–	–	84	A
V_{SD}	Source to Drain Diode Forward Voltage	V_{GS} = 0 V, I_{SD} = 15 A	–	–	1.2	V
t_{rr}	Reverse Recovery Time	V_{DD} = 400 V, I_{SD} = 15 A, dI_F/dt = 100 A/μs	–	352	–	ns
Q_{rr}	Reverse Recovery Charge		–	5.8	–	μC

Product parametric performance is indicated in the Electrical Characteristics for the listed test conditions, unless otherwise noted. Product performance may not be indicated by the Electrical Characteristics if operated under different conditions.

5. Essentially independent of operating temperature typical characteristics.

TYPICAL CHARACTERISTICS (T_C = 25°C unless otherwise noted)

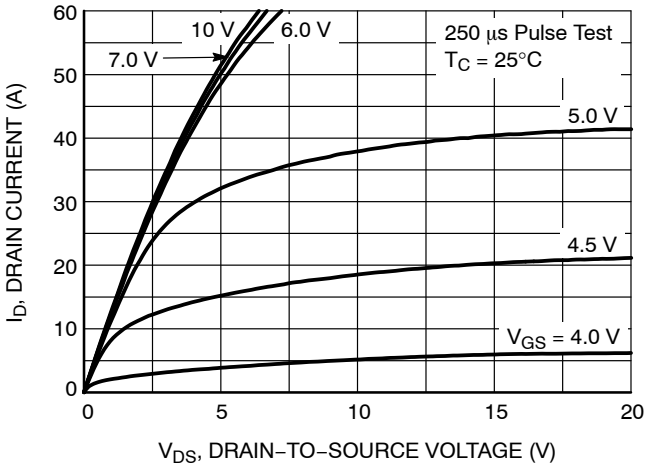

Figure 1. On−Region Characteristics

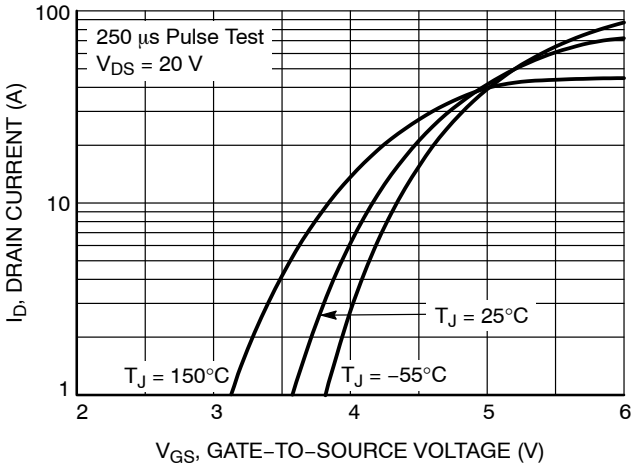

Figure 2. Transfer Characteristics

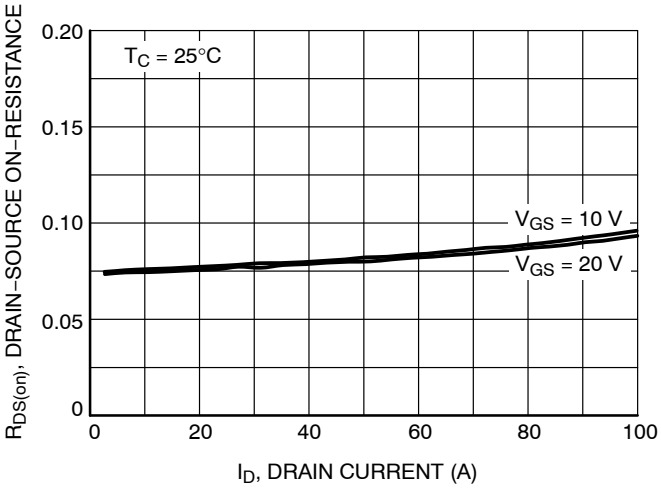

Figure 3. On−Resistance Variation vs. Drain Current and Gate Voltage

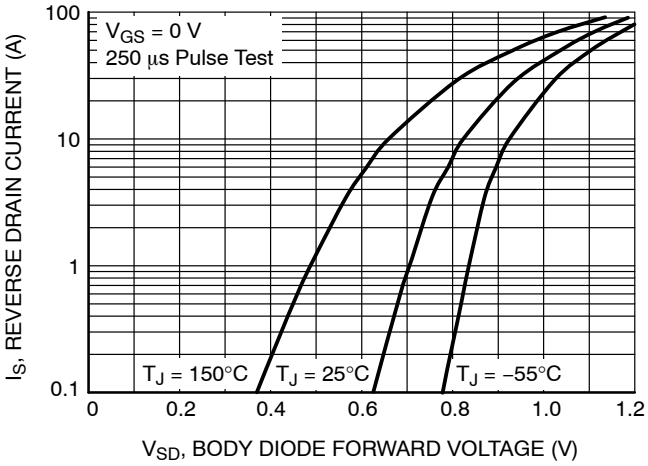

Figure 4. Body Diode Forward Voltage Variation vs. Source Current and Temperature

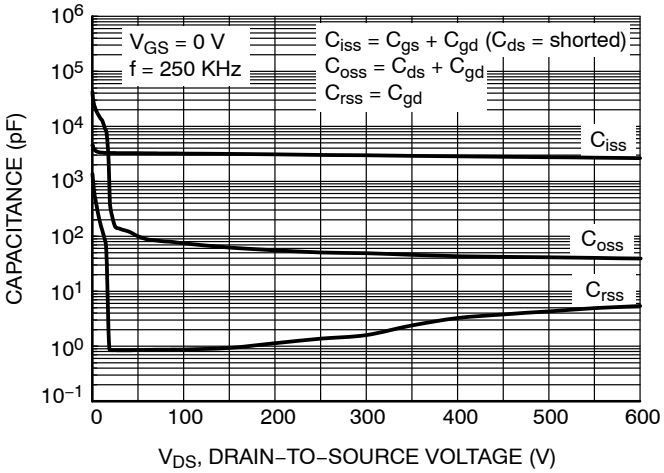

Figure 5. Capacitance Characteristics

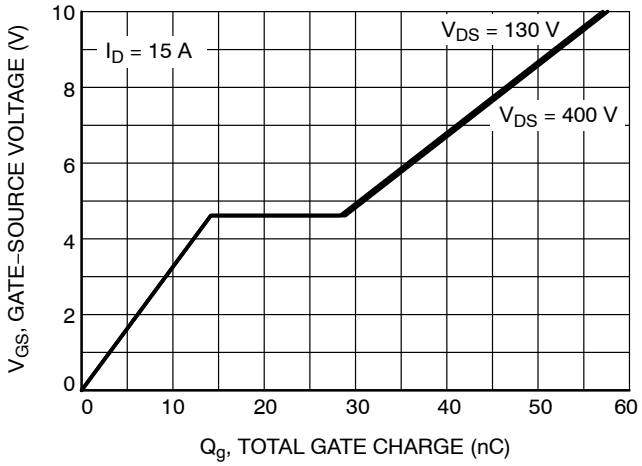

Figure 6. Gate Charge Characteristics

TYPICAL CHARACTERISTICS (T_C = 25°C unless otherwise noted)

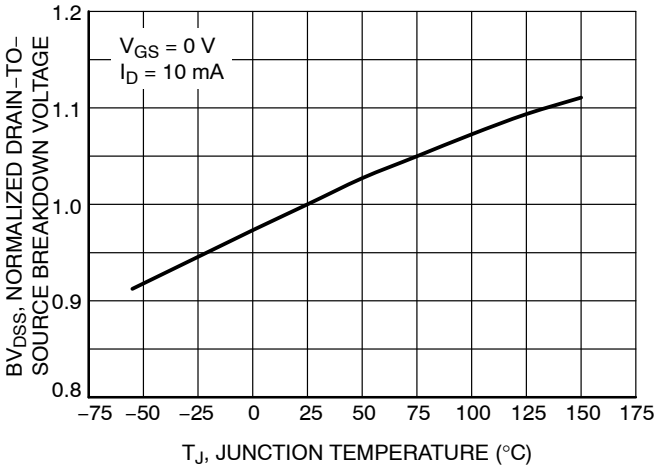

Figure 7. Breakdown Voltage Variation vs. Temperature

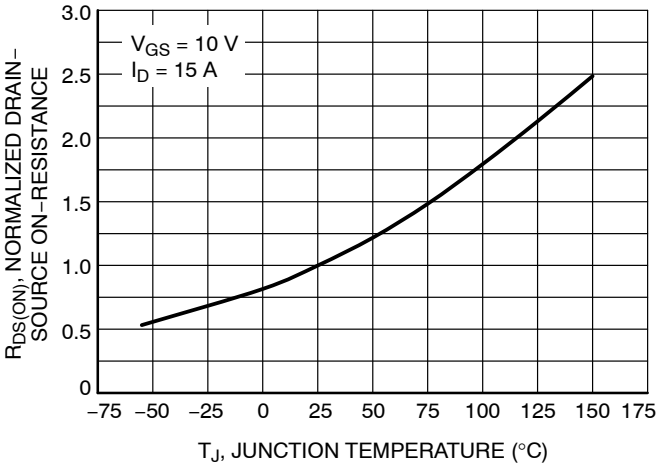

Figure 8. On−Resistance Variation vs. Temperature

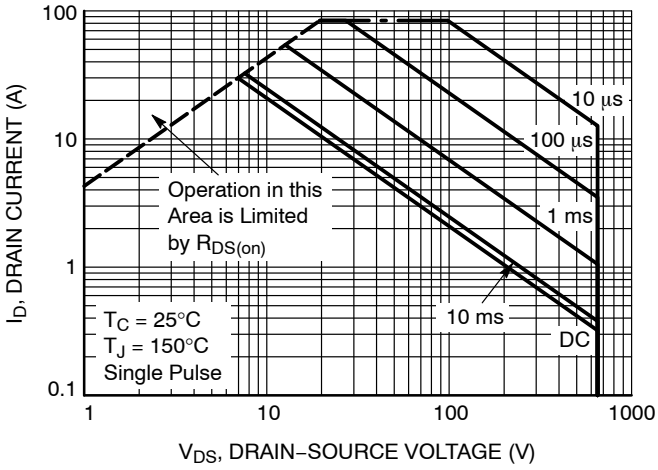

Figure 9. Maximum Safe Operating Area

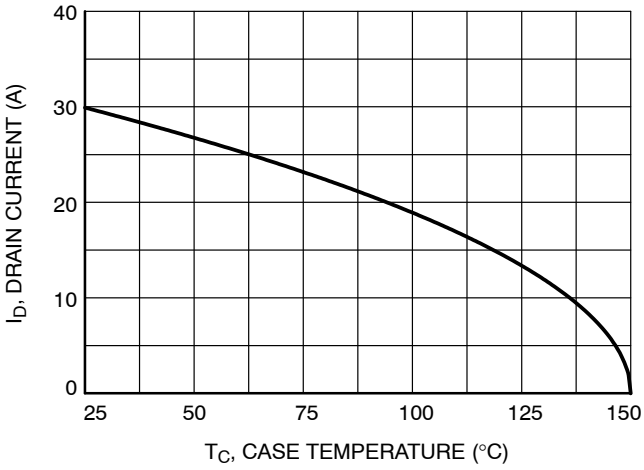

Figure 10. Maximum Drain Current vs. Case Temperature

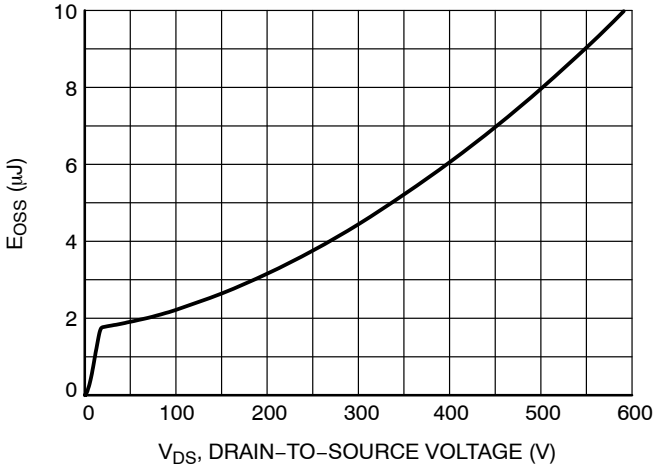

Figure 11. E_{OSS} vs. Drain to Source Voltage

TYPICAL CHARACTERISTICS (T_C = 25°C unless otherwise noted)

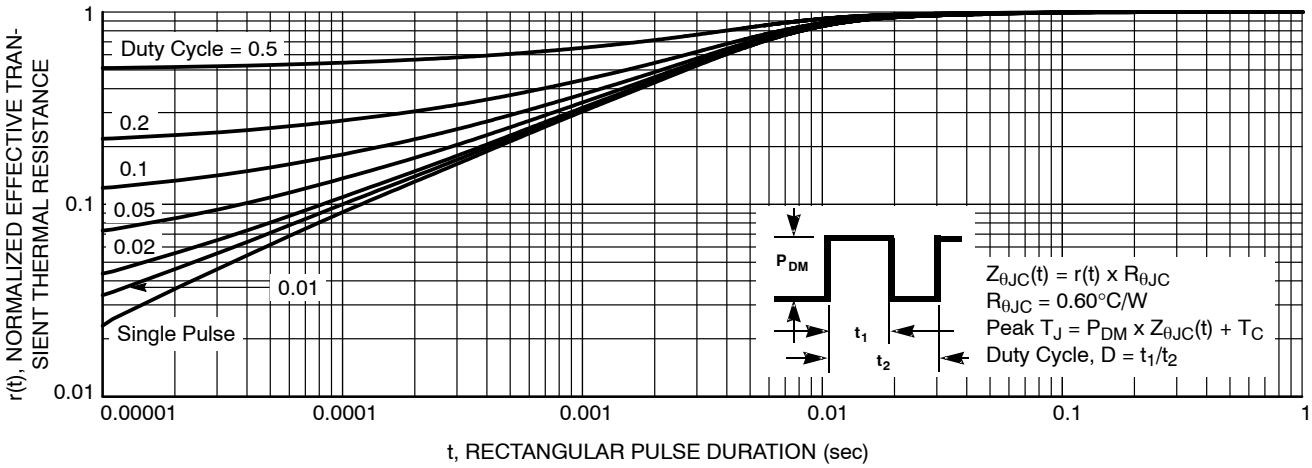

Figure 12. Transient Thermal Impedance

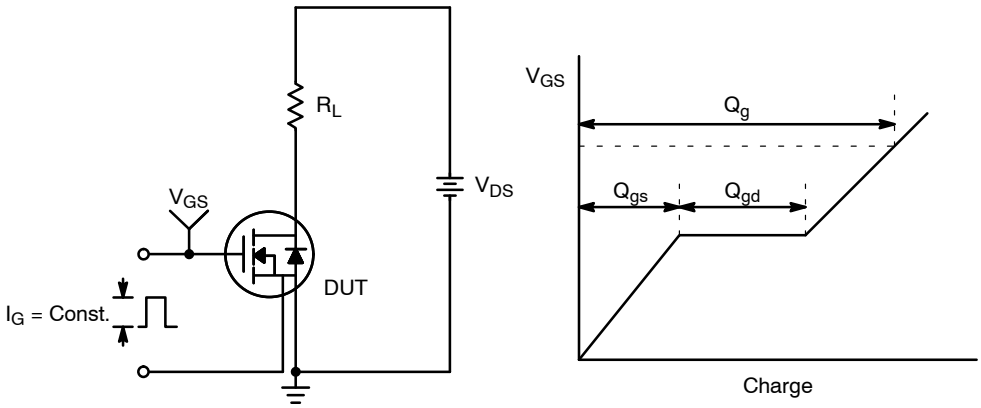

Figure 13. Gate Charge Test Circuit & Waveform

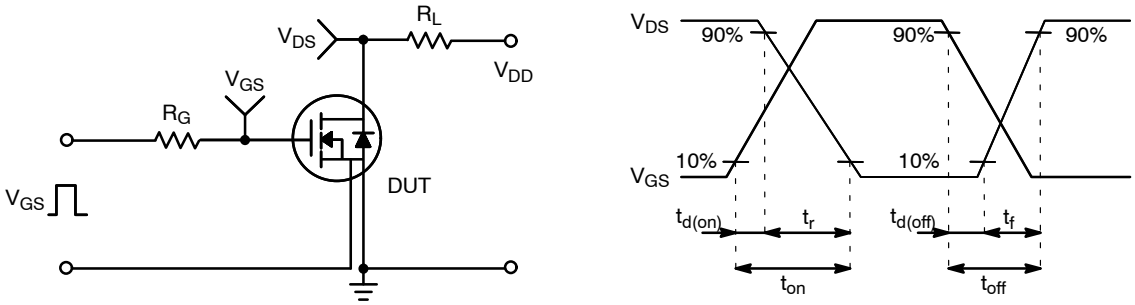

Figure 14. Resistive Switching Test Circuit & Waveforms

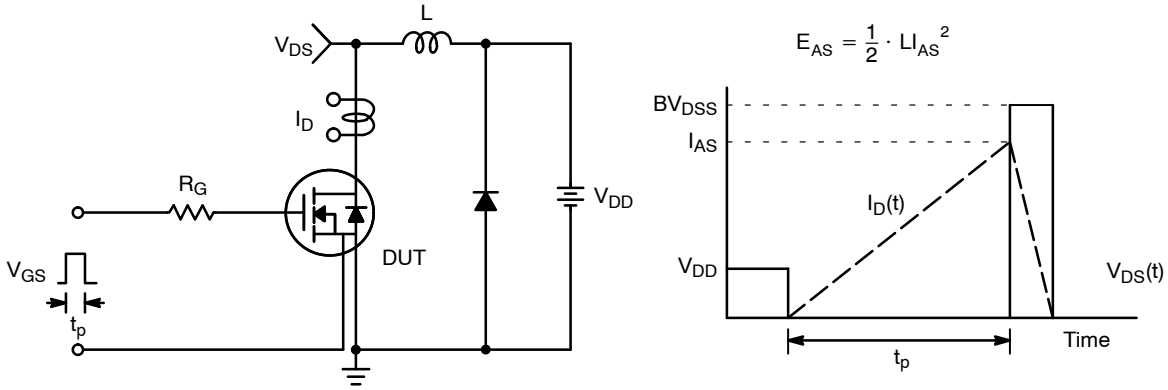

Figure 15. Unclamped Inductive Switching Test Circuit & Waveforms

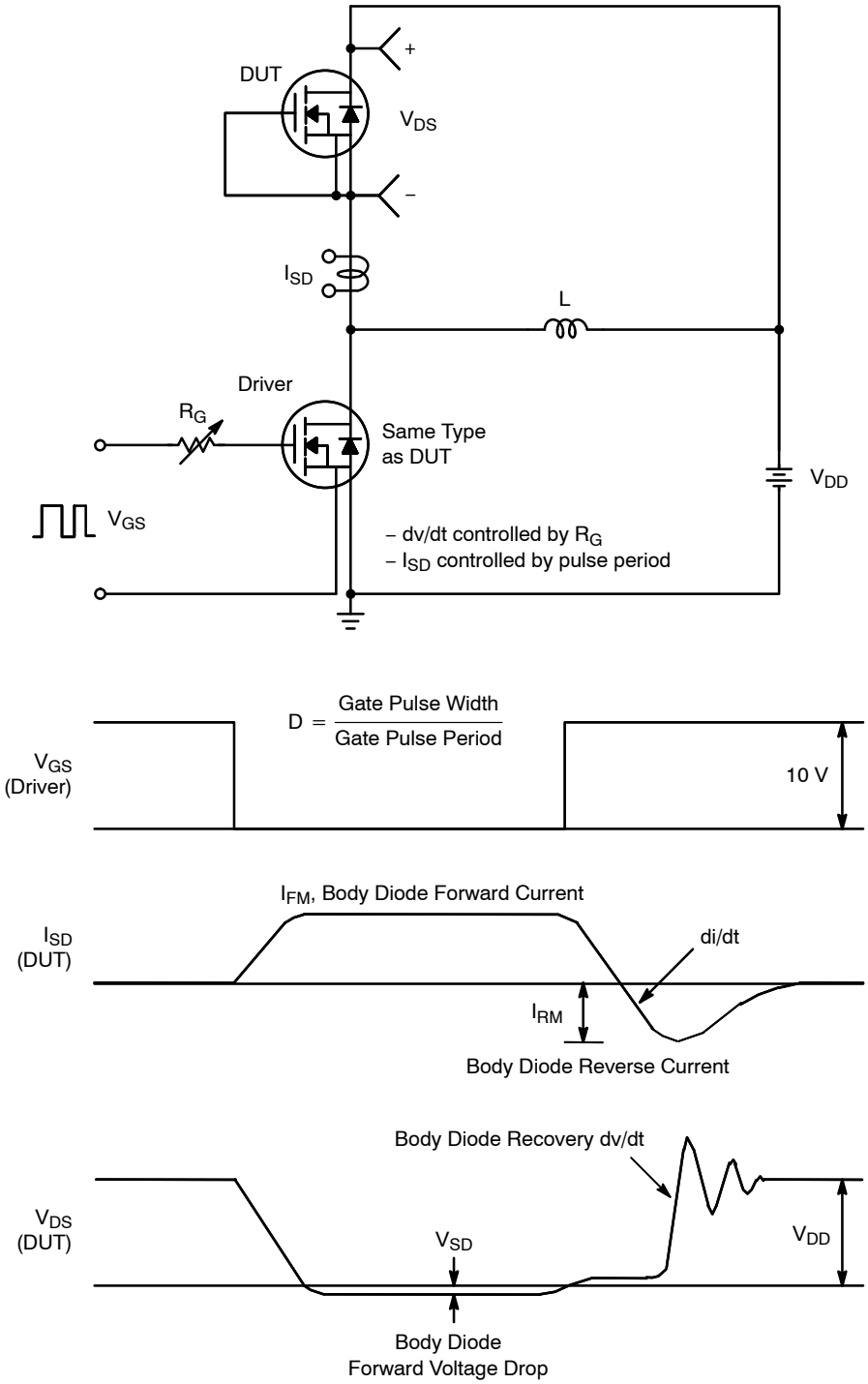

Figure 16. Peak Diode Recovery dv/dt Test Circuit & Waveforms

SUPERFET and FRFET are a registered trademarks of Semiconductor Components Industries, LLC (SCILLC) or its subsidiaries in the United States and/or other countries.

PACKAGE DIMENSIONS

H−PSOF8L 9.90x11.68, 1.20P
CASE 100DC
ISSUE O

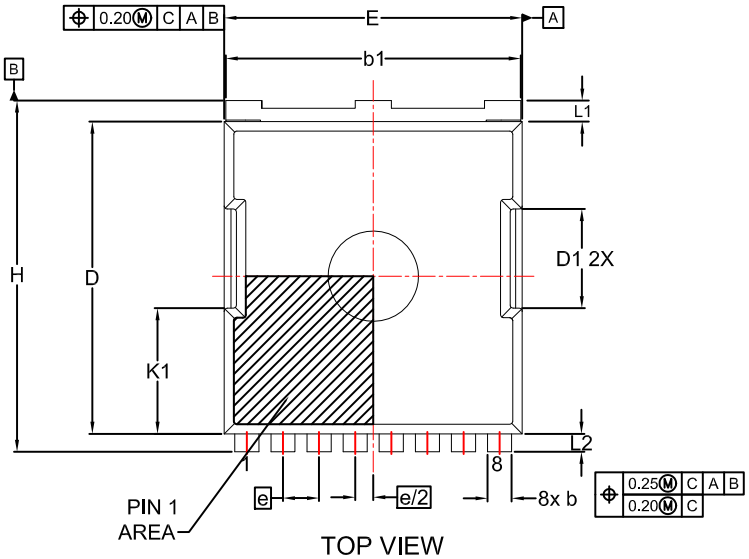

TOP VIEW

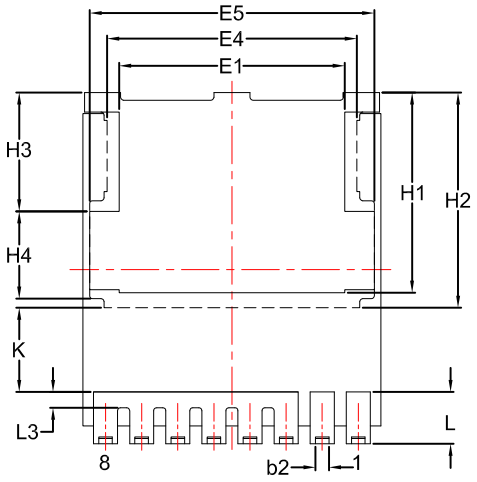

BOTTOM VIEW

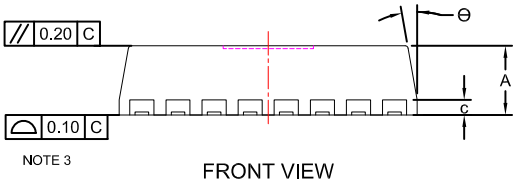

FRONT VIEW

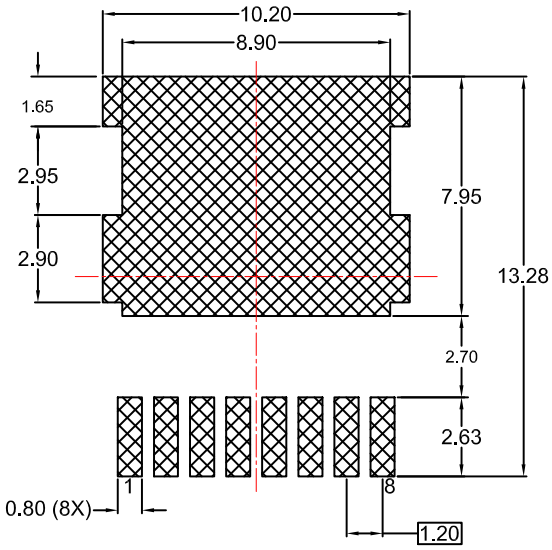

RECOMMENDED LAND PATTERN

NOTES:

1. DIMENSIONING AND TOLERANCING PER ASME Y14.5M, 2009.
2. CONTROLLING DIMENSION: MILLIMETERS
3. COPLANARITY APPLIES TO THE EXPOSED PADS AS WELL AS THE TERMINALS.
4. DIMENSIONS D1 AND E1 DO NOT INCLUDE MOLD FLASH, PROTRUSIONS, OR GATE BURRS.

DIM	MILLIMETERS		
	MIN.	NOM.	MAX.
A	2.20	2.30	2.40
b	0.70	0.80	0.90
b1	9.70	9.80	9.90
b2	0.36	0.46	0.56
c	0.40	0.50	0.60
D	10.28	10.38	10.48
D1	3.30		
E	9.80	9.90	10.80
E1	7.40	7.50	7.60
E4	8.30		
E5	9.49		
e	1.20 BSC		
e/2	0.60 BSC		
H	11.58	11.68	11.78
H1	6.55	6.65	6.75
H2	7.05	7.15	7.25
H3	3.60		
H4	3.26		
K	2.70	2.80	2.90
K1	4.18		
L	1.63	1.73	1.83
L1	0.60	0.70	0.80
L2	0.50	0.60	0.70
L3	1.10	1.20	1.30
Θ	10° REF.		

ON Semiconductor and ON are trademarks of Semiconductor Components Industries, LLC dba ON Semiconductor or its subsidiaries in the United States and/or other countries. ON Semiconductor owns the rights to a number of patents, trademarks, copyrights, trade secrets, and other intellectual property. A listing of ON Semiconductor's product/patent coverage may be accessed at www.onsemi.com/site/pdf/Patent−Marking.pdf. ON Semiconductor reserves the right to make changes without further notice to any products herein. ON Semiconductor makes no warranty, representation or guarantee regarding the suitability of its products for any particular purpose, nor does ON Semiconductor assume any liability arising out of the application or use of any product or circuit, and specifically disclaims any and all liability, including without limitation special, consequential or incidental damages. Buyer is responsible for its products and applications using ON Semiconductor products, including compliance with all laws, regulations and safety requirements or standards, regardless of any support or applications information provided by ON Semiconductor. "Typical" parameters which may be provided in ON Semiconductor data sheets and/or specifications can and do vary in different applications and actual performance may vary over time. All operating parameters, including "Typicals" must be validated for each customer application by customer's technical experts. ON Semiconductor does not convey any license under its patent rights nor the rights of others. ON Semiconductor products are not designed, intended, or authorized for use as a critical component in life support systems or any FDA Class 3 medical devices or medical devices with a same or similar classification in a foreign jurisdiction or any devices intended for implantation in the human body. Should Buyer purchase or use ON Semiconductor products for any such unintended or unauthorized application, Buyer shall indemnify and hold ON Semiconductor and its officers, employees, subsidiaries, affiliates, and distributors harmless against all claims, costs, damages, and expenses, and reasonable attorney fees arising out of, directly or indirectly, any claim of personal injury or death associated with such unintended or unauthorized use, even if such claim alleges that ON Semiconductor was negligent regarding the design or manufacture of the part. ON Semiconductor is an Equal Opportunity/Affirmative Action Employer. This literature is subject to all applicable copyright laws and is not for resale in any manner.

PUBLICATION ORDERING INFORMATION

LITERATURE FULFILLMENT:
Email Requests to: orderlit@onsemi.com

ON Semiconductor Website: www.onsemi.com

TECHNICAL SUPPORT
North American Technical Support:
Voice Mail: 1 800−282−9855 Toll Free USA/Canada
Phone: 011 421 33 790 2910

Europe, Middle East and Africa Technical Support:
Phone: 00421 33 790 2910
For additional information, please contact your local Sales Representative

◊