PCA9306 Dual Bidirectional I²C Bus and SMBus Voltage-Level Translator

1 Features

- 2-Bit bidirectional translator for SDA and SCL lines in mixed-mode I²C Applications
- I²C and SMBus compatible
- Less than 1.5-ns maximum propagation delay to accommodate standard-mode and fast-mode I²C devices and multiple controllers
- Allows voltage-level translation between
  - 1.2-V V_{REF1} and 1.8-V, 2.5-V, 3.3-V, or 5-V V_{REF2}
  - 1.8-V V_{REF1} and 2.5-V, 3.3-V, or 5-V V_{REF2}
  - 2.5-V V_{REF1} and 3.3-V or 5-V V_{REF2}
  - 3.3-V V_{REF1} and 5-V V_{REF2}
- Provides bidirectional voltage translation with no direction pin
- Low 3.5-Ω ON-state resistance between input and output ports provides less signal distortion
- Open-drain I²C I/O ports (SCL1, SDA1, SCL2, and SDA2)
- 5-V Tolerant I²C I/O ports to support mixed-mode signal operation
- High-impedance SCL1, SDA1, SCL2, and SDA2 pins for EN = low
- Lockup-free operation for isolation when EN = low
- Flow-through pinout for ease of printed-circuit-board trace routing
- Latch-up performance exceeds 100 mA Per JESD 78, class II
- ESD protection exceeds JESD 22
  - 2000-V Human-body model (A114-A)
  - 1000-V Charged-device model (C101)

2 Applications

- I²C, SMBus, PMBus, MDIO, UART, low-speed SDIO, GPIO, and other two-signal interfaces
- Servers
- Routers (telecom switching equipment)
- Personal Computers
- Industrial Automation

3 Description

The PCA9306 device is a dual bidirectional I²C and SMBus voltage-level translator with an enable (EN) input, and is operational from 1.2-V to 3.3-V V_{REF1} and 1.8-V to 5.5-V V_{REF2}.

The PCA9306 device allows bidirectional voltage translations between 1.2 V and 5 V, without the use of a direction pin. The low ON-state resistance (R_{ON}) of the switch allows connections to be made with minimal propagation delay. When EN is high, the translator switch is ON, and the SCL1 and SDA1 I/O are connected to the SCL2 and SDA2 I/O, respectively, allowing bidirectional data flow between ports. When EN is low, the translator switch is off, and a high-impedance state exists between ports.

In addition to voltage translation, the PCA9306 device can be used to isolate a 400-kHz bus from a 100-kHz bus by controlling the EN pin to disconnect the slower bus during fast-mode communication.

Package Information

PART NUMBER	PACKAGE(1)	PACKAGE SIZE(2)
PCA9306	SSOP (8)	2.95 mm x 4 mm
	VSSOP (8)	2.3 mm x 3.1 mm
	X2SON (8)	1.4 mm x 1 mm
	DSBGA (8)	1.98 mm x 0.98 mm

(1) For all available packages, see the orderable addendum at the end of the datasheet.
(2) The package size (length × width) is a nominal value and includes pins, where applicable.

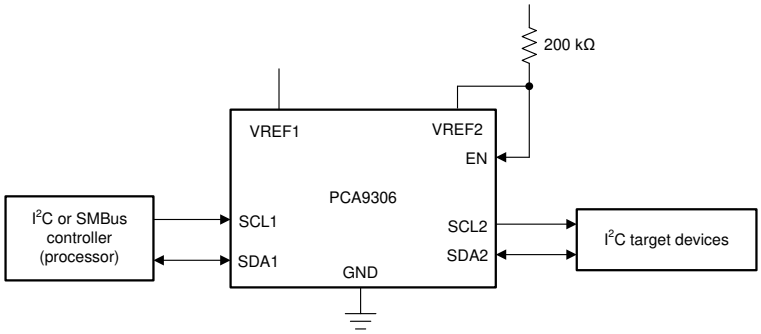

Simplified Application Diagram

An IMPORTANT NOTICE at the end of this data sheet addresses availability, warranty, changes, use in safety-critical applications, intellectual property matters and other important disclaimers. PRODUCTION DATA.

Table of Contents

1 Features....1
2 Applications....1
3 Description....1
4 Revision History....2
5 Pin Configuration and Functions....4
6 Specifications....5
6.1 Absolute Maximum Ratings....5
6.2 ESD Ratings....5
6.3 Recommended Operating Conditions....5
6.4 Thermal Information....6
6.5 Electrical Characteristics....6
6.6 Switching Characteristics AC Performance (Translating Down) (EN = 3.3 V)....7
6.7 Switching Characteristics AC Performance (Translating Down) (EN = 2.5 V)....7
6.8 Switching Characteristics AC Performance (Translating Up) (EN = 3.3 V)....7
6.9 Switching Characteristics AC Performance (Translating Up) (EN = 2.5 V)....7
6.10 Typical Characteristics....8
7 Parameter Measurement Information....9
8 Detailed Description....10
8.1 Overview....10
8.2 Functional Block Diagram....16
8.3 Feature Description....16
8.4 Device Functional Modes....16
9 Application and Implementation....17
9.1 Application Information....17
9.2 Typical Application....17
10 Power Supply Recommendations....21
11 Layout....22
11.1 Layout Guidelines....22
11.2 Layout Example....22
12 Device and Documentation Support....23
12.1 Receiving Notification of Documentation Updates....23
12.2 Support Resources....23
12.3 Trademarks....23
12.4 Electrostatic Discharge Caution....23
12.5 Glossary....23

4 Revision History

NOTE: Page numbers for previous revisions may differ from page numbers in the current version.

Changes from Revision N (October 2021) to Revision O (September 2023) — **Page**

- Changed Device Information table to the *Package Information* table 1
- Changed the *Thermal Information* table values for the DQE package.... 6

Changes from Revision M (April 2019) to Revision N (October 2021) — **Page**

- Globally changed instances of legacy terminology to controller and target where I2C is mentioned....1
- Changed the *Thermal Information* table values for the DCT and DCU packages....6
- Changed the MIN and MAX values of V_{IK} in the *Electrical Characteristics* table.... 6
- Changed t_{PHL} to show the package values in the *Switching Characteristics AC Performance (Translating Down) (EN = 3.3 V)* table....7
- Changed t_{PHL} to show the package values in the *Switching Characteristics AC Performance (Translating Down) (EN = 2.5 V)* table....7
- Changed t_{PHL} to show the package values in the *Switching Characteristics AC Performance (Translating Up) (EN = 3.3 V)* table....7
- Changed t_{PHL} to show the package values in the *Switching Characteristics AC Performance (Translating Up) (EN = 2.5 V)* table....7

Changes from Revision L (April 2016) to Revision M (April 2019) — **Page**

- Changed the DQE package family From: VSSON to X2SON....4
- Added new section to *Overview* 10
- Changed the labels in Figure 9-4. The red curve is > 2 V, the black curve is ≤ 2 V. 20

Changes from Revision K (October 2014) to Revision L (April 2016) — **Page**

- Changed "ON-State Connection " to "ON-state Resistance"....1
- Deleted machine model ESD rating 1
- Added "bus" following "100-kHz" in the last sentence of the *Description* section.... 1
- Changed body-size dimensions in the *Device Information* table 1
- Replaced pinout diagrams....4
- Added I/O column to the *Pin Functions* table 4

Copyright © 2023 Texas Instruments Incorporated

- Deleted RVH package from *Pin Configuration and Functions* section 4
- Moved T_{stg} from *Handling Ratings* to *Absolute Maximum Ratings* 5
- Added a note following the *Electrical Characteristics* table..... 6
- Added Figure 7-1 to the *Parameter Measurement Information* section..... 9
- Changed Figure 7-2 9
- Changed "repeater" to "level shifter" in second paragraph of the *Overview* section 10
- Deleted the last row of the Design Requirements table. 18
- Corrected equation from f_{knee}= 0.5 / RT (10%–80%) to f_{knee}= 0.5 / RT (10%–90%)..... 19

Changes from Revision J (October 2010) to Revision K (December 2012) **Page**

- Added *Pin Configuration and Functions* section, *Handling Rating* table, *Feature Description* section, *Device Functional Modes*, *Application and Implementation* section, *Power Supply Recommendations* section, *Layout* section, *Device and Documentation Support* section, and *Mechanical, Packaging, and Orderable Information* section 1

5 Pin Configuration and Functions

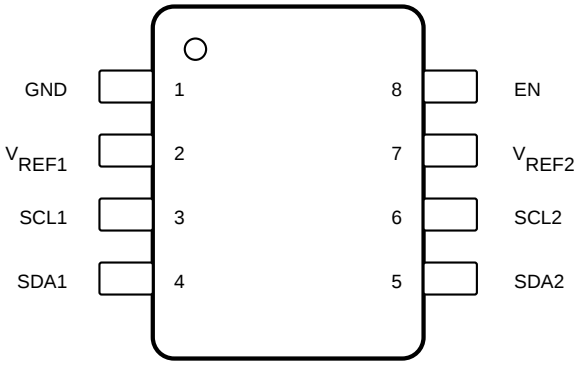

Figure 5-1. DCT Package 8-Pin SSOP (Top View)

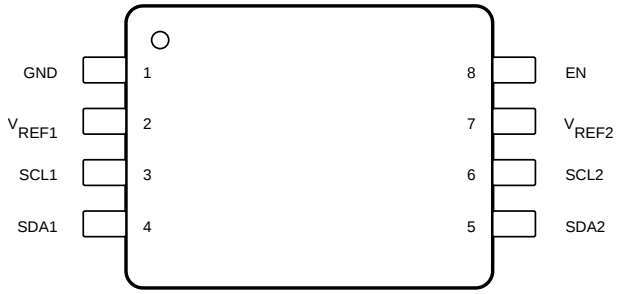

Figure 5-2. DCU Package 8-Pin VSSOP (Top View)

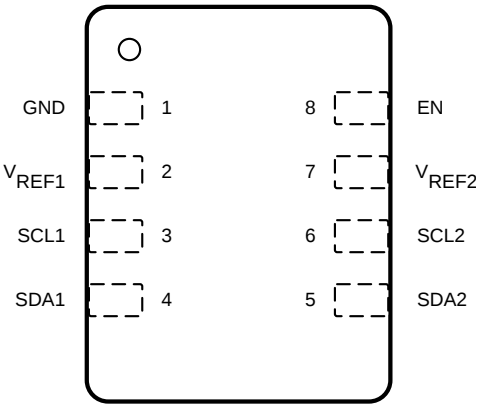

Figure 5-3. DQE Package 8-Pin X2SON (Top View)

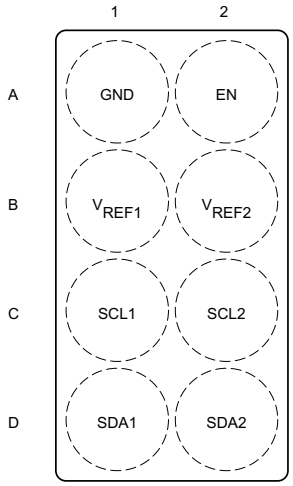

Figure 5-4. YZT Package 8-Pin DSBGA (Top View)

Table 5-1. Pin Functions

PIN			I/O	DESCRIPTION
NAME	NO.			
	DCT, DCU, DQE	YZT		
EN	8	A2	I	Switch enable input
GND	1	A1	—	Ground, 0 V
SCL1	3	C1	I/O	Serial clock, low-voltage side
SCL2	6	C2	I/O	Serial clock, high-voltage side
SDA1	4	D1	I/O	Serial data, low-voltage side
SDA2	5	D2	I/O	Serial data, high-voltage side
V_{REF1}	2	B1	I	Low-voltage-side reference supply voltage for SCL1 and SDA1
V_{REF2}	7	B2	I	High-voltage-side reference supply voltage for SCL2 and SDA2

Copyright © 2023 Texas Instruments Incorporated

6 Specifications

6.1 Absolute Maximum Ratings

over operating ambient temperature range (unless otherwise noted) see [1]

			MIN	MAX	UNIT
V_{REF1}	DC reference voltage range		–0.5	7	V
V_{REF2}	DC reference bias voltage range		–0.5	7	V
V_I	Input voltage range[2]		–0.5	7	V
$V_{I/O}$	Input/output voltage range[2]		–0.5	7	V
	Continuous channel current			128	mA
I_{IK}	Input clamp current	$V_I < 0$		–50	mA
$T_{j(max)}$	Maximum junction temperature			125	°C
T_{stg}	Storage temperature range		–65	150	°C

(1) Operation outside the *Absolute Maximum Ratings* may cause permanent device damage. Absolute maximum ratings do not imply functional operation of the device at these or any other conditions beyond those listed under *Recommended Operating Conditions*. If briefly operating outside the *Recommended Operating Conditions* but within the *Absolute Maximum Ratings*, the device may not sustain damage, but it may not be fully functional. Operating the device in this manner may affect device reliability, functionality, performance, and shorten the device lifetime.
(2) The input and input/output negative voltage ratings may be exceeded if the input and output current ratings are observed.

6.2 ESD Ratings

			VALUE	UNIT
$V_{(ESD)}$	Electrostatic discharge	Human body model (HBM), per ANSI/ESDA/JEDEC JS-001, all pins[1]	±2000	V
		Charged device model (CDM), per ANSI/ESDA/JEDEC JS-0011, all pins[2]	±1000	

(1) JEDEC document JEP155 states that 500-V HBM allows safe manufacturing with a standard ESD control process.
(2) JEDEC document JEP157 states that 250-V CDM allows safe manufacturing with a standard ESD control process.

6.3 Recommended Operating Conditions

			MIN	MAX	UNIT
$V_{I/O}$	Input/output voltage	SCL1, SDA1, SCL2, SDA2	0	5.5	V
V_{REF1} [1]	Reference voltage		0	5.5	V
V_{REF2} [1]	Reference voltage		0	5.5	V
EN	Enable input voltage		0	5.5	V
I_{PASS}	Pass switch current			64	mA
T_A	Operating ambient temperature		–40	85	°C

(1) To support translation, V_{REF1} supports 1.2 V to V_{REF2} - 0.6 V. V_{REF2} must be between V_{REF1} + 0.6 V to 5.5 V. See Section 9.2 for more information.

Copyright © 2023 Texas Instruments Incorporated

6.4 Thermal Information

THERMAL METRIC[1]		PCA9306				UNIT
		DCT	DCU	DQE	YZT	
		8 PINS	8 PINS	8 PINS	8 PINS	
$R_{\theta JA}$	Junction-to-ambient thermal resistance	254.1	275.5	299.3	125.5	°C/W
$R_{\theta JC(top)}$	Junction-to-case (top) thermal resistance	148.6	127.1	166.9	1	°C/W
$R_{\theta JB}$	Junction-to-board thermal resistance	168.8	186.9	188.30	62.7	°C/W
ψ_{JT}	Junction-to-top characterization parameter	70.1	65.7	18.0	3.4	°C/W
ψ_{JB}	Junction-to-board characterization parameter	167.4	185.9	187.4	62.7	°C/W

(1) For more information about traditional and new thermal metrics, see the *Semiconductor and IC Package Thermal Metrics* application report.

6.5 Electrical Characteristics

over recommended operating ambient temperature range (unless otherwise noted)

PARAMETER			TEST CONDITIONS			MIN	TYP[1]	MAX	UNIT
V_{IK}	Input clamp voltage		I_I = –18 mA,	EN = 0 V		-1.2		0	V
I_{IH}	Input leakage current		V_I = 5 V,	EN = 0 V				5	µA
$C_{i\ (EN)}$	Input capacitance		V_I = 3 V or 0				11		pF
$C_{io(off)}$	Off capacitance	SCLn, SDAn	V_O = 3 V or 0,	EN = 0 V			4	6	pF
$C_{io(on)}$	On capacitance	SCLn, SDAn	V_O = 3 V or 0,	EN = 3 V			10.5	12.5	pF
R_{ON} [2]	On-state resistance	SCLn, SDAn	V_I = 0	I_O = 64 mA	EN = 4.5 V		3.5	5.5	Ω
					EN = 3 V		4.7	7	
					EN = 2.3 V		6.3	9.5	
			V_I = 0	I_O = 15 mA	EN = 1.5 V		25.5	32	
			V_I = 2.4 V[3]	I_O = 15 mA	EN = 4.5 V	1	6	15	
					EN = 3 V	20	60	140	
			V_I = 1.7 V[3]	I_O = 15 mA	EN = 2.3 V	20	60	140	

(1) All typical values are at T_A = 25°C.
(2) Measured by the voltage drop between the SCL1 and SCL2, or SDA1 and SDA2 terminals, at the indicated current through the switch. Minimum ON-state resistance is determined by the lowest voltage of the two terminals.
(3) Measured in current sink configuration only (See Figure 7-1)

Copyright © 2023 Texas Instruments Incorporated

6.6 Switching Characteristics AC Performance (Translating Down) (EN = 3.3 V)

over recommended operating ambient temperature range, EN = 3.3 V, V_{IH} = 3.3 V, V_{IL} = 0, V_M = 1.15 V (unless otherwise noted) (see Figure 7-1).

PARAMETER[(1)]	FROM (INPUT)	TO (OUTPUT)	Package	C_L = 50 pF		C_L = 30 pF		C_L = 15 pF		UNIT
				MIN	MAX	MIN	MAX	MIN	MAX	
t_{PLH}	SCL2 or SDA2	SCL1 or SDA1		0	0.8	0	0.6	0	0.3	ns
t_{PHL}			YZT, DQE	0	1.2	0	1	0	0.5	
			DCU, DCT						0.75	

(1) Translating down: the high-voltage side driving toward the low-voltage side

6.7 Switching Characteristics AC Performance (Translating Down) (EN = 2.5 V)

over recommended operating ambient temperature range, EN = 2.5 V, V_{IH} = 3.3 V, V_{IL} = 0, V_M = 0.75 V (unless otherwise noted) (see Figure 7-1).

PARAMETER[(1)]	FROM (INPUT)	TO (OUTPUT)	Package	C_L = 50 pF		C_L = 30 pF		C_L = 15 pF		UNIT
				MIN	MAX	MIN	MAX	MIN	MAX	
t_{PLH}	SCL2 or SDA2	SCL1 or SDA1		0	1	0	0.7	0	0.4	ns
t_{PHL}			YZT, DQE	0	1.3	0	1	0	0.6	
			DCT, DCU						0.75	

(1) Translating down: the high-voltage side driving toward the low-voltage side

6.8 Switching Characteristics AC Performance (Translating Up) (EN = 3.3 V)

over recommended operating ambient temperature range, EN = 3.3 V, V_{IH} = 2.3 V, V_{IL} = 0, V_T = 3.3 V, V_M = 1.15 V, R_L = 300 Ω (unless otherwise noted) (see Figure 7-1).

PARAMETER[(1)]	FROM (INPUT)	TO (OUTPUT)	Packages	C_L = 50 pF		C_L = 30 pF		C_L = 15 pF		UNIT
				MIN	MAX	MIN	MAX	MIN	MAX	
t_{PLH}	SCL1 or SDA1	SCL2 or SDA2		0	0.9	0	0.6	0	0.4	ns
t_{PHL}			YZT, DQE	0	1.4	0	1.1	0	0.7	
			DCU, DCT		1.7		1.4		1.0	

(1) Translating up: the low-voltage side driving toward the high-voltage side

6.9 Switching Characteristics AC Performance (Translating Up) (EN = 2.5 V)

over recommended operating ambient temperature range, EN = 2.5 V, V_{IH} = 2.3 V, V_{IL} = 0, V_T = 3.3 V, V_M = 0.75 V, R_L = 300 Ω (unless otherwise noted) (see Figure 7-1).

PARAMETER[(1)]	FROM (INPUT)	TO (OUTPUT)	Packages	C_L = 50 pF		C_L = 30 pF		C_L = 15 pF		UNIT
				MIN	MAX	MIN	MAX	MIN	MAX	
t_{PLH}	SCL1 or SDA1	SCL2 or SDA2		0	1	0	0.6	0	0.4	ns
t_{PHL}			YZT, DQE	0	1.3	0	1.3	0	0.8	
			DCT, DCU		2.1		1.7		1.3	

(1) Translating up: the low-voltage side driving toward the high-voltage side

Copyright © 2023 Texas Instruments Incorporated

6.10 Typical Characteristics

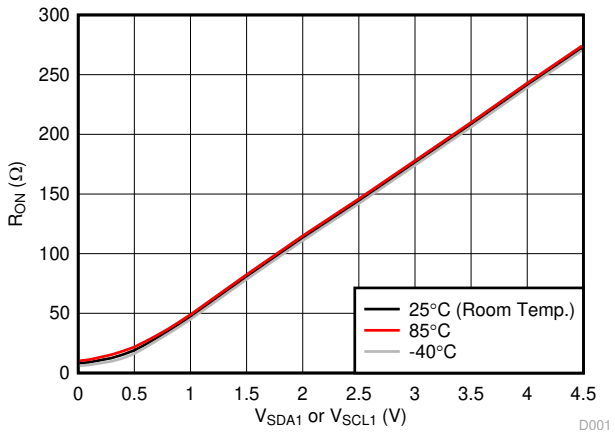

V_{EN} = 1.5 V I_I = 15 mA

Figure 6-1. On-Resistance (R_{ON}) vs Input Voltage (V_{SDA1} or V_{SCL1})

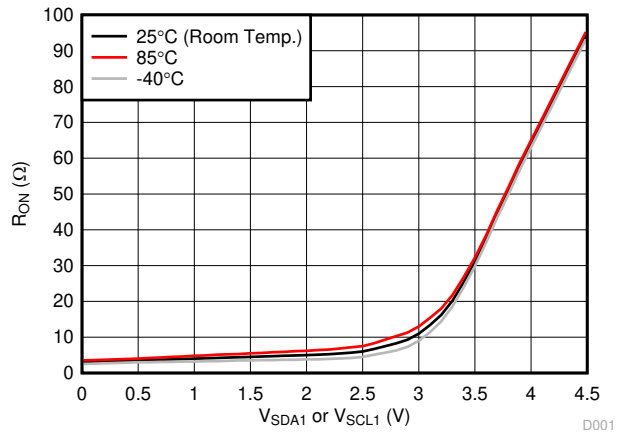

V_{EN} = 4.5 V I_I = 15 mA

Figure 6-2. On-Resistance (R_{ON}) vs Input Voltage (V_{SDA1} or V_{SCL1})

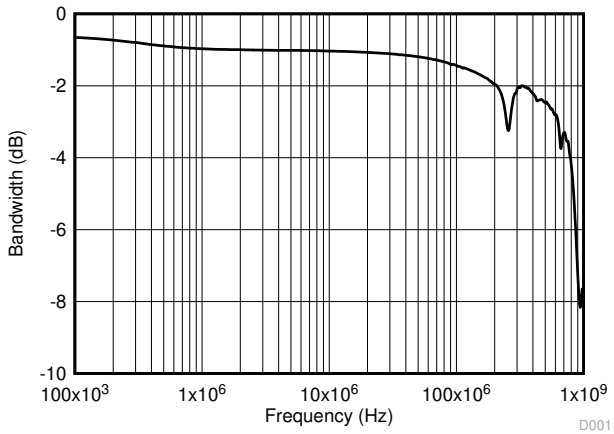

V_{EN} = 2.5 V V_{BIAS} = GND

Figure 6-3. Typical Bandwidth of PCA9306

Copyright © 2023 Texas Instruments Incorporated

7 Parameter Measurement Information

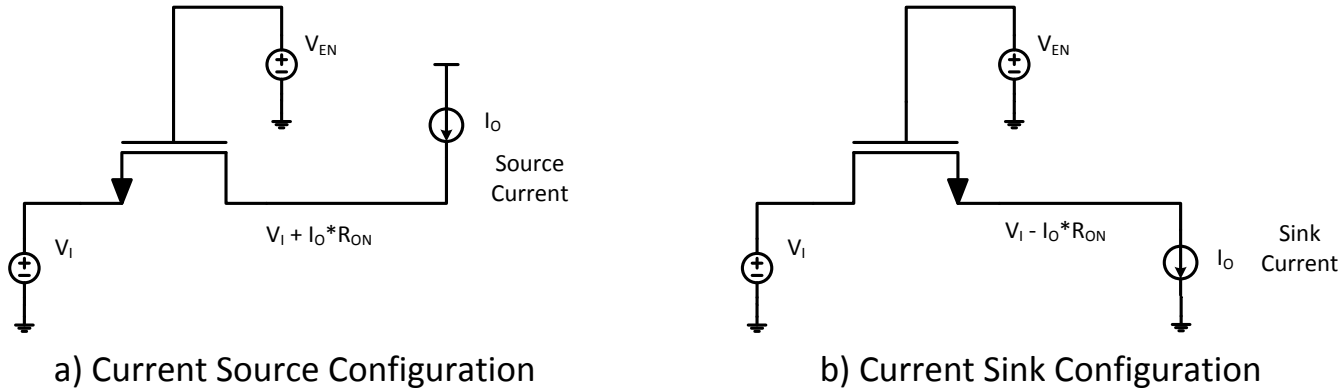

Figure 7-1. Current Source and Current Sink Configurations for R_{ON} Measurements

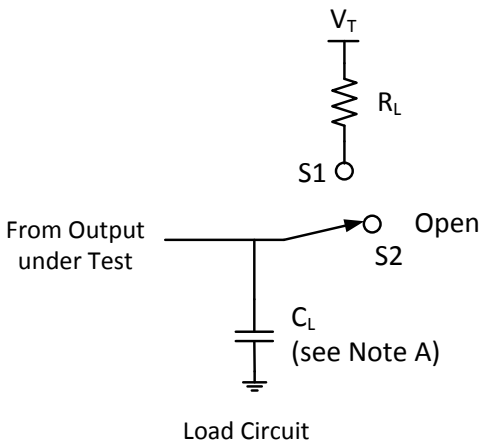

USAGE	SWITCH
Translating up	S1
Translating down	S2

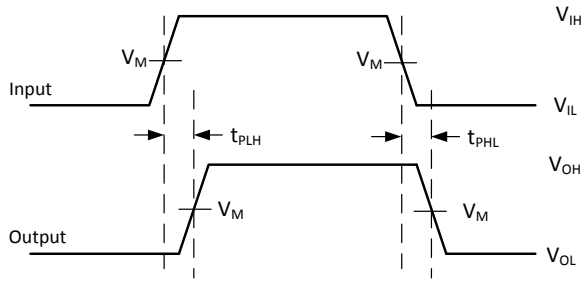

NOTES: A. C_L includes probe and jig capacitance
B. All input pulses are supplied by generators having the following characteristics: PRR ≤ 10 MHz, Z_O = 50 Ω , t_r ≤ 2 ns, t_f ≤ 2 ns.
C. The outputs are measured one at a time, with one transition per measurement.

Figure 7-2. Load Circuit for Outputs

8 Detailed Description

8.1 Overview

The PCA9306 device is a dual bidirectional I^2C and SMBus voltage-level translator with an enable (EN) input and operates without use of a direction pin. The voltage supply range for V_{REF1} is 1.2 V to 3.3 V and the supply range for V_{REF2} is 1.8 V to 5.5 V.

The PCA9306 device can also be used to run two buses, one at 400-kHz operating frequency and the other at 100-kHz operating frequency. If the two buses are operating at different frequencies, the 100-kHz bus must be disconnected by using the EN pin when the 400-kHz operation of the main bus is required. If the controller is running at 400 kHz, the maximum system operating frequency may be less than 400 kHz because of the delays added by the level shifter.

In I^2C applications, the bus capacitance limit of 400 pF restricts the number of devices and bus length. The capacitive load on both sides of the PCA9306 device must be taken into account when approximating the total load of the system, ensuring the sum of both sides is under 400 pF.

Both the SDA and SCL channels of the PCA9306 device have the same electrical characteristics, and there is minimal deviation from one output to another in voltage or propagation delay. This is a benefit over discrete-transistor voltage-translation solutions, because the fabrication of the switch is symmetrical. The translator provides excellent ESD protection to lower-voltage devices and at the same time protects less-ESD-resistant devices.

8.1.1 Definition of threshold voltage

This document references a threshold voltage denoted as V_{th}, which appears multiple times throughout this document when discussing the NFET between V_{REF1} and V_{REF2}. The value of V_{th} is approximately 0.6 V at room temperature.

8.1.2 Correct Device Set Up

In a normal set up shown in Figure 8-1, the enable pin and V_{REF2} are shorted together and tied to a 200-kΩ resistor, and a reference voltage equal to V_{REF1} plus the FET threshold voltage is established. This reference voltage is used to help pass lows from one side to another more effectively while still separating the different pull up voltages on both sides.

Copyright © 2023 Texas Instruments Incorporated

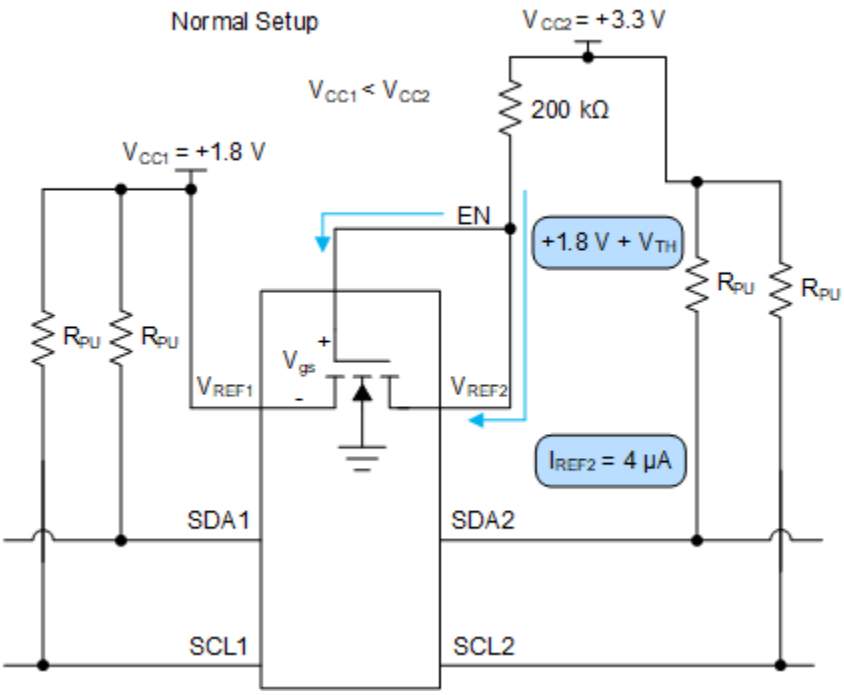

Figure 8-1. Normal Setup

Care should be taken to make sure V_{REF2} has an external resistor tied between it and V_{CC2}. If V_{REF2} is tied directly to the V_{CC2} rail without a resistor, then there is no external resistance from the V_{CC2} to V_{CC1} to limit the current such as in Figure 8-2. This effectively looks like a low impedance path for current to travel through and potentially break the pass FET if the current flowing through the pass FET is larger than the absolute maximum continuous channel current specified in section 6.1. The continuous channel current is larger with a higher voltage difference between V_{CC1} and V_{CC2}.

Figure 8-2 shows an improper set up. If V_{CC2} is larger than V_{CC1} but less than V_{th}, the impedance between V_{CC1} and V_{CC2} is high resulting in a low drain to source current, which does not cause damage to the device. Concern arises when V_{CC2} becomes larger than V_{CC1} by V_{th}. During this event, the NFET turns on and begin to conduct current. This current is dependent on the gate to source voltage and drain to source voltage.

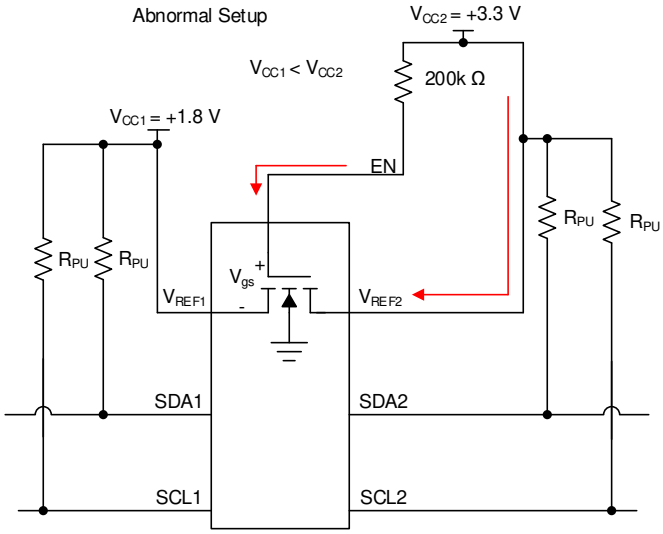

Figure 8-2. Abnormal Setup

8.1.3 Disconnecting an I2C target from the Main I2C Bus Using the EN Pin

PCA9306 can be used as a switch to disconnect one side of the device from the main I2C bus. This can be advantageous in multiple situations. One instance of this situation is if there are devices on the I2C bus which only supports fast mode (400 kHz) while other devices on the bus support fast mode plus (1 MHz). An example of this is displayed in Figure 8-3.

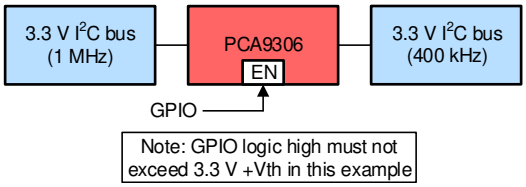

Figure 8-3. Example of an I2C bus with multiple supported frequencies

In this situation, if the controller is on the 1 MHz side then communicating at 1 MHz should not be attempted if PCA9306 were enabled. It needs to be disabled for PCA9306 to avoid possibly glitching state machines in devices which were designed to operate correctly at 400 kHz or slower. When PCA9306 is disabled, the controller can communicate with the 1 MHz devices without disturbing the 400 kHz bus. When the PCA9306 is enabled, communication across both sides at 400 kHz is acceptable.

8.1.4 Supporting Remote Board Insertion to Backplane with PCA9306

Another situation where PCA9306 is advantageous when using its enable feature is when a remote board with I2C lines needs to be attached to a main board (backplane) with an I2C bus such as in Figure 8-4. If connecting a remote board to a backplane is not done properly, the connection could result in data corruption during a transaction or the insertion could generate an unintended pulse on the SCL line. Which could glitch an I2C device state machine causing the I2C bus to get stuck.

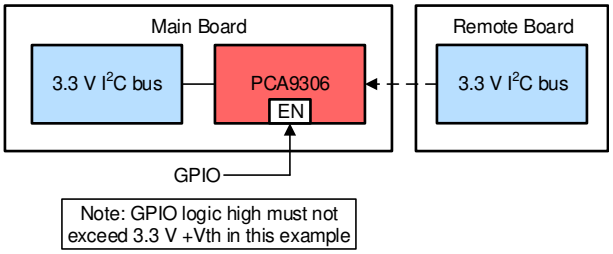

Figure 8-4. An example of connecting a remote board to a main board (backplane)

PCA9306 can be used to support this application because it can be disabled while making the connection. Then it is enabled once the remote board is powered on and the buses on both sides are IDLE.

8.1.5 Switch Configuration

PCA9306 has the capability of being used with its V_{REF1} voltage equal to V_{REF2}. This essentially turns the device from a translator to a device which can be used as a switch, and in some situations this can be useful. The switch configuration is shown in Figure 8-5 and translation mode is shown in Figure 8-6.

Copyright © 2023 Texas Instruments Incorporated

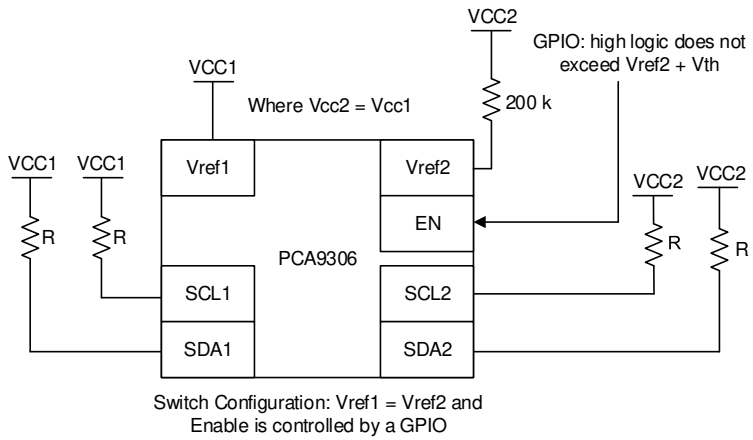

Figure 8-5. Switch Configuration

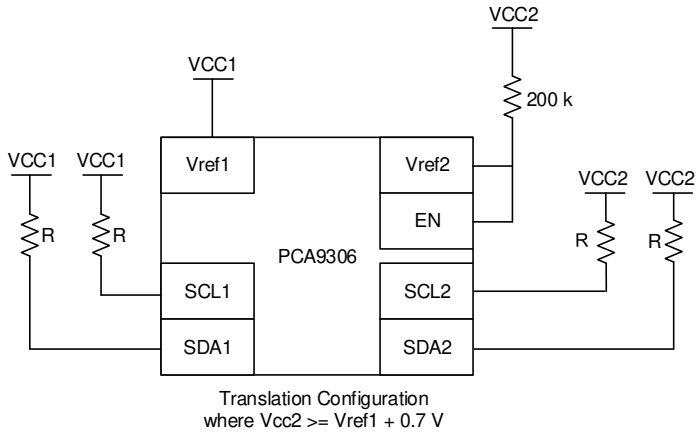

Figure 8-6. Translation Configuration

When PCA9306 is in the switch configuration (V_{REF1} = V_{REF2}), the propagation delays are different compared to the translator configuration. Taking a look at the propagation delays, if the pull up resistance and capacitance on both sides of the bus are equal, then in switch mode the PCA9306 has the same propagation delay from side one to two and side two to one. The propagation delays become lower when V_{CC1}/V_{CC2} is larger. For example, the propagation delay at 1.8 V is longer than at 5 V in the switching configuration. When PCA9306 is in translation mode, side one propagate lows to side two faster than side two can propagate lows to side 1. This time difference becomes larger the larger the difference between V_{CC2} and V_{CC1} becomes.

8.1.6 Controller on Side 1 or Side 2 of Device

I2C and SMBus are bidirectional protocol meaning devices on the bus can both transmit and receive data. PCA9306 was designed to allow for signals to be able to be transmitted from either side, thus allowing for the controller to be able to placed on either side of the device. Figure 8-7 shows the controller on side two as opposed to the diagram on page 1 of this data sheet.

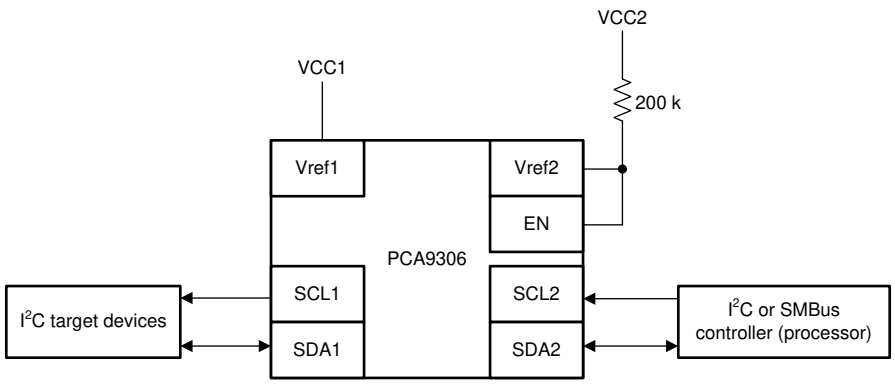

Figure 8-7. Controller on side 2 of PCA9306

8.1.7 LDO and PCA9306 Concerns

The V_{REF1} pin can be supplied by a low-dropout regulator (LDO), but in some cases the LDO may lose its regulation because of the bias current from V_{REF2} to V_{REF1}. If the LDO cannot sink the bias current, then the current has no other paths to ground and instead charges up the capacitance on the V_{REF1} node (both external and parasitic). This results in an increase in voltage on the V_{REF1} node. If no other paths for current to flow are established (such as back biasing of body diodes or clamping diodes through other devices on the V_{REF1} node), then the V_{REF1} voltage ends up stabilizing when V_{gs} of the pass FET is equal to V_{th}. This means V_{REF1} node voltage is V_{CC2} - V_{th}. Note that any targets/controllers running off of the LDO now see the V_{CC2} - V_{th} voltage which may cause damage to those targets/controllers if they are not rated to handle the increased voltage.

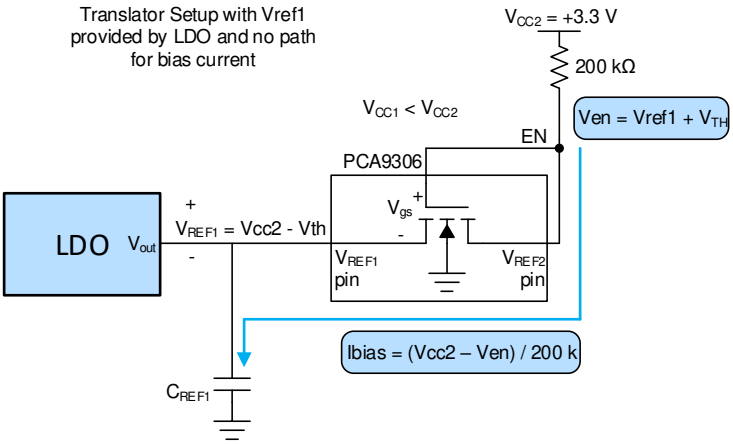

Figure 8-8. Example of no leakage current path when using LDO

To make sure the LDO does not lose regulation due to the bias current of PCA9306, a weak pull down resistor can be placed on V_{REF1} to ground to provide a path for the bias current to travel. The recommended pull down resistor is calculated by Equation 4 where 0.75 gives about 25% margin for error incase bias current increases during operation.

Copyright © 2023 Texas Instruments Incorporated

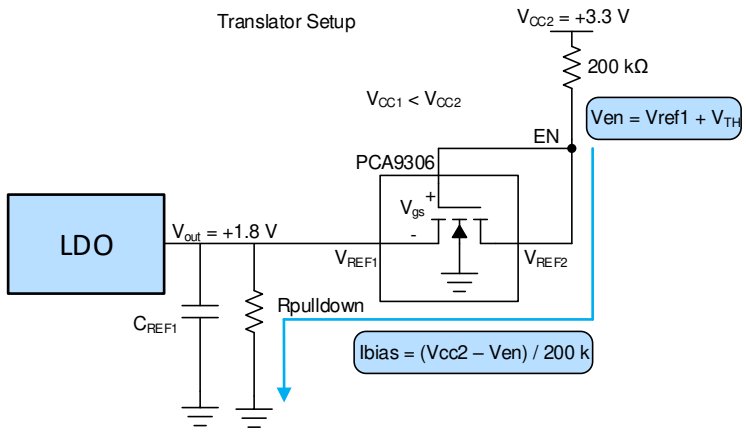

Figure 8-9. Example with Leakage current path when using an LDO

$$V_{en} = V_{REF1} + V_{th} \quad (1)$$

where

- V_{th} is approximately 0.6 V

$$I_{bias} = (V_{CC2} - V_{en})/200k \quad (2)$$

$$R_{pulldown} = V_{OUT}/I_{bias} \quad (3)$$

$$\text{Recommended } R_{pulldown} = R_{pulldown} \times 0.75 \quad (4)$$

8.1.8 Current Limiting Resistance on V_{REF2}

The resistor is used to limit the current between V_{REF2} and V_{REF1} (denoted as R_{CC}) and helps to establish the reference voltage on the enable pin. The 200k resistor can be changed to a lower value; however, the bias current proportionally increases as the resistor decreases.

$$I_{bias} = (V_{CC2} - V_{en})/R_{CC} : V_{en} = V_{REF1} + V_{th} \quad (5)$$

where

- V_{th} is approximately 0.6V

Keep in mind R_{CC} should not be sized low enough that I_{CC} exceeds the absolute maximum continuous channel current specified in section 6.1 which is described in Equation 6.

$$R_{CC}(min) \geq (V_{CC2} - V_{en})/0.128 : V_{en} = V_{REF1} + V_{th} \quad (6)$$

where

- V_{th} is approximately 0.6V

Copyright © 2023 Texas Instruments Incorporated

8.2 Functional Block Diagram

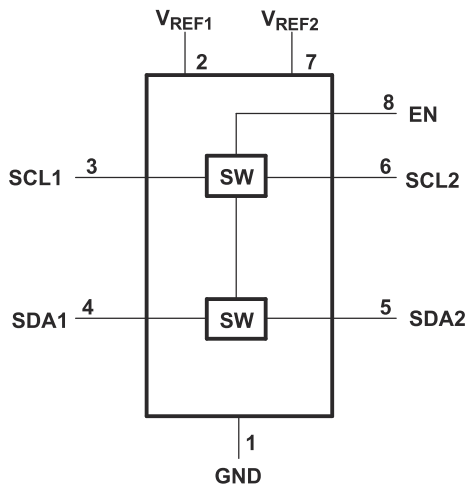

Figure 8-10. Block Diagram of PCA9306

8.3 Feature Description

8.3.1 Enable (EN) Pin

The PCA9306 device is a double-pole, single-throw switch in which the gate of the transistors is controlled by the voltage on the EN pin. In Figure 9-1, the PCA9306 device is always enabled when power is applied to V_{REF2}. In Figure 9-2, the device is enabled when a control signal from a processor is in a logic-high state.

8.3.2 Voltage Translation

The primary feature of the PCA9306 device is translating voltage from an I^2C bus referenced to V_{REF1} up to an I^2C bus referenced to V_{DPU}, to which V_{REF2} is connected through a 200-kΩ pullup resistor. Translation on a standard, open-drain I^2C bus is achieved by simply connecting pullup resistors from SCL1 and SDA1 to V_{REF1} and connecting pullup resistors from SCL2 and SDA2 to V_{DPU}. Information on sizing the pullup resistors can be found in the *Sizing Pullup Resistors* section.

8.4 Device Functional Modes

INPUT EN[(1)]	TRANSLATOR FUNCTION
H	Logic Lows are propagated from one side to the other, Logic Highs blocked (independent pull up resistors passively drive the line high)
L	Disconnect

(1) The SCL switch conducts if EN is ≥ 0.6 V higher than SCL1 or SCL2. The same is true of SDA.

Copyright © 2023 Texas Instruments Incorporated

9 Application and Implementation

Note

Information in the following applications sections is not part of the TI component specification, and TI does not warrant its accuracy or completeness. TI's customers are responsible for determining suitability of components for their purposes, as well as validating and testing their design implementation to confirm system functionality.

9.1 Application Information

9.1.1 General Applications of I²C

As with the standard I²C system, pullup resistors are required to provide the logic-high levels on the translator bus. The size of these pullup resistors depends on the system, but each side of the repeater must have a pullup resistor. The device is designed to work with standard-mode and fast-mode I²C devices in addition to SMBus devices. Standard-mode I²C devices only specify 3 mA in a generic I²C system where standard-mode devices and multiple controllers are possible. Under certain conditions, high termination currents can be used. When the SDA1 or SDA2 port is low, the clamp is in the ON state, and a low-resistance connection exists between the SDA1 and SDA2 ports. Assuming the higher voltage is on the SDA2 port when the SDA2 port is high, the voltage on the SDA1 port is limited to the voltage set by V_{REF1}. When the SDA1 port is high, the SDA2 port is pulled to the pullup supply voltage of the drain (V_{DPU}) by the pullup resistors. This functionality allows a seamless translation between higher and lower voltages selected by the user, without the need for directional control. The SCL1-SCL2 channel also functions in the same way as the SDA1-SDA2 channel.

9.2 Typical Application

Figure 9-1 and Figure 9-2 show how these pullup resistors are connected in a typical application, as well as two options for connecting the EN pin.

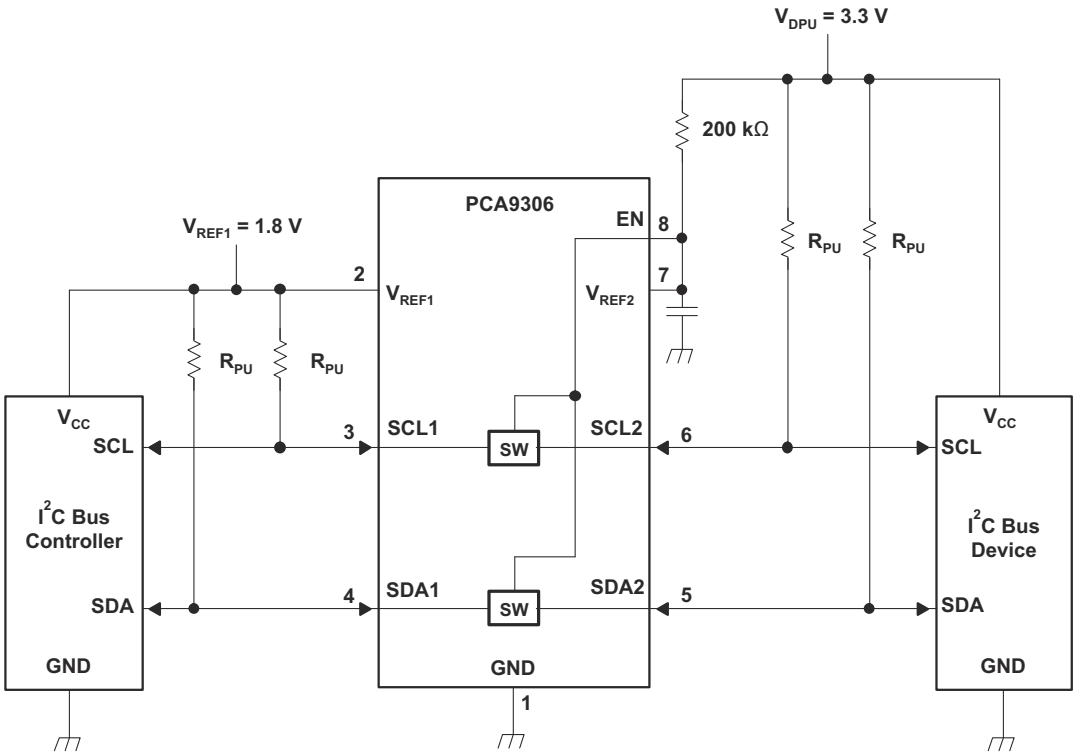

Figure 9-1. Typical Application Circuit (Switch Always Enabled)

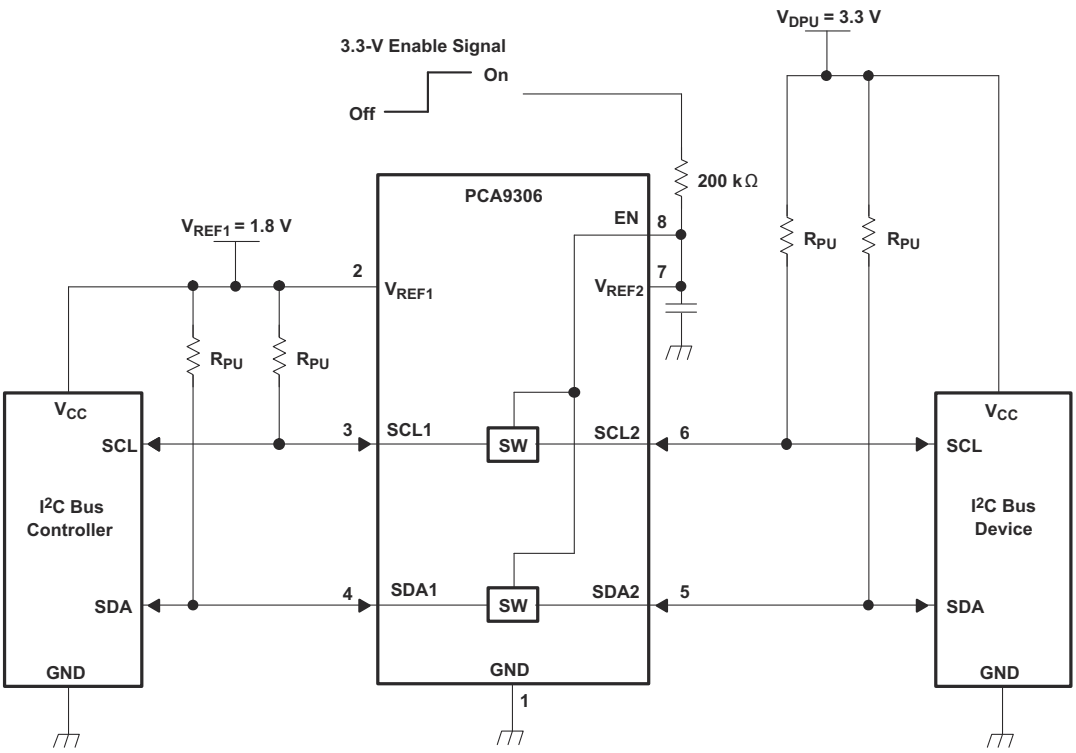

Figure 9-2. Typical Application Circuit (Switch Enable Control)

9.2.1 Design Requirements

		MIN	TYP(1)	MAX	UNIT
V_{REF2}	Reference voltage	V_{REF1} + 0.6	2.1	5	V
EN	Enable input voltage	V_{REF1} + 0.6	2.1	5	V
V_{REF1}	Reference voltage	1.2	1.5	4.4	V
I_{PASS}	Pass switch current		6		mA
I_{REF}	Reference-transistor current		5		µA

(1) All typical values are at T_A = 25°C.

9.2.2 Detailed Design Procedure

9.2.2.1 Bidirectional Voltage Translation

For the bidirectional clamping configuration (higher voltage to lower voltage or lower voltage to higher voltage), the EN input must be connected to V_{REF2} and both pins pulled to high-side V_{DPU} through a pullup resistor (typically 200 kΩ). This allows V_{REF2} to regulate the EN input. A 100-pF filter capacitor connected to V_{REF2} is recommended. The I²C bus controller output can be push-pull or open-drain (pullup resistors may be required) and the I²C bus device output can be open-drain (pullup resistors are required to pull the SCL2 and SDA2 outputs to V_{DPU}). However, if either output is push-pull, data must be unidirectional or the outputs must be 3-state capable and be controlled by some direction-control mechanism to prevent high-to-low contentions in either direction. If both outputs are open-drain, no direction control is needed.

9.2.2.2 Sizing Pullup Resistors

To get an estimate for the range of values that can be used for the pullup resistor, please refer to the application note SLVA689. Figure 9-3 and Figure 9-4 respectively show the maximum and minimum pullup resistance allowable by the I²C specification for standard-mode (100 kHz) and fast-mode (400 kHz) operation.

Copyright © 2023 Texas Instruments Incorporated

9.2.2.3 PCA9306 Bandwidth

The maximum frequency of the PCA9306 device depends on the application. The device can operate at speeds of > 100 MHz given the correct conditions. The maximum frequency is dependent upon the loading of the application.

Figure 6-3 shows a bandwidth measurement of the PCA9306 device using a two-port network analyzer.

However, this is an analog type of measurement. For digital applications, the signal should not degrade up to the fifth harmonic of the digital signal. As a rule of thumb, the frequency bandwidth should be at least five times the maximum digital clock rate. This component of the signal is very important in determining the overall shape of the digital signal. In the case of the PCA9306 device, digital clock frequency of >100 MHz can be achieved.

The PCA9306 device does not provide any drive capability like the PCA9515 or PCA9517 series of devices. Therefore, higher-frequency applications require higher drive strength from the host side. No pullup resistor is needed on the host side (3.3 V) if the PCA9306 device is being driven by standard CMOS push-pull output driver. Ideally, it is best to minimize the trace length from the PCA9306 device on the sink side (1.8 V) to minimize signal degradation.

You can then use a simple formula to compute the maximum *practical* frequency component or the *knee* frequency (f_{knee}). All fast edges have an infinite spectrum of frequency components. However, there is an inflection (or *knee*) in the frequency spectrum of fast edges where frequency components higher than f_{knee} are insignificant in determining the shape of the signal.

To calculate f_{knee}:

$$f_{knee} = 0.5 / RT\ (10\%–90\%) \tag{7}$$

$$f_{knee} = 0.4 / RT\ (20\%–80\%) \tag{8}$$

For signals with rise-time characteristics based on 10- to 90-percent thresholds, f_{knee} is equal to 0.5 divided by the rise time of the signal. For signals with rise-time characteristics based on 20- to 80-percent thresholds, which is very common in many current device specifications, f_{knee} is equal to 0.4 divided by the rise time of the signal.

Some guidelines to follow that help maximize the performance of the device:

- Keep trace length to a minimum by placing the PCA9306 device close to the I^2C output of the processor.
- The trace length should be less than half the time of flight to reduce ringing and line reflections or non-monotonic behavior in the switching region.
- To reduce overshoots, a pullup resistor can be added on the 1.8 V side; be aware that a slower fall time is to be expected.

Copyright © 2023 Texas Instruments Incorporated

9.2.3 Application Curve

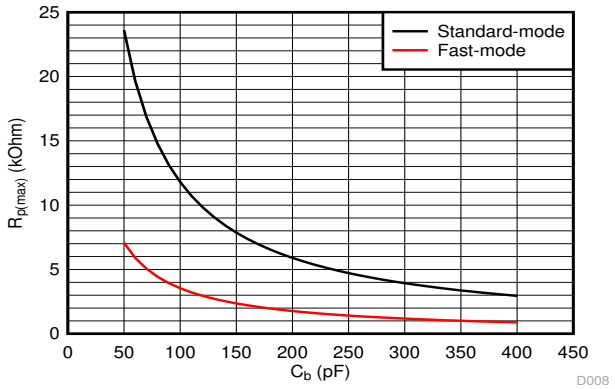

Standard mode (f_{SCL} = 100 kHz, t_r = 1 µs)

Fast mode (f_{SCL} = 400 kHz, t_r = 300 ns)

Figure 9-3. Maximum Pullup Resistance ($R_{p(max)}$) vs Bus Capacitance (C_b)

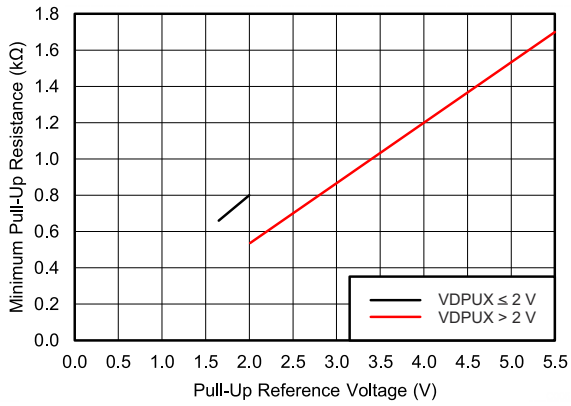

V_{OL} = 0.2 x V_{DPUX} , I_{OL} = 2 mA when V_{DPUX} ≤ 2 V

V_{OL} = 0.4 V, I_{OL} = 3 mA when V_{DPUX} > 2 V

Figure 9-4. Minimum Pullup Resistance ($R_{p(min)}$) vs Pullup Reference Voltage (V_{DPUX})

Copyright © 2023 Texas Instruments Incorporated

10 Power Supply Recommendations

For supplying power to the PCA9306 device, the V_{REF1} pin can be connected directly to a power supply. The V_{REF2} pin must be connected to the V_{DPU} power supply through a 200-kΩ resistor. Failure to have a high-impedance resistor between V_{REF2} and V_{DPU} results in excessive current draw and unreliable device operation. It is also worth noting, that in order to support voltage translation, the PCA9306 must have the EN and VREF2 pins shorted and then pulled up to V_{DPU} through a high-impedance resistor.

Copyright © 2023 Texas Instruments Incorporated

11 Layout

11.1 Layout Guidelines

For printed-circuit board (PCB) layout of the PCA9306 device, common PCB layout practices should be followed, but additional concerns related to high-speed data transfer such as matched impedances and differential pairs are not a concern for I^2C signal speeds.

In all PCB layouts, it is a best practice to avoid right angles in signal traces, to fan out signal traces away from each other on leaving the vicinity of an integrated circuit (IC), and to use thicker trace widths to carry higher amounts of current that commonly pass through power and ground traces. The 100-pF filter capacitor should be placed as close to V_{REF2} as possible. A larger decoupling capacitor can also be used, but a longer time constant of two capacitors and the 200-kΩ resistor results in longer turnon and turnoff times for the PCA9306 device. These best practices are shown in Figure 11-1.

For the layout example provided in Figure 11-1, it would be possible to fabricate a PCB with only two layers by using the top layer for signal routing and the bottom layer as a split plane for power (V_{CC}) and ground (GND). However, a four-layer board is preferable for boards with higher-density signal routing. On a four-layer PCB, it is common to route signals on the top and bottom layer, dedicate one internal layer to a ground plane, and dedicate the other internal layer to a power plane. In a board layout using planes or split planes for power and ground, vias are placed directly next to the surface-mount component pad, which must attach to V_{CC} or GND, and the via is connected electrically to the internal layer or the other side of the board. Vias are also used when a signal trace must be routed to the opposite side of the board, but this technique is not demonstrated in Figure 11-1.

11.2 Layout Example

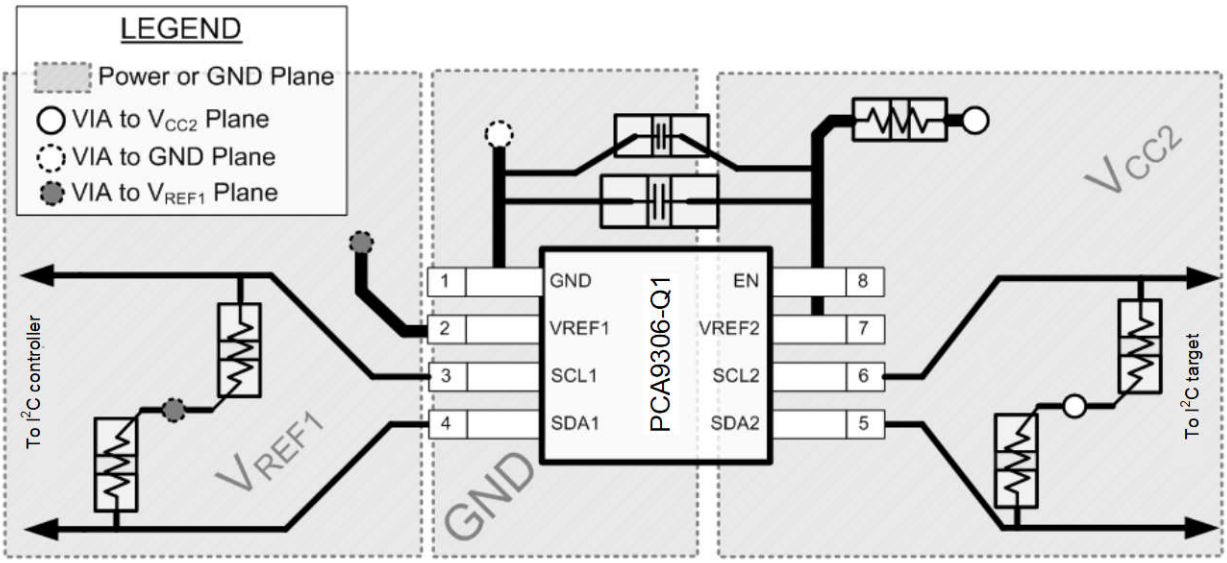

Figure 11-1. PCA9306 Layout Example

Copyright © 2023 Texas Instruments Incorporated

12 Device and Documentation Support

12.1 Receiving Notification of Documentation Updates

To receive notification of documentation updates, navigate to the device product folder on ti.com. In the upper right corner, click on *Alert me* to register and receive a weekly digest of any product information that has changed. For change details, review the revision history included in any revised document.

12.2 Support Resources

TI E2E™ support forums are an engineer's go-to source for fast, verified answers and design help — straight from the experts. Search existing answers or ask your own question to get the quick design help you need.

Linked content is provided "AS IS" by the respective contributors. They do not constitute TI specifications and do not necessarily reflect TI's views; see TI's Terms of Use.

12.3 Trademarks

TI E2E™ is a trademark of Texas Instruments.
All trademarks are the property of their respective owners.

12.4 Electrostatic Discharge Caution

This integrated circuit can be damaged by ESD. Texas Instruments recommends that all integrated circuits be handled with appropriate precautions. Failure to observe proper handling and installation procedures can cause damage.

ESD damage can range from subtle performance degradation to complete device failure. Precision integrated circuits may be more susceptible to damage because very small parametric changes could cause the device not to meet its published specifications.

12.5 Glossary

TI Glossary	This glossary lists and explains terms, acronyms, and definitions.

Mechanical, Packaging, and Orderable Information

The following pages include mechanical, packaging, and orderable information. This information is the most-current data available for the designated device. This data is subject to change without notice and without revision of this document. For browser-based versions of this data sheet, see the left-hand navigation pane.

Copyright © 2023 Texas Instruments Incorporated

PACKAGING INFORMATION

Orderable part number	Status (1)	Material type (2)	Package | Pins	Package qty | Carrier	RoHS (3)	Lead finish/ Ball material (4)	MSL rating/ Peak reflow (5)	Op temp (°C)	Part marking (6)
PCA9306DCTR	Active	Production	SSOP (DCT) | 8	3000 | LARGE T&R	Yes	NIPDAU	Level-1-260C-UNLIM	-40 to 85	7BD (G, S, Y)
PCA9306DCTR.A	Active	Production	SSOP (DCT) | 8	3000 | LARGE T&R	Yes	NIPDAU	Level-1-260C-UNLIM	-40 to 85	7BD (G, S, Y)
PCA9306DCTT	Active	Production	SSOP (DCT) | 8	250 | SMALL T&R	Yes	NIPDAU	Level-1-260C-UNLIM	-40 to 85	7BD (G, S, Y)
PCA9306DCTT.A	Active	Production	SSOP (DCT) | 8	250 | SMALL T&R	Yes	NIPDAU	Level-1-260C-UNLIM	-40 to 85	7BD (G, S, Y)
PCA9306DCUR	Active	Production	VSSOP (DCU) | 8	3000 | LARGE T&R	Yes	NIPDAU | SN	Level-1-260C-UNLIM	-40 to 85	(29O4, 7BDP, 7BDS, 7BDY)
PCA9306DCUR.A	Active	Production	VSSOP (DCU) | 8	3000 | LARGE T&R	Yes	NIPDAU	Level-1-260C-UNLIM	-40 to 85	(29O4, 7BDP, 7BDS, 7BDY)
PCA9306DCUT	Active	Production	VSSOP (DCU) | 8	250 | SMALL T&R	Yes	NIPDAU | SN	Level-1-260C-UNLIM	-40 to 85	(29O4, 7BDP, 7BDS, 7BDY)
PCA9306DCUT.A	Active	Production	VSSOP (DCU) | 8	250 | SMALL T&R	Yes	NIPDAU	Level-1-260C-UNLIM	-40 to 85	(29O4, 7BDP, 7BDS, 7BDY)
PCA9306DQER	Active	Production	X2SON (DQE) | 8	5000 | LARGE T&R	Yes	NIPDAU | NIPDAUAG	Level-1-260C-UNLIM	-40 to 85	(3M, 7F)
PCA9306DQER.A	Active	Production	X2SON (DQE) | 8	5000 | LARGE T&R	Yes	NIPDAUAG	Level-1-260C-UNLIM	-40 to 85	(3M, 7F)
PCA9306DQER.B	Active	Production	X2SON (DQE) | 8	5000 | LARGE T&R	Yes	NIPDAUAG	Level-1-260C-UNLIM	-40 to 85	(3M, 7F)
PCA9306YZTR	Active	Production	DSBGA (YZT) | 8	3000 | LARGE T&R	Yes	SNAGCU	Level-1-260C-UNLIM	-40 to 85	7F
PCA9306YZTR.B	Active	Production	DSBGA (YZT) | 8	3000 | LARGE T&R	Yes	SNAGCU	Level-1-260C-UNLIM	-40 to 85	7F

(1) **Status:** For more details on status, see our product life cycle.

(2) **Material type:** When designated, preproduction parts are prototypes/experimental devices, and are not yet approved or released for full production. Testing and final process, including without limitation quality assurance, reliability performance testing, and/or process qualification, may not yet be complete, and this item is subject to further changes or possible discontinuation. If available for ordering, purchases will be subject to an additional waiver at checkout, and are intended for early internal evaluation purposes only. These items are sold without warranties of any kind.

(3) **RoHS values:** Yes, No, RoHS Exempt. See the TI RoHS Statement for additional information and value definition.

(4) **Lead finish/Ball material:** Parts may have multiple material finish options. Finish options are separated by a vertical ruled line. Lead finish/Ball material values may wrap to two lines if the finish value exceeds the maximum column width.

(5) **MSL rating/Peak reflow:** The moisture sensitivity level ratings and peak solder (reflow) temperatures. In the event that a part has multiple moisture sensitivity ratings, only the lowest level per JEDEC standards is shown. Refer to the shipping label for the actual reflow temperature that will be used to mount the part to the printed circuit board.

(6) **Part marking:** There may be an additional marking, which relates to the logo, the lot trace code information, or the environmental category of the part.

Multiple part markings will be inside parentheses. Only one part marking contained in parentheses and separated by a "~" will appear on a part. If a line is indented then it is a continuation of the previous line and the two combined represent the entire part marking for that device.

Important Information and Disclaimer: The information provided on this page represents TI's knowledge and belief as of the date that it is provided. TI bases its knowledge and belief on information provided by third parties, and makes no representation or warranty as to the accuracy of such information. Efforts are underway to better integrate information from third parties. TI has taken and continues to take reasonable steps to provide representative and accurate information but may not have conducted destructive testing or chemical analysis on incoming materials and chemicals. TI and TI suppliers consider certain information to be proprietary, and thus CAS numbers and other limited information may not be available for release.

In no event shall TI's liability arising out of such information exceed the total purchase price of the TI part(s) at issue in this document sold by TI to Customer on an annual basis.

OTHER QUALIFIED VERSIONS OF PCA9306 :

- Automotive : PCA9306-Q1

NOTE: Qualified Version Definitions:

- Automotive - Q100 devices qualified for high-reliability automotive applications targeting zero defects

TAPE AND REEL INFORMATION

REEL DIMENSIONS

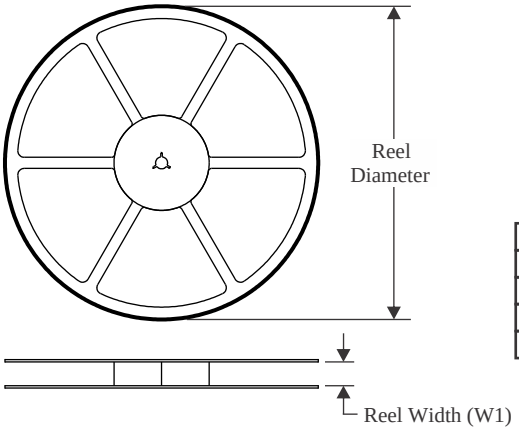

TAPE DIMENSIONS

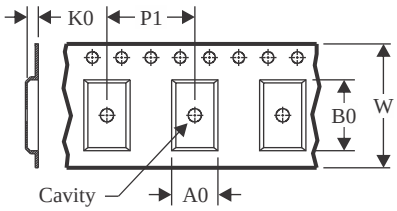

A0	Dimension designed to accommodate the component width
B0	Dimension designed to accommodate the component length
K0	Dimension designed to accommodate the component thickness
W	Overall width of the carrier tape
P1	Pitch between successive cavity centers

QUADRANT ASSIGNMENTS FOR PIN 1 ORIENTATION IN TAPE

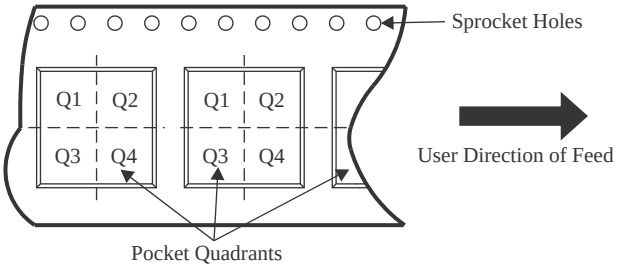

*All dimensions are nominal

Device	Package Type	Package Drawing	Pins	SPQ	Reel Diameter (mm)	Reel Width W1 (mm)	A0 (mm)	B0 (mm)	K0 (mm)	P1 (mm)	W (mm)	Pin1 Quadrant
PCA9306DCTR	SSOP	DCT	8	3000	177.8	12.4	3.45	4.4	1.45	4.0	12.0	Q3
PCA9306DCTT	SSOP	DCT	8	250	177.8	12.4	3.45	4.4	1.45	4.0	12.0	Q3
PCA9306DCUR	VSSOP	DCU	8	3000	178.0	9.0	2.25	3.35	1.05	4.0	8.0	Q3
PCA9306DCUT	VSSOP	DCU	8	250	178.0	9.0	2.25	3.35	1.05	4.0	8.0	Q3
PCA9306DQER	X2SON	DQE	8	5000	180.0	9.5	1.15	1.6	0.5	4.0	8.0	Q1
PCA9306YZTR	DSBGA	YZT	8	3000	180.0	8.4	1.02	2.02	0.75	4.0	8.0	Q1

TAPE AND REEL BOX DIMENSIONS

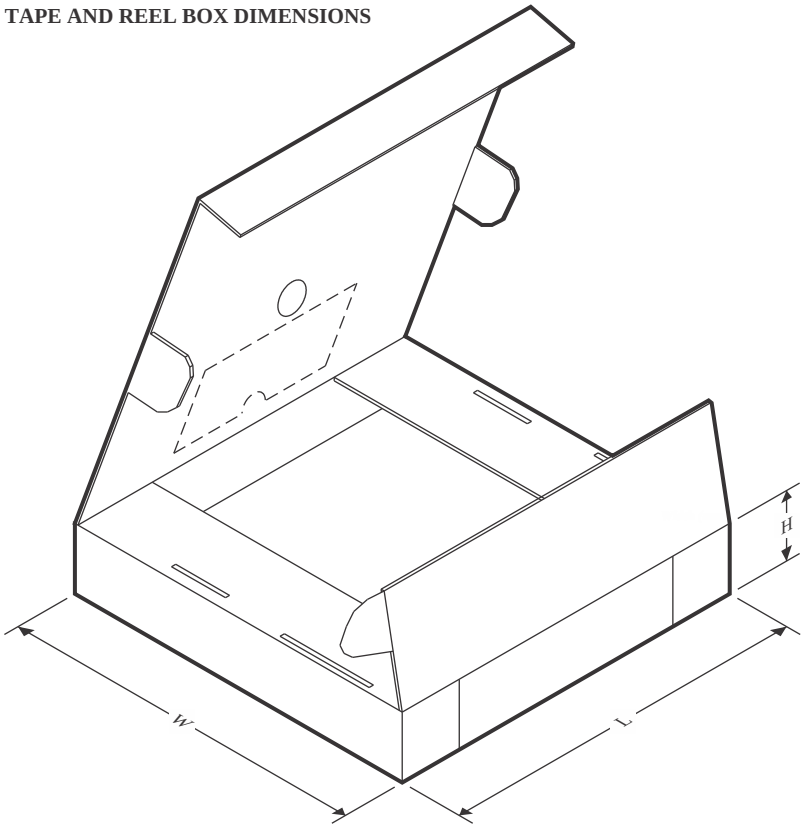

*All dimensions are nominal

Device	Package Type	Package Drawing	Pins	SPQ	Length (mm)	Width (mm)	Height (mm)
PCA9306DCTR	SSOP	DCT	8	3000	183.0	183.0	20.0
PCA9306DCTT	SSOP	DCT	8	250	183.0	183.0	20.0
PCA9306DCUR	VSSOP	DCU	8	3000	180.0	180.0	18.0
PCA9306DCUT	VSSOP	DCU	8	250	180.0	180.0	18.0
PCA9306DQER	X2SON	DQE	8	5000	184.0	184.0	19.0
PCA9306YZTR	DSBGA	YZT	8	3000	182.0	182.0	20.0

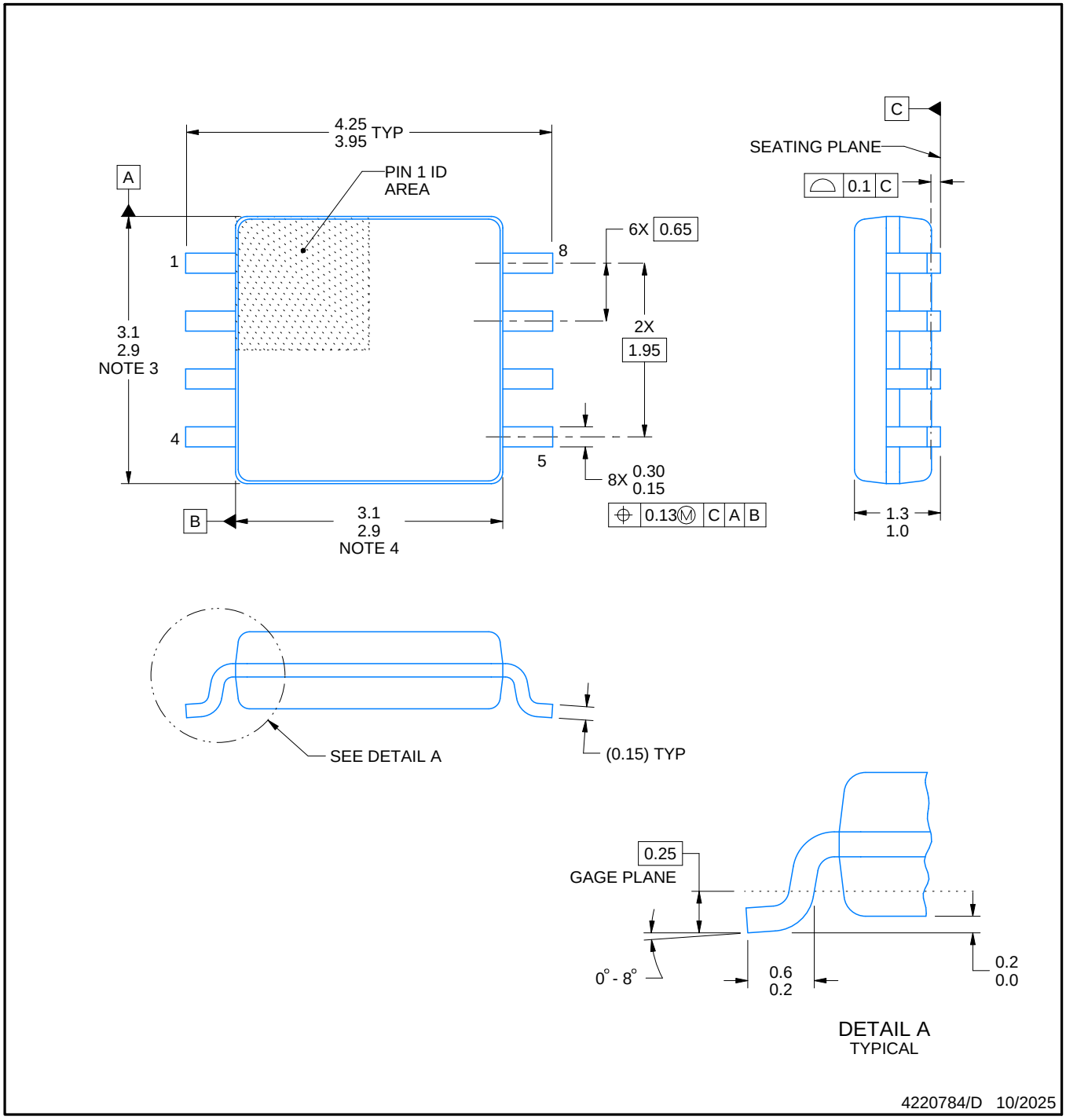

NOTES:

1. All linear dimensions are in millimeters. Dimensions in parenthesis are for reference only. Dimensioning and tolerancing per ASME Y14.5M.
2. This drawing is subject to change without notice.
3. This dimension does not include mold flash, protrusions, or gate burrs. Mold flash, protrusions, or gate burrs shall not exceed 0.15 mm per side.
4. This dimension does not include interlead flash. Interlead flash shall not exceed 0.25 mm per side.

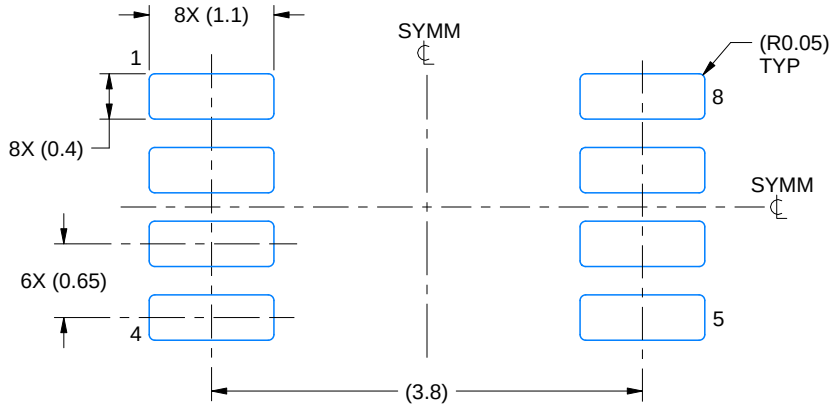

LAND PATTERN EXAMPLE
EXPOSED METAL SHOWN
SCALE:15X

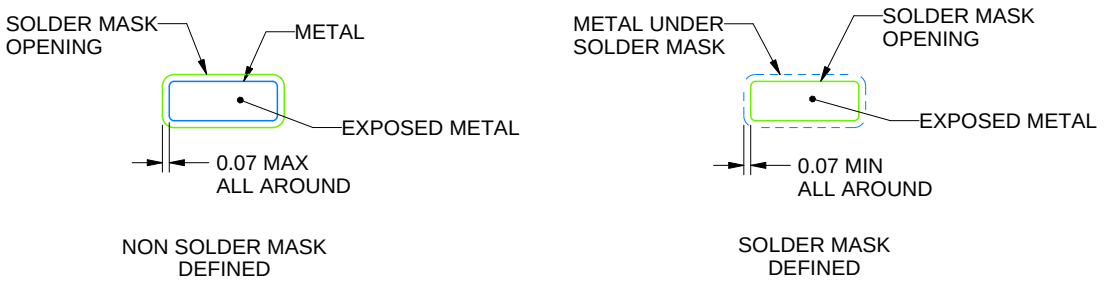

SOLDER MASK DETAILS

4220784/D 10/2025

NOTES: (continued)

5. Publication IPC-7351 may have alternate designs.
6. Solder mask tolerances between and around signal pads can vary based on board fabrication site.

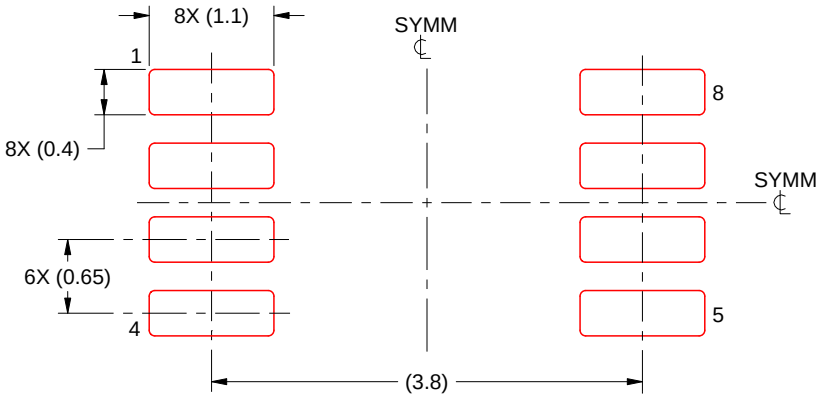

SOLDER PASTE EXAMPLE
BASED ON 0.125 mm THICK STENCIL
SCALE:15X

4220784/D 10/2025

NOTES: (continued)

7. Laser cutting apertures with trapezoidal walls and rounded corners may offer better paste release. IPC-7525 may have alternate design recommendations.
8. Board assembly site may have different recommendations for stencil design.

DCU0008A

PACKAGE OUTLINE

VSSOP - 0.9 mm max height

SMALL OUTLINE PACKAGE

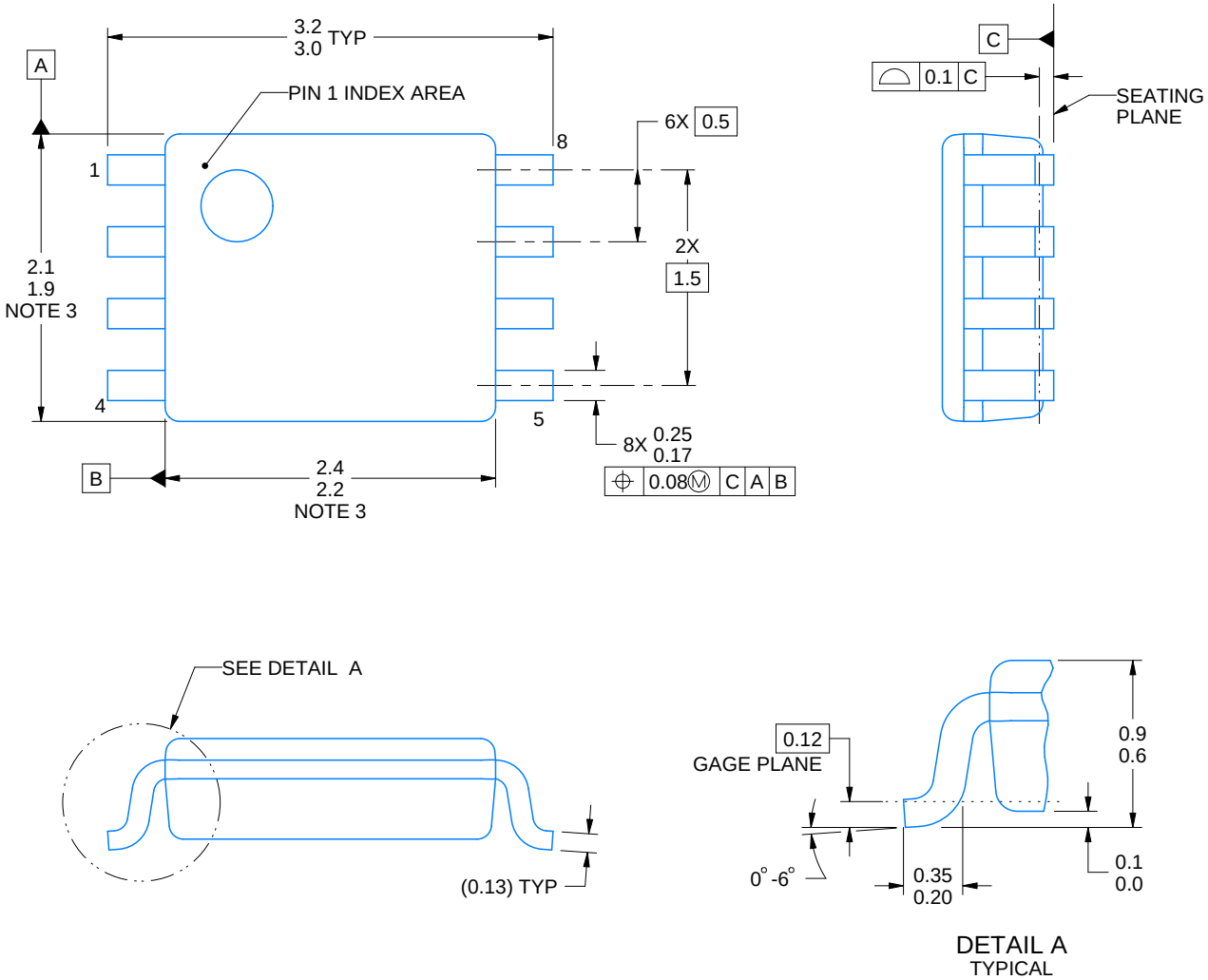

4225266/A 09/2014

NOTES:

1. All linear dimensions are in millimeters. Any dimensions in parenthesis are for reference only. Dimensioning and tolerancing per ASME Y14.5M.
2. This drawing is subject to change without notice.
3. This dimension does not include mold flash, protrusions, or gate burrs. Mold flash, protrusions, or gate burrs shall not exceed 0.15 mm per side.
4. Reference JEDEC registration MO-187 variation CA.

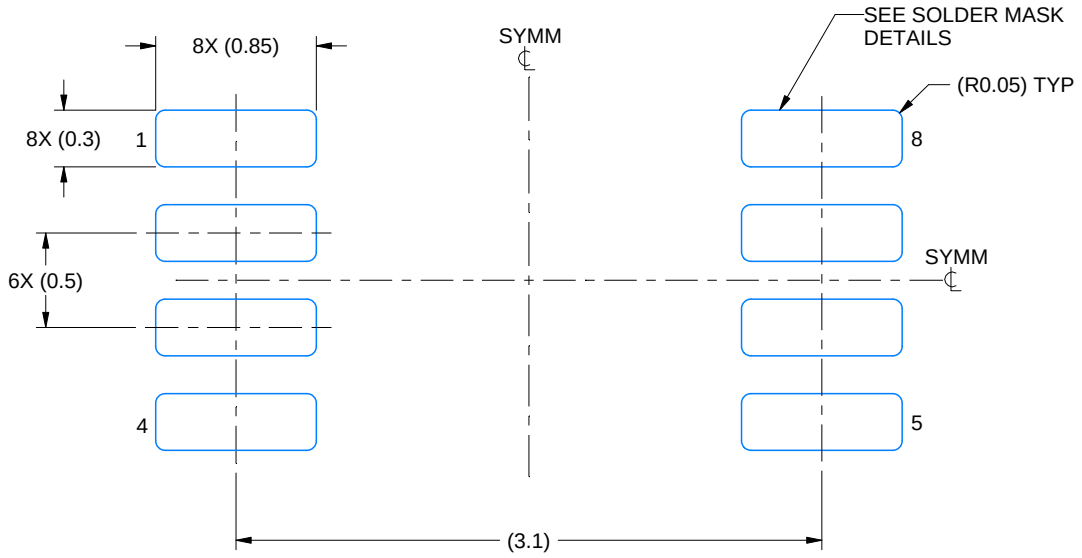

LAND PATTERN EXAMPLE
EXPOSED METAL SHOWN
SCALE: 25X

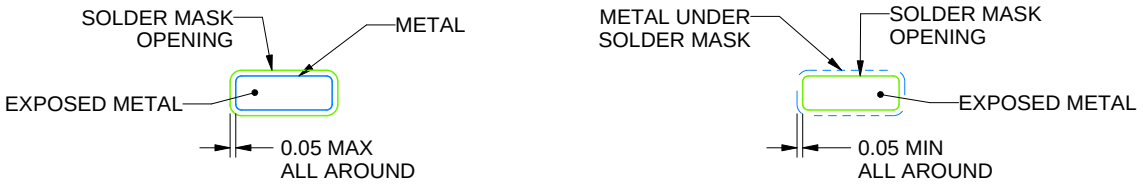

SOLDER MASK DETAILS

4225266/A 09/2014

NOTES: (continued)

5. Publication IPC-7351 may have alternate designs.
6. Solder mask tolerances between and around signal pads can vary based on board fabrication site.

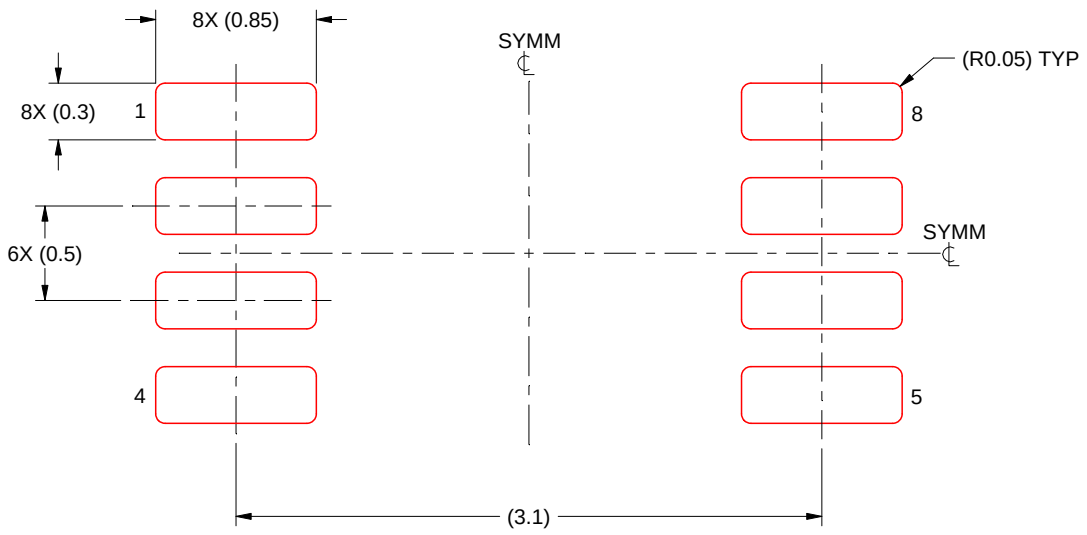

SOLDER PASTE EXAMPLE
BASED ON 0.125 mm THICK STENCIL
SCALE: 25X

4225266/A 09/2014

NOTES: (continued)

7. Laser cutting apertures with trapezoidal walls and rounded corners may offer better paste release. IPC-7525 may have alternate design recommendations.
8. Board assembly site may have different recommendations for stencil design.

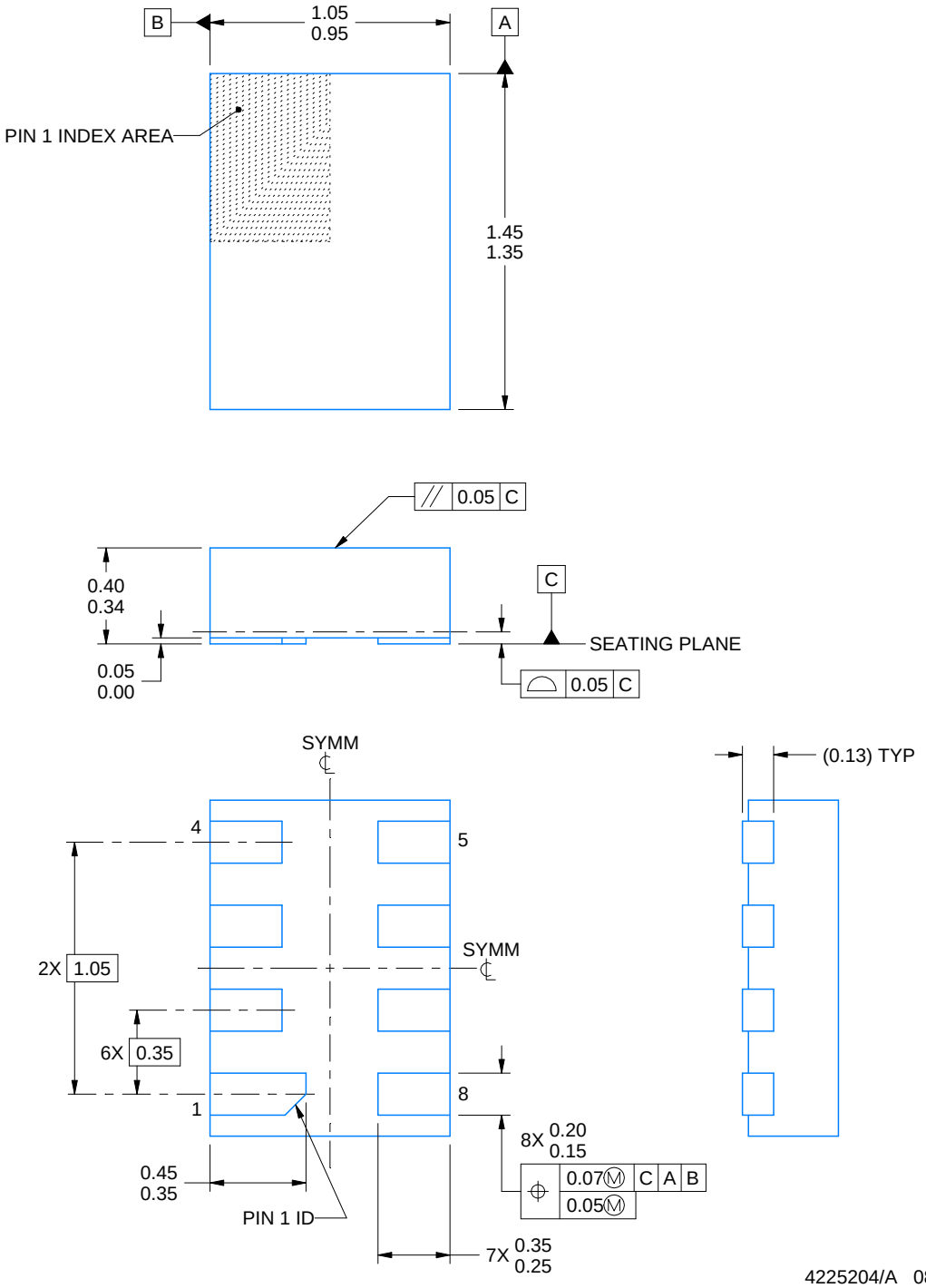

NOTES:

1. All linear dimensions are in millimeters. Any dimensions in parenthesis are for reference only. Dimensioning and tolerancing per ASME Y14.5M.
2. This drawing is subject to change without notice.
3. This package complies to JEDEC MO-287 variation X2EAF.

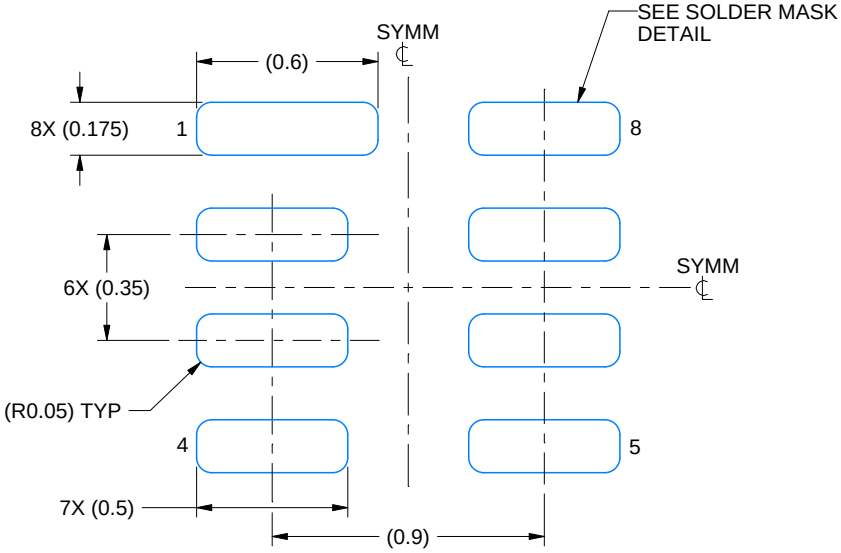

LAND PATTERN EXAMPLE
EXPOSED METAL SHOWN
SCALE: 40X

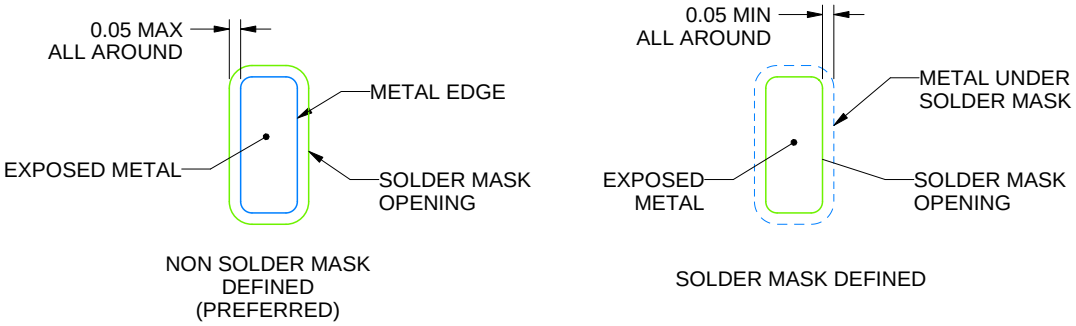

SOLDER MASK DETAILS

4225204/A 08/2019

NOTES: (continued)

4. This package is designed to be soldered to a thermal pad on the board. For more information, see Texas Instruments literature number SLUA271 (www.ti.com/lit/slua271).

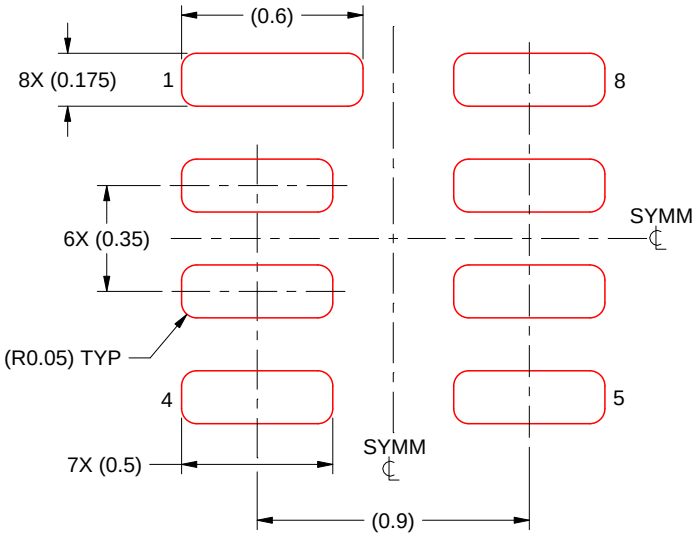

SOLDER PASTE EXAMPLE
BASED ON 0.075 MM THICK STENCIL
SCALE: 40X

4225204/A 08/2019

NOTES: (continued)

5. Laser cutting apertures with trapezoidal walls and rounded corners may offer better paste release. IPC-7525 may have alternate design recommendations.

YZT (R–XBGA–N8) DIE–SIZE BALL GRID ARRAY

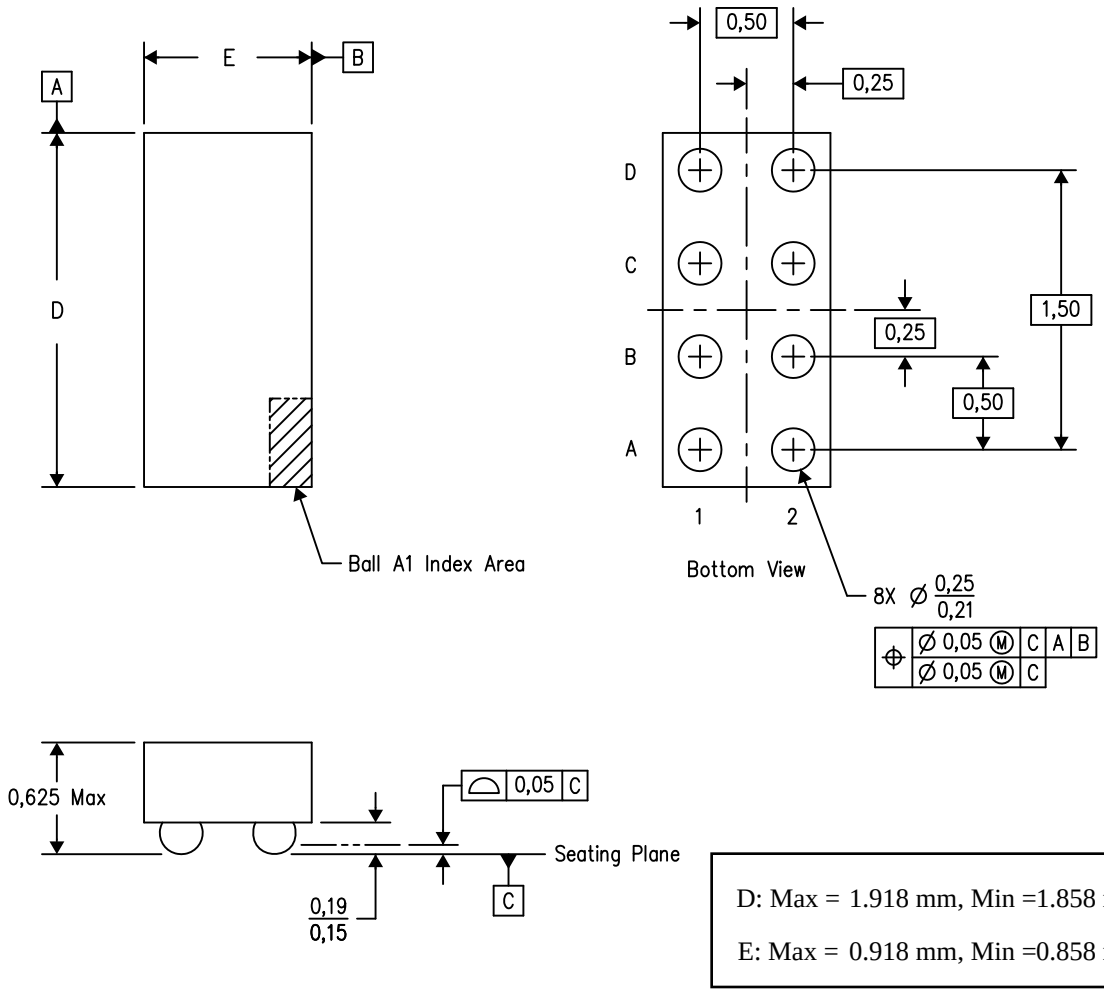

NOTES:
A. All linear dimensions are in millimeters. Dimensioning and tolerancing per ASME Y14.5M–1994.
B. This drawing is subject to change without notice.
C. NanoFree™ package configuration.

NanoFree is a trademark of Texas Instruments.

IMPORTANT NOTICE AND DISCLAIMER

TI PROVIDES TECHNICAL AND RELIABILITY DATA (INCLUDING DATASHEETS), DESIGN RESOURCES (INCLUDING REFERENCE DESIGNS), APPLICATION OR OTHER DESIGN ADVICE, WEB TOOLS, SAFETY INFORMATION, AND OTHER RESOURCES “AS IS” AND WITH ALL FAULTS, AND DISCLAIMS ALL WARRANTIES, EXPRESS AND IMPLIED, INCLUDING WITHOUT LIMITATION ANY IMPLIED WARRANTIES OF MERCHANTABILITY, FITNESS FOR A PARTICULAR PURPOSE OR NON-INFRINGEMENT OF THIRD PARTY INTELLECTUAL PROPERTY RIGHTS.

These resources are intended for skilled developers designing with TI products. You are solely responsible for (1) selecting the appropriate TI products for your application, (2) designing, validating and testing your application, and (3) ensuring your application meets applicable standards, and any other safety, security, regulatory or other requirements.

These resources are subject to change without notice. TI grants you permission to use these resources only for development of an application that uses the TI products described in the resource. Other reproduction and display of these resources is prohibited. No license is granted to any other TI intellectual property right or to any third party intellectual property right. TI disclaims responsibility for, and you fully indemnify TI and its representatives against any claims, damages, costs, losses, and liabilities arising out of your use of these resources.

TI’s products are provided subject to TI’s Terms of Sale, TI’s General Quality Guidelines, or other applicable terms available either on ti.com or provided in conjunction with such TI products. TI’s provision of these resources does not expand or otherwise alter TI’s applicable warranties or warranty disclaimers for TI products. Unless TI explicitly designates a product as custom or customer-specified, TI products are standard, catalog, general purpose devices.

TI objects to and rejects any additional or different terms you may propose.

Copyright © 2026, Texas Instruments Incorporated

Last updated 10/2025