PS9113

Data Sheet

R08DS0124EJ0200
Rev.2.00
Apr 13, 2015

1 Mbps, OPEN COLLECTOR OUTPUT
HIGH CMR, INTELLIGENT POWER MODULE 5-PIN SOP
(SO-5) PHOTOCOUPLER

Description

The PS9113 is an optically coupled isolator containing a GaAlAs LED on the input side and a photo diode and a signal processing circuit on the output side on one chip.

The PS9113 is specified high CMR, high CTR and pulse width distortion with operating temperature. It is suitable for IPM drive.

Features

- High instantaneous common mode rejection voltage (CM_H, CM_L = ±15 kV/μs MIN.)
- Small package (SO-5)
- High-speed response (t_{PHL} = 500 ns MAX., t_{PLH} = 750 ns MAX.)
- Maximum propagation delays ($t_{PLH} - t_{PHL}$ = 270 ns TYP.)
- Pulse width distortion ($|t_{PHL} - t_{PLH}|$ = 270 ns TYP.)
- High isolation voltage (BV = 3 750 Vr.m.s.)
- Open collector output
- Ordering number of taping product: PS9113-F3, F4: 2 500 pcs/reel
- Pb-Free product
- Safety standards
  - UL approved: File No. E72422
  - DIN EN60747-5-5 (VDE0884-5):2011-11 approved: No. 40008902 (Option)

PIN CONNECTION
(Top View)

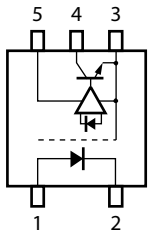

1. Anode
2. Cathode
3. GND
4. V_O
5. V_{CC}

APPLICATIONS

- IPM Driver
- General purpose inverter

PACKAGE DIMENSIONS (UNIT: mm)

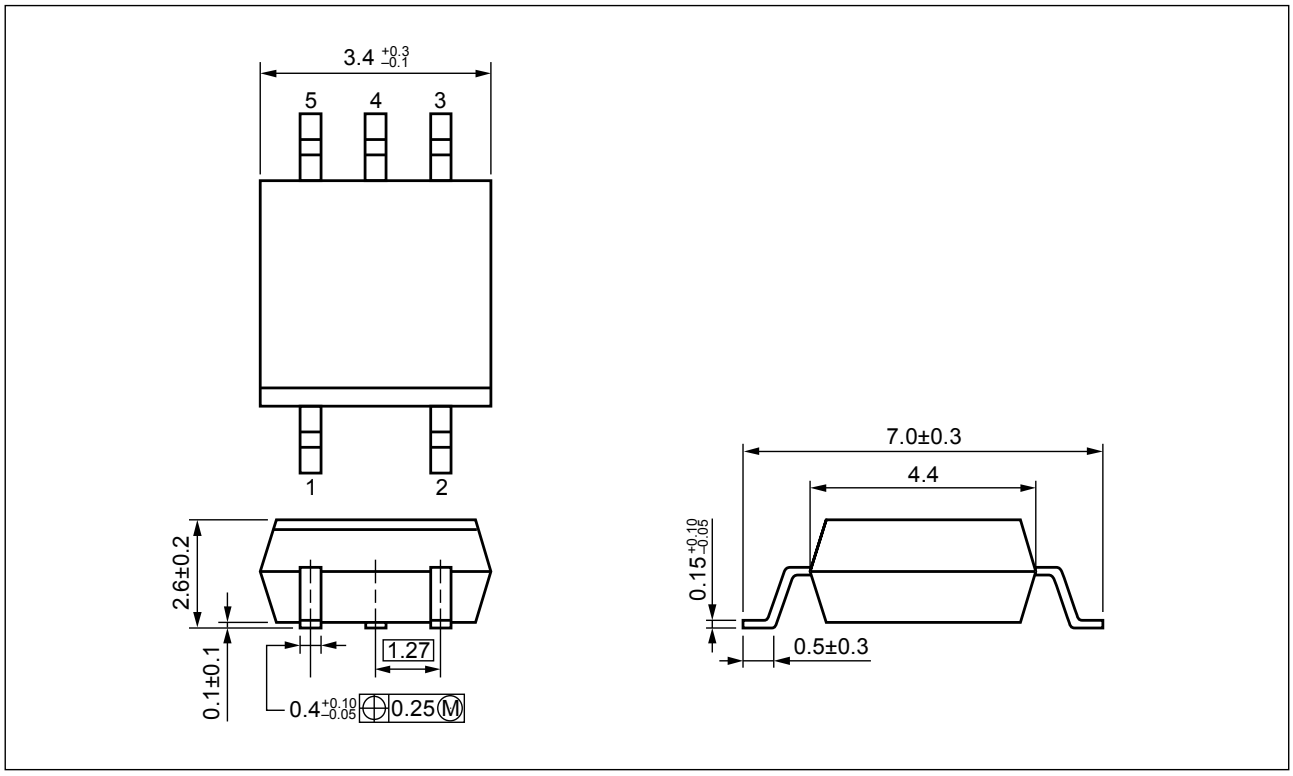

FUNCTIONAL DIAGRAM

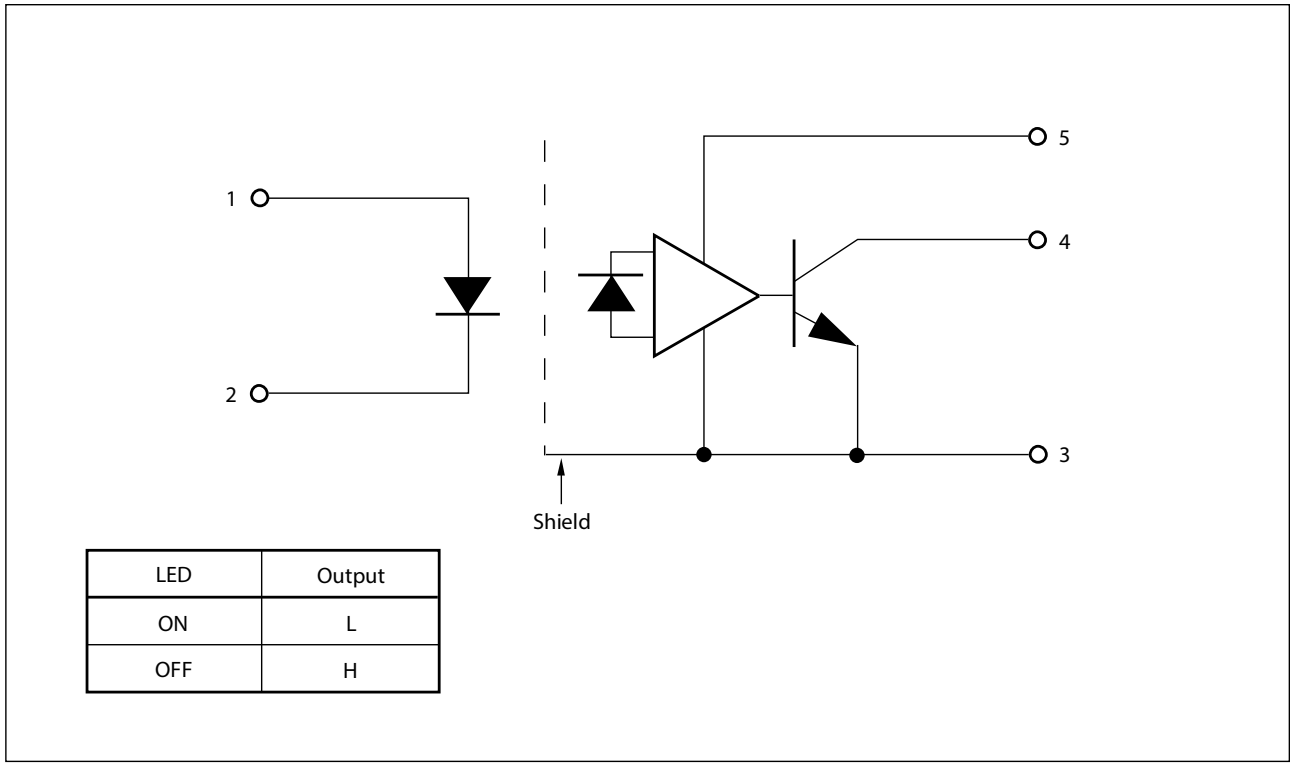

LED	Output
ON	L
OFF	H

MARKING EXAMPLE

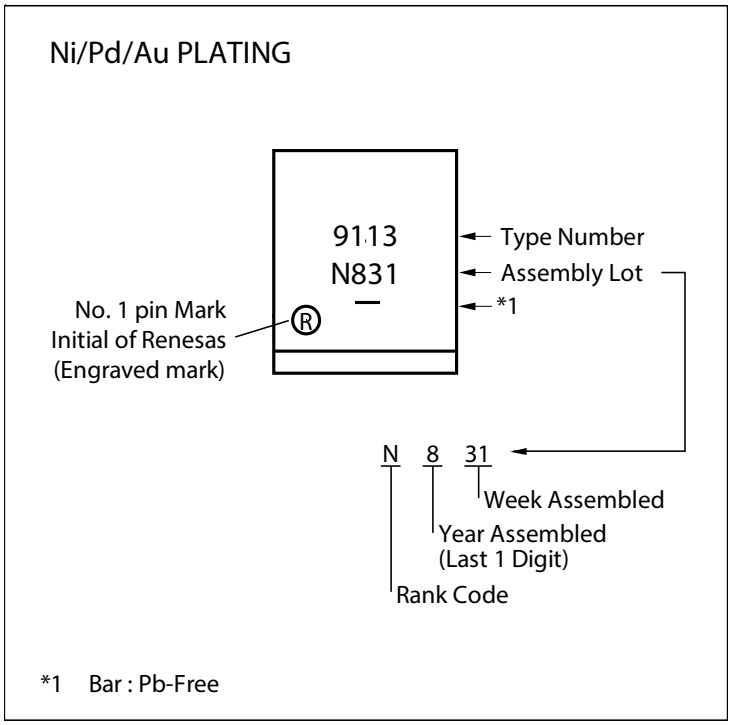

ORDERING INFORMATION

Part Number	Order Number	Solder Plating Specification	Packing Style	Safety Standard Approval	Application Part Number*1
PS9113	PS9113-AX	Pb-Free (Ni/Pd/Au)	20 pcs (Tape 20 pcs cut)	Standard products (UL approved)	PS9113
PS9113-F3	PS9113-F3-AX		Embossed Tape 2500 pcs/reel		
PS9113-F4	PS9113-F4-AX				
PS9113-V	PS9113-V-AX		20 pcs (Tape 20 pcs cut)	DIN EN60747-5-5 (VDE0884-5):2011-11 Approved (Option)	
PS9113-V-F3	PS9113-V-F3-AX		Embossed Tape 2 500 pcs/reel		
PS9113-V-F4	PS9113-V-F4-AX				

Notes*: 1. For the application of the Safety Standard, following part number should be used.

ABSOLUTE MAXIMUM RATINGS (T_A = 25°C, unless otherwise specified)

Parameter		Symbol	Ratings	Unit
Diode	Forward Current*1	I_F	25	mA
	Reverse Voltage	V_R	5	V
Detector	Supply Voltage	V_{CC}	−0.5 to +25	V
	Output Voltage	V_O	−0.5 to +25	V
	Output Current	I_O	15	mA
	Power Dissipation*2	P_C	100	mW
Isolation Voltage*3		BV	3 750	Vr.m.s.
Operating Ambient Temperature		T_A	−40 to +100	°C
Storage Temperature		T_{stg}	−55 to +125	°C

Notes*: 1. Reduced to 0.33 mA/°C at T_A = 70°C or more.
2. Reduced to 1.9 mW/°C at T_A = 70°C or more.
3. AC voltage for 1 minute at T_A = 25°C, RH = 60% between input and output.
Pins 1-2 shorted together, 3-5 shorted together.

RECOMMENDED OPERATING CONDITIONS

Parameter	Symbol	MIN.	TYP.	MAX.	Unit
High Level Input Current	I_{FH}	10		20	mA
Output Voltage	V_O	0		20	V
Supply Voltage	V_{CC}	4.5	15	20	V
LED Off Voltage	V_F	0		0.8	V

ELECTRICAL CHARACTERISTICS (T_A = –40 to +100°C, V_{CC} = 15 V, unless otherwise specified)

Parameter		Symbol	Conditions	MIN.	TYP.*1	MAX.	Unit
Diode	Forward Voltage	V_F	I_F = 10 mA	1.3	1.65	2.1	V
	Reverse Current	I_R	V_R = 3 V			200	μA
	Terminal Capacitance	C_t	V = 0 V, f = 1 MHz, T_A = 25°C		30		pF
Detector	Low Level Output Voltage	V_{OL}	I_F = 10 mA, I_{OL} = 2.4 mA		0.13	0.6	V
	High Level Output Current	I_{OH}	V_{CC} = V_O = 20 V, V_F = 0.8 V		0.01	50	μA
	High Level Supply Current	I_{CCH}	V_{CC} = 20 V, V_F = 0.8 V, V_O = open		0.6	1.3	mA
	Low Level Supply Current	I_{CCL}	V_{CC} = 20 V, I_F = 10 mA, V_O = open		0.6	1.3	mA
Coupled	Threshold Input Current (H → L)	I_{FHL}	V_O = 0.8 V, I_O = 0.75 mA		1.5	5.0	mA
	Current Transfer Ratio (I_C/I_F)	CTR	I_F = 10 mA, V_O = 0.6 V	44	110		%
	Isolation Resistance	R_{I-O}	V_{I-O} = 1 kV_{DC}, RH = 40 to 60%, T_A = 25°C	10^{11}			Ω
	Isolation Capacitance	C_{I-O}	V = 0 V, f = 1 MHz, TA = 25°C		0.6		pF
	Propagation Delay Time (H → L)*2	t_{PHL}	I_F = 10 mA, R_L = 20 kΩ, C_L = 100 pF, V_{THHL} = 1.5 V, V_{THLH} = 2.0 V		250	500	ns
	Propagation Delay Time (L → H)*2	t_{PLH}			520	750	
	Maximum Propagation Delays	t_{PLH}–t_{PHL}		–200	270	650	
	Pulse Width Distortion (PWD)*2	$\lvert t_{PHL}-t_{PLH} \rvert$			270	650	
	Common Mode Transient Immunity at High Level Output*3	C_{MH}	T_A = 25°C, I_F = 0 mA, V_O > 3.0 V, V_{CM} = 1.5 kV, RL = 20 kΩ, C_L = 100 pF	15			kV/μs
	Common Mode Transient Immunity at Low Level Output*3	C_{ML}	T_A = 25°C, I_F = 10 mA, V_O < 1.0 V, V_{CM} = 1.5 kV, R_L = 20 kΩ, C_L = 100 pF	15			kV/μs

Notes*: 1. Typical values at T_A = 25°C.

2. Test circuit for propagation delay time

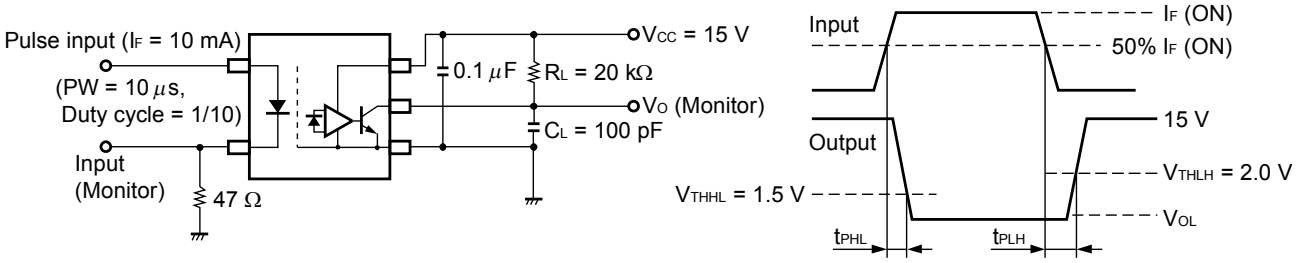

C_L includes probe and stray wiring capacitance.

3. Test circuit for common mode transient immunity

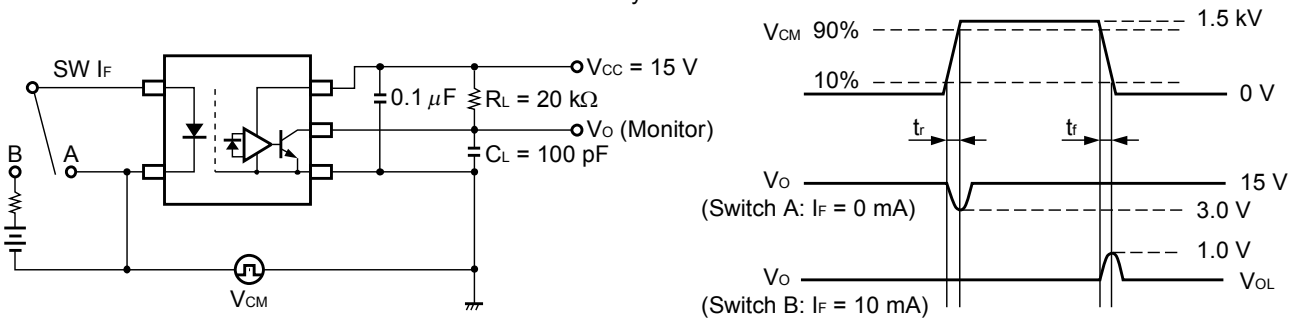

C_L includes probe and stray wiring capacitance.

USAGE CAUTIONS

1. This product is weak for static electricity by designed with high-speed integrated circuit so protect against static electricity when handling.
2. By-pass capacitor of 0.1 µF is used between V_{CC} and GND near device. Also, ensure that the distance between the leads of the photocoupler and capacitor is no more than 10 mm.
3. Avoid storage at a high temperature and high humidity.

TYPICAL CHARACTERISTICS (T_A = 25°C unless otherwise specified)

SUPPLY CURRENT vs. AMBIENT TEMPERATURE

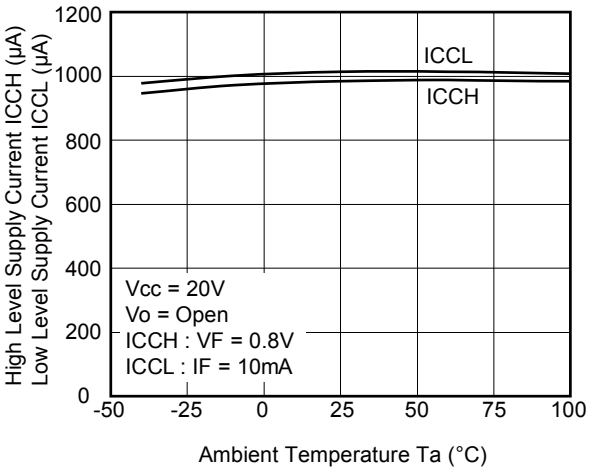

THRESHOLD INPUT CURRENT vs. AMBIENT TEMPERATURE

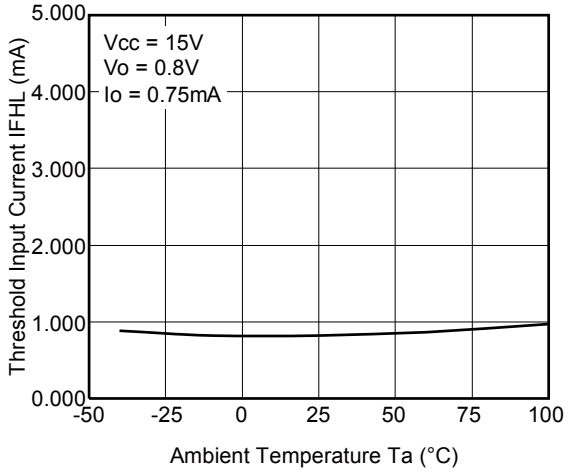

LOW LEVEL OUTPUT VOLTAGE vs. AMBIENT TEMPERATURE

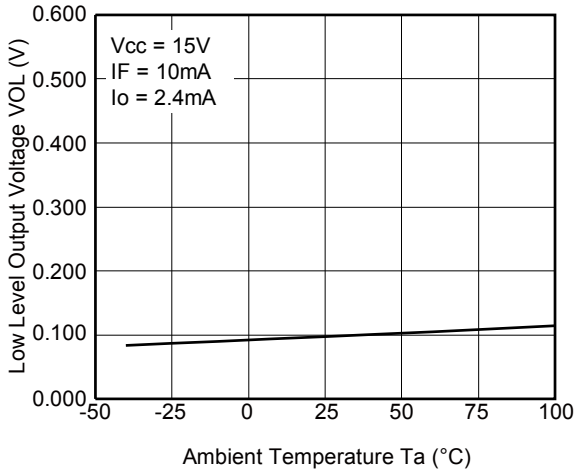

OUTPUT CURRENT vs. FORWARD CURRENT

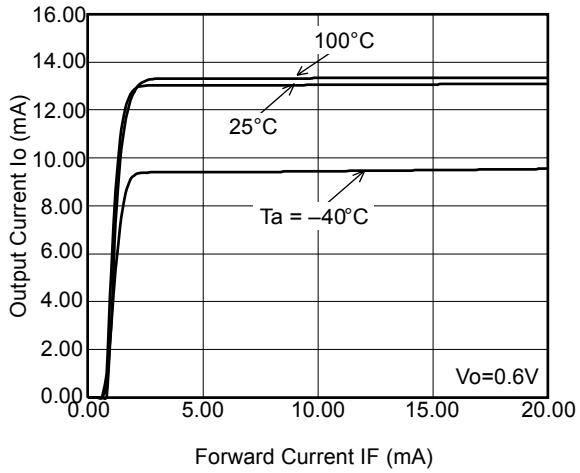

OUTPUT CURRENT vs. AMBIENT TEMPERATURE

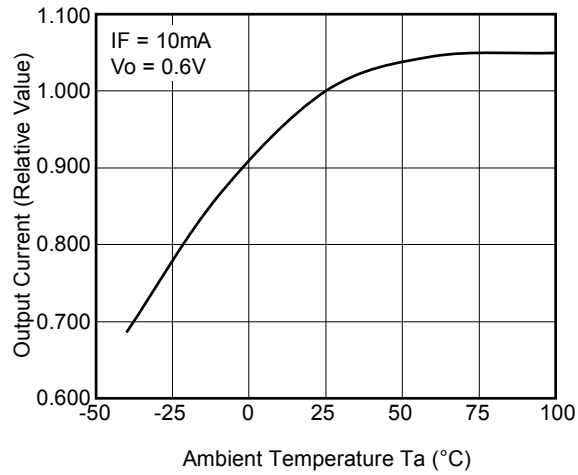

PROPAGATION DELAY TIME, MAXIMUM PROPAGATION DELAYS vs. FORWARD CURRENT

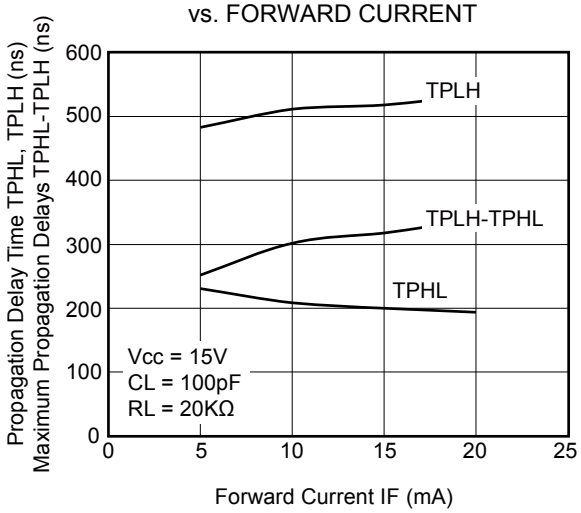

PROPAGATION DELAY TIME,
MAXIMUM PROPAGATION DELAYS
vs. SUPPLY VOLTAGE

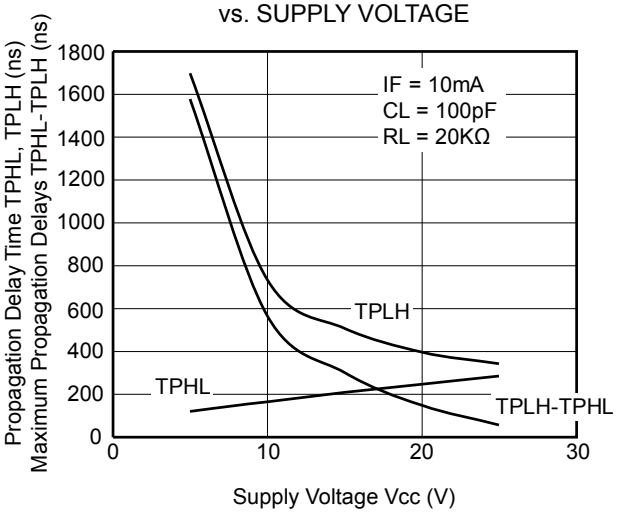

PROPAGATION DELAY TIME,
PULSE WIDTH DISTORTION
vs. AMBIENT TEMPERATURE

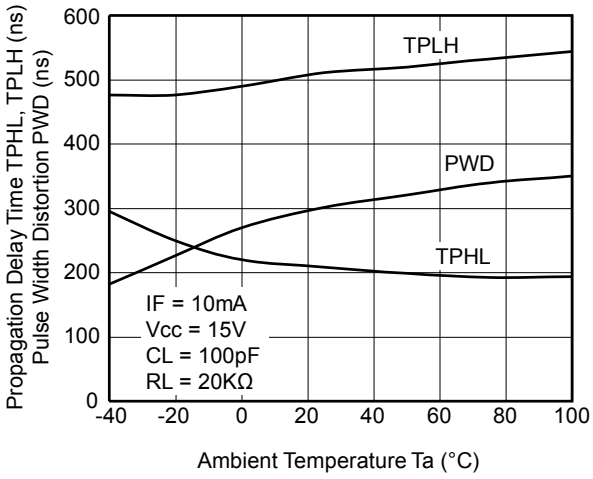

PROPAGATION DELAY TIME
vs. LOAD CAPACITANCE

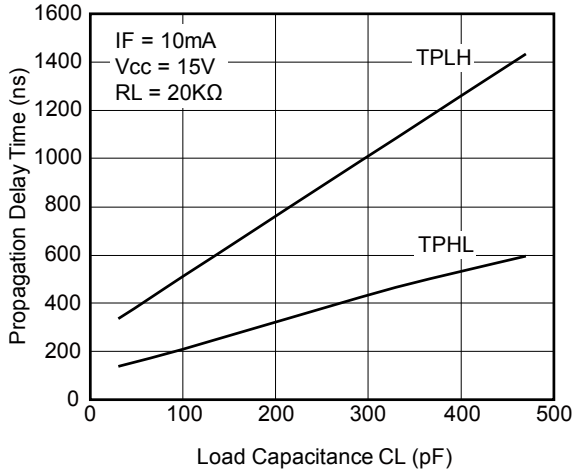

PROPAGATION DELAY TIME,
MAXIMUM PROPAGATION DELAYS
vs. LOAD RESISTANCE

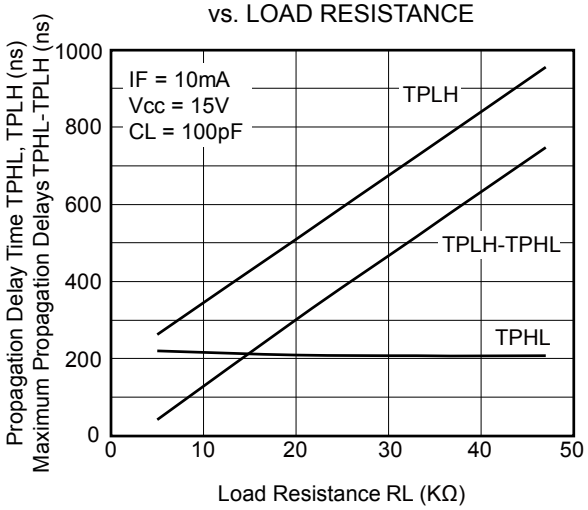

PROPAGATION DELAY TIME,
MAXIMUM PROPAGATION DELAYS
vs. LOAD RESISTANCE

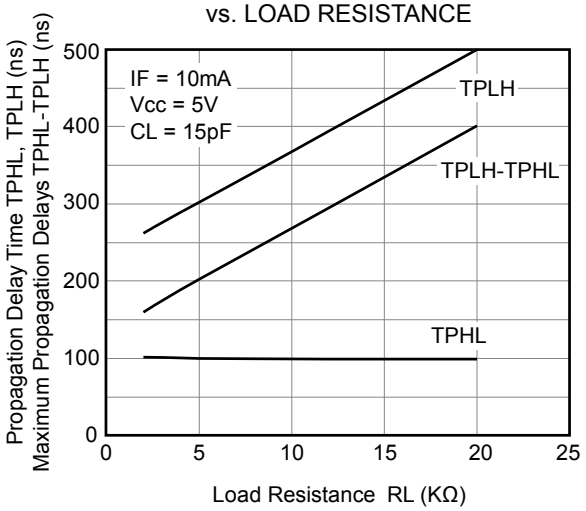

TAPING SPECIFICATIONS (UNIT: mm)

Outline and Dimensions (Tape)

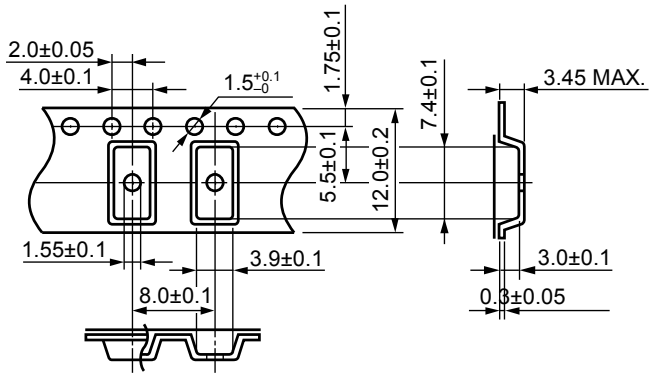

Tape Direction

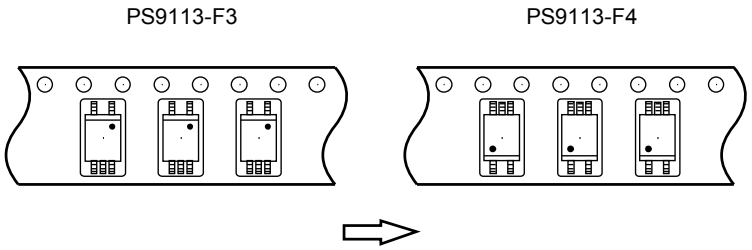

Outline and Dimensions (Reel)

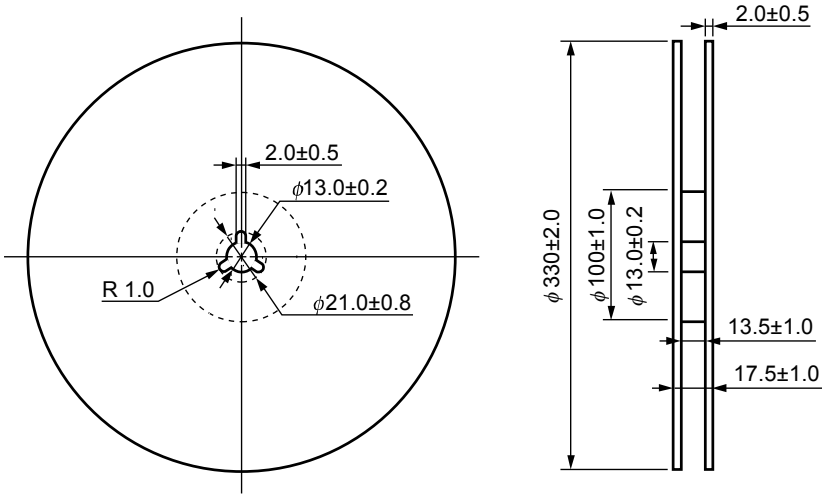

Packing: 2 500 pcs/reel

RECOMMENDED MOUNT PAD DIMENSIONS (UNIT: mm)

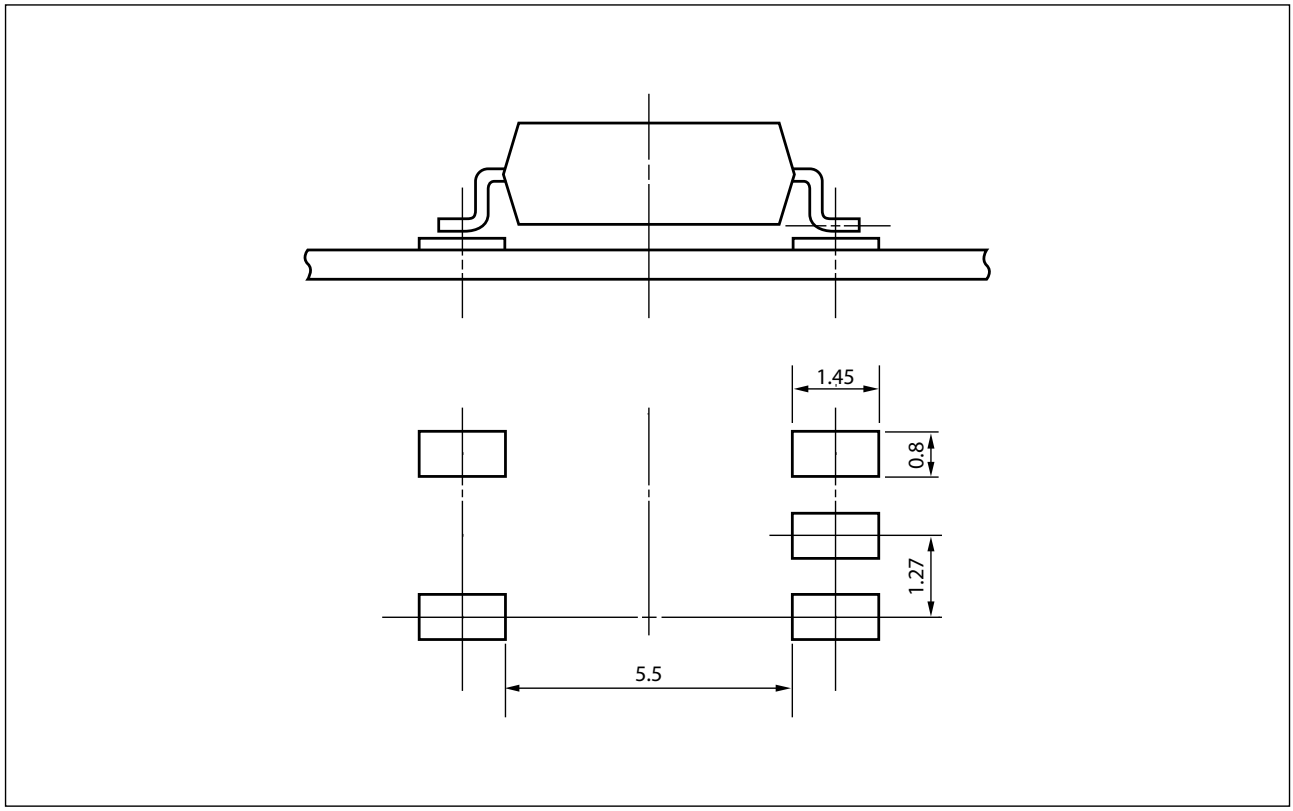

NOTES ON HANDLING

1. Recommended soldering conditions

(1) Infrared reflow soldering

- Peak reflow temperature — 260°C or below (package surface temperature)
- Time of peak reflow temperature — 10 seconds or less
- Time of temperature higher than 220°C — 60 seconds or less
- Time to preheat temperature from 120 to 180°C — 120±30 s
- Number of reflows — Three
- Flux — Rosin flux containing small amount of chlorine (The flux with a maximum chlorine content of 0.2 Wt% is recommended.)

Recommended Temperature Profile of Infrared Reflow

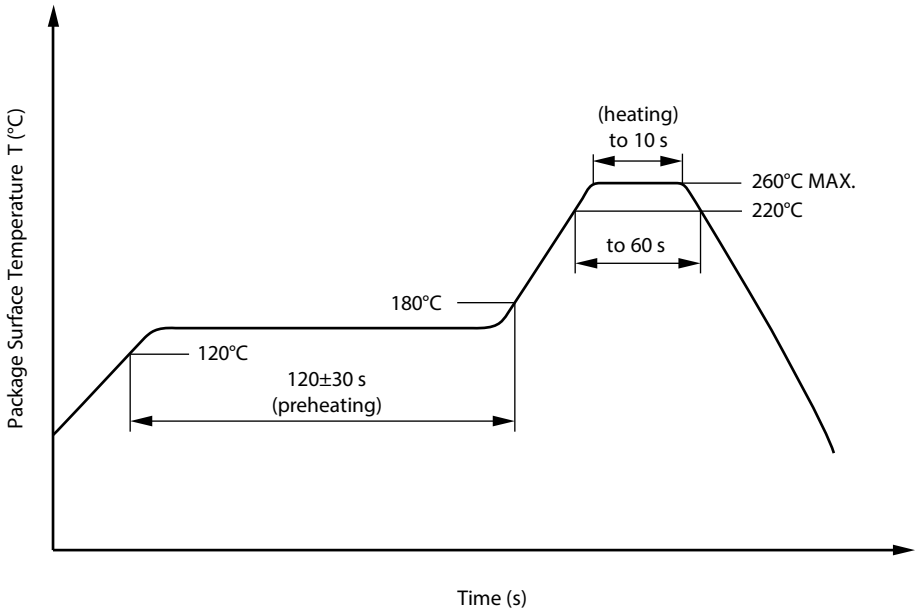

(2) Wave soldering

- Temperature — 260°C or below (molten solder temperature)
- Time — 10 seconds or less
- Preheating conditions — 120°C or below (package surface temperature)
- Number of times — One (Allowed to be dipped in solder including plastic mold portion.)
- Flux — Rosin flux containing small amount of chlorine (The flux with a maximum chlorine content of 0.2 Wt% is recommended.)

(3) Soldering by Soldering Iron

- Peak Temperature (lead part temperature) — 350°C or below
- Time (each pins) — 3 seconds or less
- Flux — Rosin flux containing small amount of chlorine (The flux with a maximum chlorine content of 0.2 Wt% is recommended.)

(a) Soldering of leads should be made at the point 1.5 to 2.0 mm from the root of the lead

(b) Please be sure that the temperature of the package would not be heated over 100°C

(4) Cautions

- Fluxes
  Avoid removing the residual flux with freon-based and chlorine-based cleaning solvent.

2. Cautions regarding noise

Be aware that when voltage is applied suddenly between the photocoupler's input and output or between collector-emitters at startup, the output transistor may enter the on state, even if the voltage is within the absolute maximum ratings.

USAGE CAUTIONS

1. Protect against static electricity when handling.

2. Avoid storage at a high temperature and high humidity.

SPECIFICATION OF VDE MARKS LICENSE DOCUMENT

Parameter	Symbol	Speck	Unit
Climatic test class (IEC 60068-1/DIN EN 60068-1)		40/100/21	
Dielectric strength maximum operating isolation voltage Test voltage (partial discharge test, procedure a for type test and random test) U_{pr} = 1.6 × U_{IORM}, Pd < 5 pC	 U_{IORM} U_{pr}	 707 1131	 V_{peak} V_{peak}
Test voltage (partial discharge test, procedure b for all devices) U_{pr} = 1.875 × U_{IORM}, Pd < 5 pC	U_{pr}	1 326	V_{peak}
Highest permissible overvoltage	U_{TR}	6 000	V_{peak}
Degree of pollution (DIN EN 60664-1 VDE 0110 Part 1)		2	
Comparative tracking index ((IEC 60112/DIN EN 60112 (VDE 0303 Part 11))	CTI	175	
Material group (DIN EN 60664-1 VDE 0110 Part 1)		III a	
Storage temperature range	Tstg	–55 to +125	°C
Operating temperature range	T_A	–40 to +100	°C
Isolation resistance, minimum value V_{IO} = 500 V dc at T_A = 25°C V_{IO} = 500 V dc at T_A MAX. at least 100°C	 Ris MIN. Ris MIN.	 1012 1011	 Ω Ω
Safety maximum ratings (maximum permissible in case of fault, see thermal derating curve) Package temperature Current (input current I_F, Psi = 0) Power (output or total power dissipation) Isolation resistance V_{IO} = 500 V dc at T_A = Tsi	 Tsi Isi Psi Ris MIN.	 150 200 300 109	 °C mA mW Ω

Caution GaAs Products	This product uses gallium arsenide (GaAs). GaAs vapor and powder are hazardous to human health if inhaled or ingested, so please observe the following points. • Follow related laws and ordinances when disposing of the product. If there are no applicable laws and/or ordinances, dispose of the product as recommended below. 1. Commission a disposal company able to (with a license to) collect, transport and dispose of materials that contain arsenic and other such industrial waste materials. 2. Exclude the product from general industrial waste and household garbage, and ensure that the product is controlled (as industrial waste subject to special control) up until final disposal. • Do not burn, destroy, cut, crush, or chemically dissolve the product. • Do not lick the product or i any way allow it to enter the mouth.

All trademarks and registered trademarks are the property of their respective owners.

NOTICE

1. Descriptions of circuits, software and other related information in this document are provided only to illustrate the operation of semiconductor products and application examples. You are fully responsible for the incorporation of these circuits, software, and information in the design of your equipment. California Eastern Laboratories and Renesas Electronics assumes no responsibility for any losses incurred by you or third parties arising from the use of these circuits, software, or information.
2. California Eastern Laboratories has used reasonable care in preparing the information included in this document, but California Eastern Laboratories does not warrant that such information is error free. California Eastern Laboratories and Renesas Electronics assumes no liability whatsoever for any damages incurred by you resulting from errors in or omissions from the information included herein.
3. California Eastern Laboratories and Renesas Electronics do not assume any liability for infringement of patents, copyrights, or other intellectual property rights of third parties by or arising from the use of Renesas Electronics products or technical information described in this document. No license, express, implied or otherwise, is granted hereby under any patents, copyrights or other intellectual property rights of California Eastern Laboratories or Renesas Electronics or others.
4. You should not alter, modify, copy, or otherwise misappropriate any Renesas Electronics product, whether in whole or in part. California Eastern Laboratories and Renesas Electronics assume no responsibility for any losses incurred by you or third parties arising from such alteration, modification, copy or otherwise misappropriation of Renesas Electronics product.
5. Renesas Electronics products are classified according to the following two quality grades: “Standard” and “High Quality”. The recommended applications for each Renesas Electronics product depends on the product’s quality grade, as indicated below. “Standard”: Computers; office equipment; communications equipment; test and measurement equipment; audio and visual equipment; home electronic appliances; machine tools; personal electronic equipment; and industrial robots etc. “High Quality”: Transportation equipment (automobiles, trains, ships, etc.); traffic control systems; anti-disaster systems; anti-crime systems; and safety equipment etc. Renesas Electronics products are neither intended nor authorized for use in products or systems that may pose a direct threat to human life or bodily injury (artificial life support devices or systems, surgical implantations etc.), or may cause serious property damages (nuclear reactor control systems, military equipment etc.). You must check the quality grade of each Renesas Electronics product before using it in a particular application. You may not use any Renesas Electronics product for any application for which it is not intended. California Eastern Laboratories and Renesas Electronics shall not be in any way liable for any damages or losses incurred by you or third parties arising from the use of any Renesas Electronics product for which the product is not intended by California Eastern Laboratories or Renesas Electronics.
6. You should use the Renesas Electronics products described in this document within the range specified by California Eastern Laboratories, especially with respect to the maximum rating, operating supply voltage range, movement power voltage range, heat radiation characteristics, installation and other product characteristics. California Eastern Laboratories shall have no liability for malfunctions or damages arising out of the use of Renesas Electronics products beyond such specified ranges.
7. Although Renesas Electronics endeavors to improve the quality and reliability of its products, semiconductor products have specific characteristics such as the occurrence of failure at a certain rate and malfunctions under certain use conditions. Further, Renesas Electronics products are not subject to radiation resistance design. Please be sure to implement safety measures to guard them against the possibility of physical injury, and injury or damage caused by fire in the event of the failure of a Renesas Electronics product, such as safety design for hardware and software including but not limited to redundancy, fire control and malfunction prevention, appropriate treatment for aging degradation or any other appropriate measures. Because the evaluation of microcomputer software alone is very difficult, please evaluate the safety of the final products or systems manufactured by you.
8. Please contact a California Eastern Laboratories sales office for details as to environmental matters such as the environmental compatibility of each Renesas Electronics product. Please use Renesas Electronics products in compliance with all applicable laws and regulations that regulate the inclusion or use of controlled substances, including without limitation, the EU RoHS Directive. California Eastern Laboratories and Renesas Electronics assume no liability for damages or losses occurring as a result of your noncompliance with applicable laws and regulations.
9. Renesas Electronics products and technology may not be used for or incorporated into any products or systems whose manufacture, use, or sale is prohibited under any applicable domestic or foreign laws or regulations. You should not use Renesas Electronics products or technology described in this document for any purpose relating to military applications or use by the military, including but not limited to the development of weapons of mass destruction. When exporting the Renesas Electronics products or technology described in this document, you should comply with the applicable export control laws and regulations and follow the procedures required by such laws and regulations.
10. It is the responsibility of the buyer or distributor of California Eastern Laboratories, who distributes, disposes of, or otherwise places the Renesas Electronics product with a third party, to notify such third party in advance of the contents and conditions set forth in this document, California Eastern Laboratories and Renesas Electronics assume no responsibility for any losses incurred by you or third parties as a result of unauthorized use of Renesas Electronics products.
11. This document may not be reproduced or duplicated in any form, in whole or in part, without prior written consent of California Eastern Laboratories.
12. Please contact a California Eastern Laboratories sales office if you have any questions regarding the information contained in this document or Renesas Electronics products, or if you have any other inquiries.

NOTE 1: “Renesas Electronics” as used in this document means Renesas Electronics Corporation and also includes its majority-owned subsidiaries.
NOTE 2: “Renesas Electronics product(s)” means any product developed or manufactured by or for Renesas Electronics.
NOTE 3: Products and product information are subject to change without notice.

CEL Headquarters • 4590 Patrick Henry Drive, Santa Clara, CA 95054 • Phone (408) 919-2500 • www.cel.com

For a complete list of sales offices, representatives and distributors,
Please visit our website: **www.cel.com/contactus**