LOW VOLTAGE DETECTOR with SENSE pin

NO.EA-261-200807

Notice

R3117xxx3A/C and R3117Qxx4A/C Series may cause the malfunction (miss detection), in the case of its V_{DD} pin voltage changes very rapidly. Please check the details in the page 11.

OUTLINE

The R3117x series are CMOS-based voltage detector ICs with high detector threshold accuracy and ultra-low supply current, which can be operated at an extremely low voltage and is used for system reset as an example.

Each of these ICs consists of a voltage reference unit, a comparator, resistors for detector threshold setting, an output driver and a hysteresis circuit. The detector threshold is fixed with high accuracy internally and does not require any adjustment.

The tolerance of the detector threshold is ±15mV ($-V_{DET} \leqq 1.5V$) or ±1.0% ($1.5V < -V_{DET}$). Since the sense pin is separated from the V_{DD} pin of the IC, therefore, even if the sense pin voltage becomes to 0V, the output voltage keeps its "L" level.

Two output types, Nch open drain type and CMOS type are available.

Three types of packages, SOT-23-5, SC-88A, and DFN(PL)1010-4 are available.

FEATURES*

- Supply Current ..... Typ. 0.29μA (V_{DD}=6.0V)
  Consumption current through SENSE pin is not included.
- Operating Voltage Range ..... 1.0V to 6.0V (-40°C ≦ Topt ≦ 105°C)
- Detector Threshold Range ..... 0.7V to 5.0V (0.1V steps)
  (For other voltages, please refer to MARK INFORMATIONS.)
- Accuracy Detector Threshold ..... ±1.0% ($-V_{DET} \geqq 1.6V$), ±15mV ($-V_{DET} < 1.6V$)
- Temperature-Drift Coefficient of Detector Threshold ..... Typ. ±30ppm/°C
- Output Types ..... Nch Open Drain and CMOS
- Packages ..... DFN(PL)1010-4, SC-88A, SOT-23-5

* Topt=25°C, unless otherwise noted.

APPLICATIONS

- CPU and Logic Circuit Reset
- Battery Checker
- Window Comparator
- Wave Shaping Circuit
- Battery Back-up Circuit
- Power Failure Detector

BLOCK DIAGRAMS

Nch Open Drain Output (R3117xxxxA)

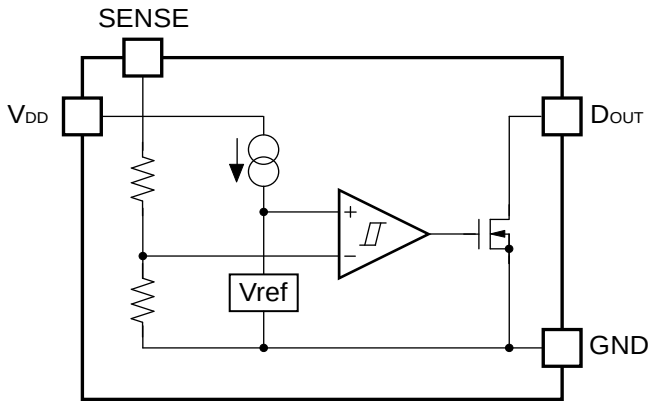

CMOS Output (R3117xxxxC)

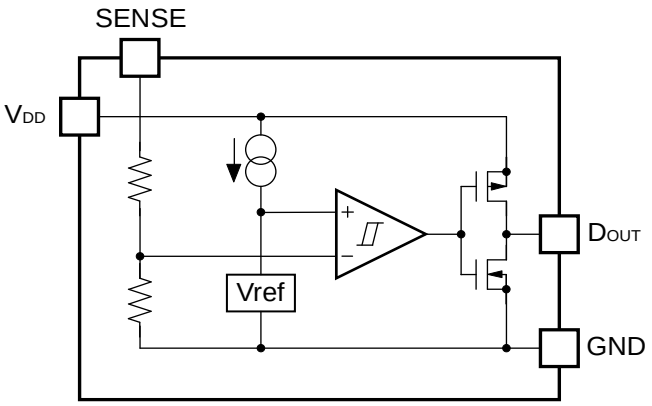

SELECTION GUIDE

The package type, the detector threshold, the output type and the taping type for the ICs can be selected at the users' request.

Product Name	Package	Quantity per Reel	Pb Free	Halogen Free
R3117Kxx3∗-TR	DFN(PL)1010-4	10,000 pcs	Yes	Yes
R3117Qxx4∗-TR-FE	SC-88A	3,000 pcs	Yes	Yes
R3117Nxx3∗-TR-FE	SOT-23-5	3,000 pcs	Yes	Yes

xx: The detector threshold can be designated in the range from 0.7V(07) to 5.0V(50) in 0.1V steps.
(For other voltages, please refer to MARK INFORMATIONS.)

∗ : Designation of Output Type
(A) Nch Open Drain
(C) CMOS

PIN CONFIGURATIONS

● **DFN（PL）1010-4*1**

Top View

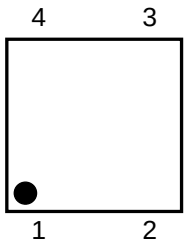

Bottom View

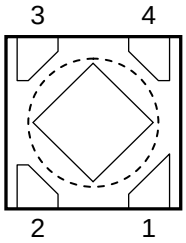

● **SC-88A**

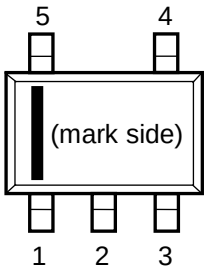

● **SOT-23-5**

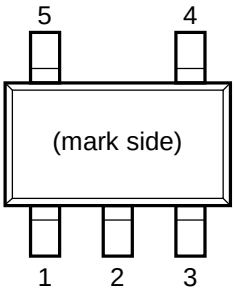

PIN DESCRIPTIONS

● **DFN(PL)1010-4*1**

Pin No.	Symbol	Description
1	D_{OUT}	Output Pin ("L" at detection)
2	SENSE	Voltage Detector Voltage Sense Pin
3	GND	Ground Pin
4	V_{DD}	Input Pin

∗1) Tab is GND level. (They are connected to the reverse side of this IC.)
The tab is better to be connected to the GND, but leaving it open is also acceptable.

● **SC-88A**

Pin No.	Symbol	Description
1	V_{DD}	Input Pin
2	NC	No Connection*2
3	GND	Ground Pin
4	SENSE	Voltage Detector Voltage Sense Pin
5	D_{OUT}	Output Pin ("L" at detection)

∗2) In terms of NC pin of SC-88A, connect it to the GND or use it as open.

● **SOT-23-5**

Pin No.	Symbol	Description
1	D_{OUT}	Output Pin ("L" at detection)
2	V_{DD}	Input Pin
3	GND	Ground Pin
4	NC	No Connection
5	SENSE	Voltage Detector Voltage Sense Pin

ABSOLUTE MAXIMUM RATINGS

Symbol	Item	Rating	Unit
V_{DD}	Supply Voltage	7.0	V
V_{SENSE}	SENSE Pin Voltage	7.0	V
V_{OUT}	Output Voltage (Nch Open Drain Output)	V_{SS}–0.3 to 7.0	V
	Output Voltage (CMOS Output)	V_{SS}–0.3 to V_{DD}+0.3	
I_{OUT}	Output Current	20	mA
P_D	Power Dissipation (DFN(PL)1010-4)*	400	mW
	Power Dissipation (SC-88A)*	380	
	Power Dissipation (SOT-23-5)*	420	
Topt	Operating Temperature Range	–40 to 105	°C
Tstg	Storage Temperature Range	–55 to 125	°C

*) For Power Dissipation, please refer to PACKAGE INFORMATION.

ABSOLUTE MAXIMUM RATINGS

Electronic and mechanical stress momentarily exceeded absolute maximum ratings may cause the permanent damages and may degrade the life time and safety for both device and system using the device in the field. The functional operation at or over these absolute maximum ratings is not assured.

ELECTRICAL CHARACTERISTICS

- **R3117xxxxA/C** ☐ **values indicate −40°C ≦ Topt ≦ 105°C, unless otherwise noted.** Topt=25°C

Symbol	Item	Conditions		Min.	Typ.	Max.	Unit
$-V_{DET}$	Detector Threshold (Topt=25°C)	0.7V ≦ $-V_{DET}$<1.6V	1.0V ≦ V_{DD} ≦ 5.25V	$-V_{DET}$-15		$-V_{DET}$+15	mV
			5.25V < V_{DD} ≦ 6.0V	$-V_{DET}$-11		$-V_{DET}$+24	
		1.6V ≦ $-V_{DET}$ ≦ 5.0V	1.0V ≦ V_{DD} ≦ 5.25V	$-V_{DET}$ ×0.99		$-V_{DET}$ ×1.01	V
			5.25V < V_{DD} ≦ 6.0V	$-V_{DET}$ ×0.9925		$-V_{DET}$ ×1.016	
$-V_{DET}$	Detector Threshold (-40°C ≦ Topt ≦ 105°C)	0.7V ≦ $-V_{DET}$<1.6V	1.0V ≦ V_{DD} ≦ 5.25V	$-V_{DET}$-30		$-V_{DET}$+30	mV
			5.25V < V_{DD} ≦ 6.0V	$-V_{DET}$-26		$-V_{DET}$+39	
		1.6V ≦ $-V_{DET}$ ≦ 5.0V	1.0V ≦ V_{DD} ≦ 5.25V	$-V_{DET}$ ×0.98		$-V_{DET}$ ×1.02	V
			5.25V < V_{DD} ≦ 6.0V	$-V_{DET}$ ×0.9825		$-V_{DET}$ ×1.026	
V_{HYS}	Detector Threshold Hysteresis	V_{DD}=1.0V to 6.0V		$-V_{DET}$ ×0.04		$-V_{DET}$ ×0.07	V
I_{SS}	Supply Current*1	V_{SENSE}=$-V_{DET}$-0.1V			0.31	1.47	µA
		V_{SENSE}=$-V_{DET}$×1.1			0.29	1.25	

Symbol	Item	Conditions			Min.	Typ.	Max.	Unit
R_{SENSE}	Sense Resistor	$-V_{DET} < 1.5V$			6	25		MΩ
		$1.5V \leqq -V_{DET} < 4.7V$			5	40		
		$4.7V \leqq -V_{DET}$			10	40		
V_{DD}	Operating Voltage	Topt=25°C			1.0		6.0	
		-40°C ≦ Topt ≦ 105°C			1.0		6.0	V
V_{DDL}	Minimum Operating Voltage*2	Topt=25°C					0.50	V
		-40°C ≦ Topt ≦ 105°C					0.55	
I_{OUT}	Output Current (Driver Output Pin)	Nch	V_{DD}=0.6V, V_{DS}=0.05V		7			μA
			$-V_{DET} < 1.1V$	V_{DD}=0.6V V_{DS}=0.5V	0.020			mA
			$1.1V \leqq -V_{DET} < 1.6V$	V_{DD}=1.0V V_{DS}=0.5V	0.400			
			$1.6V \leqq -V_{DET} < 3.1V$	V_{DD}=1.5V V_{DS}=0.5V	1.000			
			$3.1V \leqq -V_{DET}$	V_{DD}=3.0V V_{DS}=0.5V	2.400			
		Pch*3	$-V_{DET} < 4.0V$	V_{DD}=4.5V V_{DS}=2.1V	0.650			mA
			$4.0V \leqq -V_{DET}$	V_{DD}=6.0V V_{DS}=2.1V	0.900			
I_{LEAK}	Nch Driver Leakage Current*4	V_{DD}=6.0V, V_{DS}=7.0V					140	nA
$\Delta-V_{DET}/\Delta Topt$	Detector Threshold Temperature Coefficient	-40°C ≦ Topt ≦ 105°C				±30		ppm /°C
t_{PHL}	Detector Output Delay Time*5	V_{DD}=5V	$-V_{DET} < 1.5V$			80		μs
			$1.5V \leqq -V_{DET}$			40		
t_{PLH}	Release Output Delay Time*5	V_{DD}=5V	$-V_{DET} < 4.5V$			50		μs
			$4.5V \leqq -V_{DET}$			100		

All of unit are tested and specified under load conditions such that Topt=25°C except for Detector Threshold Temperature Coefficient, Detector Output Delay Time and Release Output Delay Time.

*1: Consumption current through SENSE pin is not included.

*2: In case that the V_{DD} pin and SENSE pin are connected and the value shows the minimum supply voltage (V_{DD}) when the output voltage at detector threshold can be maintained as 0.1V or less. (In case of Nch open drain type, pull-up resistor is 470kΩ and pull-up voltage is set at 5V for testing.) If V_{DD} is high enough, down to 0V is acceptable for SENSE pin.

*3: In case of CMOS type

*4: In case of Nch Open Drain type

*5: In the case of CMOS output type: Time interval from forcing pulsive 6.0V to $-V_{DET}$-2.0V or 0V, or from forcing 0V to $-V_{DET}$+2.0V or 6.0V to SENSE pin, to when the output voltage will reach V_{DD}/2.

In the case of Nch Open drain output type: Output pin is pulled up to 5V with 470kΩ and time interval from forcing 6.0V to $-V_{DET}$-2.0V or 0V, or forcing pulsive 0V to $-V_{DET}$+2.0V or 6.0V to when the output voltage reaches up to 2.5V.

RECOMMENDED OPERATING CONDITIONS (ELECTRICAL CHARACTERISTICS)

All of electronic equipment should be designed that the mounted semiconductor devices operate within the recommended operating conditions. The semiconductor devices cannot operate normally over the recommended operating conditions, even if when they are used over such conditions by momentary electronic noise or surge. And the semiconductor devices may receive serious damage when they continue to operate over the recommended operating conditions.

ELECTRICAL CHARACTERISTICS BY DETECTOR THRESHOLD

- **R3117x07xA/C to R3117x50xA/C**

Bold values are checked and guaranteed by design engineering at −40°C ≦ Topt ≦ 105°C, unless otherwise noted.

Topt=25°C

Part Number	Detector Threshold 1.0V ≦ V_{DD} ≦ 5.25V		Detector Threshold 1.0V ≦ V_{DD} ≦ 5.25V		Detector Threshold 5.25V < V_{DD} ≦ 6.0V		Detector Threshold 5.25V < V_{DD} ≦ 6.0V		Detector Threshold Hysteresis	
	-V_{DET} [V]		-V_{DET} [V]		-V_{DET} [V]		-V_{DET} [V]		V_{HYS} [V]	
	Min.	Max.	Min.	Max.	Min.	Max.	Min.	Max.	Min.	Max.
R3117x07xA/C	0.6850	0.7150	**0.6700**	**0.7300**	0.6890	0.7240	**0.6740**	**0.7390**	**0.028**	**0.049**
R3117x08xA/C	0.7850	0.8150	**0.7700**	**0.8300**	0.7890	0.8240	**0.7740**	**0.8390**	**0.032**	**0.056**
R3117x09xA/C	0.8850	0.9150	**0.8700**	**0.9300**	0.8890	0.9240	**0.8740**	**0.9390**	**0.036**	**0.063**
R3117x10xA/C	0.9850	1.0150	**0.9700**	**1.0300**	0.9890	1.0240	**0.9740**	**1.0390**	**0.040**	**0.070**
R3117x11xA/C	1.0850	1.1150	**1.0700**	**1.1300**	1.0890	1.1240	**1.0740**	**1.1390**	**0.044**	**0.077**
R3117x12xA/C	1.1850	1.2150	**1.1700**	**1.2300**	1.1890	1.2240	**1.1740**	**1.2390**	**0.048**	**0.084**
R3117x13xA/C	1.2850	1.3150	**1.2700**	**1.3300**	1.2890	1.3240	**1.2740**	**1.3390**	**0.052**	**0.091**
R3117x14xA/C	1.3850	1.4150	**1.3700**	**1.4300**	1.3890	1.4240	**1.3740**	**1.4390**	**0.056**	**0.098**
R3117x15xA/C	1.4850	1.5150	**1.4700**	**1.5300**	1.4890	1.5240	**1.4740**	**1.5390**	**0.060**	**0.105**
R3117x16xA/C	1.5840	1.6160	**1.5680**	**1.6320**	1.5880	1.6256	**1.5720**	**1.6416**	**0.064**	**0.112**
R3117x17xA/C	1.6830	1.7170	**1.6660**	**1.7340**	1.6872	1.7272	**1.6702**	**1.7442**	**0.068**	**0.119**
R3117x18xA/C	1.7820	1.8180	**1.7640**	**1.8360**	1.7865	1.8288	**1.7685**	**1.8468**	**0.072**	**0.126**
R3117x19xA/C	1.8810	1.9190	**1.8620**	**1.9380**	1.8857	1.9304	**1.8667**	**1.9494**	**0.076**	**0.133**
R3117x20xA/C	1.9800	2.0200	**1.9600**	**2.0400**	1.9850	2.0320	**1.9650**	**2.0520**	**0.080**	**0.140**
R3117x21xA/C	2.0790	2.1210	**2.0580**	**2.1420**	2.0842	2.1336	**2.0632**	**2.1546**	**0.084**	**0.147**
R3117x22xA/C	2.1780	2.2220	**2.1560**	**2.2440**	2.1835	2.2352	**2.1615**	**2.2572**	**0.088**	**0.154**
R3117x23xA/C	2.2770	2.3230	**2.2540**	**2.3460**	2.2827	2.3368	**2.2597**	**2.3598**	**0.092**	**0.161**
R3117x24xA/C	2.3760	2.4240	**2.3520**	**2.4480**	2.3820	2.4384	**2.3580**	**2.4624**	**0.096**	**0.168**
R3117x25xA/C	2.4750	2.5250	**2.4500**	**2.5500**	2.4812	2.5400	**2.4562**	**2.5650**	**0.100**	**0.175**
R3117x26xA/C	2.5740	2.6260	**2.5480**	**2.6520**	2.5805	2.6416	**2.5545**	**2.6676**	**0.104**	**0.182**
R3117x27xA/C	2.6730	2.7270	**2.6460**	**2.7540**	2.6797	2.7432	**2.6527**	**2.7702**	**0.108**	**0.189**
R3117x28xA/C	2.7720	2.8280	**2.7440**	**2.8560**	2.7790	2.8448	**2.7510**	**2.8728**	**0.112**	**0.196**
R3117x29xA/C	2.8710	2.9290	**2.8420**	**2.9580**	2.8782	2.9464	**2.8492**	**2.9754**	**0.116**	**0.203**
R3117x30xA/C	2.9700	3.0300	**2.9400**	**3.0600**	2.9775	3.0480	**2.9475**	**3.0780**	**0.120**	**0.210**
R3117x31xA/C	3.0690	3.1310	**3.0380**	**3.1620**	3.0767	3.1496	**3.0457**	**3.1806**	**0.124**	**0.217**
R3117x32xA/C	3.1680	3.2320	**3.1360**	**3.2640**	3.1760	3.2512	**3.1440**	**3.2832**	**0.128**	**0.224**
R3117x33xA/C	3.2670	3.3330	**3.2340**	**3.3660**	3.2752	3.3528	**3.2422**	**3.3858**	**0.132**	**0.231**
R3117x34xA/C	3.3660	3.4340	**3.3320**	**3.4680**	3.3745	3.4544	**3.3405**	**3.4884**	**0.136**	**0.238**
R3117x35xA/C	3.4650	3.5350	**3.4300**	**3.5700**	3.4737	3.5560	**3.4387**	**3.5910**	**0.140**	**0.245**
R3117x36xA/C	3.5640	3.6360	**3.5280**	**3.6720**	3.5730	3.6576	**3.5370**	**3.6936**	**0.144**	**0.252**
R3117x37xA/C	3.6630	3.7370	**3.6260**	**3.7740**	3.6722	3.7592	**3.6352**	**3.7962**	**0.148**	**0.259**
R3117x38xA/C	3.7620	3.8380	**3.7240**	**3.8760**	3.7715	3.8608	**3.7335**	**3.8988**	**0.152**	**0.266**
R3117x39xA/C	3.8610	3.9390	**3.8220**	**3.9780**	3.8707	3.9624	**3.8317**	**4.0014**	**0.156**	**0.273**
R3117x40xA/C	3.9600	4.0400	**3.9200**	**4.0800**	3.9700	4.0640	**3.9300**	**4.1040**	**0.160**	**0.280**
R3117x41xA/C	4.0590	4.1410	**4.0180**	**4.1820**	4.0692	4.1656	**4.0282**	**4.2066**	**0.164**	**0.287**
R3117x42xA/C	4.1580	4.2420	**4.1160**	**4.2840**	4.1685	4.2672	**4.1265**	**4.3092**	**0.168**	**0.294**
R3117x43xA/C	4.2570	4.3430	**4.2140**	**4.3860**	4.2677	4.3688	**4.2247**	**4.4118**	**0.172**	**0.301**
R3117x44xA/C	4.3560	4.4440	**4.3120**	**4.4880**	4.3670	4.4704	**4.3230**	**4.5144**	**0.176**	**0.308**
R3117x45xA/C	4.4550	4.5450	**4.4100**	**4.5900**	4.4662	4.5720	**4.4212**	**4.6170**	**0.180**	**0.315**
R3117x46xA/C	4.5540	4.6460	**4.5080**	**4.6920**	4.5655	4.6736	**4.5195**	**4.7196**	**0.184**	**0.322**
R3117x47xA/C	4.6530	4.7470	**4.6060**	**4.7940**	4.6647	4.7752	**4.6177**	**4.8222**	**0.188**	**0.329**
R3117x48xA/C	4.7520	4.8480	**4.7040**	**4.8960**	4.7640	4.8768	**4.7160**	**4.9248**	**0.192**	**0.336**
R3117x49xA/C	4.8510	4.9490	**4.8020**	**4.9980**	4.8632	4.9784	**4.8142**	**5.0274**	**0.196**	**0.343**
R3117x50xA/C	4.9500	5.0500	**4.9000**	**5.1000**	4.9625	5.0800	**4.9125**	**5.1300**	**0.200**	**0.350**

Sense Resistor		Nch Driver Output Current 1		Nch Driver Output Current2		Pch Driver Output Current		Detector Output Delay Time		Release Output Delay Time	
R_{SENSE} [MΩ]		I_{OUT1} [µA]		I_{OUT2} [mA]		I_{OUT3} [mA]		t_{PHL} [µs]		t_{PLH} [µs]	
Min.	Typ.	Cond.	Min.	Cond.	Min.	Cond.	Min.	Cond.	Typ.	Cond.	Typ.
6	25	V_{DD}= 0.6V V_{DS}= 0.5V	**0.020**	V_{DD}= 4.5V V_{DS}= 2.1V	**0.650**	V_{DD}= 5.0V V_{SENSE}= 6.0V ↓ 0V *Note)	80	V_{DD}= 5.0V V_{SENSE}= 0V ↓ -V_{DET} +2.0V *Note)	50	
		V_{DD}= 1.0V V_{DS}= 0.5V	**0.400**								
5	40	V_{DD}= 0.6V V_{DS}= 0.05V	**7**	V_{DD}= 1.5V V_{DS}= 0.5V	**1.000**		40				
				V_{DD}= 3.0V V_{DS}= 0.5V	**2.400**	V_{DD}= 4.5V V_{DS}= 2.1V	**0.650**	V_{DD}= 5.0V V_{SENSE}= 6.0V ↓ -V_{DET} -2.0V *Note)			
10						V_{DD}= 6.0V V_{DS}= 2.1V	**0.900**			V_{DD}= 5.0V V_{SENSE}= 0V ↓ 6.0V *Note)	100

Note) 1. In the case of CMOS output type:
Time interval from forcing pulsive 6.0V to -V_{DET}-2.0V or 0V, or from forcing 0V to -V_{DET}+2.0V or 6.0V to SENSE pin, to when the output voltage will reach V_{DD}/2.
2. In the case of Nch Open drain output type:
Output pin is pulled up to 5V with 470kΩ and time interval from forcing 6.0V to -V_{DET}-2.0V or 0V, or forcing pulsive 0V to -V_{DET}+2.0V or 6.0V to when the output voltage reaches up to 2.5V.

TIMING CHART

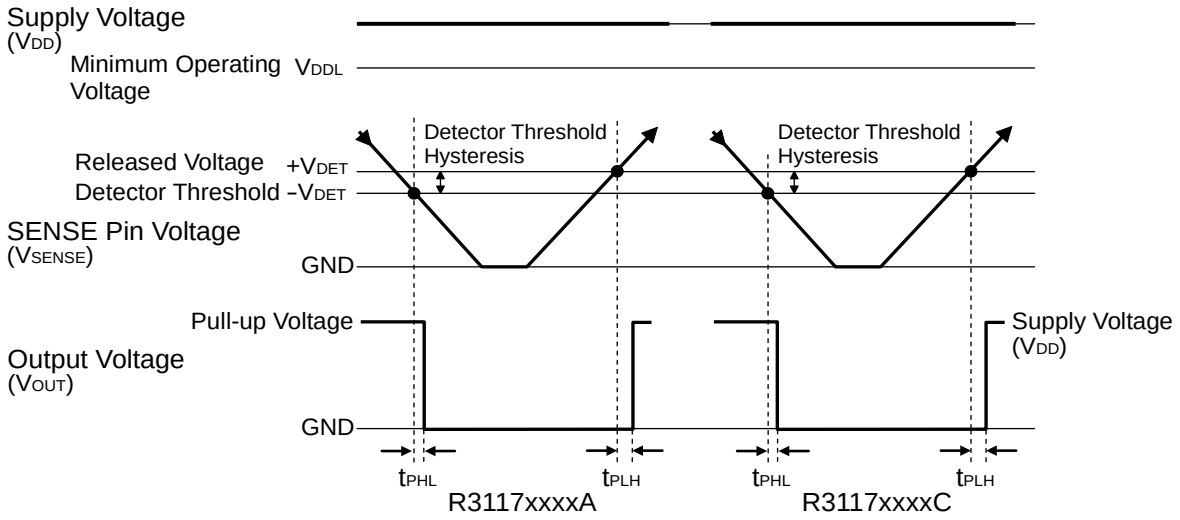

DEFINITION OF OUTPUT DELAY TIME

Output Delay Time (t_{PLH}) is defined as follows:

1. In the case of Nch Open Drain Output:
   Under the condition of the output pin (D_{OUT}) is pulled up through a resistor of 470kΩ to 5V, the time interval between the rising edge of SENSE Pin pulse from 0V to ($-V_{DET}$)+2.0V or the time interval of 6.0V pulse voltage is supplied, the becoming of the output voltage to 2.5V.

2. In the case of CMOS Output:
   The time interval between the rising edge of SENSE Pin pulse from 0V to ($-V_{DET}$)+2.0V or the time interval of 6.0V pulse voltage is supplied, the becoming of the output voltage to $V_{DD}/2$.

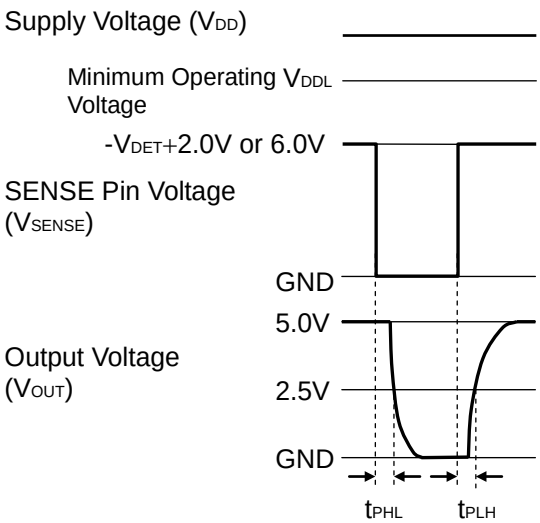

Nch Open Drain Output
(R3117xxxxA)

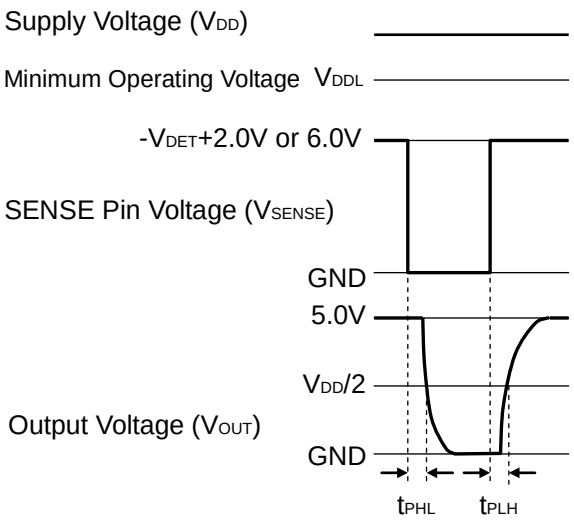

CMOS Output
(R3117xxxxC)

OPERATION

• Operation of R3117xxxxA

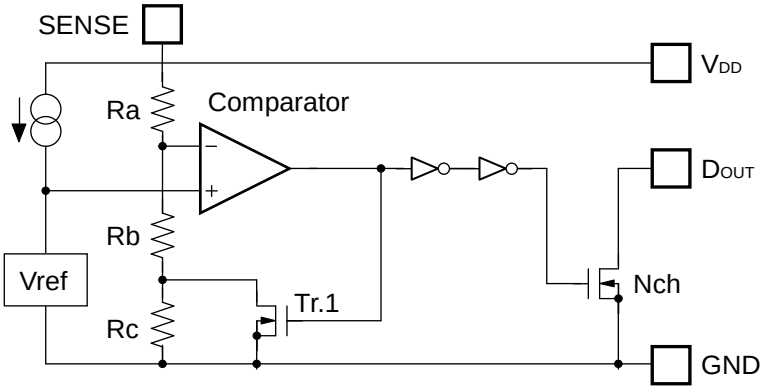

DOUT pin should be pulled-up to VDD or an external voltage level.

Block Diagram (R3117xxxxA)

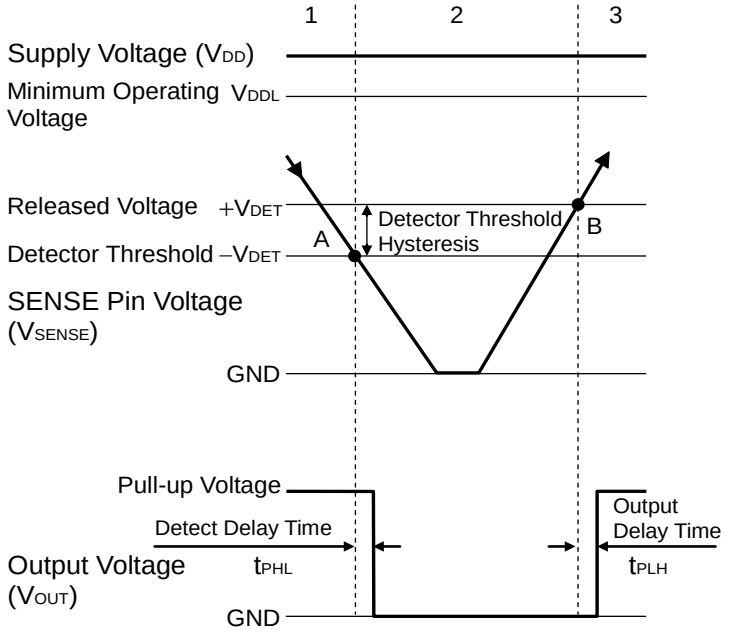

Step		1	2	3
Comparator (–) Pin Input Voltage		I	II	I
Comparator Output		L	H	L
Tr.1		OFF	ON	OFF
Output Tr.	Nch	OFF	ON	OFF

$$\text{I} \quad \frac{Rb+Rc}{Ra+Rb+Rc} \times V_{SENSE}$$

$$\text{II} \quad \frac{Rb}{Ra+Rb} \times V_{SENSE}$$

Operation Diagram

• Explanation of operation

Step 1. The output voltage is equal to the pull-up voltage.

Step 2. At Point "A", Vref ≧ V_{SENSE}×(Rb+Rc)/(Ra+Rb+Rc) is true, as a result, the output of comparator is reversed from "L" to "H", therefore the output voltage becomes the GND level. The voltage level of Point A means a detector threshold voltage (-V_{DET}). (When the supply voltage is lower than the minimum operating voltage, the operation of the output transistor becomes indefinite. The output voltage is equal to the GND level.)

Step 3. At Point "B", Vref ≦ V_{SENSE}×Rb/(Ra+Rb) is true, as a result, the output of comparator is reversed from "H" to "L", then the output voltage is equal to the pull-up voltage. The voltage level of Point B means a released voltage (+V_{DET}).

∗) The difference between a released voltage and a detector threshold voltage is a detector threshold hysteresis.

- **Operation of R3117xxxxC**

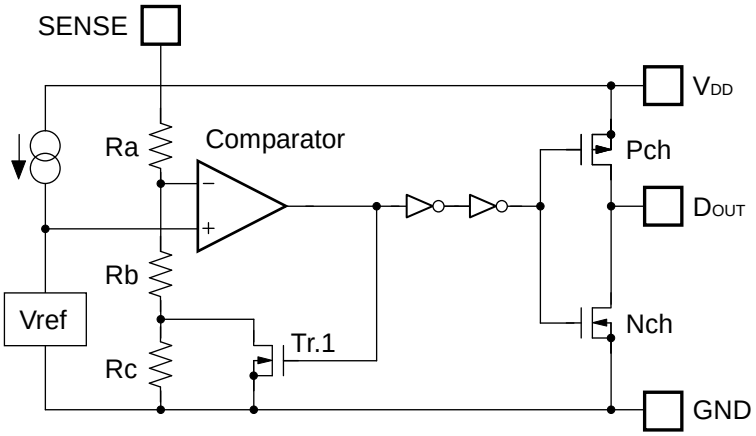

Block Diagram (R3117xxxxC)

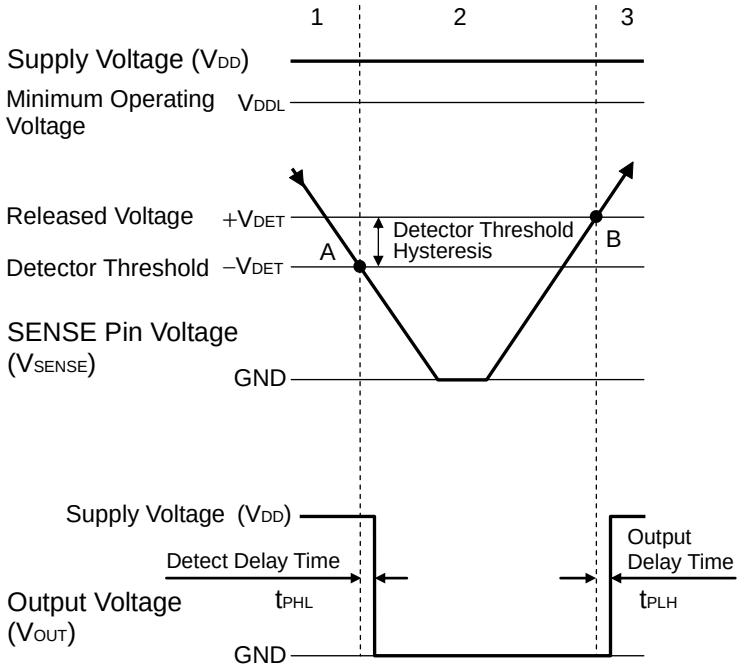

Step		1	2	3
Comparator (−) Pin Input Voltage		I	II	I
Comparator Output		L	H	L
Tr.1		OFF	ON	OFF
Output Tr.	Pch	ON	OFF	ON
	Nch	OFF	ON	OFF

$$\text{I} \quad \frac{Rb+Rc}{Ra+Rb+Rc} \times V_{SENSE}$$

$$\text{II} \quad \frac{Rb}{Ra+Rb} \times V_{SENSE}$$

Operation Diagram

- **Explanation of operation**

Step 1. The output voltage is equal to the supply voltage (V_{DD}).

Step 2. At Point "A", Vref ≧ V_{SENSE}×(Rb+Rc)/(Ra+Rb+Rc) is true, as a result, the output of comparator is reversed from "L" to "H", therefore the output voltage becomes the GND level. The voltage level of Point A means a detector threshold voltage (-V_{DET}). (When the supply voltage is lower than the minimum operating voltage, the operation of the output transistor becomes indefinite. The output voltage is equal to the GND level.

Step 3. At Point "B", Vref ≦ V_{SENSE}×Rb/(Ra+Rb) is true, as a result, the output of comparator is reversed from "H" to "L", then the output voltage is equal to the supply voltage (V_{DD}). The voltage level of Point B means a released voltage (+V_{DET}).

∗) The difference between a released voltage and a detector threshold voltage is a detector threshold hysteresis.

Power supply injection order

The R3117xxxxA/C Series supervise the voltage of the SENSE pin. V_{DD} pin and SENSE pin can be used at the same voltage level. Likewise, V_{DD} pin and SENSE pin can be used at the different voltage level. If the V_{DD} pin and SENSE pin are used at different voltage level, regarding the start-up sequence, force the voltage level to V_{DD} pin prior to the SENSE pin. Please note that if the V_{DD} voltage enters the shaded area in the Fig.2 after the power activation, it may cause the malfunction.

The vertical axis in the Fig.2 shows the fluctuating magnification of V_{DD}.

For example, when V_{DD} is 1.5V with the released state and if V_{DD} increase to 5.25V (3.5 times) within 100ns, it may cause the malfunction.

If the SENSE pin voltage is equal or more than the released voltage ($+V_{DET}$), D_{OUT} pin becomes "H". Besides, a voltage beyond V_{DD} pin is also acceptable to SENSE pin. Concerning the R3117xxxxA series (Nch open drain output type), D_{OUT} pin must be pulled-up with an external resister.

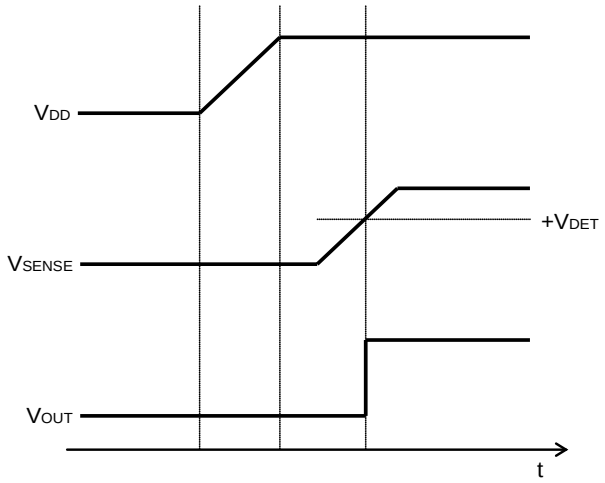

Fig.1 Turn on sequence

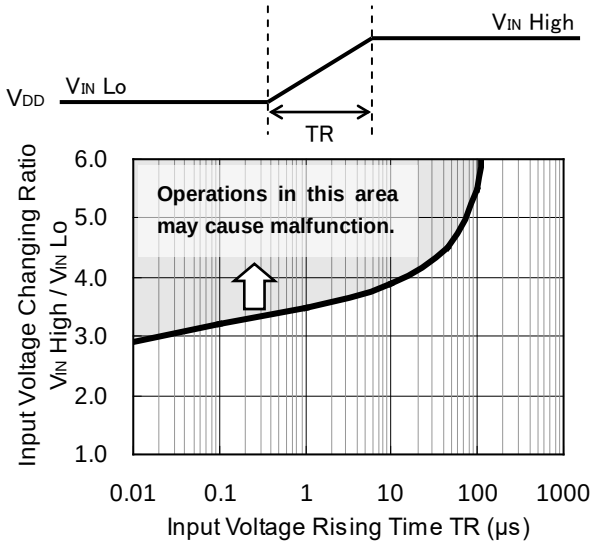

Fig.2

Outside setting of the detection voltage

To monitor the voltage more than 5.0V or if the different detector threshold with using lower threshold device, divider resistors can be applied to the SENSE pin. In this usage, some error range will be generated to the detector threshold voltage caused by the internal resistor R_{SENSE} (Fig.3) of the IC. Supposed that the detector threshold voltage is described as Vs, the next equation will be true.

$V_S = -V_{DET} \times (Ra+Rb)/Rb$.

However, actually an error includes by SENSE resistance (R_{SENSE}) of the IC inside. (Figure 4)

$Ia = Ib + I_{SENSE}$ ..... (1)

$Ib = -V_{DET} / Rb$ ..... (2)

Thus,

$Ia = -V_{DET} / Rb + I_{SENSE}$ ..... (3)

Therefore,

$V_S = -V_{DET} + Ia \times Ra$ ..... (4)

Put Equation (3) into Equation (4), then

$V_S = -V_{DET} \times (Ra + Rb) / Rb + Ra \times I_{SENSE}$

$Ra \times I_{SENSE}$ is an error in V_S.

$Ra \times I_{SENSE} = Ra \times (-V_{DET}) / R_{SENSE}$
$= -V_{DET} \times Ra / R_{SENSE}$

The error range is $-V_{DET} \times Ra/R_{SENSE}$ (Fig.3) and to make it small, choosing the low detector threshold voltage type and set the resistance values Ra, Rb as R_{SENSE} >>Ra. Refer to the electrical characteristics table to see the R_{SENSE} value.

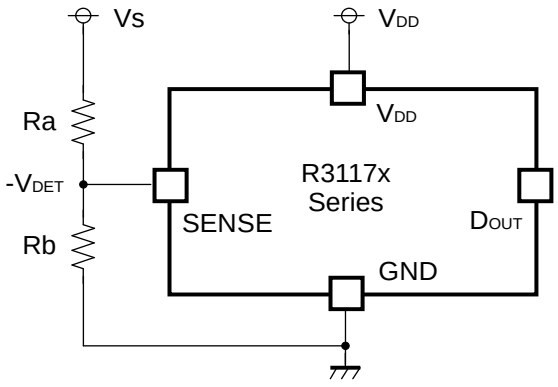

Fig.3

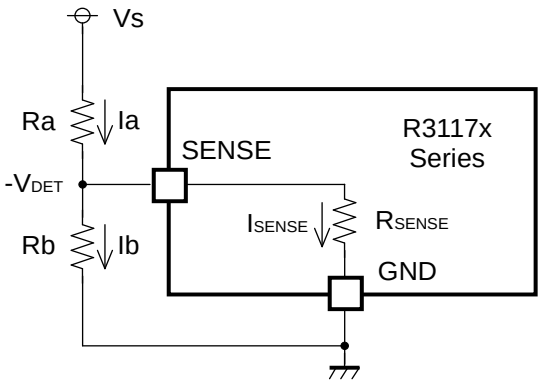

Fig.4

Accuracy Detector Threshold

If the V_{DD} bias voltage is lager than 5.25V, and to keep the detector threshold accuracy level, or if the maximum operating voltage line must be used as the V_{DD} bias voltage, the input voltage must be set low by using the divider resistors which are shown in Fig.5.

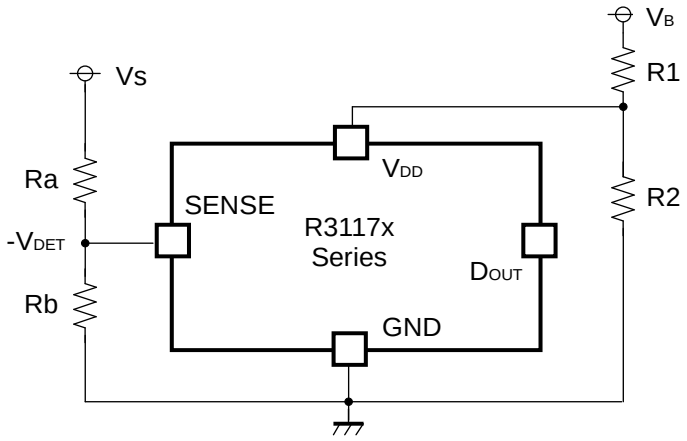

Fig.5

Detector Operation vs. glitch input voltage to the SENSE pin

When the R3117x is at released, if the pulse voltage which the detector threshold or lower voltage, the graph below means that the relation between pulse width and the amplitude of the swing to keep the released state for the R3117x.

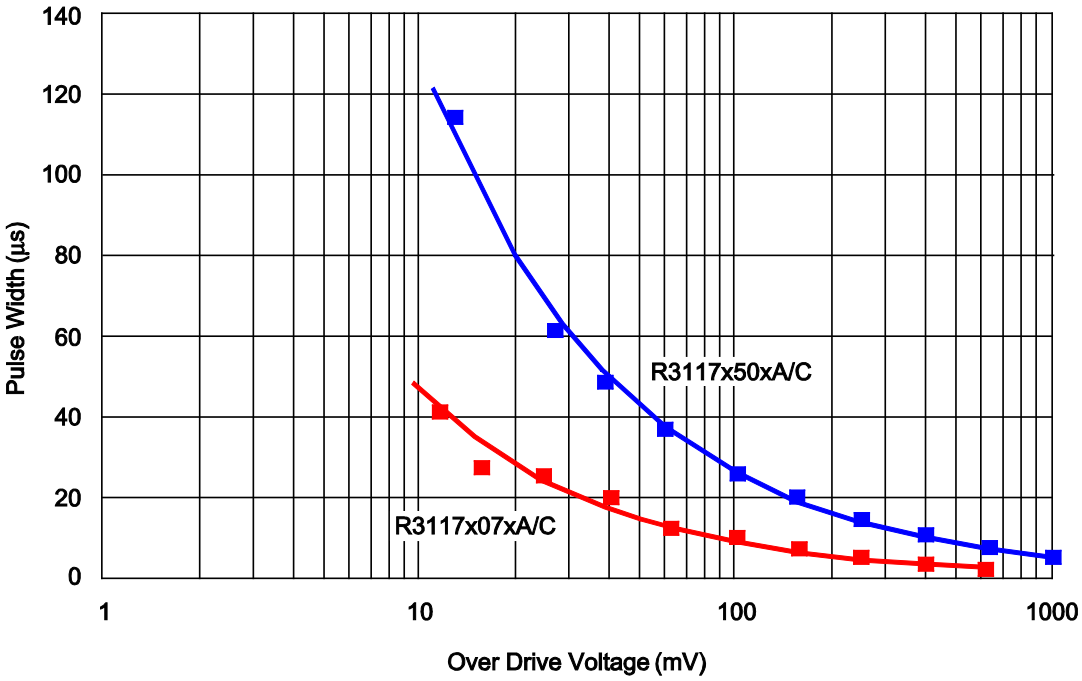

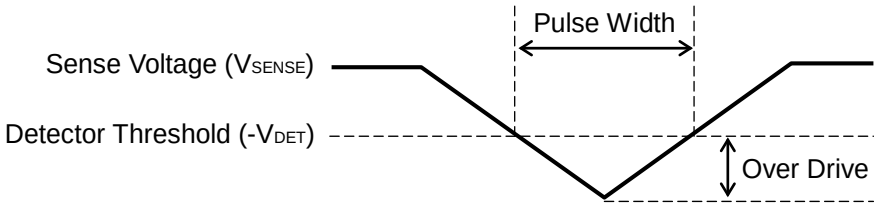

VSENSE Input Waveform

This graph shows the maximum pulse conditions to keep the released voltage. If the pulse with larger amplitude or wider width than the graph above, is input to SENSE pin, the reset signal may be output.

TEST CIRCUITS

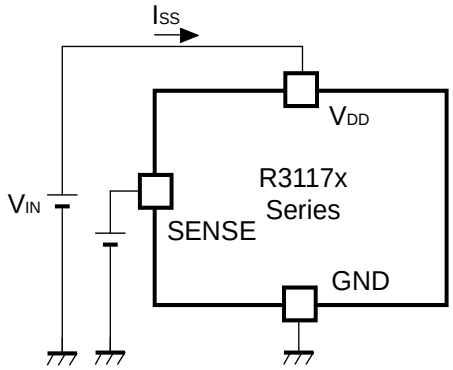

Supply Current Test Circuit

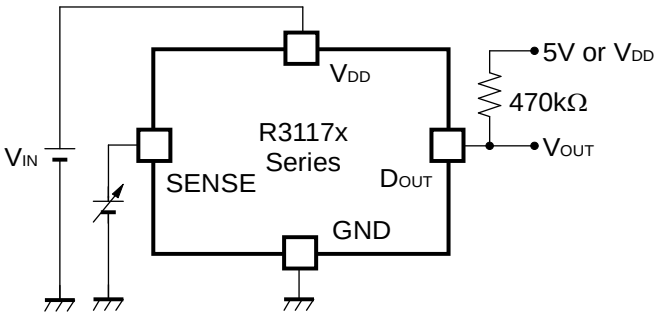

Detector Threshold Test Circuit
(Pull-up circuit is not necessary for CMOS Output type.)

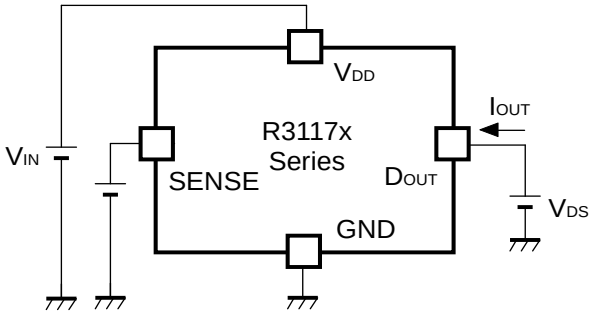

Nch Driver Output Current Test Circuit

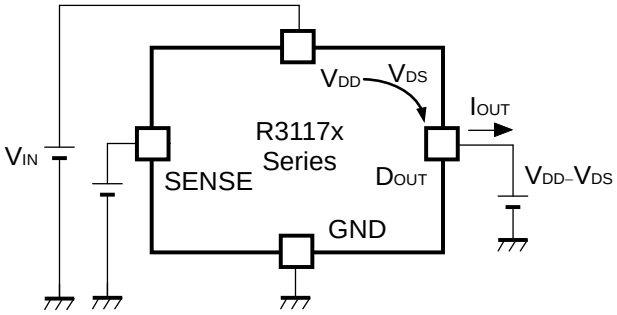

Pch Driver Output Current Test Circuit
∗Apply to CMOS Output type only

TYPICAL CHARACTERISTICS

1) Supply Current vs. Supply Voltage

R3117xxxxA/C (at released)

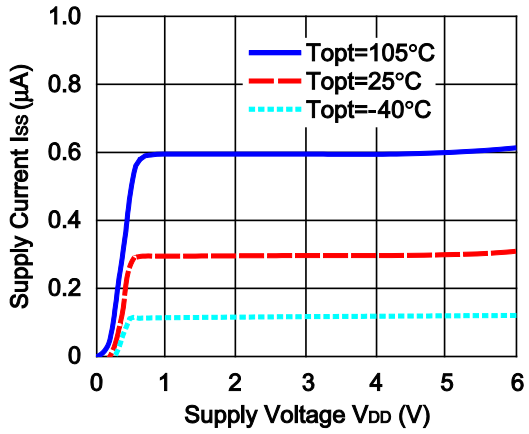

R3117xxxxA/C (at detect)

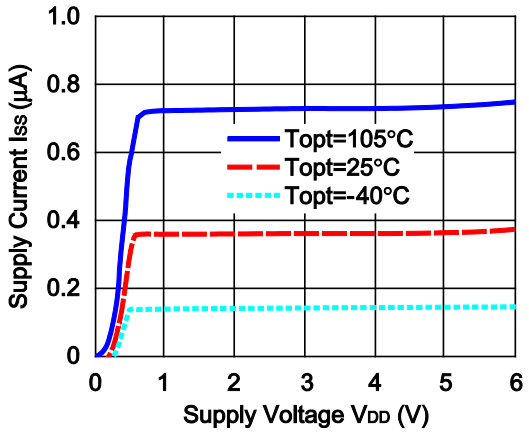

2) Detector Threshold vs. Temperature

R3117x07xA/C

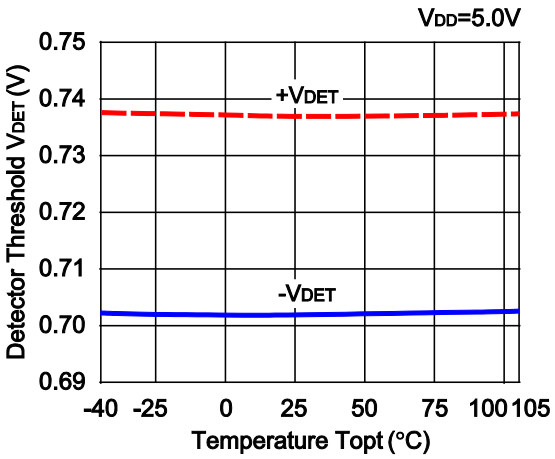

R3117x30xA/C

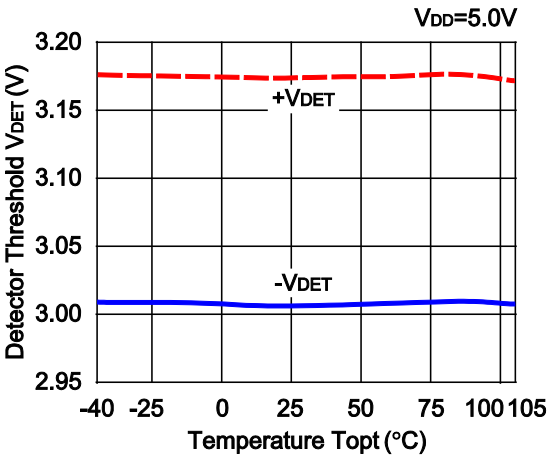

R3117x50xA/C

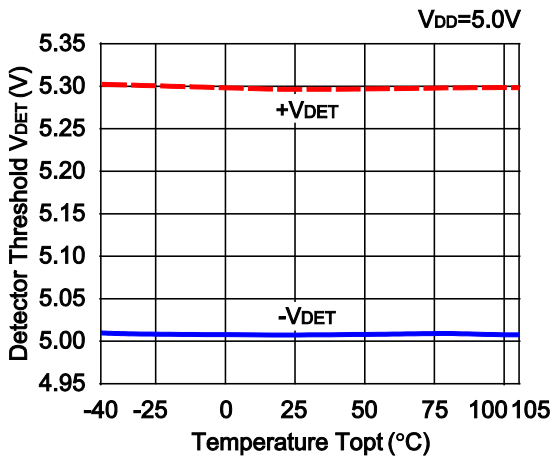

3) Detector Threshold vs. Supply Voltage

R3117x07xA/C

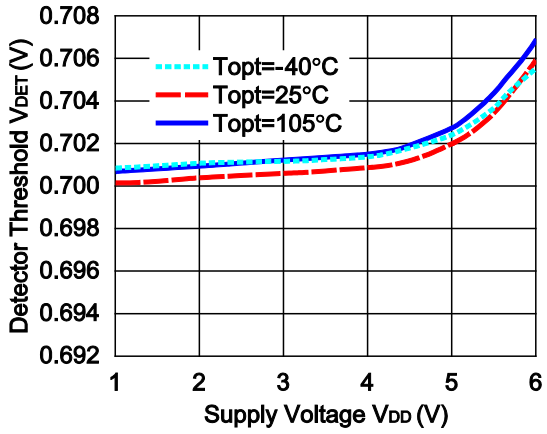

R3117x30xA/C

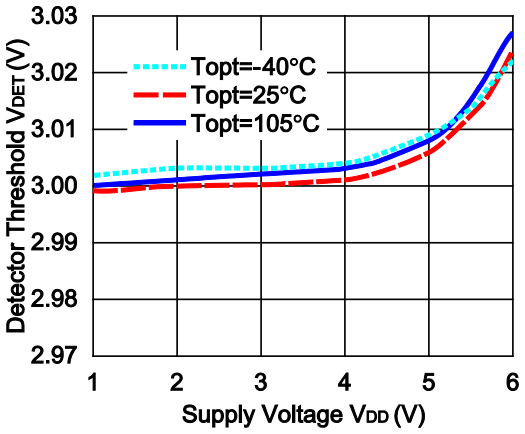

R3117x50xA/C

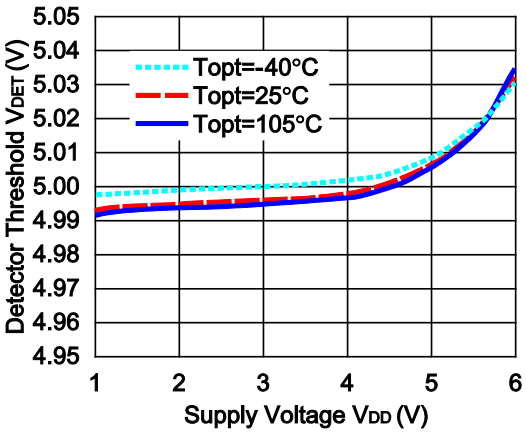

4) Hysteresis vs. Supply Voltage

R3117x07xA/C

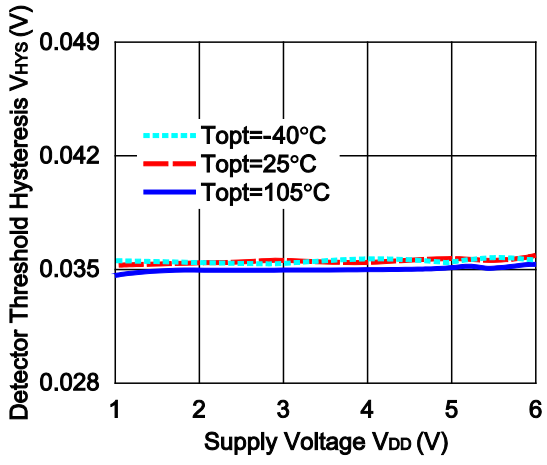

R3117x30xA/C

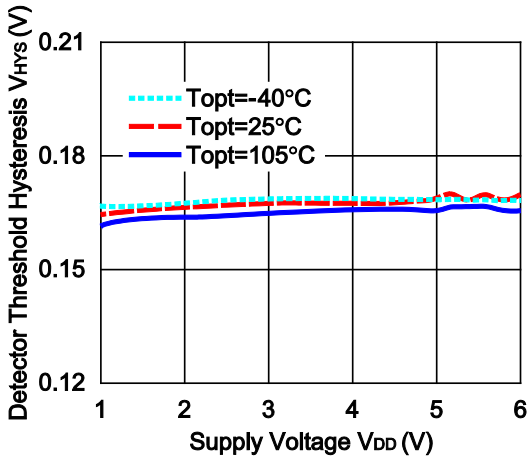

R3117x50xA/C

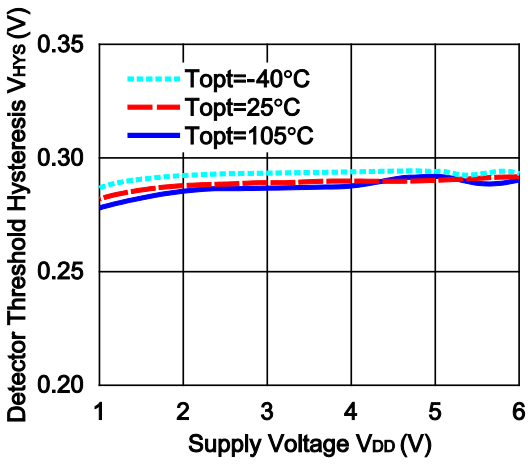

5) Output Voltage vs. SENSE pin Input Voltage (Nch Open Drain Output type is pulled up to VDD.)

R3117x07xA/C

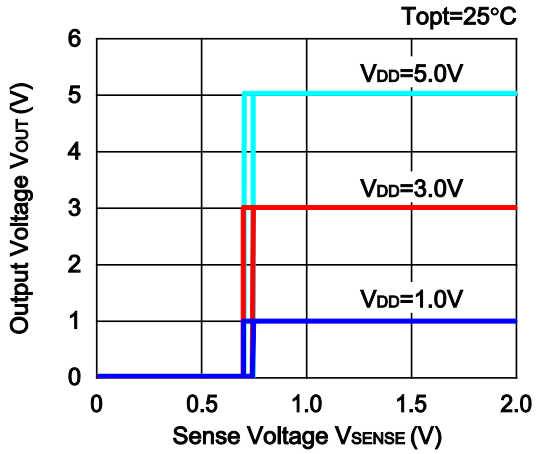

R3117x30xA/C

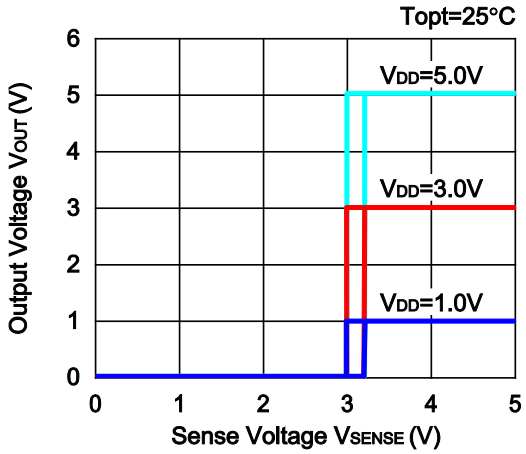

R3117x50xA/C

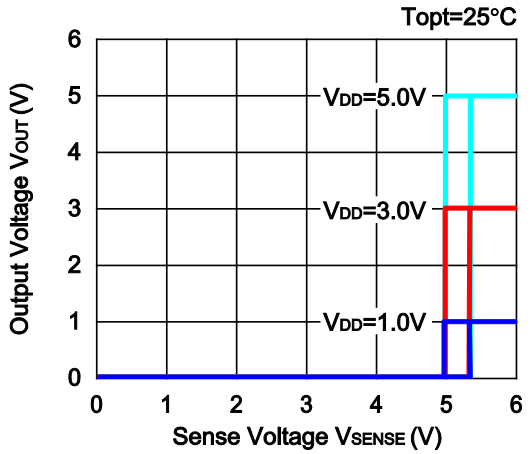

6) Nch Driver Output Current vs. Supply Voltage

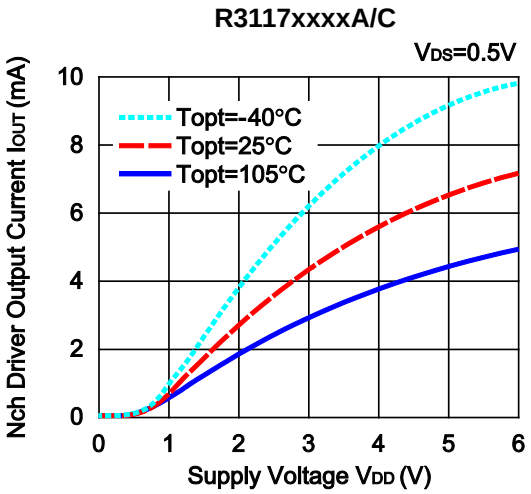

7) Nch Driver Output Current vs. VDS

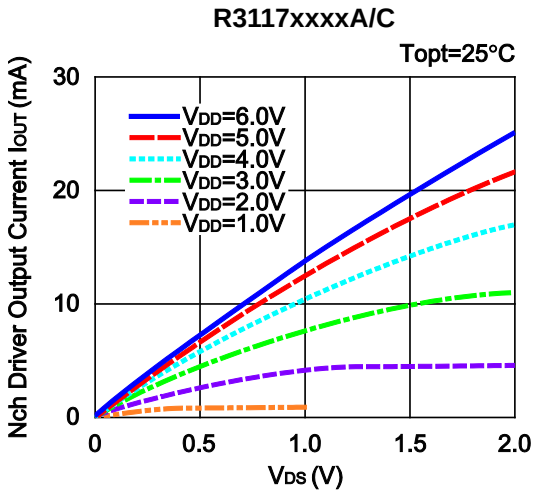

8) Pch Driver Output Current vs. Supply Voltage

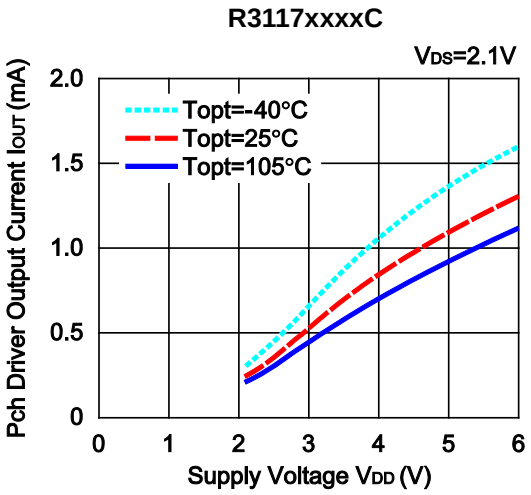

9) Pch Driver Output Current vs. VDS

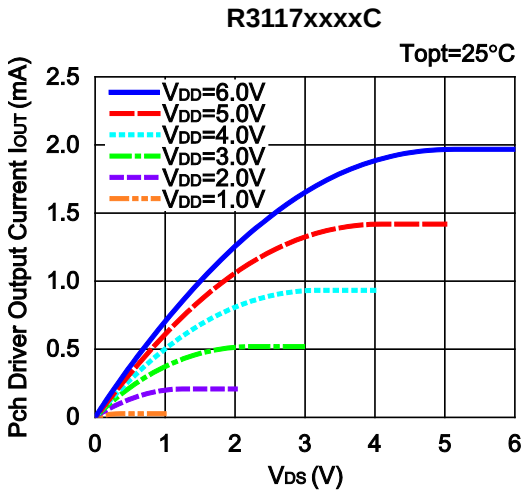

TYPICAL APPLICATION

- **R3117xxxxA CPU Reset Circuit (Nch Open Drain Output)**

(1) Input Voltage to R3117xxxxA is equal to Input Voltage to CPU

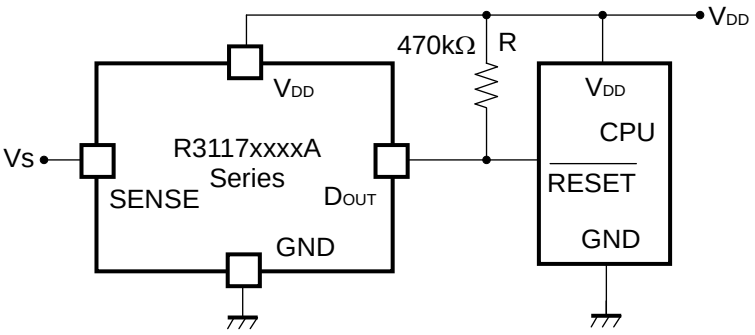

(2) Input Voltage to R3117xxxxA is unequal to Input Voltage to CPU

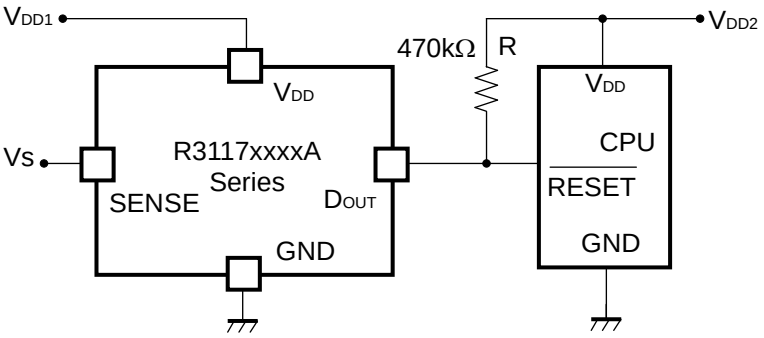

- **R3117xxxxC CPU Reset Circuit (CMOS Output)**

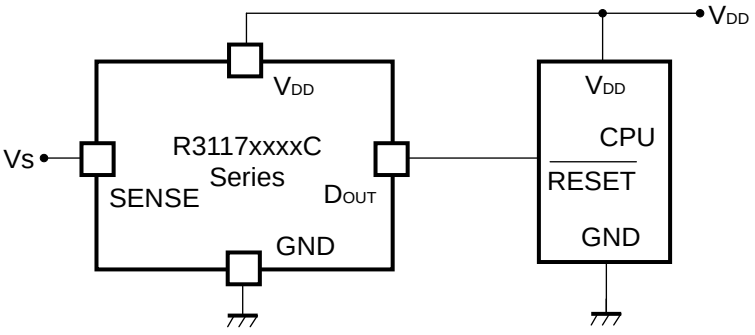

TECHNICAL NOTES

When connecting resistors to the device's input pin

When connecting a resistor (R1) to an input of this device, the input voltage decreases by [Device's Consumption Current] x [Resistance Value] only. And, the cross conduction current*1, which occurs when changing from the detecting state to the release state, is decreased the input voltage by [Cross Conduction Current] x [Resistance Value] only. And then, this device will enter the re-detecting state if the input voltage reduction is larger than the difference between the detector voltage and the released voltage.

When the input resistance value is large and the VDD is gone up at mildly in the vicinity of the released voltage, repeating the above operation may result in the occurrence of output.

As shown in Figure A/B, set R1 to become 100 kΩ or less as a guide, and connect C_{IN} of 0.1 µF and more to between the input pin and GND. Besides, make evaluations including temperature properties under the actual usage condition, with using the evaluation board like this way. As a result, make sure that the cross conduction current has no problem.

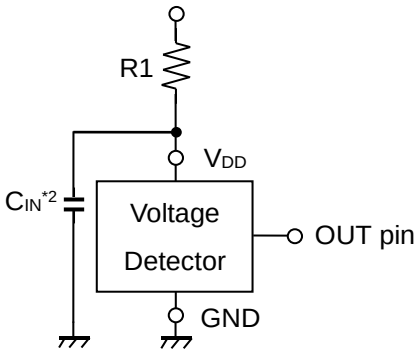

Figure A

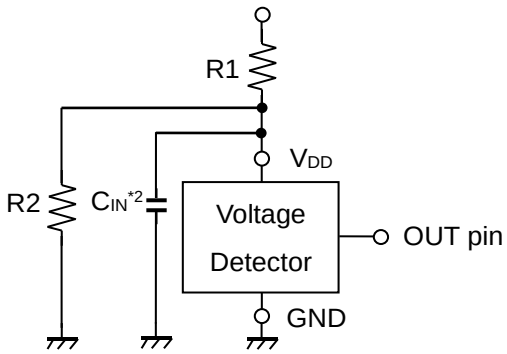

Figure B

*1 In the CMOS output type, a charging current for OUT pin is included.

*2 Note the bias dependence of capacitors.

1. The products and the product specifications described in this document are subject to change or discontinuation of production without notice for reasons such as improvement. Therefore, before deciding to use the products, please refer to our sales representatives for the latest information thereon.
2. The materials in this document may not be copied or otherwise reproduced in whole or in part without prior written consent of our company.
3. Please be sure to take any necessary formalities under relevant laws or regulations before exporting or otherwise taking out of your country the products or the technical information described herein.
4. The technical information described in this document shows typical characteristics of and example application circuits for the products. The release of such information is not to be construed as a warranty of or a grant of license under our company's or any third party's intellectual property rights or any other rights.
5. The products listed in this document are intended and designed for use as general electronic components in standard applications (office equipment, telecommunication equipment, measuring instruments, consumer electronic products, amusement equipment etc.). Those customers intending to use a product in an application requiring extreme quality and reliability, for example, in a highly specific application where the failure or misoperation of the product could result in human injury or death (aircraft, spacevehicle, nuclear reactor control system, traffic control system, automotive and transportation equipment, combustion equipment, safety devices, life support system etc.) should first contact us.
6. We are making our continuous effort to improve the quality and reliability of our products, but semiconductor products are likely to fail with certain probability. In order to prevent any injury to persons or damages to property resulting from such failure, customers should be careful enough to incorporate safety measures in their design, such as redundancy feature, fire containment feature and fail-safe feature. We do not assume any liability or responsibility for any loss or damage arising from misuse or inappropriate use of the products.
7. Anti-radiation design is not implemented in the products described in this document.
8. The X-ray exposure can influence functions and characteristics of the products. Confirm the product functions and characteristics in the evaluation stage.
9. WLCSP products should be used in light shielded environments. The light exposure can influence functions and characteristics of the products under operation or storage.
10. There can be variation in the marking when different AOI (Automated Optical Inspection) equipment is used. In the case of recognizing the marking characteristic with AOI, please contact our sales or our distributor before attempting to use AOI.
11. Please contact our sales representatives should you have any questions or comments concerning the products or the technical information.

NISSHINBO

Nisshinbo Micro Devices Inc.

Official website
https://www.nisshinbo-microdevices.co.jp/en/
Purchase information
https://www.nisshinbo-microdevices.co.jp/en/buy/