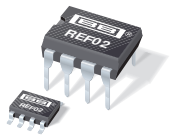

SBVS003B – JANUARY 1993 – REVISED JANUARY 2005

+5V Precision VOLTAGE REFERENCE

FEATURES

- **OUTPUT VOLTAGE: +5V ±0.2% max**
- **EXCELLENT TEMPERATURE STABILITY: 10ppm/°C max (–40°C to +85°C)**
- **LOW NOISE: 10μV_{PP} max (0.1Hz to 10Hz)**
- **EXCELLENT LINE REGULATION: 0.01%/V max**
- **EXCELLENT LOAD REGULATION: 0.008%/mA max**
- **LOW SUPPLY CURRENT: 1.4mA max**
- **SHORT-CIRCUIT PROTECTED**
- **WIDE SUPPLY RANGE: 8V to 40V**
- **INDUSTRIAL TEMPERATURE RANGE: –40°C to +85°C**
- **PACKAGE OPTIONS: DIP-8, SO-8**

APPLICATIONS

- **PRECISION REGULATORS**
- **CONSTANT CURRENT SOURCE/SINK**
- **DIGITAL VOLTMETERS**
- **V/F CONVERTERS**
- **A/D AND D/A CONVERTERS**
- **PRECISION CALIBRATION STANDARD**
- **TEST EQUIPMENT**

DESCRIPTION

The REF02 is a precision 5V voltage reference. The drift is laser trimmed to 10ppm/°C max over the extended industrial and military temperature range. The REF02 provides a stable 5V output that can be externally adjusted over a ±6% range with minimal effect on temperature stability. The REF02 operates from a single supply with an input range of 8V to 40V with a very low current drain of 1mA, and excellent temperature stability due to an improved design. Excellent line and load regulation, low noise, low power, and low cost make the REF02 the best choice whenever a 5V voltage reference is required. Available package options are DIP-8 and SO-8. The REF02 is an ideal choice for portable instrumentation, temperature transducers, Analog-to-Digital (A/D) and Digital-to-Analog (D/A) converters, and digital voltmeters.

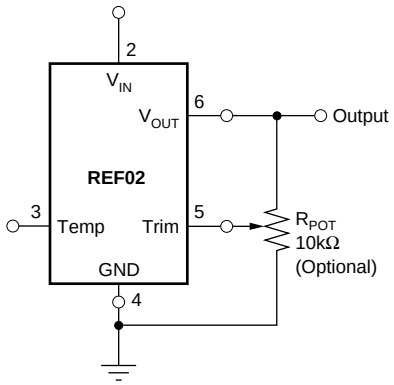

+5V Reference with Trimmed Output

Please be aware that an important notice concerning availability, standard warranty, and use in critical applications of Texas Instruments semiconductor products and disclaimers thereto appears at the end of this data sheet.

All trademarks are the property of their respective owners.

PRODUCTION DATA information is current as of publication date. Products conform to specifications per the terms of Texas Instruments standard warranty. Production processing does not necessarily include testing of all parameters.

Copyright © 1993-2005, Texas Instruments Incorporated

SPECIFICATIONS

ELECTRICAL

At T_A = +25°C and V_{IN} = +15V power supply, unless otherwise noted.

PARAMETER	CONDITIONS	REF02A MIN	REF02A TYP	REF02A MAX	REF02B MIN	REF02B TYP	REF02B MAX	UNITS
OUTPUT VOLTAGE	I_{LOAD} = 0mA	4.985	5.0	5.015	4.990	*	5.010	V
Change with Temperature[1, 2] (ΔV_{OT}) –40°C to +85°C			0.05	0.19		0.05	0.13	%
OUTPUT VOLTAGE DRIFT[3] –40°C to +85°C (TCV_O)			4	15		4	10	±ppm/°C
LONG-TERM STABILITY	2000h Test							
First 1000h			100			100		±ppm
Second 1000h			50			50		±ppm
OUTPUT ADJUSTMENT RANGE	R_{POT} = 10kΩ[6]	±3	±6		*	*		%
CHANGE IN V_O TEMP COEFFICIENT WITH OUTPUT ADJUSTMENT (–55°C to +125°C)	R_{POT} = 10kΩ		0.7			*		ppm/%
OUTPUT VOLTAGE NOISE	0.1Hz to 10Hz[5]		4	10		*	*	μV_{PP}
LINE REGULATION[4]	V_{IN} = 8V to 33V		0.006	0.010		*	*	%/V
–40°C to +85°C	V_{IN} = 8.5V to 33V		0.008	0.012		*	*	
LOAD REGULATION[4]	I_L = 0mA to +10mA		0.005	0.010		*	0.008	%/mA
–40°C to +85°C	I_L = 0mA to +10mA		0.007	0.012		*	0.010	
TURN-ON SETTLING TIME	To ±0.1% of Final Value		5			*		µs
QUIESCENT CURRENT	No Load		1.0	1.4		*	*	mA
LOAD CURRENT (SOURCE)		10	21		*	*		mA
LOAD CURRENT (SINK)		–0.3	–0.5		*	*		mA
SHORT-CIRCUIT CURRENT	V_{OUT} = 0		30			*		mA
POWER DISSIPATION	No Load		15	21		*	*	mW
TEMPERATURE VOLTAGE OUTPUT[7]			630			*		mV
TEMPERATURE COEFFICIENT of Temperature Pin Voltage –55°C to +125°C			2.1					mV/°C
TEMPERATURE RANGE Specification REF02A, B, C		–40		+85	*		*	°C

NOTES: (1) ΔV_{OT} is defined as the absolute difference between the maximum output and the minimum output voltage over the specified temperature range expressed as a percentage of 5V:

$$\Delta V_O = \left| \frac{V_{MAX} - V_{MIN}}{5V} \right| \times 100$$

(2) ΔV_{OT} specification applies trimmed to +5.000V or untrimmed.

(3) TCV_O is defined as ΔV_{OT} divided by the temperature range.

(4) Line and load regulation specifications include the effect of self heating.

(5) Sample tested.

(6) 10kΩ potentiometer connected between V_{OUT} and ground with wiper connected to Trim pin. See figure on page 1.

(7) Pin 3 is insensitive to capacitive loading. The temperature voltage will be modified by 7mV for each µA of loading.

ABSOLUTE MAXIMUM RATINGS

Input Voltage	+40V
Operating Temperature	
P, U	–40°C to +85°C
Storage Temperature Range	
P, U	–65°C to +125°
Output Short Circuit Duration (to Ground or V_{IN})	Indefinite
Junction Temperature	–65°C to +150°
θ_{JA} P	120°C/W
U	80°C/W
Lead Temperature (soldering, 60s)	+300°C

ELECTROSTATIC DISCHARGE SENSITIVITY

This integrated circuit can be damaged by ESD. Texas Instruments recommends that all integrated circuits be handled with appropriate precautions. Failure to observe proper handling and installation procedures can cause damage.

ESD damage can range from subtle performance degradation to complete device failure. Precision integrated circuits may be more susceptible to damage because very small parametric changes could cause the device not to meet its published specifications.

PIN CONFIGURATIONS

Top View **DIP/SO**

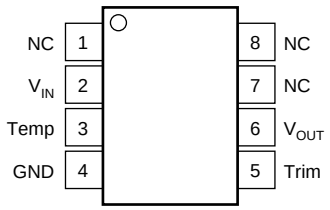

PACKAGE/ORDERING INFORMATION(1)

PRODUCT	V_{OUT} at 25°C	MAX DRIFT (ppm/°C)	PACKAGE	PACKAGE DRAWING DESIGNATOR	SPECIFICATION TEMPERATURE RANGE
REF02AU	5V±15mV	±15	SO-8	D	–40°C to +85°C
REF02BU	5V±10mV	±10	SO-8	D	–40°C to +85°C
REF02AP	5V±15mV	±15	DIP-8	P	–40°C to +85°C
REF02BP	5V±10mV	±10	DIP-8	P	–40°C to +85°C

NOTE: (1) For the most current package and ordering information, see the Package Option Addendum located at the end of this data sheet, or see the TI website at www.ti.com.

TYPICAL PERFORMANCE CURVES

AT T_A = +25°C, unless otherwise noted.

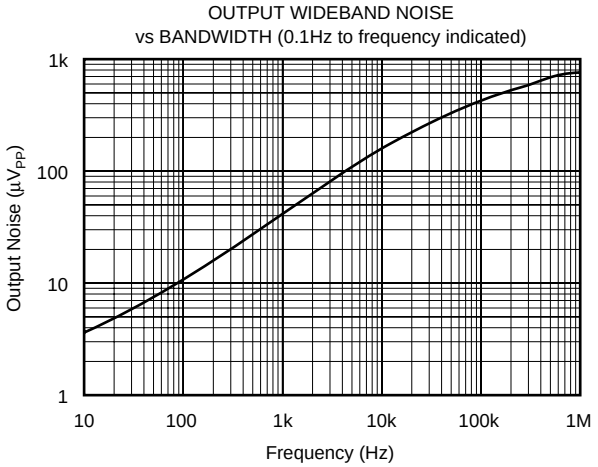

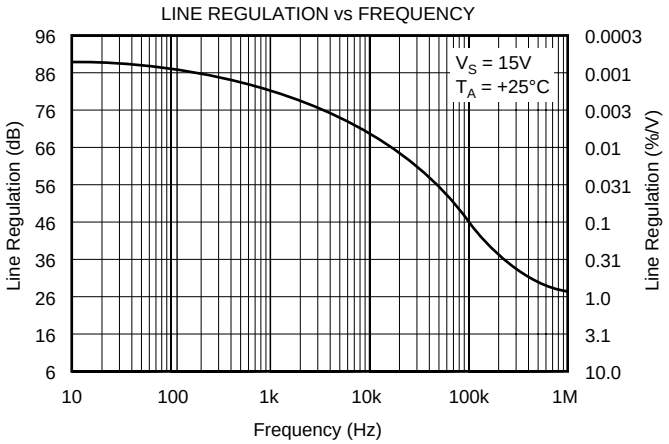

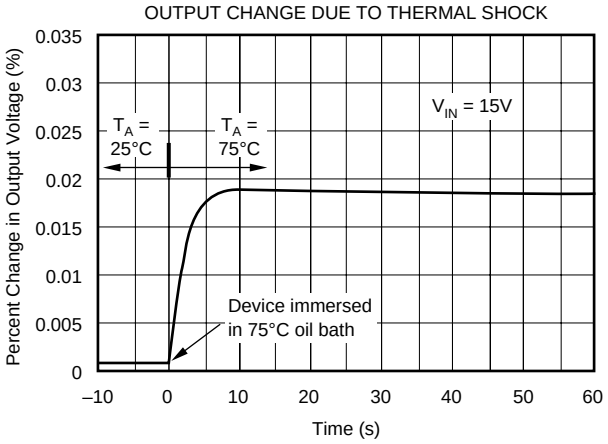

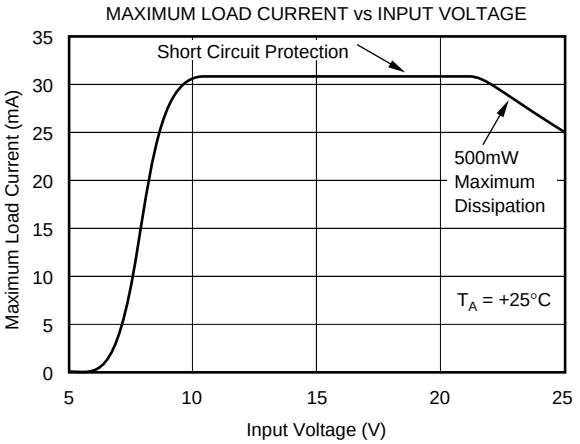

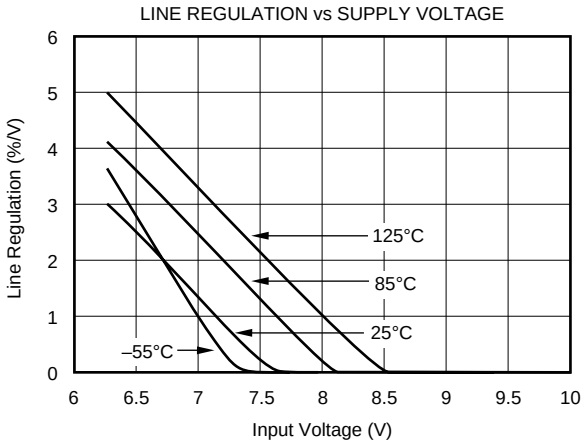

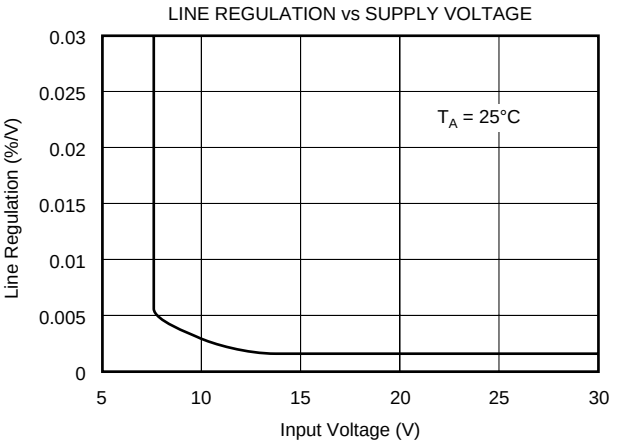

TYPICAL PERFORMANCE CURVES (Cont.)

At T_A = +25°C, unless otherwise noted.

NORMALIZED LOAD REGULATION (ΔIL = 10mA) vs TEMPERATURE

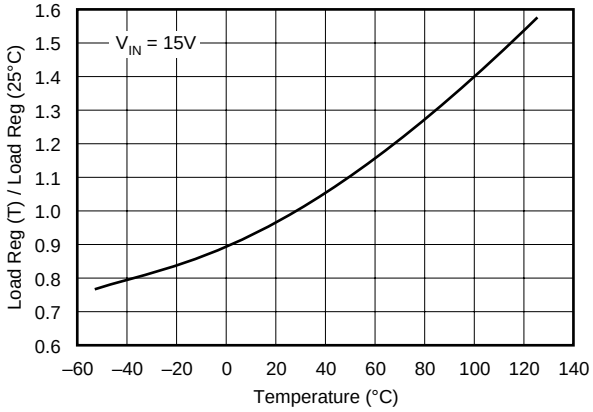

NORMALIZED LINE REGULATION vs TEMPERATURE

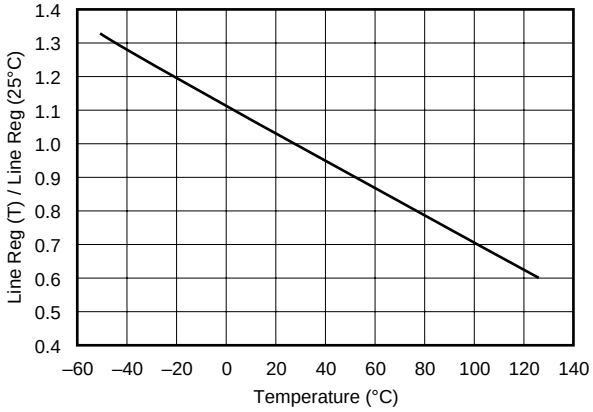

REF02 V_{OUT}

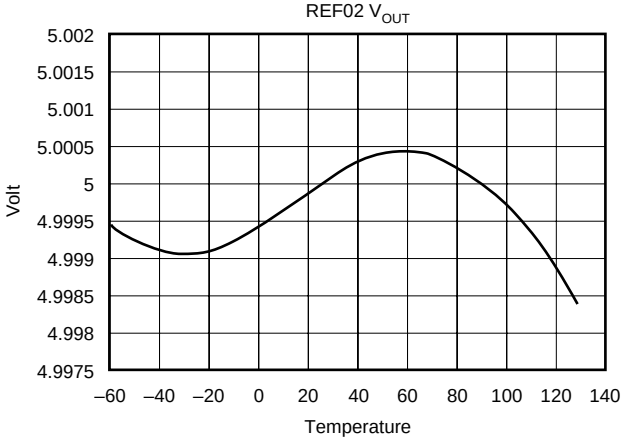

MAXIMUM LOAD CURRENT vs TEMPERATURE

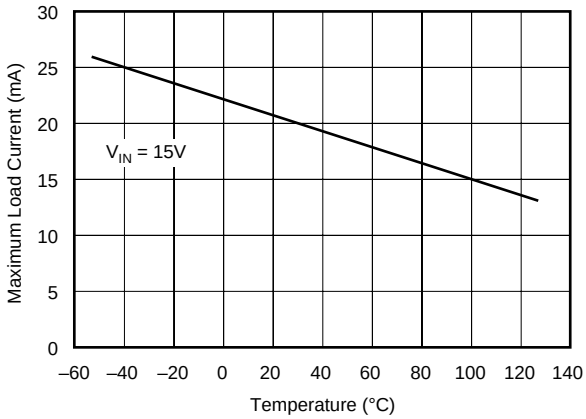

QUIESCENT CURRENT vs TEMPERATURE

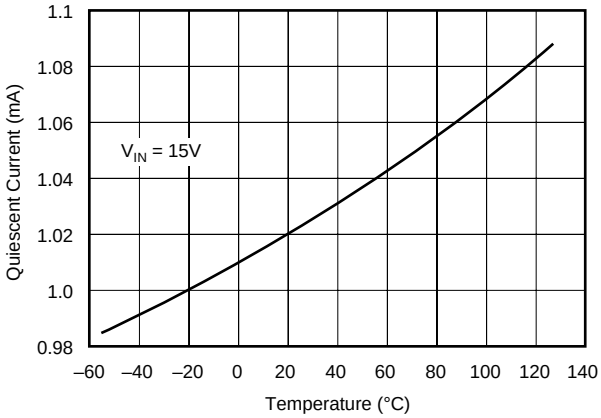

TYPICAL TEMPERATURE VOLTAGE OUTPUT vs TEMPERATURE

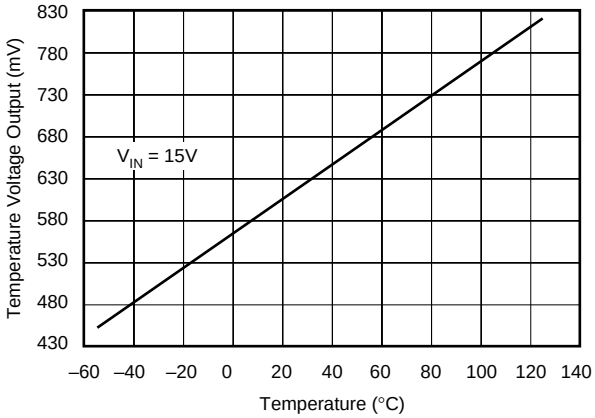

TYPICAL PERFORMANCE CURVES (Cont.)

At T_A = +25°C, unless otherwise noted.

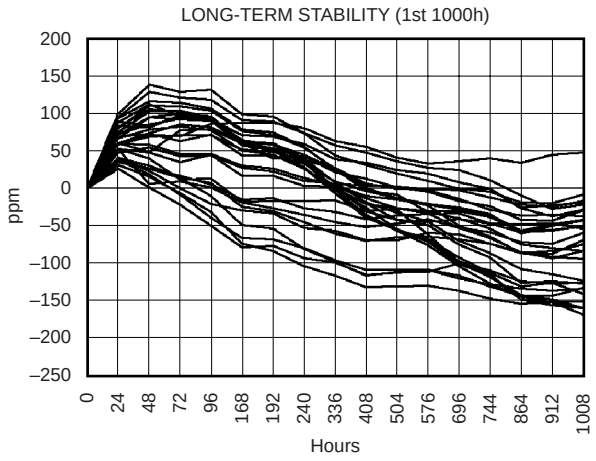

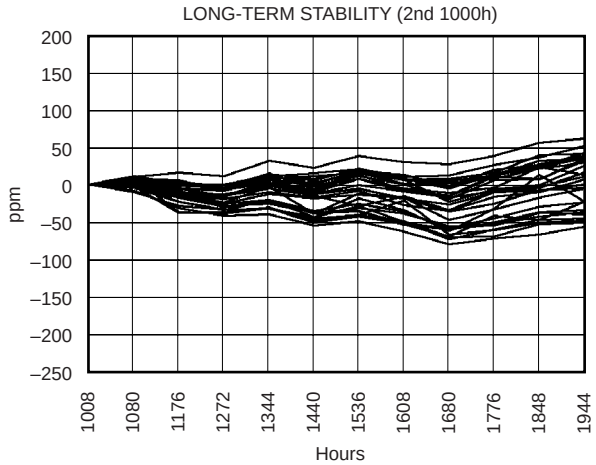

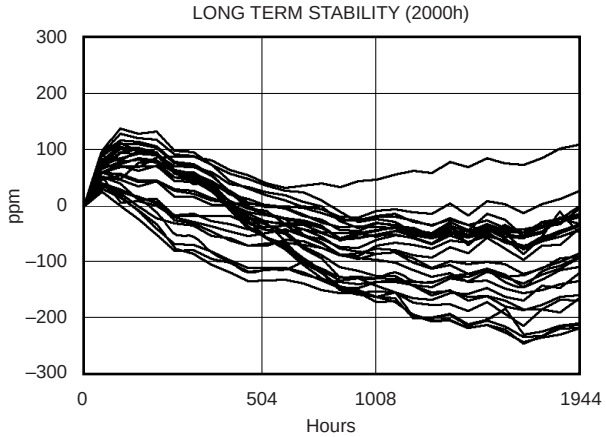

OUTPUT ADJUSTMENT

The REF02 trim terminal can be used to adjust the voltage over a 5V ±150mV range. This feature allows the system designer to trim system errors by setting the reference to a voltage other than 5V, including 5.12V[(1)] for binary applications (see circuit on page 1).

Adjustment of the output does not significantly affect the temperature performance of the device. The temperature coefficient change is approximately 0.7ppm/°C for 100mV of output adjustment.

NOTE: (1) 20mV LSB for 8-bit applications.

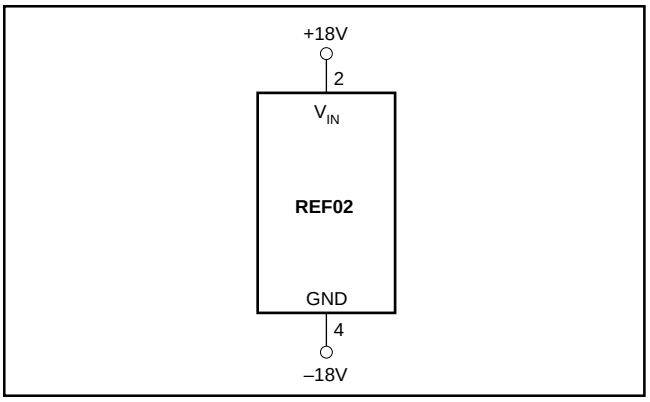

FIGURE 1. Burn-In Circuit.

REFERENCE STACKING PROVIDES OUTSTANDING LINE REGULATION

By stacking two REF01s and one REF02, a systems designer can achieve 5V, 15V, and 25V outputs. One very important advantage of this circuit is the near-perfect line regulation at 5V and 15V outputs. This circuit can accept a 27V to 55V change to the input with less than the noise voltage as a change to the output voltage. R_B, a load bypass resistor, supplies current I_{SY} for the 15V regulator.

Any number of REF01s and REF02s can be stacked in this configuration. For example, if ten devices are stacked in this configuration, ten 5V or five 10V outputs are achieved. The line voltage may range from 100V to 130V. Care should be exercised to insure that the total load currents do not exceed the maximum usable current, which is typically 21mA.

TYPICAL APPLICATIONS

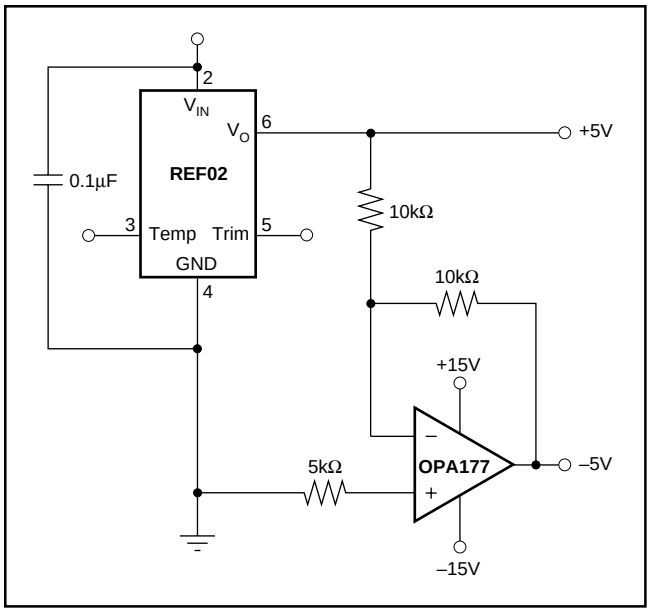

FIGURE 2. ±5V Precision Reference.

PACKAGING INFORMATION

Orderable part number	Status (1)	Material type (2)	Package | Pins	Package qty | Carrier	RoHS (3)	Lead finish/ Ball material (4)	MSL rating/ Peak reflow (5)	Op temp (°C)	Part marking (6)
REF02AU	Active	Production	SOIC (D) | 8	75 | TUBE	Yes	NIPDAU	Level-3-260C-168 HR	-40 to 85	REF 02AU
REF02AU.A	Active	Production	SOIC (D) | 8	75 | TUBE	Yes	NIPDAU	Level-3-260C-168 HR	-40 to 85	REF 02AU
REF02AU/2K5	Active	Production	SOIC (D) | 8	2500 | LARGE T&R	Yes	NIPDAU	Level-3-260C-168 HR	-40 to 85	REF 02AU
REF02AU/2K5.A	Active	Production	SOIC (D) | 8	2500 | LARGE T&R	Yes	NIPDAU	Level-3-260C-168 HR	-40 to 85	REF 02AU
REF02BU	Active	Production	SOIC (D) | 8	75 | TUBE	Yes	NIPDAU	Level-3-260C-168 HR	-40 to 85	REF 02BU
REF02BU.A	Active	Production	SOIC (D) | 8	75 | TUBE	Yes	NIPDAU	Level-3-260C-168 HR	-40 to 85	REF 02BU
REF02BU/2K5	Active	Production	SOIC (D) | 8	2500 | LARGE T&R	Yes	NIPDAU	Level-3-260C-168 HR	-40 to 85	REF 02BU
REF02BU/2K5.A	Active	Production	SOIC (D) | 8	2500 | LARGE T&R	Yes	NIPDAU	Level-3-260C-168 HR	-40 to 85	REF 02BU

(1) **Status:** For more details on status, see our product life cycle.

(2) **Material type:** When designated, preproduction parts are prototypes/experimental devices, and are not yet approved or released for full production. Testing and final process, including without limitation quality assurance, reliability performance testing, and/or process qualification, may not yet be complete, and this item is subject to further changes or possible discontinuation. If available for ordering, purchases will be subject to an additional waiver at checkout, and are intended for early internal evaluation purposes only. These items are sold without warranties of any kind.

(3) **RoHS values:** Yes, No, RoHS Exempt. See the TI RoHS Statement for additional information and value definition.

(4) **Lead finish/Ball material:** Parts may have multiple material finish options. Finish options are separated by a vertical ruled line. Lead finish/Ball material values may wrap to two lines if the finish value exceeds the maximum column width.

(5) **MSL rating/Peak reflow:** The moisture sensitivity level ratings and peak solder (reflow) temperatures. In the event that a part has multiple moisture sensitivity ratings, only the lowest level per JEDEC standards is shown. Refer to the shipping label for the actual reflow temperature that will be used to mount the part to the printed circuit board.

(6) **Part marking:** There may be an additional marking, which relates to the logo, the lot trace code information, or the environmental category of the part.

Multiple part markings will be inside parentheses. Only one part marking contained in parentheses and separated by a "~" will appear on a part. If a line is indented then it is a continuation of the previous line and the two combined represent the entire part marking for that device.

Important Information and Disclaimer: The information provided on this page represents TI's knowledge and belief as of the date that it is provided. TI bases its knowledge and belief on information provided by third parties, and makes no representation or warranty as to the accuracy of such information. Efforts are underway to better integrate information from third parties. TI has taken and continues to take reasonable steps to provide representative and accurate information but may not have conducted destructive testing or chemical analysis on incoming materials and chemicals. TI and TI suppliers consider certain information to be proprietary, and thus CAS numbers and other limited information may not be available for release.

In no event shall TI's liability arising out of such information exceed the total purchase price of the TI part(s) at issue in this document sold by TI to Customer on an annual basis.

TAPE AND REEL INFORMATION

REEL DIMENSIONS

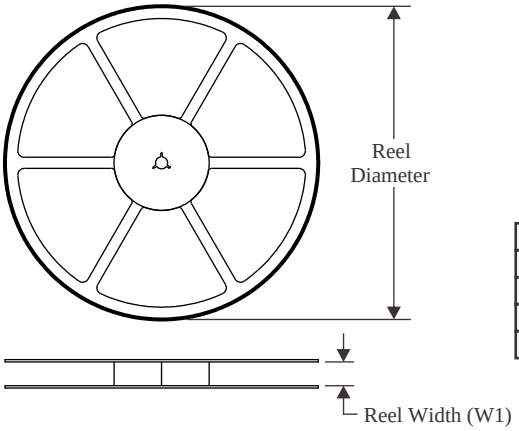

TAPE DIMENSIONS

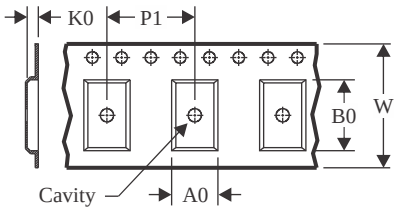

A0	Dimension designed to accommodate the component width
B0	Dimension designed to accommodate the component length
K0	Dimension designed to accommodate the component thickness
W	Overall width of the carrier tape
P1	Pitch between successive cavity centers

QUADRANT ASSIGNMENTS FOR PIN 1 ORIENTATION IN TAPE

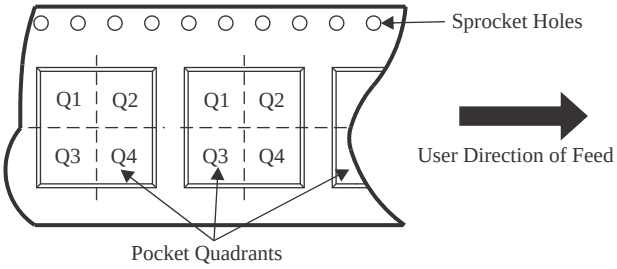

*All dimensions are nominal

Device	Package Type	Package Drawing	Pins	SPQ	Reel Diameter (mm)	Reel Width W1 (mm)	A0 (mm)	B0 (mm)	K0 (mm)	P1 (mm)	W (mm)	Pin1 Quadrant
REF02AU/2K5	SOIC	D	8	2500	330.0	12.4	6.4	5.2	2.1	8.0	12.0	Q1
REF02BU/2K5	SOIC	D	8	2500	330.0	12.4	6.4	5.2	2.1	8.0	12.0	Q1

TAPE AND REEL BOX DIMENSIONS

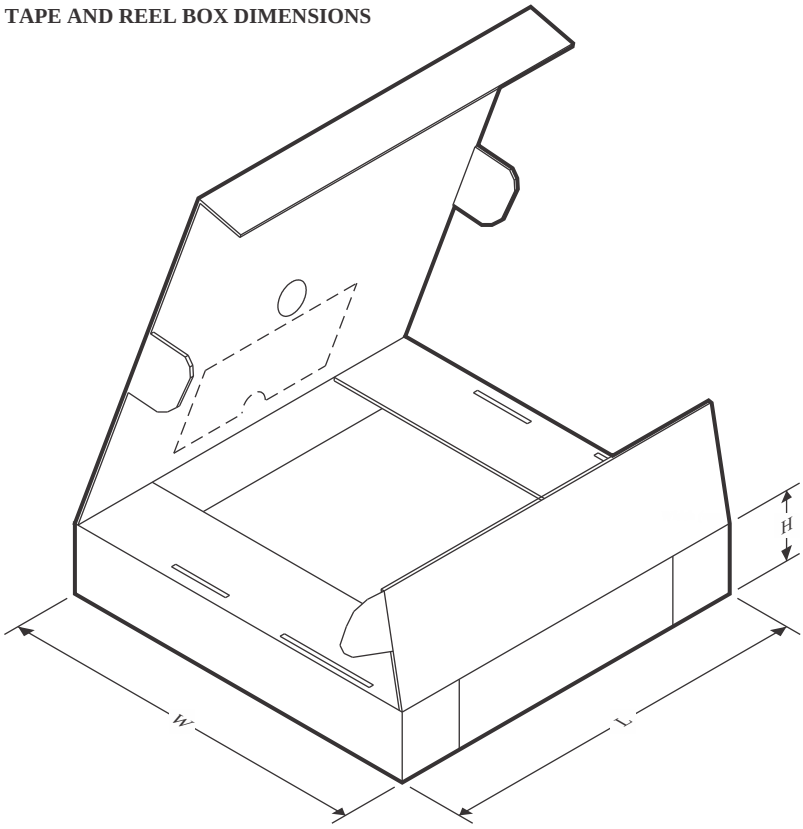

*All dimensions are nominal

Device	Package Type	Package Drawing	Pins	SPQ	Length (mm)	Width (mm)	Height (mm)
REF02AU/2K5	SOIC	D	8	2500	353.0	353.0	32.0
REF02BU/2K5	SOIC	D	8	2500	353.0	353.0	32.0

TUBE

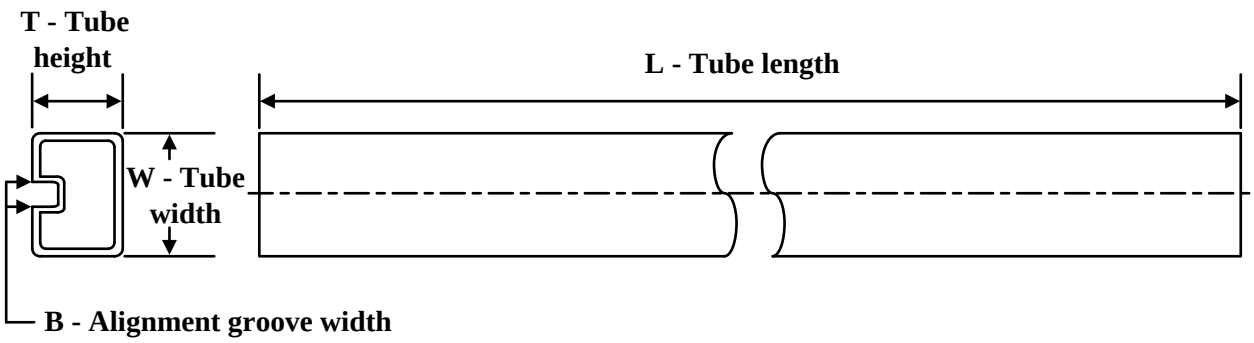

*All dimensions are nominal

Device	Package Name	Package Type	Pins	SPQ	L (mm)	W (mm)	T (µm)	B (mm)
REF02AU	D	SOIC	8	75	506.6	8	3940	4.32
REF02AU.A	D	SOIC	8	75	506.6	8	3940	4.32
REF02BU	D	SOIC	8	75	506.6	8	3940	4.32
REF02BU.A	D	SOIC	8	75	506.6	8	3940	4.32

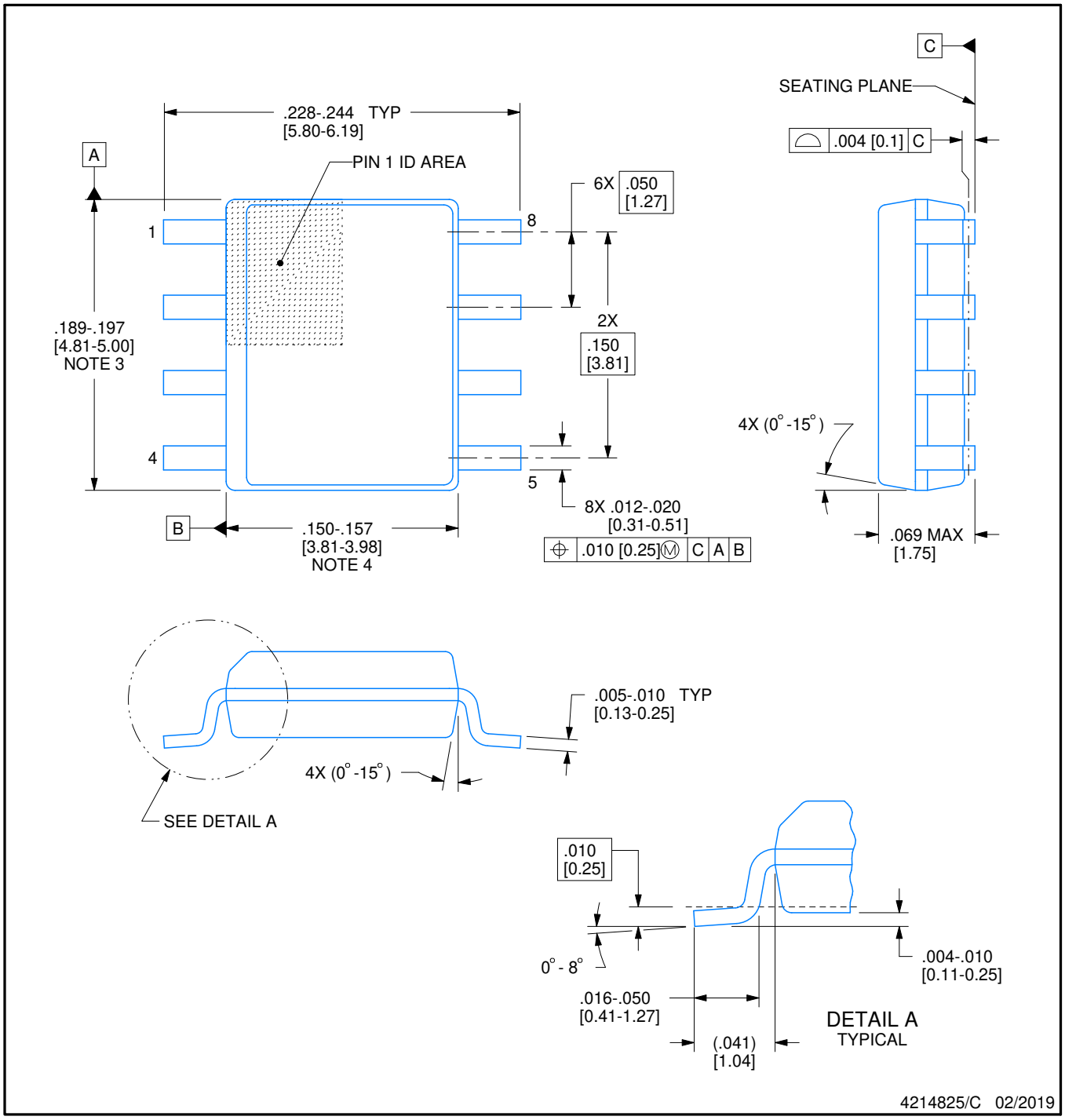

NOTES:

1. Linear dimensions are in inches [millimeters]. Dimensions in parenthesis are for reference only. Controlling dimensions are in inches. Dimensioning and tolerancing per ASME Y14.5M.
2. This drawing is subject to change without notice.
3. This dimension does not include mold flash, protrusions, or gate burrs. Mold flash, protrusions, or gate burrs shall not exceed .006 [0.15] per side.
4. This dimension does not include interlead flash.
5. Reference JEDEC registration MS-012, variation AA.

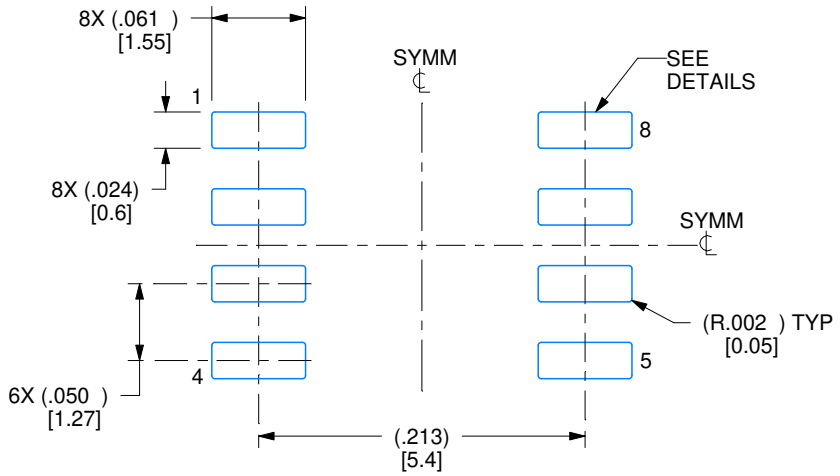

LAND PATTERN EXAMPLE
EXPOSED METAL SHOWN
SCALE:8X

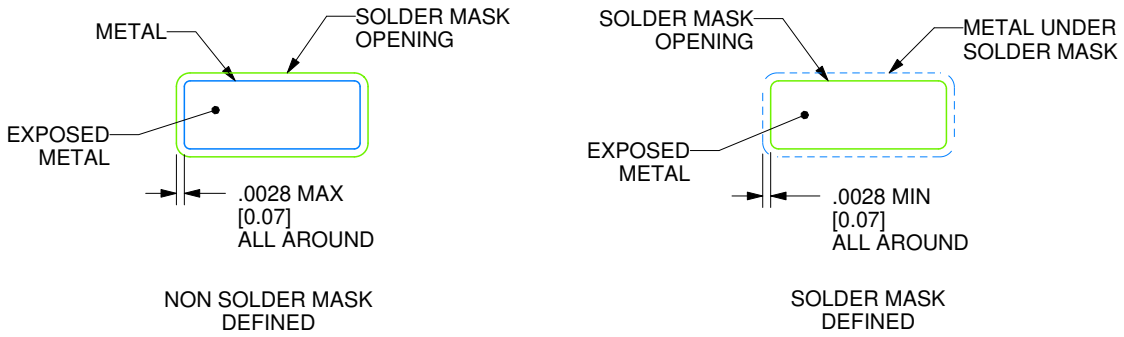

SOLDER MASK DETAILS

4214825/C 02/2019

NOTES: (continued)

6. Publication IPC-7351 may have alternate designs.
7. Solder mask tolerances between and around signal pads can vary based on board fabrication site.

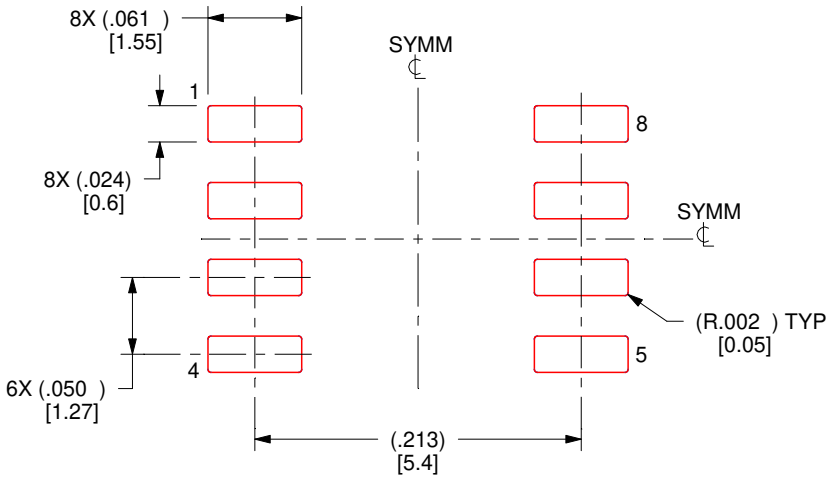

SOLDER PASTE EXAMPLE
BASED ON .005 INCH [0.125 MM] THICK STENCIL
SCALE:8X

4214825/C 02/2019

NOTES: (continued)

8. Laser cutting apertures with trapezoidal walls and rounded corners may offer better paste release. IPC-7525 may have alternate design recommendations.
9. Board assembly site may have different recommendations for stencil design.

IMPORTANT NOTICE AND DISCLAIMER

TI PROVIDES TECHNICAL AND RELIABILITY DATA (INCLUDING DATASHEETS), DESIGN RESOURCES (INCLUDING REFERENCE DESIGNS), APPLICATION OR OTHER DESIGN ADVICE, WEB TOOLS, SAFETY INFORMATION, AND OTHER RESOURCES “AS IS” AND WITH ALL FAULTS, AND DISCLAIMS ALL WARRANTIES, EXPRESS AND IMPLIED, INCLUDING WITHOUT LIMITATION ANY IMPLIED WARRANTIES OF MERCHANTABILITY, FITNESS FOR A PARTICULAR PURPOSE OR NON-INFRINGEMENT OF THIRD PARTY INTELLECTUAL PROPERTY RIGHTS.

These resources are intended for skilled developers designing with TI products. You are solely responsible for (1) selecting the appropriate TI products for your application, (2) designing, validating and testing your application, and (3) ensuring your application meets applicable standards, and any other safety, security, regulatory or other requirements.

These resources are subject to change without notice. TI grants you permission to use these resources only for development of an application that uses the TI products described in the resource. Other reproduction and display of these resources is prohibited. No license is granted to any other TI intellectual property right or to any third party intellectual property right. TI disclaims responsibility for, and you fully indemnify TI and its representatives against any claims, damages, costs, losses, and liabilities arising out of your use of these resources.

TI’s products are provided subject to TI’s Terms of Sale, TI’s General Quality Guidelines, or other applicable terms available either on ti.com or provided in conjunction with such TI products. TI’s provision of these resources does not expand or otherwise alter TI’s applicable warranties or warranty disclaimers for TI products. Unless TI explicitly designates a product as custom or customer-specified, TI products are standard, catalog, general purpose devices.

TI objects to and rejects any additional or different terms you may propose.

Copyright © 2026, Texas Instruments Incorporated

Last updated 10/2025