1 Scope

The present specifications shall apply to an RF1B.

2 Outline

Type	Silicon Diode
Structure	Resin Molded
Applications	High Frequency Rectification

3 Flammability

UL94V-0(Equivalent)

4 Absolute maximum ratings

No.	Item	Symbol	Unit	Rating	Conditions
1	Transient Peak Reverse Voltage	V_{RSM}	V	850	
2	Peak Reverse Voltage	V_{RM}	V	800	
3	Average Forward Current	$I_{F(AV)}$	A	0.6	Refer to derating curve in Section 7
4	Peak Surge Forward Current	I_{FSM}	A	15	10ms. Half sine wave, one shot
5	I^2t Limiting Value	I^2t	A^2s	1.125	1 ms ≤ t ≤ 10 ms
6	Junction Temperature	T_j	°C	-40 to +150	
7	Storage Temperature	T_{stg}	°C	-40 to +150	

5 Electrical characteristics (Ta=25°C , unless otherwise specified)

No.	Item	ymbol	Unit	Value	Conditions
1	Forward Voltage Drop	V_F	V	2.0 max.	I_F=1.0A
2	Reverse Leakage Current	I_R	μA	10 max.	$V_R=V_{RM}$
3	Reverse Leakage Current Under High Temperature	$H \cdot I_R$	μA	200 max.	$V_R=V_{RM}$, T_j=100°C
4	Reverse Recovery Time	trr-1	ns	400 max.	$I_F=I_{RP}$=10mA 90% Recovery point, T_j=25°C
		trr-2	ns	180 max.	I_F=10mA,I_{RP}=20mA 75% Recovery point ,T_j=25°C
5	Thermal Resistance	$R_{th(j-l)}$	°C /W	15 max.	Between Junction and Lead

Not Recommended for New Designs

6 V_F test and test circuit

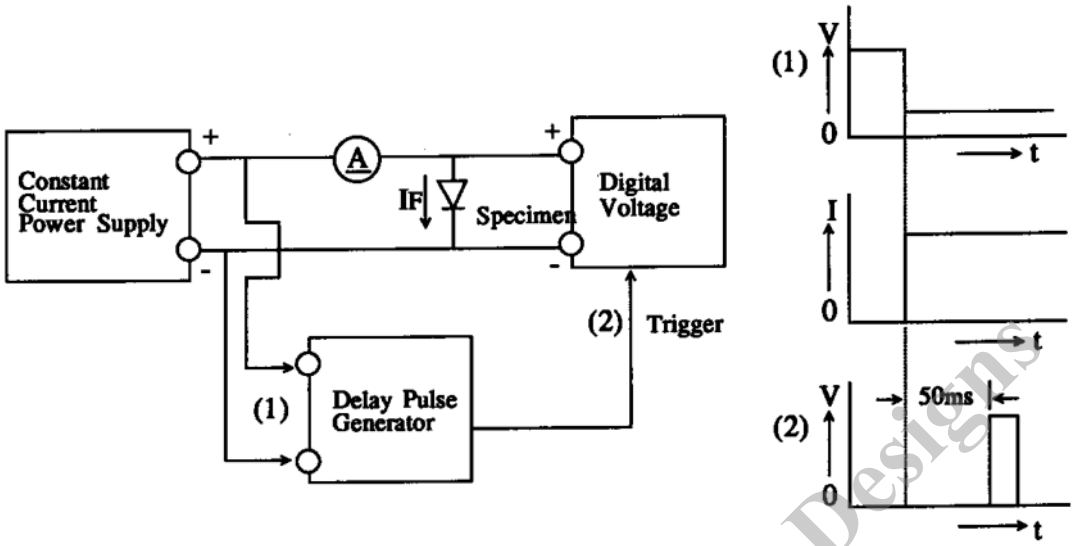

7 Derating

Derating to the ambient temperature.
Power loss generated by voltage is not taken into consideration.

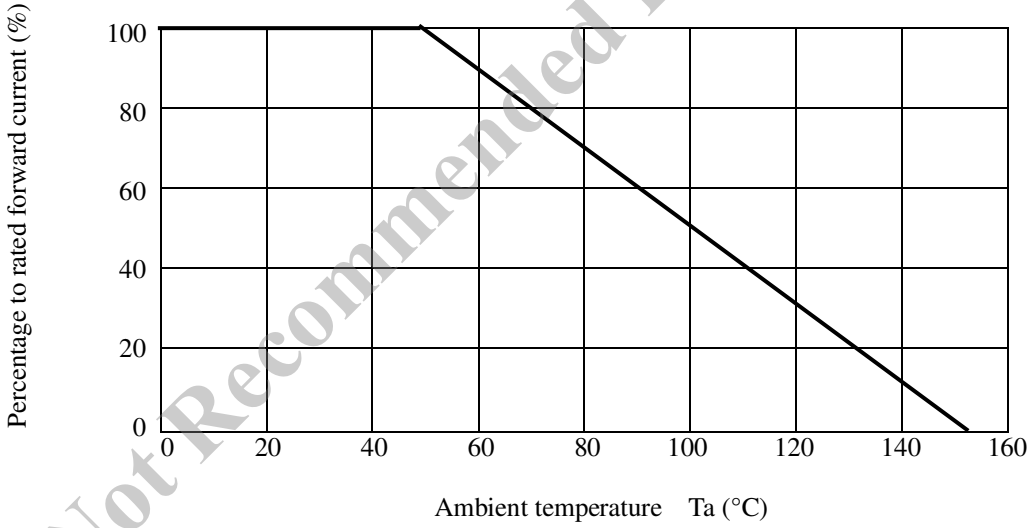

Not Recommended for New Designs

8 Package information

8-1Package type, physical dimensions and material

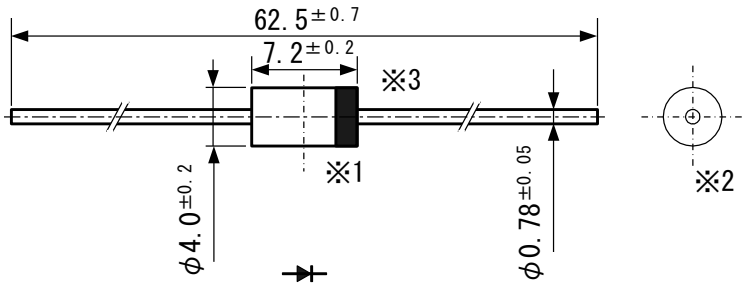

Dimensions in mm

*1 The allowance position of Body against the center of whole lead wire is 0.5mm(max.)
*2 The centric allowance of lead wire against center of physical body is 0.3mm(max.)
*3 The burr may exit up to 2mm from the body of lead

8-2Appearance

The body shall be clean and shall not bear any stain, rust or flaw.

8-3Marking

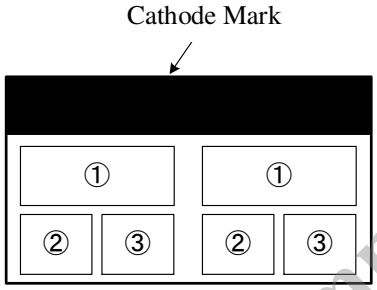

① Type number : RF1B
② Lot number 1
First digit: Last digit of Year
Second digit: Month
From 1 to 9 for Jan. to Sep.
O for Oct., N for Nov., and D for Dec.
③ Lot number 2 (ten days)
・ Top of the month
・・ Middle of month
・・・ End of month

The color of marking must be white.

Not Recommended for New Designs